TECHNICAL SUPPORT DOCUMENT

AND STATEMENT OF BASIS

FOR CONSTRUCTION OF

ARIZONA CLEAN FUELS YUMA, LLC

PETROLEUM REFINERY

Permit Number 1001205

August 30, 2004

draft

TABLE OF CONTENTS

I. INTRODUCTION . . . . . Page 1 of 449
- A. Company Information . . . . . Page 1 of 449
- B. Attainment Classification . . . . . Page 1 of 449

II. PROCESS DESCRIPTION . . . . . Page 1 of 449
- A. Crude Distillation Unit . . . . . Page 4 of 449
- B. Gas Concentration Plant . . . . . Page 4 of 449
- C. Hydrocracker Unit . . . . . Page 5 of 449
- D. Naphtha Hydrotreater Unit . . . . . Page 6 of 449
- E. Catalytic Reforming Unit . . . . . Page 7 of 449
- F. Isomerization Unit . . . . . Page 7 of 449
- G. Distillate Hydrotreater Unit . . . . . Page 8 of 449
- H. Butane Conversion Unit . . . . . Page 9 of 449
- I. Benzene Reduction Unit . . . . . Page 10 of 449
- J. Delayed Coking Unit . . . . . Page 10 of 449
- K. Petroleum Coke Storage, Handling, and Loading . . . . . Page 11 of 449
- L. Amine Regeneration Unit . . . . . Page 11 of 449
- M. Sour Water Stripper . . . . . Page 12 of 449
- N. Sulfur Recovery Plant . . . . . Page 12 of 449
- O. Hydrogen Plant . . . . . Page 14 of 449
- P. Group "A" Storage Tanks . . . . . Page 14 of 449
- Q. Group "B" Storage Tanks . . . . . Page 14 of 449
- R. Group "C" Storage Tanks . . . . . Page 15 of 449
- S. Group "D" Storage Tanks . . . . . Page 15 of 449
- T. Group "E" Storage Tank . . . . . Page 15 of 449
- U. Truck and Rail Car Loading Racks . . . . . Page 15 of 449
- V. Benzene Waste Operation . . . . . Page 15 of 449
- W. Wastewater Treatment Plant . . . . . Page 16 of 449
- X. Equipment Leaks . . . . . Page 18 of 449
- Y. Emergency Flares . . . . . Page 18 of 449
- Z. Steam Boilers . . . . . Page 18 of 449
- AA. Cooling Tower . . . . . Page 19 of 449
- BB. Internal Combustion Engines . . . . . Page 19 of 449
- CC. Mobile Sources and Fugitive Dust Sources . . . . . Page 19 of 449

III. EMISSIONS . . . . . Page 20 of 449
- A. General . . . . . Page 20 of 449
- B. Process Heaters . . . . . Page 25 of 449
- C. Boilers . . . . . Page 31 of 449
- D. Sulfur Recovery Plant . . . . . Page 33 of 449
- E. Group "B" Storage Tanks and Tank Farm Thermal Oxidizer . . . . . Page 35 of 449
- F. Wastewater Treatment Plant . . . . . Page 42 of 449
- G. Truck and Rail Car Loading Racks . . . . . Page 45 of 449
- H. Group "C" Storage Tanks . . . . . Page 49 of 449

draft

I. Sour Water Tank . . . . . Page 52 of 449
J. Emergency Flares . . . . . Page 54 of 449
K. Coke Silo Baghouse . . . . . Page 56 of 449
L. Spray Dryer Baghouse . . . . . Page 57 of 449
M. Catalyst Regenerators . . . . . Page 58 of 449
N. Cooling Tower . . . . . Page 61 of 449
O. Equipment Leaks . . . . . Page 64 of 449
P. Internal Combustion Engines . . . . . Page 130 of 449
Q. Vehicle Traffic on Paved Areas . . . . . Page 132 of 449
IV. REGULATORY APPLICABILITY . . . . . Page 134 of 449
A. Permit Regulations . . . . . Page 134 of 449
1. Class I Permit . . . . . Page 134 of 449
2. Nonattainment New Source Review . . . . . Page 134 of 449
3. Prevention of Significant Deterioration . . . . . Page 134 of 449
B. New Source Performance Standards (NSPS) . . . . . Page 135 of 449
1. 40 CFR 60 Subpart A, General Provisions . . . . . Page 135 of 449
2. 40 CFR 60 Subpart D, Fossil-Fuel-Fired Steam Generators . . . . . Page 135 of 449
3. 40 CFR 60 Subpart Da, Electric Utility Steam Generating Units . . . . . Page 136 of 449
4. 40 CFR 60 Subpart Db, Industrial-Commercial-Institutional Steam Generating Units . . . . . Page 136 of 449
5. 40 CFR 60 Subpart Dc, Small Industrial-Commercial-Institutional Steam Generating Units . . . . . Page 136 of 449
6. 40 CFR 60 Subpart J, Petroleum Refineries . . . . . Page 136 of 449
7. 40 CFR 60 Subpart Kb, Volatile Organic Liquid Storage Vessels . . . . . Page 137 of 449
8. 40 CFR 60 Subpart UU, Asphalt Processing . . . . . Page 138 of 449
9. 40 CFR 60 Subpart VV, Synthetic Organic Chemicals Manufacturing Industry (SOCMI) Equipment Leaks . . . . . Page 138 of 449
10. 40 CFR 60 Subpart XX, Bulk Gasoline Terminals . . . Page 139 of 449
11. 40 CFR 60 Subpart GGG, Equipment Leaks of VOC in Petroleum Refineries . . . . . Page 139 of 449
12. 40 CFR 60 Subpart NNN, VOC Emissions from SOCMI Distillation Operations . . . . . Page 139 of 449
13. 40 CFR 60 Subpart QQQ, VOC Emissions from Petroleum Refinery Wastewater Systems . . . . . Page 140 of 449
14. 40 CFR 60 Subpart RRR, VOC Emissions from SOCMI Reactor Processes . . . . . Page 140 of 449
C. National Emission Standards for Hazardous Air Pollutants (NESHAP) . . . . . Page 141 of 449
1. 40 CFR 61 Subpart A, General Provisions . . . . . Page 141 of 449
2. 40 CFR 61 Subpart FF, Benzene Waste Operations . Page 141 of 449
3. 40 CFR 63 Subpart A, General Provisions . . . . . Page 142 of 449
4. 40 CFR 63 Subpart B, Control Technology Determinations for Major

Draft

Sources in Accordance with Clean Air Act §§ 112(g) and 112(j) . . . . . Page 142 of 449
5. 40 CFR 63 Subparts F and G, SOCMI Process Units . . . . . Page 143 of 449
6. 40 CFR 63 Subpart H, Equipment Leaks . . . . . Page 143 of 449
7. 40 CFR 63 Subpart R, Gasoline Distribution Facilities . . . . . Page 144 of 449
8. 40 CFR 63 Subpart CC, Petroleum Refineries . . . . . Page 144 of 449
9. 40 CFR 63 Subpart UUU, Petroleum Refinery Catalytic Cracking Units, Catalytic Reforming Units, and Sulfur Recovery Units . . . . . Page 147 of 449
10. 40 CFR 63 Subpart EEEE, Organic Liquids Distribution (Non-Gasoline) . . . . . Page 148 of 449
11. 40 CFR 63 Subpart ZZZZ, Stationary Reciprocating Internal Combustion Engines . . . . . Page 148 of 449
12. 40 CFR 63 Subpart DDDDD, Industrial Boilers and Process Heaters . . . . . Page 148 of 449
D. Arizona Administrative Code . . . . . Page 149 of 449
1. A.A.C. R18-2-602, Open Burning . . . . . Page 149 of 449
2. A.A.C. R18-2-604, Open Areas, Dry Washes, or Riverbeds . . . . . Page 149 of 449
3. A.A.C. R18-2-605, Roadways and Streets . . . . . Page 149 of 449
4. A.A.C. R18-2-606, Material Handling . . . . . Page 149 of 449
5. A.A.C. R18-2-607, Storage Piles . . . . . Page 149 of 449
6. A.A.C. R18-2-612, Opacity of Emissions from Nonpoint Sources . . . . . Page 149 of 449
7. A.A.C. R18-2-702, General Provisions for Existing Point Sources . . . . . Page 150 of 449
8. A.A.C. R18-2-703, Steam Generators and Fuel-Burning Equipment . . . . . Page 150 of 449
9. A.A.C. R18-2-704, Incinerators . . . . . Page 150 of 449
10. A.A.C. R18-2-709, Petroleum Refineries . . . . . Page 150 of 449
11. A.A.C. R18-2-710, Petroleum Liquid Storage Vessels . . . . . Page 151 of 449
12. A.A.C. R18-2-719, Stationary Rotating Machinery . . Page 151 of 449
13. A.A.C. R18-2-724, Fossil-fuel Fired Equipment . . . . . Page 151 of 449
14. A.A.C. R18-2-726, Sandblasting Operations . . . . . Page 151 of 449
15. A.A.C. R18-2-727, Spray Painting Operations . . . . . Page 152 of 449
16. A.A.C. R18-2-730, Unclassified Sources . . . . . Page 152 of 449
17. A.A.C. R18-2-801, General Provisions for Mobile Sources . . . . . Page 152 of 449
18. A.A.C. R18-2-802, Off-Road Machinery . . . . . Page 152 of 449
19. A.A.C. R18-2-804, Roadway and Site-Cleaning Machinery . . . . . Page 152 of 449
20. Article 9, New Source Performance Standards . . . . . Page 152 of 449

draft

21. Article 11, Federal Hazardous Air Pollutants . . . . . Page 153 of 449
E. Compliance Assurance Monitoring . . . . . Page 153 of 449
V. CONTROL TECHNOLOGY ANALYSES . . . . . Page 155 of 449
A. General . . . . . Page 155 of 449
1. Best Available Control Technology . . . . . Page 155 of 449
2. Maximum Achievable Control Technology . . . . . Page 158 of 449
B. Boilers and Process Heaters . . . . . Page 158 of 449
1. BACT for Particulate Matter . . . . . Page 158 of 449
2. BACT for Sulfur Dioxide . . . . . Page 159 of 449
3. BACT for Nitrogen Oxides . . . . . Page 161 of 449
4. BACT for Carbon Monoxide . . . . . Page 170 of 449
5. BACT for Volatile Organic Compounds . . . . . Page 171 of 449
C. Sulfur Recovery Units . . . . . Page 171 of 449
1. BACT for Sulfur Dioxide . . . . . Page 173 of 449
2. BACT for Reduced Sulfur Compounds . . . . . Page 179 of 449
3. BACT for Nitrogen Oxides . . . . . Page 180 of 449
D. BACT for Sulfur Pits . . . . . Page 181 of 449
E. BACT for Sulfur Loading . . . . . Page 182 of 449
F. BACT for Storage Tanks . . . . . Page 182 of 449
1. Volatile Organic Compounds . . . . . Page 183 of 449
2. BACT for Particulate Matter . . . . . Page 190 of 449
G. BACT for Loading Racks . . . . . Page 190 of 449
H. Wastewater Treatment Plant . . . . . Page 193 of 449
1. BACT for Particulate Matter . . . . . Page 193 of 449
2. BACT for Volatile Organic Compounds . . . . . Page 194 of 449
I. Equipment Leaks . . . . . Page 195 of 449
1. BACT for Volatile Organic Compounds . . . . . Page 195 of 449
2. BACT for Hydrogen Sulfide . . . . . Page 203 of 449
J. Catalyst Regenerators . . . . . Page 205 of 449
K. Petroleum Coke Storage and Handling . . . . . Page 206 of 449
L. Cooling Tower . . . . . Page 207 of 449
1. BACT for Particulate Matter . . . . . Page 208 of 449
2. BACT for Volatile Organic Compounds . . . . . Page 209 of 449
M. Internal Combustion Engines . . . . . Page 210 of 449
1. BACT for Sulfur Dioxide . . . . . Page 211 of 449
2. BACT for Nitrogen Oxides . . . . . Page 212 of 449
3. BACT for Carbon Monoxide . . . . . Page 215 of 449
N. Emergency Flares . . . . . Page 218 of 449
O. Miscellaneous Fugitive Dust Sources . . . . . Page 219 of 449
VI. EMISSION LIMITS, TESTING, MONITORING, RECORDKEEPING, AND REPORTING . . . . . Page 220 of 449
A. Crude Unit (Attachment "B" Section I) . . . . . Page 275 of 449
1. Fuel Use in the Process Heaters . . . . . Page 275 of 449
2. SO_2 Emissions from the Process Heaters . . . . . Page 275 of 449
3. NO_X Emissions from the Process Heaters . . . . . Page 276 of 449

Draft

4. CO Emissions from the Process Heaters . . . . . Page 276 of 449
5. PM_{10} Emissions from the Process Heaters . . . . . Page 276 of 449
6. Organic HAP Emissions from the Process Heaters . . Page 276 of 449
7. Ammonia Emissions from the Atmospheric Crude Charge Heater . . . . . Page 276 of 449
8. Equipment in VOC, Organic HAP, and Hydrogen Sulfide Service . . . . . Page 277 of 449
B. Gas Concentration Plant (Attachment "B" Section II) . . . . . Page 277 of 449
1. NSPS Provisions for the Distillation Processes . . . . . Page 277 of 449
2. Equipment in VOC, Organic HAP, and Hydrogen Sulfide Service . . . . . Page 278 of 449
C. Hydrocracker Unit (Attachment "B" Section III) . . . . . Page 278 of 449
1. Process Heaters . . . . . Page 278 of 449
2. Equipment in VOC, Organic HAP, and Hydrogen Sulfide Service . . . . . Page 278 of 449
D. Naphtha Hydrotreater Unit (Attachment "B" Section IV) . . Page 278 of 449
1. Process Heaters . . . . . Page 278 of 449
2. Equipment in VOC, Organic HAP, and Hydrogen Sulfide Service . . . . . Page 278 of 449
E. Catalytic Reforming Unit (Attachment "B" Section V) . . . . . Page 279 of 449
1. NESHAP Provisions for the Catalyst Regenerator . . Page 279 of 449
2. Catalyst Regenerator Visible Emissions . . . . . Page 280 of 449
3. Catalyst Regenerator NO_X Emissions . . . . . Page 280 of 449
4. Catalyst Regenerator CO Emissions . . . . . Page 280 of 449
5. Process Heaters . . . . . Page 280 of 449
6. Equipment in VOC, Organic HAP, and Hydrogen Sulfide Service . . . . . Page 281 of 449
F. Isomerization Unit (Attachment "B" Section VI) . . . . . Page 281 of 449
G. Distillate Hydrotreater Unit (Attachment "B" Section VII) . . . . . Page 281 of 449
1. Process Heaters . . . . . Page 281 of 449
2. Equipment in VOC, Organic HAP, and Hydrogen Sulfide Service . . . . . Page 281 of 449
H. Butane Conversion Unit (Attachment "B" Section VIII) . . . . Page 282 of 449
1. NSPS Provisions for the Distillation Units . . . . . Page 282 of 449
2. NSPS Provisions for the Reactor Processes . . . . . Page 282 of 449
3. Catalyst Regenerator Visible Emissions . . . . . Page 282 of 449
4. Catalyst Regenerator NO_X Emissions . . . . . Page 283 of 449
5. Catalyst Regenerator CO Emissions . . . . . Page 283 of 449
6. Process Heaters . . . . . Page 283 of 449
7. Equipment in VOC, Organic HAP, and Hydrogen Sulfide Service . . . . . Page 283 of 449
I. Benzene Reduction Unit (Attachment "B" Section IX) . . . . . Page 283 of 449
J. Delayed Coking Unit (Attachment "B" Section X) . . . . . Page 284 of 449
1. Process Heaters . . . . . Page 284 of 449

Draft

2. Equipment in VOC, Organic HAP, and Hydrogen Sulfide Service . . . . . Page 284 of 449
K. Petroleum Coke Storage, Handling, and Loading (Attachment "B" Section XI) . . . . . Page 284 of 449
1. Prohibition of Visible Emissions . . . . . Page 284 of 449
2. Coke Moisture Content . . . . . Page 284 of 449
3. Coke Pit and Coke Pad Equipment Design . . . . . Page 284 of 449
4. Coke Crusher Equipment Design . . . . . Page 285 of 449
5. Coke Conveyor Equipment Design . . . . . Page 285 of 449
6. Coke Silo . . . . . Page 285 of 449
7. Coke Rail Car Loading . . . . . Page 285 of 449
L. Amine Regeneration Unit (Attachment "B" Section XII) . . . Page 285 of 449
1. Provisions for Minimizing Excess SO_2 Emissions . . . . Page 285 of 449
2. Monitoring Provisions for RFG Sulfur Content . . . . . Page 287 of 449
3. NESHAP Provisions for the Rich Amine Three Phase Separator . . . . . Page 287 of 449
4. Rich Amine and Lean Amine Tanks . . . . . Page 287 of 449
5. Equipment in VOC, Organic HAP, and Hydrogen Sulfide Service . . . . . Page 287 of 449
M. Sour Water Stripper (Attachment "B" Section XIII) . . . . . Page 288 of 449
1. Provisions for Minimizing Excess SO_2 Emissions . . . . Page 288 of 449
2. NESHAP Provisions for the Sour Water Flash Drum . . . . . Page 288 of 449
3. NSPS Provisions for Sour Water Tank . . . . . Page 289 of 449
4. H_2S Emission Standard for Sour Water Tank . . . . . Page 289 of 449
5. Equipment in VOC, Organic HAP, and Hydrogen Sulfide Service . . . . . Page 289 of 449
N. Sulfur Recovery Plant (Attachment "B" Section XIV) . . . . . Page 289 of 449
1. NSPS and NESHAP Provisions for SO_2 Emissions from the Thermal Oxidizer . . . . . Page 289 of 449
2. BACT Emission Limits for SO_2 and Reduced Sulfur Compounds from the Thermal Oxidizer . . . . . Page 290 of 449
3. BACT and NESHAP Provisions for VOC Emissions from the Thermal Oxidizer . . . . . Page 291 of 449
4. Thermal Oxidizer NO_X Emissions . . . . . Page 291 of 449
5. Thermal Oxidizer CO Emissions . . . . . Page 291 of 449
6. Sulfur Pits . . . . . Page 292 of 449
7. MDEA Tank . . . . . Page 292 of 449
8. Sulfur Product Truck and Rail Car Loading Racks . Page 292 of 449
9. Equipment in VOC, Organic HAP, and Hydrogen Sulfide Service . . . . . Page 292 of 449
O. Hydrogen Plant (Attachment "B" Section XV) . . . . . Page 292 of 449
1. Process Heater . . . . . Page 292 of 449
2. Equipment in VOC, Organic HAP, and Hydrogen Sulfide Service . . . . . Page 293 of 449

Draft

P. Group "A" Storage Tanks (Attachment "B" Section XVI) . . Page 293 of 449
1. VOC and HAP Provisions . . . . . Page 293 of 449
2. Equipment in VOC and Organic HAP Service . . . . . Page 294 of 449
Q. Group "B" Storage Tanks (Attachment "B" Section XVII) . . . . . Page 294 of 449
1. VOC and HAP Provisions . . . . . Page 294 of 449
2. Thermal Oxidizer Operational Limitations . . . . . Page 295 of 449
3. Thermal Oxidizer SO_2 Emissions . . . . . Page 296 of 449
4. Thermal Oxidizer PM_{10} Emissions . . . . . Page 296 of 449
5. Thermal Oxidizer NO_X Emissions . . . . . Page 297 of 449
6. Thermal Oxidizer CO Emissions . . . . . Page 297 of 449
7. Equipment in VOC and Organic HAP Service . . . . . Page 297 of 449
R. Group "C" Storage Tanks (Attachment "B" Section XVIII) . . . . . Page 297 of 449
1. VOC and HAP Provisions . . . . . Page 297 of 449
2. Equipment in VOC and Organic HAP Service . . . . . Page 298 of 449
S. Group "D" Storage Tanks (Attachment "B" Section XIX) . . Page 298 of 449
1. VOC and HAP Provisions . . . . . Page 298 of 449
2. Equipment in VOC and Organic HAP Service . . . . . Page 299 of 449
T. Group "E" Storage Tank (Attachment "B" Section XX) . . . Page 299 of 449
1. Visible Emissions . . . . . Page 299 of 449
2. VOC and HAP Provisions . . . . . Page 299 of 449
U. Truck and Rail Car Loading Racks (Attachment "B" Section XXI) . . . . . Page 300 of 449
1. VOC and HAP Provisions . . . . . Page 300 of 449
2. Thermal Oxidizer Operational Limitations . . . . . Page 302 of 449
3. Thermal Oxidizer SO_2 Emissions . . . . . Page 302 of 449
4. Equipment in VOC and Organic HAP Service . . . . . Page 302 of 449
V. Benzene Waste Operation (Attachment "B" Section XXII) . . . . . Page 303 of 449
1. Wastewater Collection System (Drains) . . . . . Page 303 of 449
2. Equalization Tank . . . . . Page 303 of 449
3. Oil-Water Separator (API Separator) . . . . . Page 304 of 449
4. Dissolved Air Flotation Unit . . . . . Page 304 of 449
5. Biotreater . . . . . Page 304 of 449
6. Wastewater Treatment Processes, Collectively . . . . . Page 304 of 449
W. Wastewater Treatment Plant (Attachment "B" Section XXIII) . . . . . Page 306 of 449
1. Operational Requirements for Wastewater Treatment Vessels . . . . . Page 306 of 449
2. Operational Requirements for the Thermal Oxidizer . . . . . Page 306 of 449
3. SO_2 Emissions from the Thermal Oxidizer . . . . . Page 308 of 449
4. Spray Dryer Heater . . . . . Page 308 of 449
5. Opacity and PM_{10} Emissions from the Spray Dryer Baghouse

draft

. . . . . Page 308 of 449
6. Equipment in VOC, Organic HAP, and Hydrogen Sulfide Service . . . . . Page 308 of 449
X. Equipment Leaks (Attachment "B" Section XXIV) . . . . . Page 309 of 449
1. Organization of Proposed Permit Conditions . . . . . Page 309 of 449
2. General Equipment Leak Provisions: VOC, Organic HAP, and H_2S Emissions . . . . . Page 309 of 449
3. Equipment-Specific Provisions: VOC and Organic HAP Emissions . . . . . Page 309 of 449
4. Equipment Leak Provisions for H_2S Emissions . . . . . Page 311 of 449
5. Equipment Leak Provisions for Benzene Emissions . Page 311 of 449
6. Recordkeeping and Reporting Requirements . . . . . Page 311 of 449
7. Testing Requirements . . . . . Page 312 of 449
Y. Emergency Flares (Attachment "B" Section XXV) . . . . . Page 312 of 449
1. Emergency Usage . . . . . Page 312 of 449
2. Equipment Design and Work Practice Requirements . . . . . Page 312 of 449
3. Testing Requirements . . . . . Page 312 of 449
Z. Steam Boilers (Attachment "B" Section XXVI) . . . . . Page 313 of 449
1. Fuel Use . . . . . Page 313 of 449
2. NO_X Emissions . . . . . Page 313 of 449
3. CO Emissions . . . . . Page 313 of 449
AA. Cooling Tower (Attachment "B" Section XXVII) . . . . . Page 313 of 449
1. Circulating Water Flow Rate . . . . . Page 313 of 449
2. Opacity of Visible Emissions . . . . . Page 313 of 449
3. Particulate Matter Emissions . . . . . Page 314 of 449
4. Heat Exchange System Operational Requirements . . Page 314 of 449
BB. Internal Combustion Engines (Attachment "B" Section XXVIII) . . . . . Page 314 of 449
1. Fuel Specification and Fuel Consumption Limitations . . . . . Page 314 of 449
2. NO_X, CO, and PM Emissions . . . . . Page 315 of 449
3. Visible Emissions . . . . . Page 315 of 449
CC. Mobile Sources and Fugitive Dust Sources (Attachment "B" Section XXIX) . . . . . Page 315 of 449
1. Visible Emissions . . . . . Page 315 of 449
2. Work Practices . . . . . Page 316 of 449
VIII. INSIGNIFICANT ACTIVITIES . . . . . Page 338 of 449
IX. ABBREVIATIONS AND ACRONYMS . . . . . Page 340 of 449
X. RESPONSES TO PRELIMINARY U.S. EPA COMMENTS . . . . . Page 343 of 449
A. Process Heater NO_X Emissions . . . . . Page 343 of 449
1. Heaters for which SCR is not Required . . . . . Page 343 of 449
2. Heaters for which SCR is Required . . . . . Page 364 of 449
B. Process Heater CO Emissions . . . . . Page 365 of 449
C. Process Heater PM Emissions . . . . . Page 367 of 449

draft

D. Steam Boilers . . . . . Page 369 of 449
E. Gas Concentration Plant . . . . . Page 371 of 449
F. Group "C" Storage Tanks . . . . . Page 372 of 449
G. Emergency Flares . . . . . Page 379 of 449
H. Thermal Oxidizers, Generally . . . . . Page 383 of 449
I. Sulfur Recovery Plant Thermal Oxidizer . . . . . Page 429 of 449
J. Tank Farm Thermal Oxidizer . . . . . Page 429 of 449
K. Wastewater Treatment Plant Thermal Oxidizer . . . . . Page 429 of 449
L. Sulfur Recovery Plant . . . . . Page 430 of 449
M. Sour Water Stripper . . . . . Page 431 of 449
N. Internal Combustion Engines . . . . . Page 433 of 449
O. Cooling Tower . . . . . Page 438 of 449
P. Reactors and Distillation Columns . . . . . Page 441 of 449
Q. Catalyst Regenerators . . . . . Page 442 of 449
R. Benzene Reduction Unit . . . . . Page 443 of 449
S. Equipment Leaks . . . . . Page 444 of 449
T. Petroleum Coke Storage, Handling, and Loading . . . . . Page 445 of 449

draft

I. INTRODUCTION

The proposed Class I / Title V Permit No. 1001205 is for the proposed Arizona Clean Fuels Yuma, LLC petroleum refinery, a major stationary source. The proposed refinery will be located on an approximately 1,450-acre site, 40 miles east of Yuma, near the town of Tacna, in Yuma County. The proposed refinery will have the capacity to refine approximately 150,000 barrels per day (BPD) (6.3 million gallons per day) of crude oil and natural gasoline. The primary products of the refinery would be gasoline, jet fuel, propane, and diesel fuel.

A. Company Information

Facility Name:	Arizona Clean Fuels Yuma, LLC
Mailing Address:	Old Highway 80 Tacna, Arizona 85352
Facility Location:	North of Interstate 8 between Avenues 44E and 46E Yuma County, Arizona

B. Attainment Classification (Source: 40 CFR §81.303)

The air quality control region in which the subject facility is located either is unclassified or is classified as being in attainment of the National Ambient Air Quality Standards (NAAQS) for all criteria pollutants: particulate matter less than 10 microns (PM_{10}), nitrogen dioxide (NO_2), sulfur oxides (SO_x), carbon monoxide (CO), lead (Pb), and ozone (O_3).

II. PROCESS DESCRIPTION

Arizona Clean Fuels Yuma, LLC (hereinafter, "Arizona Clean Fuels") is a proposed petroleum refinery that will operate under Standard Industrial Code (SIC) 2911. The facility will operate 24 hours a day and 365 days a year.

The proposed refinery will have the capacity to refine approximately 150,000 BPD (6.3 million gallons per day) of crude oil and natural gasoline. Additional raw materials for the refining process may include natural gas, propane, and butane. Other inputs include natural gas, for use as supplemental fuel within the refinery, and products such as alkylate and oxygenates, for blending into the gasoline produced at the refinery.

This proposed refinery will supply cleaner-burning gasolines and other fuels to the Arizona market. The product slate of the proposed refinery consists of regular and premium reformulated gasolines, regular and premium gasolines meeting the stringent specifications of the California Air Resource Board (CARB), liquified petroleum gas (LPG), aviation jet fuel, and diesel fuel. A sulfur recovery plant (SRP) will capture sulfur contained in the crude oil feedstock and produce liquid sulfur product. In addition, the proposed refinery configuration includes a Delayed Coker Unit for the production of petroleum coke, a solid

draft

by-product that can be sold as a fuel.

The design of the proposed refinery utilizes current technologies that incorporate means to reduce air emissions. Throughout the design process, air emission reduction measures have been included to meet or exceed stringent federal standards that apply only to new refineries. Per unit of product, the planned refinery will have lower emissions of criteria pollutants than comparable older, existing refineries. The pollution control measures, including extensive monitoring and record keeping to be implemented at the facility are described in this technical support document.

This project represents the first facility in the western United States to be built specifically for the production of newer clean fuels. Several specialized commercial technologies are to be incorporated in the refinery process units to reduce fuel aromatics and sulfur, which in turn reduces emissions from vehicles. Because the proposed refinery has been designed specifically for the production of such fuels, it offers an economic source for the Arizona market of fuels meeting current and projected clean fuel specifications.

The proposed refinery will include numerous process units. These process units, and their interconnections within the facility, are shown in Figure II-A. The major process units include a Crude Distillation Unit, a Delayed Coking Unit, a Hydrocracker Unit, a Naphtha Hydrotreater Unit, a Distillate Hydrotreater Unit, a Catalytic Reforming Unit, a Butane Conversion Unit, a Benzene Reduction Unit, and an Isomerization Unit. Supporting process units include a Gas Concentration Plant, a Hydrogen Plant, a Sulfur Recovery Plant, an Amine Regeneration Unit, a Sour Water Stripper, and a Wastewater Treatment Plant.

draft

FIGURE II-A. SIMPLIFIED REFINERY PROCESS FLOW DIAGRAM

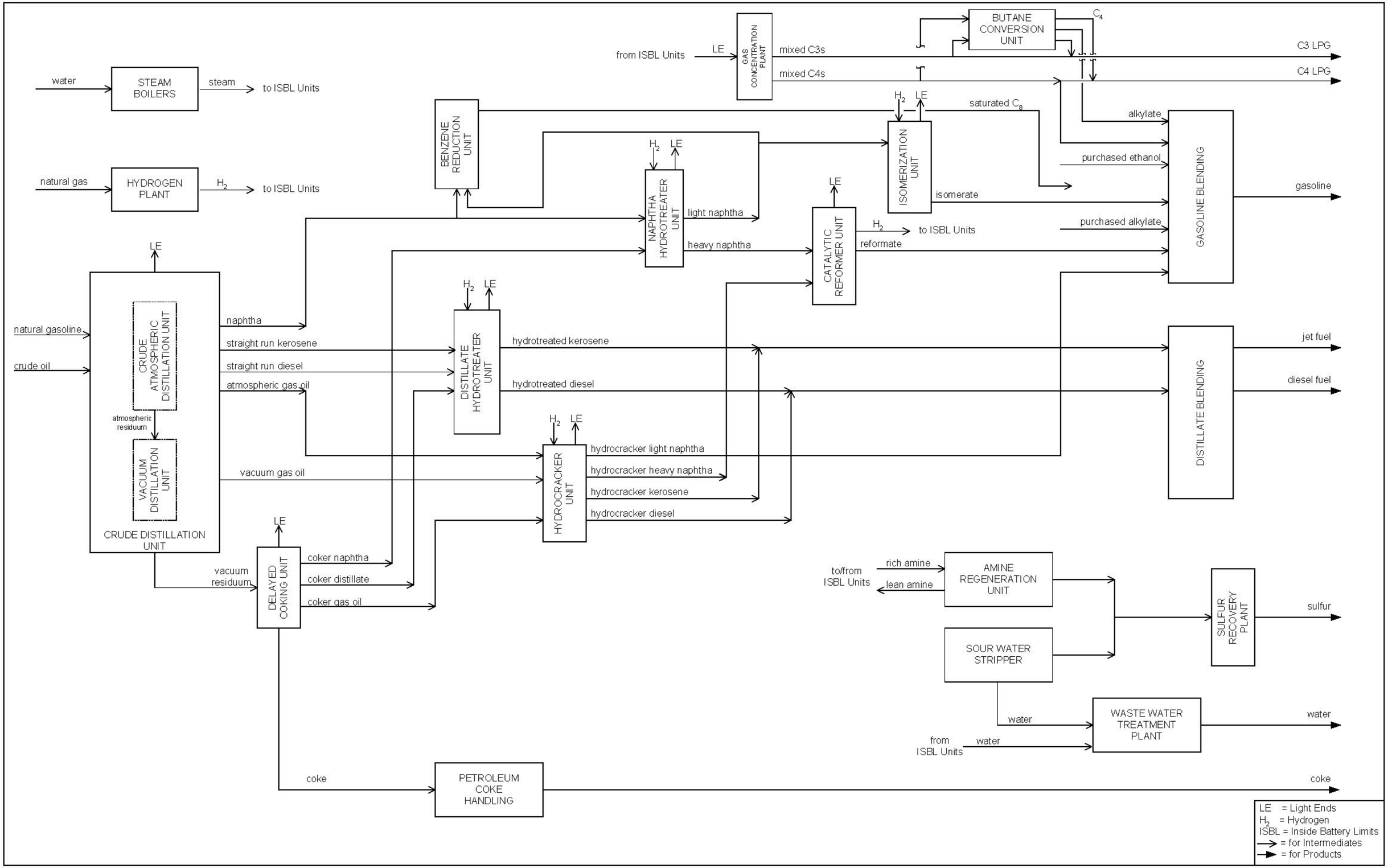

Each of these process units comprises several distinct components such as distillation columns, reactors, fired heaters, heat exchangers, pumps, and compressors to achieve specific refining objectives. The capacities of these process units are presented in subsequent sections of this document.

A. Crude Distillation Unit

The function of the Crude Distillation Unit is to provide primary separation of the crude oil and natural gasoline feedstocks for subsequent processing by downstream units. The charge capacity of this unit is 142,000 BPD of crude oil and 10,000 BPD of natural gasoline.

Crude oil and natural gasoline are preheated by exchange with hot products, passed through an Electrostatic Desalter to remove entrained brine, and are heated further in the Atmospheric Crude Charge Heater. The heated feed is then routed to the Atmospheric Crude Distillation Column, where it is separated into five liquid products at approximately atmospheric pressure. The lightest (i.e., lowest boiling point) product is naphtha, which is processed in a Naphtha Stabilizer to remove light hydrocarbons. This yields a stabilized naphtha with a vapor pressure low enough for safe storage. The light hydrocarbons in the overhead streams from the Naphtha Stabilizer and the Atmospheric Crude Distillation Column are sent to the Gas Concentration Plant for recovery. Kerosene, diesel, and atmospheric gas oil (AGO) liquid products from the Atmospheric Crude Distillation Column are steam stripped to control flash point. Condensed stripping steam (including a small quantity of hydrogen sulfide) is recovered in the column overhead system and is sent to the sour water collection system. Atmospheric residuum is the remaining liquid fraction and is composed of predominantly high boiling point components. This material is withdrawn from the bottom of the Atmospheric Crude Distillation Column.

The atmospheric residuum from the Atmospheric Crude Distillation Column is heated in the Vacuum Crude Charge Heater, where it is partially vaporized. The two-phase feed then enters the flash zone of the Vacuum Crude Distillation Column where it is distilled under vacuum conditions to prevent thermal decomposition. Light and heavy vacuum gas oil (LVGO and HVGO) are produced as liquid products. Vacuum residuum is the remaining liquid fraction and is withdrawn from the bottom of the column. This vacuum residuum material can be used as feed material in the Delayed Coking Unit or can be sold as asphalt. Condensed stripping steam (including a small quantity of hydrogen sulfide) is recovered in the column overhead system and is sent to the sour water collection system.

Products of the Crude Distillation Unit and the Vacuum Unit are referred to as "straight-run" products because they have not yet been subjected to either thermal or catalytic conversion processes.

B. Gas Concentration Plant

Light ends (i.e., gaseous, low boiling-point hydrocarbon streams) are produced as by-products from several process units at the proposed refinery. These light ends are routed to the Gas Concentration Plant, where propane and butane are recovered as finished products. Ethane and lighter hydrocarbons are treated to produce a gas stream suitable for use as refinery fuel. Pentane and heavier components are recycled to the Crude Distillation Unit for recovery as naphtha. The nominal design capacity of the Gas Concentration Plant is 13,000 BPD of propane and butane products.

The primary sources of light ends fed to the Gas Concentration Plant include:

- Overhead vapor from the Crude Distillation Unit and its Naphtha Stabilizer;
- Offgas or purge streams from the Naphtha Hydrotreater Unit, Distillate Hydrotreater Unit, and Hydrocracker Unit;
- Hydrocarbon gas produced as the result of thermal cracking at the Crude Distillation Unit and Delayed Coking Unit; and
- Debutanizer overhead products from the Catalytic Reforming Unit and Hydrocracker Unit.

Sulfur in the form of hydrogen sulfide (H_2S) is removed from the feed streams by counter-current absorption with an aqueous amine solution in three contactor columns. The H_2S-rich amine is sent to the Amine Regeneration Unit for regeneration and returned to the gas plant as lean amine. Sulfur in the form of mercaptans is removed from the propane and butane products by reaction with caustic soda in the Caustic Treater Unit. The mercaptan sulfur leaves the refinery as a solute in the spent caustic.

The fractionation objectives are achieved in three steam-reboiled columns operating in series: the De-ethanizer, Depropanizer, and Debutanizer. There are no fired heaters in the Gas Concentration Plant.

C. Hydrocracker Unit

The Hydrocracker Unit processes gas oil, primarily from the Crude Distillation Unit and the Delayed Coking Unit, to convert it into gasoline, jet, and diesel blendstocks. The nominal design charge capacity of this unit is 40,000 BPD of gas oil.

The gas oil feed streams are mixed with recycle and make-up hydrogen and are then heated in a gas-fired charge heater. The heated feed enters a series of two fixed-bed reactors where the hydrocracking reactions occur under conditions of high pressure and high temperature. The reactors contain fixed beds of aluminum catalyst impregnated with noble metals. The catalyst must be regenerated approximately every 18 to 24 months to remove carbon deposits and other catalyst deactivators. For regeneration, the unit is shut down and the catalyst is removed from the unit and

draft

regenerated off-site.

In the hydrocracking reactions, the cracked, unsaturated hydrocarbons (e.g., olefins) are converted to completely saturated species (e.g. paraffins). The hydrogen also combines with sulfur and nitrogen to produce hydrogen sulfide and ammonia, which can then be removed. Hot reactor effluent gas is washed with water, and is then scrubbed in an amine contactor to remove hydrogen sulfide and ammonia. The scrubbed gas is compressed and returned to the reactor section for additional conversion. Condensed stripping steam and wash water are sent to the sour water collection system. Amine, rich with hydrogen sulfide, is sent to the Amine Regeneration Unit.

The hydrocarbon liquid effluent from the hydrocracking reactors is sent to a group of fractionators where the various product streams are separated. The first fractionator in this chain has a gas-fired feed heater. Subsequent fractionators operate at successively lower temperature ranges, and have steam-heated reboilers. Products from the fractionators include off-gases which contribute to the refinery fuel gas supply, gaseous light-ends that are routed to the Gas Concentration Plant, light and heavy naphtha supplied to the gasoline blending operation, kerosene, diesel, and an internal recycle stream (fractionator bottoms).

D. Naphtha Hydrotreater Unit

The Naphtha Hydrotreater Unit pre-treats naphtha streams prior to the streams being processed in the Catalytic Reforming Unit and the Isomerization Unit. The Naphtha Hydrotreater Unit removes contaminants such as sulfur, nitrogen, and oxygen by promoting hydrogenation reactions (i.e. addition of hydrogen to the hydrocarbon chain) in a fixed bed reactor containing nickel/molybdenum-promoted aluminum catalyst. The nominal design charge capacity of the Naphtha Hydrotreater Unit is 32,000 BPD of naphtha.

Naphtha streams are fed to the Naphtha Hydrotreater Unit from the Crude Distillation Unit, the Gas Concentration Plant, the Distillate Hydrotreater Unit, and the Delayed Coking Unit. The mixed liquid naphtha streams are mixed with recycle and make-up hydrogen, heated in the Naphtha Hydrotreater Charge Heater, and passed over the catalyst bed. The hydrogen reacts with the sulfur and nitrogen contaminants to produce hydrogen sulfide and ammonia. Some of this hydrogen sulfide and ammonia is absorbed in a water wash section just downstream of the reactor. The resulting sour water product is collected in a separator and sent to the sour water collection system. The reactor effluent is separated into fuel gas and light and heavy naphtha in the Stripper and Naphtha Splitter fractionation columns. The fuel gas is routed to the Gas Concentration Plant for further processing. Light naphtha and heavy naphtha are sent to the Isomerization Unit and Catalytic Reforming Unit, respectively, for further treatment.

E. Catalytic Reforming Unit

The Catalytic Reforming Unit processes the heavy naphtha stream to make it more suitable for the production of motor gasoline. The nominal design charge capacity of this unit is 30,000 BPD of heavy naphtha.

The reforming process involves chemically rearranging the hydrocarbon molecules to produce higher-octane materials. [The octane number is a key measure of motor gasoline performance. The Catalytic Reforming Unit can produce reformate of up to 102 research octane number (RON-Clear).] Hydrogen gas is produced as a by-product of reforming, and is used as feed to the Naphtha Hydrotreater Unit, Distillate Hydrotreater Unit, Hydrocracker Unit, and Isomerization Unit.

The heavy naphtha feed streams, primarily from the Naphtha Hydrotreater Unit and Hydrocracker Unit, are mixed with recycle hydrogen and are passed through three reactors in series. Each reactor is preceded by a gas-fired feed heater. The reformed naphtha product (reformate) is separated from the by-product hydrogen. A portion of the hydrogen is compressed and recycled to be mixed with heavy naphtha feed material. The remaining hydrogen is compressed for use in other refinery processing units.

The reformate product is fractionated in the debutanizer for separation of light ends, which are sent to the Gas Concentration Plant for recovery. The reformate liquid product is sent to storage, for use in motor gasoline blending. Heat is provided to the debutanizer through the gas-fired Debutanizer Reboiler.

The Catalytic Reforming Unit reactor catalyst is continuously regenerated in the Catalytic Reforming Unit Catalyst Regenerator. Catalyst regeneration takes place in dedicated equipment and uses nitrogen, air, and perchloroethylene as regenerating agents. The Catalyst Regenerator performs two principal functions – solid catalyst regeneration and circulation. Spent catalyst from the final Catalytic Reforming Unit reactor vessel is conveyed to the Catalyst Regenerator, where it is regenerated in four steps: 1) coke burning with oxygen, 2) oxychlorination with oxygen and chloride, 3) catalyst drying with air/nitrogen, and 4) reduction of catalyst metals to "reduced" oxidation states. Exiting the Catalyst Regenerator, the regenerated catalyst is conveyed back into the first Catalytic Reforming Unit reactor.

Small quantities of hydrochloric acid and chlorine are generated in the Catalyst Regenerator. The vent gas from the Catalyst Regenerator is scrubbed in two stages with caustic solution and water in the Vent Gas Wash Tower for removal of acid gases, in particular hydrochloric acid. From the Wash Tower, the cleaned vent gas is discharged to the atmosphere.

F. Isomerization Unit

draft

The Isomerization Unit processes the light naphtha stream to produce a liquid product, called "isomerate," which is more suitable for the production of motor gasoline. The nominal design charge capacity of this unit is 18,000 BPD of light naphtha.

The Isomerization Unit increases the octane number of the light naphtha stream. [The octane number is a key measure of motor gasoline performance. The Isomerization Unit typically produces isomerate with a research octane number (RON-clear) of 83 to 85.] Hydrogen gas is produced as a by-product of reforming, and is used as feed to the Naphtha Hydrotreater Unit, Distillate Hydrotreater Unit, Hydrocracker Unit, and Isomerization Unit.

Heated light naphtha is mixed with hydrogen gas and a small amount of chloride reagent, and is then passed through two fixed bed catalytic reactors in series. The reactor effluent is separated in the Stabilizer fractionation column into fuel gas and isomerate. The fuel gas stream is scrubbed with caustic solution and water to remove acid gases, and is then routed to the Gas Concentration Plant for processing. The isomerate is sent to storage for use in motor gasoline blending.

G. Distillate Hydrotreater Unit

The Distillate Hydrotreater Unit reduces the levels of sulfur and other contaminants in kerosene and diesel fuel products to meet regulatory specifications. The nominal design charge capacity of this unit is 34,000 BPD of distillate feedstock. The unit will be capable of reducing the sulfur content in the liquid fuel products to less than 0.05 percent by weight.

The distillate feedstocks, including straight-run kerosene and diesel liquid streams from the Crude Distillation Unit and distillate from the Delayed Coking Unit, are mixed with recycle hydrogen and heated to the reaction temperature in a gas-fired heater. The feed mixture is passed over two reactor beds with inter-bed quench. To promote different reactions, one bed contains a cobalt-molybdenum catalyst and the other contains a nickel-molybdenum catalyst.

Hydrogen sulfide and ammonia by-products are removed in a water wash section and an amine contactor downstream of the reactor. The aqueous wash fraction containing some hydrogen sulfide and ammonia is removed in a Separator, and routed to the sour water collection system. The H_2S-rich amine from the contactor is sent to the Amine Regeneration Unit for regeneration before being returned to the recycle gas scrubber as lean amine.

Liquid organic effluent from the reactor is steam stripped to remove light end hydrocarbons, which are routed to the Gas Concentration Plant for processing. The remaining hydrocarbon stream is separated into naphtha, kerosene, and diesel fractions in a fractionator column with a gas-fired reboiler. Naphtha-cut boiling point

material is removed as the overhead stream and is sent to the Naphtha Hydrotreater Unit. The hydrotreated kerosene and diesel streams are sent to storage for use in jet fuel and diesel fuel blending.

H. Butane Conversion Unit

The proposed refinery will include a Butane Conversion Unit utilizing proprietary "InAlk" technology. This process uses a mixed C3/C4 feedstock material.[1] It produces both a low vapor pressure alkylate stream and a high-octane "polygasoline" stream for fuel blending. The nominal design charge capacity of this unit is 28,000 BPD of mixed C3/C4 feedstock.

Mixed C3/C4 feed, primarily from the Gas Concentration Plant, enters the process at the Isostripper, which has a gas-fired reboiler. Polymerization of C4 materials is enhanced by treatment of a side stream from the Isostripper in the Butamer reactor. This catalytic reactor uses a platinum-containing catalyst to produce an increased quantity of isobutane, which is returned to the Isostripper. Off-gas from the Butamer reactor, which contains light ends, can be recycled to the Gas Concentration Plant or can be used as refinery fuel gas (RFG).

The overhead stream from the Isostripper, which is enriched in isobutane, is processed in the Dehydrogenation Reactor. The isobutane stream is mixed with recycle hydrogen and heated in a gas-fired charge heater. Dehydrogenation takes place in a multi-stage, catalytic reactor having a gas-fired interheater. In the reactor effluent stream, the C3/C4 components are separated from residual hydrogen, a portion of which forms the recycle stream.

After preheating, the reactor effluent is compressed and passed through a Separator to remove excess hydrogen before being fed to a catalytic condensation reactor that polymerizes these molecules to form a C8 to C12 product blend. Under proper conditions, normal butane and isobutane can be selectively polymerized to form an iso-octane product with a high octane number for gasoline blending. The Stabilizer column separates this octane product from unreacted C3/C4 material.

Catalyst used in the dehydrogenation reactor is continuously regenerated by the Butane Conversion Unit Catalyst Regenerator. Catalyst regeneration takes place in dedicated equipment and uses nitrogen, air, and perchloroethylene as regenerating agents. The Catalyst Regenerator performs two principal functions – solid catalyst regeneration and circulation. Spent catalyst from the final dehydrogenation reactor

[1] Hydrocarbon materials in the petroleum refining industry are frequently classified and described based on the number of carbon atoms per molecule. For example, "C3" refers to materials with three carbon atoms per molecule, such as propane (C_3H_8) and propylene (C_3H_8); "C4" refers to materials with four carbon atoms per molecule, such as butane (C_4H_{10}) and butylene (C_4H_8).

draft

bed is conveyed to the Catalyst Regenerator. In this unit, spent catalyst is regenerated in four steps: 1) coke burning with oxygen, 2) oxychlorination with oxygen and chloride, 3) catalyst drying with air/nitrogen, and 4) reduction of catalyst metal to "reduced" oxidation states. Exiting the regeneration vessel, the regenerated catalyst is conveyed back into the first dehydrogenation bed. In this manner, freshly-regenerated catalyst is continuously circulated through the dehydrogenation reactors.

Small quantities of hydrochloric acid and chlorine are generated in the regeneration processes. The vent gas from the Catalyst Regenerator is scrubbed with caustic solution and water in a Vent Gas Wash Tower for removal of acid gases, in particular hydrochloric acid. From the Wash Tower, the cleaned vent gas is discharged to the atmosphere.

I. Benzene Reduction Unit

The proposed refinery will include a Benzene Reduction Unit using proprietary "BenSat" technology to reduce the content of aromatics, such as benzene, in materials used as gasoline blending components. The nominal design charge capacity of this unit is 14,000 BPD of naphtha or reformate.

Depending upon product requirements, the Benzene Reduction Unit can process light naphtha from the Naphtha Hydrotreater Unit, straight run naphtha from the Crude Distillation Unit, or light reformate streams. The initial step in the Benzene Reduction Unit is selective reaction of benzene (C_6H_6) in a Saturation Reactor. Hydrogen is fed with the hydrocarbon stream in slightly above stoichiometric amounts to promote benzene saturation. A Sulfur Guard Bed is provided to adsorb sulfur compounds from the feed and avoid sulfur poisoning of the reactor catalyst.

Downstream of the Saturation Reactor is a Stabilizer column that separates the liquid hydrocarbon stream, now enriched in saturated C6 compounds, from light ends and residual hydrogen.

Both the Reactor Preheater and Stabilizer Reboiler are steam heated. There are no fired heaters within the Benzene Reduction Unit.

J. Delayed Coking Unit

The Delayed Coking Unit processes vacuum residuum oil and other heavy crude oil components using a thermal cracking process to produce lighter liquid products and solid coke. The nominal design charge capacity of this unit is 32,000 BPD of vacuum residuum feed.

The Delayed Coking Unit uses a semi-continuous process and employs two parallel coke drums. These coke drums are alternately switched on-line and off-line after filling with coke.

draft

The primary feed material for the Delayed Coking Unit is vacuum residuum, which is the Vacuum Crude Distillation Column bottoms product from the Crude Distillation Unit. The feed material enters the bottom of the coker main fractionator where it mixes with condensed recycle material in the column. The combined stream is heated in one of the gas-fired coker charge heaters to initiate coke formation in the corresponding coke drum.

Coke drum overhead vapor, the product of the thermal cracking reactions during coking, flows back to the coker main fractionator. This column separates the coke drum overhead vapor into various light hydrocarbon constituents to be returned to other refinery process units. These include coker naphtha, which is sent to the Naphtha Hydrotreater Unit for further processing into gasoline blendstocks; light coker gas oil, which is sent to the Distillate Hydrotreater Unit for further processing into jet and diesel blendstocks; and heavy coker gas oil, which is sent to the Hydrocracker Unit for conversion and upgrade to additional gasoline and distillate fuel products. Sour water is sent to the sour water collection system.

After coking reactions are complete, the full coke drum is switched off-line and is steamed out and cooled. (The other coke drum is brought on-line and the coking process continues in that reactor train.) Vapors emitted from the opened coke drum are captured by the enclosed blowdown system and are recovered in the main fractionator. When cool, the coke drum bottom and top heads are removed. The coke is cut from the drum with a water jet and dropped into the Coke Pit.

K. Petroleum Coke Storage, Handling, and Loading

Petroleum coke from the Delayed Coking Unit is dropped into the Coke Pit. In the Coke Pit, free water is separated from the coke and recycled. A bridge crane is used to transfer the moist coke from the Coke Pit to the Coke Pad, where it is stored in piles. A bridge crane is also used to transfer coke from the Coke Pad to the Coke Crusher. The crushed, moist coke is then transferred via an enclosed belt conveyor to the Coke Silo.

Coke from the Delayed Coking Unit is transferred via an enclosed belt conveyor to the Coke Loading Facility. This facility includes a coke storage silo and a coke railcar loading operation.

L. Amine Regeneration Unit

Rich amine solution from the Gas Concentration Plant, Distillate Hydrotreater Unit, and Hydrocracker Unit is circulated to the Amine Regeneration Unit for regeneration. The Amine Regenerator is a liquid stripper column with a steam-heated reboiler. Mixed rich amine solutions are fed to the column yielding an overhead product rich in H_2S (i.e., "acid gas") that is routed to the Sulfur Recovery Plant as feed. The stripped amine bottoms liquid is cooled and filtered and then

recycled back to a storage tank as lean amine. This nitrogen-blanketed storage tank supplies make-up solution to the various amine contactors in the Gas Concentration Plant, Distillate Hydrotreater Unit, and Hydrocracker Unit, and contains the amine solution inventory during a shutdown. There are no fired heaters in the Amine Regeneration Unit.

M. Sour Water Stripper

Sour water streams containing H_2S, other organic sulfur compounds, ammonia (NH_3), and oil, are collected from various refinery process units and combined in a feed surge tank. Liquid hydrocarbons are decanted from the water and returned to the recovered oil tank. The Sour Water Stripper (SWS) removes H_2S /NH_3 from the sour water using a stripper tower having a steam-heated reboiler.

Feed sour water is preheated by exchange with the stripper bottoms stream. The reboiler is heated with low-pressure steam to generate vapor traffic up the stripper column. Vaporization of water strips H_2S and NH_3 from the downcoming sour water. Overhead vapors are cooled by an overhead condenser. Condensed water reflux is returned to the top tray in the stripper tower. The overhead, non-condensible materials, primarily H_2S and NH_3, are routed to the Sulfur Recovery Unit as feed. The stripped water is reused at the crude desalters and at process units requiring wash water (e.g., for ammonia removal). Any remaining stripped water is routed to the Wastewater Treatment Plant. There are no fired heaters associated with the Sour Water Stripper.

N. Sulfur Recovery Plant

The Sulfur Recovery Plant provides for safe disposal of the acid gas product streams from the Sour Water Stripper and the Amine Regeneration Unit. The plant comprises three processing steps: two parallel Claus sulfur recovery units, a tail gas treatment unit (TGTU), and a tail gas thermal oxidizer. The capacity of the Sulfur Recovery Plant is 608 long tons per day of liquid elemental sulfur product.

Each Claus sulfur recovery unit (SRU) uses a three-stage reactor train to convert approximately 94 to 97 percent of the feed sulfur into elemental sulfur. The TGTU uses catalytic reduction and amine absorption technology to recover additional sulfur compounds from the Claus SRU tail gas and recycles them back to the SRU. The unrecovered sulfur compounds are oxidized to sulfur dioxide (SO_2) in the tail gas thermal oxidizer.

For reliability, two complete 3-stage Claus trains are employed in the proposed refinery design; each normally operated at 67 percent of maximum acid gas throughput capacity. In the first (non-catalytic) reaction furnace section, ammonia is converted to nitrogen and water, and a portion of the H_2S is converted to SO_2 and water. The acid gas then flows through two catalyst beds in series where the Claus

reaction occurs (H_2S and SO_2 partially react to form sulfur). The sulfur in the vapors from the thermal section and each of the three catalyst beds are condensed and flow through seal legs to a covered tank termed the "Sulfur Pit." The vapor from the last sulfur condenser then flows to the TGTU.

Liquid sulfur in the Sulfur Pit is loaded into tank trucks or tank cars for sale. A steam-powered ejector draws sweep-air through the headspace of the Sulfur Pit tank to capture vapors containing reduced sulfur compounds. This sweep-air stream is routed to the inlet of the Claus SRU trains for recovery of the sulfur. There is no point in the SRU process when solid sulfur is produced or handled.

Tail gas exiting the last stage of Claus SRU is combined with hydrogen or methane (natural gas) and passed through the TGTU Reducing Reactor and a catalytic Hydrogenation Reactor to convert the residual sulfur dioxide back to H_2S. Downstream of these reactors, additional recovery of reduced sulfur is accomplished in an amine absorber column that uses an aqueous methyl diethanolamine (MDEA) solvent to scrub H_2S from the TGTU tail gas. The overhead stream from this contactor, containing very low sulfur levels, is sent to the tail gas thermal oxidizer for disposal. The rich MDEA solvent is regenerated in the TGTU amine stripper and H_2S is returned to the inlet of the Claus SRU trains to be recovered. Regenerated MDEA solvent is recirculated back to the TGTU amine absorber column.

There will be instances when upset conditions or maintenance events at the Sulfur Recovery Plant are such that compliance with the SO_2 emission limitations cannot be maintained indefinitely. The proposed refinery design includes several measures intended to avoid excess emissions during these periods. First, the Claus SRU trains are designed with excess capacity. In the event of an upset condition or maintenance event on one of the Claus SRU trains, the other train will be operated at full capacity. Second, the Sour Water Tank will be sized to provide continuously available sour water storage capacity of at least 3.78 million gallons. This will allow the feed to the Sour Water Stripper to cease for at least 24 hours, while the refinery process units continue operating and generating sour water streams. The cessation of Sour Water Stripper operations can be implemented within minutes, so that excess emissions are minimized even during unplanned outages of a Claus SRU train or the TGTU. Third, the Rich Amine Tank will be sized to provide continuously available rich amine storage capacity of at least 210,000 gallons, and the Lean Amine Tank will be sized and the lean amine solution will be managed to provide a continuously available supply of at least 210,000 gallons. These measures will allow the feed to the Amine Regeneration Unit to cease for a minimum of 24 hours, while the refinery process units continue operating and generating rich amine solution. The cessation of Amine Regeneration Unit operations also can be implemented within minutes, so that excess emissions are minimized even during unplanned outages of a Claus SRU train or the TGTU. When implemented simultaneously, these measures can reduce or stop the processing of acid gas in the Claus SRU trains during outages of the TGTU or both Claus SRU trains. For longer-term outages of a single Claus SRU train, to avoid exceeding the acid gas processing capability of a single train, reduced sulfur crude

oil would be inventoried at the plant and could be used to substitute some or all of the normal feed to the refinery process units.

O. Hydrogen Plant

The Hydrogen Plant will manufacture hydrogen by converting light hydrocarbons into hydrogen using a steam reforming process. The plant can use as feedstock either natural gas, a mixture of RFG and natural gas, a mixture of RFG and propane, or a mixture of RFG and butane. The nominal design capacity of this plant is 120 million standard cubic feet per day of hydrogen with purity in excess of 99.9 percent.

The Hydrogen Plant conversion process consists of four steps: feed pretreatment, steam reforming, shift-reaction conversion, and purification. The feed pretreatment step removes or converts contaminants in the feedstock that would otherwise poison or damage downstream catalysts. Next, the feed is combined with steam and is fed to the Hydrogen Reformer (also called the Steam-Methane Reformer). This process unit consists of a group of catalyst-packed tubular reactors within a gas-fired furnace that is maintained at the proper reaction temperature. Within the catalyst tubes, steam and hydrocarbons react to form hydrogen and carbon dioxide. The reactor effluent is cooled in a steam boiler and heat exchanger before being fed to a fixed-bed Shift Reactor, which drives the reaction to a greater extent of completion. High purity hydrogen is separated from the reactor effluent in a Pressure Swing Adsorption (PSA) unit. The PSA purge is routed to the Hydrogen Reformer Heater as fuel. The PSA purge gas, supplemented by RFG, is combusted in the reformer furnace containing the catalyst-filled reactor tubes.

P. Group "A" Storage Tanks

The Tank Farm includes eight dome-roof storage tanks that are equipped with nitrogen blanket systems and closed-vent systems vented to a compression system. For the purposes of the proposed Class I permit, due to their similar configuration and similar regulatory applicability, these storage tanks are grouped for administrative convenience.

The compressed vapors from the Group "A" Storage Tanks are routed to the RFG system. These storage tanks are designed to store raw materials and intermediates such as natural gasoline, isomerate, light naphtha, vacuum residuum, and slop oil.

Q. Group "B" Storage Tanks

The Tank Farm includes twenty-seven fixed-roof storage tanks that are equipped with internal floating roofs and closed-vent systems vented to a thermal oxidizer. These storage tanks are designed to store volatile organic liquids such as light and heavy naphtha, alkylate, reformate, gasoline, jet fuel, diesel fuel, and ethanol. For the purposes of the proposed Class I permit, due to their similar configuration and

Draft

similar regulatory applicability, these storage tanks are grouped for administrative convenience.

R. Group "C" Storage Tanks

The Tank Farm includes twenty petroleum liquid storage tanks that are equipped with external floating roofs. These storage tanks are designed to store petroleum liquids such as crude oil, light and heavy naphtha, distillate oil, gas oil, and flushing oil. For the purposes of the proposed Class I permit, due to their similar configuration and similar regulatory applicability, these storage tanks are grouped for administrative convenience.

S. Group "D" Storage Tanks

The Tank Farm includes six pressurized, spherical storage tanks that are designed to operate with no emissions. These storage tanks are designed to store volatile organic liquids such as butane, butylene, and liquefied petroleum gas. For the purposes of the proposed Class I permit, due to their similar configuration and similar regulatory applicability, these storage tanks are grouped for administrative convenience.

T. Group "E" Storage Tank

The Tank Farm includes one asphalt storage tank. This tank will be used to store asphalt that is produced at the proposed refinery.

U. Truck and Rail Car Loading Racks

The liquid products produced at the proposed refinery will be transported by rail cars and tank trucks. The proposed refinery will have two terminals for liquid transfer; one for railcar loading and unloading, and one for tank truck loading. Facilities for the loading and unloading of petroleum liquids have been designed to maximize the recovery of evaporative VOC emissions. Residual VOC emissions from loading of liquid products will be controlled using two thermal oxidizers, one serving the rail car loading racks and one serving the tank truck loading racks.

Each loading rack will have a maximum delivery rate of 600 gallons per minute (GPM) per loading arm. All gasoline product and distillate product loading racks are designed for bottom loading. LPG loading racks are designed for top loading. Displaced vapors from the LPG loading operations are routed back to storage.

V. Benzene Waste Operation

The Benzene Waste Operation comprises the refinery equipment used to manage aqueous and non-aqueous waste streams that contain benzene. This will include the equipment in the Wastewater Treatment Plant, and may include other equipment. For the purposes of the proposed Class I permit, equipment used for Benzene Waste

draft

Operations is grouped for administrative convenience, due to the unique regulatory requirements applicable to this equipment under subpart FF of 40 CFR part 61. Refer to Section IV.C.2 herein for a detailed discussion of this regulation.

W. Wastewater Treatment Plant

The wastewater treatment plant (WWTP) is designed to maximize water recycle and reuse. Treatment facilities include wastewater collection, primary treatment, secondary treatment, brine concentration, sludge treatment and sludge dewatering.

The treatment vessels and sumps comprising the WWTP will be enclosed tanks or similarly covered vessels. Open impoundments or uncovered tanks will not be used. Air drawn from the headspace of several WWTP vessels will be treated in a dedicated WWTP Thermal Oxidizer.

The wastewater collection system comprises a system of covered sewers for collection of oily wastewater. Oily water streams include de-salter water, crude and product tank water draws, and neutralized spent caustic. Other potentially oil-contaminated wastewater streams such as storm water from process units and tank farm dikes are collected on a "first flush basis" (i.e., the water that initially runs off an area). The remainder of the storm water runoff after the first flush and all other clean runoffs from other non-process surface drainage will be collected in the storm water pond for reuse as makeup water to the cooling tower.

The oily water sumps, which normally receive contaminated oily wastewater, will have double containment for spill prevention and leak detection. These sumps will be vented to the atmosphere either via a dedicated carbon adsorption system (i.e., "local carbon canister") or via the WWTP Thermal Oxidizer.

The primary treatment system comprises an API separator (i.e., an oil-water separator designed in conformance with the specifications of the American Petroleum Institute), a dissolved air flotation (DAF) unit, and an equalization basin. Exhaust streams from these three vessels are routed to the WWTP Thermal Oxidizer. The primary treatment system is designed to remove free oil and suspended solids from the refinery wastewater. The API separator will be an above-ground enclosed rectangular vessel in which the wastewater flows horizontally while the free oil particles rise due to buoyancy forces. The free oil floats to the surface of the tank and is skimmed into a slop oil compartment for recovery in the refinery. Solids settle in the bottom of the tank, where they are scraped into sludge hoppers by a flight scraper. The settled solids are removed from the sludge hopper by a sludge pump to an oily sludge tank for possible recycle to the Delayed Coking Unit.

Effluent from the API separator containing residual emulsified oil is further treated by the DAF unit. Wastewater is fed continuously at a controlled rate to the DAF system via the flocculation chamber. Polymer is added in the flocculation chamber

to facilitate flocculation of the colloidal suspended solids and oil. A portion of the DAF clarified effluent is pressurized with air in the DAF saturation tank. The dissolved air flotation system blends recycled effluent saturated with air, at elevated pressure, with the incoming coagulated wastewater to release microscopic air bubbles that cling to the oil and solids particles forcing them to float to the top of the flotation cell where they are skimmed off as "float." Heavier solids settle in the bottom of the DAF and will be treated and dewatered prior to disposal. The DAF treated effluent flows by gravity through the DAF effluent chamber into the equalization basin, from which it is pumped to the secondary treatment system.

The secondary treatment system comprises an activated sludge biological treatment system (i.e., "biotreater"), a clarifier, a warm lime softener, and a reverse osmosis system. The activated sludge process in the biotreater is an aerobic biological treatment that involves the stabilization of organic matter by microorganisms, which oxidize organic compounds present in wastewater to carbon dioxide. Phosphoric acid is added to the wastewater stream to provide the nutrient phosphorus as required by the microorganisms in the biological aeration treatment system. Powdered activated carbon treatment provides added treatment by the addition of powder activated carbon to remove refractory and non-biodegradable organics in the wastewater. Exhaust from the biotreater is routed to the WWTP Thermal Oxidizer.

Mixed liquor (sludge and water) from the biotreater flows by gravity to the clarifier, where biosolids and powdered activated carbon settle to the bottom of the clarifier. Treated wastewater flows by gravity to the warm lime softener, where it is treated to remove silica and hardness by adding magnesium chloride, soda ash, and caustic. Effluent water from the warm lime softener is polished through multi-media filters and routed to the reverse osmosis system. Clean water from the reverse osmosis system is recycled for further use in the refinery.

A portion of the recovered mixture of biosolids and powdered activated carbon from the clarifier is recycled to the biotreater, while the remainder is sent to a wet air oxidation unit for the regeneration of powdered activated carbon. Regeneration of the powdered activated carbon is achieved by oxidizing the biosolids, in liquid phase, under high temperature and high pressure, using high-pressure steam as the heat source. (There is no fuel input to the wet air oxidation unit.) Regenerated powdered activated carbon is recycled to the biotreater.

Ash from the wet air oxidization unit and sludge from the warm lime softener are routed to a belt press for dewatering prior to landfill disposal.

"Reject" water from the reverse osmosis system has elevated levels of dissolved solids and is known as brine solution. This brine solution is heated and routed to an induced-draft cooling tower for further concentration. The brine slurry from the concentration cooling tower is pumped to a spray dryer, which uses an integral natural gas-fired air heater. In the spray dryer, dissolved solids are recovered as a powdered salt material. Dry powder salt collected at the bottom of the spray dryer

is conveyed pneumatically to a collection system and is placed in containers for offsite disposal. The pneumatic conveying system exhausts through a fabric filter baghouse.

X. Equipment Leaks

The proposed refinery includes piping and a large number of screwed and flanged connectors, valves, pumps, compressors, and similar components for movement of gas and liquid raw materials, intermediates, and feedstocks. These components are potential sources of volatile organic compounds (VOC), hazardous air pollutants (HAPs), and H_2S emissions due to leakage.

Y. Emergency Flares

The proposed refinery will include a pressure relief system designed to contain non-routine hydrocarbon releases and route these releases to two elevated flares. One flare (Refinery Flare 1) will be centrally located near most of the refinery process units, and the second (Refinery Flare 2) will be located near the Delayed Coking Unit. In the event of a process upset or a sudden shutdown that causes hydrocarbon material to be released from any of the pressure relief devices and emergency depressurizing equipment throughout the refinery, the emergency flares will safely combust the released material and discharge the combustion products to the atmosphere.

Each of the two elevated flares is nominally designed to combust 2.0 million pounds per hour of gases (based on gases having a design average molecular weight of 28 pounds per pound-mole and released at a design temperature of 236 degrees Fahrenheit (°F)). This reflects the estimated maximum process vessel venting case and corresponds to the emergency scenario of a total refinery power failure. Steam is supplied to the flare tip to allow smokeless operation up to a release rate of 300,000 pounds per hour, with a VOC destruction efficiency of approximately 98 percent, under design conditions.

The features of the flare design include a continuous natural gas pilot flame and stack purge, and steam assist to improve VOC control and prevent soot formation. Pipeline natural gas is constantly purged up the flare stack column and is ignited at the top by the continuous pilot flame. This operation keeps the flare ready to immediately receive and safely combust released gases, without relying on pilot ignition. The pilot is continually monitored by remote camera or other means to confirm pilot operation, and to effect a restart of the pilot if necessary.

Z. Steam Boilers

Steam is distributed throughout the plant at three nominal pressure levels of 600 pressure per square inch gauge (psig), 150 psig, and 50 psig. Two boilers are to be

constructed that will generate steam at 600 psig and 700°F. Each boiler has a rated heat input of 419 million British Thermal Units (MMBTU) per hour and will be fired exclusively with pipeline-quality natural gas. Each boiler is sized to provide approximately 50 percent of the maximum projected steam demand. It is planned that both boilers will be operated continuously, but generally at 40 to 50 percent of capacity, to provide hot standby capacity for emergencies. When required, one boiler can be shutdown for maintenance and inspection, and the other can operate at full capacity to meet the plant needs.

AA. Cooling Tower

Water will be used in several areas of the proposed refinery to remove process heat, condense vapor streams, and cool products before storage. Warm cooling water from the process areas is circulated through a direct-contact cooling tower. A fraction of the water evaporates and the circulating cooling water temperature is reduced. The cooled water is then pumped back to the process areas for re-use. Water lost to evaporation is replaced with make-up water. Cooling water use has been minimized in the proposed refinery design to minimize evaporative losses and thereby conserve water. The system is sized for a cooling water circulation rate of 80,000 GPM.

Emissions from the cooling tower include VOC, due to leaks in indirect contact heat exchangers in refinery process units, and particulate matter, due to residual solids in aerosol drift particles released from the tower that subsequently evaporated.

BB. Internal Combustion Engines

The proposed refinery will include an on-site emergency electrical generator and two on-site fire water pumps. Each will be driven by a compression-ignition, diesel-fired, internal combustion engine. The emergency electrical generator will allow for a safe and orderly shutdown of the refinery, or individual refinery process units, in case of an emergency. The fire water pumps will be used to pump water as needed for extinguishing fires. The emergency electrical generator and the fire water pumps will also be operated for a few hours per month for routine testing and maintenance.

CC. Mobile Sources and Fugitive Dust Sources

The construction and operation of the proposed refinery will involve mobile sources and dust-generating operations such as land clearing, earthmoving, excavating, construction, demolition, material handling, storage or transporting operations, and vehicle use.

draft

III. EMISSIONS

A. General

Table III-A presents a summary of pollutant emission rates from all emission units at the proposed refinery. Emissions from specific emission units, including emission calculation methodologies and tabular emission summaries, are presented in Sections III.A through III.Q.

draft

Table III-A. Emission Summary

Pollutant Source(s)	NO_x		SO_2		CO		VOC		PM		PM_{10}		hydrogen sulfide	
	lb/hr	tpy	lb/hr	tpy	lb/hr	tpy	lb/hr	tpy	lb/hr	tpy	lb/hr	tpy	lb/hr	tpy
Process Heaters	66.73	292.26	22.66	99.25	155.86	682.68	15.59	68.27	29.22	128.00	29.22	128.00	0.92	4.04
Boilers	10.48	45.90	0.50	2.20	13.41	58.76	3.35	14.69	3.14	13.77	6.28	27.54	-----	-----
Sulfur Recovery Plant (incl. SRU Thermal Oxidizer)	6.00	26.28	33.60	147.17	8.40	36.79	0.55	2.41	0.76	3.33	0.76	3.33	0.09	0.39
Group "B" Storage Tanks (incl. Tank Farm Thermal Oxidizer)	2.25	9.86	0.33	1.43	4.73	20.71	30.61	7.60	0.43	1.87	0.43	1.87	0.01	0.06
Wastewater Treatment Plant (incl. WWTP Thermal Oxidizer)	0.03	0.15	0.00	0.01	0.03	0.12	8.06	35.33	0.00	0.01	0.00	0.01	0.00	0.00
Loading Racks (incl. Loading Rack Thermal Oxidizers)	2.47	10.80	0.14	0.62	2.07	9.07	27.81	12.81	0.19	0.82	0.19	0.82	0.01	0.03
Group "C" Storage Tanks	-----	-----	-----	-----	-----	-----	26.87	81.30	-----	-----	-----	-----	-----	-----
Emergency Flares	0.11	0.50	0.00	0.00	0.62	2.70	0.10	0.46	-----	-----	-----	-----	-----	-----
Coke Silo Baghouse	-----	-----	-----	-----	-----	-----	-----	-----	0.09	0.41	0.09	0.41	-----	-----
WWTP Spray Dryer Baghouse	-----	-----	-----	-----	-----	-----	-----	-----	1.17	5.11	1.17	5.11	-----	-----
Catalyst Regenerator Vents	1.65	7.22	-----	-----	1.00	4.40	-----	-----	-----	-----	-----	-----	-----	-----
Cooling Tower	-----	-----	-----	-----	-----	-----	3.36	14.72	1.60	7.01	1.60	7.01	-----	-----
Equipment Leaks	-----	-----	-----	-----	-----	-----	16.82	13.18	-----	-----	-----	-----	0.27	1.22
Internal Combustion Engines	25.7	2.57	0.03	0.00	17.3	1.73	2.12	0.21	0.99	0.10	0.99	0.10	-----	-----
Vehicle Traffic on Paved Areas	-----	-----	-----	-----	-----	-----	-----	-----	3.52	7.71	0.69	1.50	-----	-----
SOURCE-WIDE TOTAL	115.38	395.54	57.26	250.66	203.39	816.96	135.24	250.97	44.26	181.92	41.43	175.71	1.50	6.61

Table III-A. Emission Summary (Continued)

Pollutant Source(s)	Ammonia		Acetaldehyde		Benzene		Benzo(a)pyrene		Chlorine	
	lb/hr	tpy	lb/hr	tpy	lb/hr	tpy	lb/hr	tpy	lb/hr	tpy
Process Heaters	5.44	23.8	0.0095	0.041	0.24	1.1	0.000013	0.000058		-----
Boilers	-----	-----	-----	-----	0.0018	0.0077	-----	-----	-----	-----
Sulfur Recovery Plant (incl. SRU Thermal Oxidizer)	-----	-----	0.00024	0.0011	0.0062	0.027	0.0000004	0.0000015	-----	-----
Group "B" Storage Tanks (incl. Tank Farm Thermal Oxidizer)	-----	-----	-----	-----	0.28	0.058	0.0000002	0.0000008	-----	-----
Wastewater Treatment Plant (incl. WWTP Thermal Oxidizer)	-----	-----	-----	-----	0.40	1.77	-----	-----	-----	-----
Loading Racks (incl. Loading Rack Thermal Oxidizers)	-----	-----	-----	-----	-----	-----	-----	-----	-----	-----
Group "C" Storage Tanks	-----	-----	-----	-----	0.15	0.46	-----	-----	-----	-----
Emergency Flares	-----	-----	-----	-----	-----	-----	-----	-----	-----	-----
Coke Silo Baghouse	-----	-----	-----	-----	-----	-----	-----	-----	-----	-----
WWTP Spray Dryer Baghouse	-----	-----	-----	-----	-----	-----	-----	-----	-----	-----
Catalyst Regenerator Vents	-----	-----	-----	-----	-----	-----	-----	-----	0.12	0.52
Cooling Tower	-----	-----	-----	-----	0.04	0.18	-----	-----	-----	-----
Equipment Leaks	-----	-----	-----	-----	0.14	0.11	-----	-----	-----	-----
Internal Combustion Engines	-----	-----	-----	-----	-----	-----	-----	-----	-----	-----
Vehicle Traffic on Paved Areas	-----	-----	-----	-----	-----	-----	-----	-----	-----	-----
SOURCE-WIDE TOTAL	5.44	23.8	0.0097	0.042	1.26	3.71	0.000013	0.000058	0.12	0.52

Table III-A. Emission Summary (Continued)

Pollutant Source(s)	Chrysene		Ethylbenzene		Fluoranthene		Formaldehyde		Hexane	
	lb/hr	tpy	lb/hr	tpy	lb/hr	tpy	lb/hr	tpy	lb/hr	tpy
Process Heaters	0.000010	0.000044	-----	-----	0.00012	0.00053	0.055	0.24	-----	-----
Boilers	-----	-----	-----	-----	0.0000025	0.000011	0.063	0.28	-----	-----
Sulfur Recovery Plant (incl. SRU Thermal Oxidizer)	0.0000003	0.0000011	-----	-----	0.0000031	0.000014	0.0014	0.0062	-----	-----
Group "B" Storage Tanks (incl. Tank Farm Thermal Oxidizer)	-----	-----	0.067	0.014	-----	-----	0.00079	0.0035	1.5	0.30
Wastewater Treatment Plant (incl. WWTP Thermal Oxidizer)	-----	-----	-----	-----	-----	-----	-----	-----	-----	-----
Loading Racks (incl. Loading Rack Thermal Oxidizers)	-----	-----	-----	-----	-----	-----	-----	-----	-----	-----
Group "C" Storage Tanks	-----	-----	0.055	0.17	-----	-----	-----	-----	1.3	3.9
Emergency Flares	-----	-----	-----	-----	-----	-----	-----	-----	-----	-----
Coke Silo Baghouse	-----	-----	-----	-----	-----	-----	-----	-----	-----	-----
WWTP Spray Dryer Baghouse	-----	-----	-----	-----	-----	-----	-----	-----	-----	-----
Catalyst Regenerator Vents	-----	-----	-----	-----	-----	-----	-----	-----	-----	-----
Cooling Tower	-----	-----	-----	-----	-----	-----	-----	-----	-----	-----
Equipment Leaks	-----	-----	0.04	0.03	-----	-----	-----	-----	0.80	0.63
Internal Combustion Engines	-----	-----	-----	-----	-----	-----	-----	-----	-----	-----
Vehicle Traffic on Paved Areas	-----	-----	-----	-----	-----	-----	-----	-----	-----	-----
SOURCE-WIDE TOTAL	0.000010	0.000044	0.16	0.21	0.00013	0.00055	0.12	0.53	3.6	4.8

Table III-A. Emission Summary (Continued)

Pollutant Source(s)	Naphthalene		Perchloroethylene		Phenol		Toluene		Xylene	
	lb/hr	tpy	lb/hr	tpy	lb/hr	tpy	lb/hr	tpy	lb/hr	tpy
Process Heaters	0.00076	0.0033	-----	-----	0.0034	0.015	0.33	1.40	-----	-----
Boilers	0.00051	0.0022	-----	-----	-----	-----	0.0029	0.012	-----	-----
Sulfur Recovery Plant (incl. SRU Thermal Oxidizer)	0.000019	0.000085	-----	-----	0.000086	0.00038	0.0084	0.037	-----	-----
Group "B" Storage Tanks (incl. Tank Farm Thermal Oxidizer)	-----	-----	-----	-----	-----	-----	0.65	0.15	0.23	0.048
Wastewater Treatment Plant (incl. WWTP Thermal Oxidizer)	-----	-----	-----	-----	-----	-----	-----	-----	-----	-----
Loading Racks (incl. Loading Rack Thermal Oxidizers)	-----	-----	-----	-----	-----	-----	-----	-----	-----	-----
Group "C" Storage Tanks	-----	-----	-----	-----	-----	-----	0.52	1.6	0.17	0.50
Emergency Flares	-----	-----	-----	-----	-----	-----	-----	-----	-----	-----
Coke Silo Baghouse	-----	-----	-----	-----	-----	-----	-----	-----	-----	-----
WWTP Spray Dryer Baghouse	-----	-----	-----	-----	-----	-----	-----	-----	-----	-----
Catalyst Regenerator Vents	-----	-----	0.60	2.60	-----	-----	-----	-----	-----	-----
Cooling Tower	-----	-----	-----	-----	-----	-----	-----	-----	-----	-----
Equipment Leaks	-----	-----	-----	-----	-----	-----	0.35	0.29	0.13	0.10
Internal Combustion Engines	-----	-----	-----	-----	-----	-----	-----	-----	-----	-----
Vehicle Traffic on Paved Areas	-----	-----	-----	-----	-----	-----	-----	-----	-----	-----
SOURCE-WIDE TOTAL	0.0013	0.0056	0.60	2.60	0.0035	0.015	1.9	3.5	0.53	0.65

B. Process Heaters

Hourly and annual emissions from the process heaters at the proposed refinery are presented in Table III-B. Emissions of all pollutants from process heaters were calculated as the product of the permitted maximum heat input capacity, expressed in MMBtu/hr, and an emission factor, expressed in lb/MMBtu heat input. For example, NO_X emissions from the Atmospheric Crude Charge Heater were calculated as follows:

$$E_{NO_X} = \left(346\ \frac{\text{MMBtu}}{\text{hr}}\right) \times \left(0.0125\ \frac{\text{lb}}{\text{MMBtu}}\right) = 4.3\ \text{lb/hr}$$

All process heaters are permitted to operate at maximum heat input capacity, without restriction, on a year-round basis. Thus, annual emissions are calculated assuming the hourly emission rate for 8,760 hours per year.

Emission factors used to calculate emissions from process heaters are shown in Table III-B and were derived as follows:

- For NO_X, PM/PM_{10}, and CO, the permitted emission limit is expressed in lb/MMBtu heat input and is used directly.

- For SO_2, the emission factor is calculated using the permitted fuel sulfur limit of 35 ppmv. Other values required for the calculation of an emission factor in terms of lb/MMBtu heat input are a conservatively assumed RFG heating value of 1000 Btu per standard cubic foot; a molecular weight of 64.06 pounds per pound-mole for SO_2; and a physical constant of 385.55 standard cubic feet per pound-mole of gas. The calculation is as follows:

$$EF_{SO_2} = \frac{\left(35\ \frac{\text{lb}\cdot\text{mol S}}{10^6\ \text{lb}\cdot\text{mol RFG}}\right) \times \left(64.06\ \frac{\text{lb SO}_2}{\text{lb}\cdot\text{mol S}}\right)}{\left(385.55\ \frac{10^6\ \text{scf RFG}}{10^6\ \text{lb}\cdot\text{mol RFG}}\right) \times \left(1{,}000\ \frac{\text{MMBtu}}{10^6\ \text{scf RFG}}\right)} = 0.0058\ \frac{\text{lb SO}_2}{\text{MMBtu}}$$

- For ammonia (NH_3), which is only emitted by the process heaters that are equipped with SCR, the emission factor is calculated using the permitted emission limit of 5.0 ppmvd, corrected to zero percent excess oxygen. Other values required for the calculation of an emission factor in terms of lb/MMBtu heat input are an assumed F-factor of 8,710 standard cubic foot of exhaust per MMBtu heat input from RFG; a molecular weight of 17.03 pounds per pound-mole for NH_3; and a physical constant of 385.55 standard cubic feet per pound-mole of gas. The calculation is as follows:

draft

$$EF_{NH_3} = \frac{\left(\frac{5\ \text{lb}\cdot\text{mol NH}_3}{10^6\ \text{lb}\cdot\text{mol exhaust}}\right) \times \left(\frac{17.03\ \text{lb NH}_3}{\text{lb}\cdot\text{mol NH}_3}\right)}{\left(\frac{385.55\ \text{scf exhaust}}{\text{lb}\cdot\text{mol exhaust}}\right) \times \left(\frac{\text{MMBtu}}{8{,}710\ \text{scf exhaust}}\right)} = 0.0019\ \frac{\text{lb NH}_3}{\text{MMBtu}}$$

- For VOC, the emission factor represents an engineering estimate of the emission rate achievable with the control strategy representing BACT. (As discussed in Section V.B.V below, no numerical BACT emission limit for VOC emissions from heaters is included in the proposed permit.)

- For H_2S and individual organic HAPs, the emission factor is taken from the California Air Toxics Emission Factors (CATEF) database, available at http://www.arb.ca.gov/emisinv/catef/catef.htm.

draft

Table III-B. Process Heater Emissions

Emission Point No.	Description	Capacity (MMBtu/hr)	NO_x			SO_2			CO			VOC			PM/PM_{10}		
			lb/MMBtu	lb/hr	ton/year	lb/MMBtu	lb/hr	ton/year	lb/MMBtu	lb/hr	ton/year	lb/MMBtu	lb/hr	ton/year	lb/MMBtu	lb/hr	ton/year
EP-1	Atm. Crude Heater	346	0.0125	4.3	18.9	0.0058	2.0	8.8	0.04	13.8	60.6	0.004	1.4	6.1	0.0075	2.6	11.4
	Vac. Crude Heater	100	0.034	3.4	15.0	0.0058	0.6	2.6	0.04	4.0	17.6	0.004	0.4	1.8	0.0075	0.8	3.3
EP-2	Catalytic Reforming Unit Charge Heater	122	0.0125	1.5	6.7	0.0058	0.7	3.1	0.04	4.9	21.5	0.004	0.5	2.1	0.0075	0.9	4.0
	Catalytic Reforming Unit Interheater #1	192	0.0125	2.4	10.5	0.0058	1.1	4.9	0.04	7.7	33.7	0.004	0.8	3.4	0.0075	1.4	6.3
	Catalytic Reforming Unit Interheater #2	129	0.0125	1.6	7.1	0.0058	0.8	3.3	0.04	5.2	22.6	0.004	0.5	2.3	0.0075	1.0	4.2
EP-3	Catalytic Reforming Unit Debutanizer Reboiler	23	0.030	0.7	3.0	0.0058	0.1	0.6	0.04	0.9	4.1	0.004	0.1	0.4	0.0075	0.2	0.8
EP-4	Naphtha Hydrotreater Charge Heater	21.4	0.030	0.6	2.8	0.0058	0.1	0.5	0.04	0.9	3.7	0.004	0.1	0.4	0.0075	0.2	0.7
EP-5	Distillate Hydrotreater Charge Heater	25	0.033	0.8	3.6	0.0058	0.1	0.6	0.04	1.0	4.4	0.004	0.1	0.4	0.0075	0.2	0.8
	Distillate Hydrotreater Splitter Reboiler	117.1	0.032	3.7	16.4	0.0058	0.7	3.0	0.04	4.7	20.5	0.004	0.5	2.1	0.0075	0.9	3.8
EP-6	Hydrocracker Unit Charge Heater	69.8	0.034	2.4	10.4	0.0058	0.4	1.8	0.04	2.8	12.2	0.004	0.3	1.2	0.0075	0.5	2.3
	Hydrocracker Unit Main Fractionator Heater	211.3	0.025	5.3	23.1	0.0058	1.2	5.4	0.04	8.5	37.0	0.004	0.8	3.7	0.0075	1.6	6.9
EP-7	Hydrogen Reformer Heater	1434.9	0.0125	17.9	78.6	0.0058	8.3	36.5	0.04	57.4	251.4	0.004	5.7	25.1	0.0075	10.8	47.1
EP-10	Delayed Coking Unit Charge Heaters	198.9	0.030	6.0	26.1	0.0058	1.2	5.1	0.04	8.0	34.8	0.004	0.8	3.5	0.0075	1.5	6.5
EP-19	Butane Conversion Unit Charge Heater	310.9	0.0125	3.9	17.0	0.0058	1.8	7.9	0.04	12.4	54.5	0.004	1.2	5.4	0.0075	2.3	10.2
	Butane Conversion Unit Interstage Heater	327.5	0.0125	4.1	17.9	0.0058	1.9	8.3	0.04	13.1	57.4	0.004	1.3	5.7	0.0075	2.5	10.8
EP-20	Butane Conversion Unit Stripper Reboiler	222.0	0.030	6.7	29.2	0.0058	1.3	5.7	0.04	8.9	38.9	0.004	0.9	3.9	0.0075	1.7	7.3
EP-23	Wastewater Treatment Plant Spray Dryer Heater	44.0	0.030	1.3	5.8	0.0058	0.3	1.1	0.04	1.8	7.7	0.004	0.2	0.8	0.0075	0.3	1.4
TOTAL				66.7	292.3		22.7	99.3		155.9	682.7		15.6	68.3		29.2	128.0

Table III-B. Process Heater Emissions (Continued)

Emission Point No.	Description	Capacity (MMBtu/hr)	Ammonia			Hydrogen Sulfide			Acetaldehyde			Benzene		
			lb/MMBtu	lb/hr	ton/year	lb/MMBtu	lb/hr	ton/year	lb/MMBtu	lb/hr	ton/year	lb/MMBtu	lb/hr	ton/year
EP-1	Atm. Crude Heater	346	0.0019	0.66	2.88	2.37E-04	8.2E-02	3.6E-04	2.43E-06	8.4E-04	3.7E-03	6.24E-05	2.2E-02	9.5E-02
	Vac. Crude Heater	100				2.37E-04	2.4E-02	1.0E-04	2.43E-06	2.4E-04	1.1E-03	6.24E-05	6.3E-03	2.8E-02
EP-2	Catalytic Reforming Unit Charge Heater	122	0.0019	0.23	1.02	2.37E-04	2.9E-02	1.3E-04	2.43E-06	3.0E-04	1.3E-03	6.24E-05	7.6E-03	3.3E-02
	Catalytic Reforming Unit Interheater #1	192	0.0019	0.37	1.60	2.37E-04	4.6E-02	2.0E-04	2.43E-06	4.7E-04	2.0E-03	6.24E-05	1.2E-02	5.3E-02
	Catalytic Reforming Unit Interheater #2	129	0.0019	0.25	1.07	2.37E-04	3.1E-02	1.3E-04	2.43E-06	3.1E-04	1.4E-03	6.24E-05	8.1E-03	3.5E-02
EP-3	Catalytic Reforming Unit Debutanizer Reboiler	23	-----	-----	-----	2.37E-04	5.5E-03	2.4E-05	2.43E-06	5.6E-05	2.5E-04	6.24E-05	1.4E-03	6.3E-03
EP-4	Naphtha Hydrotreater Charge Heater	21.4	-----	-----	-----	2.37E-04	5.1E-03	2.2E-05	2.43E-06	5.2E-05	2.3E-04	6.24E-05	1.3E-03	5.8E-03
EP-5	Distillate Hydrotreater Charge Heater	25	-----	-----	-----	2.37E-04	5.9E-03	2.6E-05	2.43E-06	6.1E-05	2.7E-04	6.24E-05	1.6E-03	6.8E-03
	Distillate Hydrotreater Splitter Reboiler	117.1	-----	-----	-----	2.37E-04	2.8E-02	1.2E-04	2.43E-06	2.8E-04	1.2E-03	6.24E-05	7.3E-03	3.2E-02
EP-6	Hydrocracker Unit Charge Heater	69.8	-----	-----	-----	2.37E-04	1.7E-02	7.2E-05	2.43E-06	1.7E-04	7.4E-04	6.24E-05	4.4E-03	1.9E-02
	Hydrocracker Unit Main Fractionator Heater	211.3	-----	-----	-----	2.37E-04	5.0E-02	2.2E-04	2.43E-06	5.1E-04	2.2E-03	6.24E-05	1.3E-02	5.8E-02
EP-7	Hydrogen Reformer Heater	1434.9	0.0019	2.73	11.94	2.37E-04	3.4E-01	1.5E-03	2.43E-06	3.5E-03	1.5E-02	6.24E-05	9.0E-02	3.9E-01
EP-10	Delayed Coking Unit Charge Heaters	198.9	-----	-----	-----	2.37E-04	4.7E-02	2.1E-04	2.43E-06	4.8E-04	2.1E-03	6.24E-05	1.2E-02	5.4E-02
EP-19	Butane Conversion Unit Charge Heater	310.9	0.0019	0.59	2.59	2.37E-04	7.4E-02	3.2E-04	2.43E-06	7.6E-04	3.3E-03	6.24E-05	1.9E-02	8.5E-02
	Butane Conversion Unit Interstage Heater	327.5	0.0019	0.62	2.73	2.37E-04	7.8E-02	3.4E-04	2.43E-06	8.0E-04	3.5E-03	6.24E-05	2.0E-02	9.0E-02
EP-20	Butane Conversion Unit Stripper Reboiler	222.0	-----	-----	-----	2.37E-04	5.3E-02	2.3E-04	2.43E-06	5.4E-04	2.4E-03	6.24E-05	1.4E-02	6.1E-02
EP-23	Wastewater Treatment Plant Spray Dryer Heater	44.0	-----	-----	-----	2.37E-04	1.0E-02	4.6E-05	2.43E-06	1.1E-04	4.7E-04	6.24E-05	2.7E-03	1.2E-02
TOTAL				5.4	23.8		9.2E-01	4.0E+00		9.5E-03	4.1E-02		2.4E-01	1.1E+00

Table III-B. Process Heater Emissions (Continued)

Emission Point No.	Description	Capacity (MMBtu/hr)	Benzo(a)pyrene			Chrysene			Fluoranthene			Formaldehyde		
			lb/MMBtu	lb/hr	ton/year	lb/MMBtu	lb/hr	ton/year	lb/MMBtu	lb/hr	ton/year	lb/MMBtu	lb/hr	ton/year
EP-1	Atm. Crude Heater	346	3.37E-09	1.2E-06	5.1E-06	2.59E-09	9.0E-07	3.9E-06	3.10E-08	1.1E-05	4.7E-05	1.41E-05	4.9E-03	2.1E-02
	Vac. Crude Heater	100	3.37E-09	3.4E-07	1.5E-06	2.59E-09	2.6E-07	1.1E-06	3.10E-08	3.1E-06	1.4E-05	1.41E-05	1.4E-03	6.2E-03
EP-2	Catalytic Reforming Unit Charge Heater	122	3.37E-09	4.1E-07	1.8E-06	2.59E-09	3.2E-07	1.4E-06	3.10E-08	3.8E-06	1.7E-05	1.41E-05	1.7E-03	7.6E-03
	Catalytic Reforming Unit Interheater #1	192	3.37E-09	6.5E-07	2.8E-06	2.59E-09	5.0E-07	2.2E-06	3.10E-08	6.0E-06	2.6E-05	1.41E-05	2.7E-03	1.2E-02
	Catalytic Reforming Unit Interheater #2	129	3.37E-09	4.4E-07	1.9E-06	2.59E-09	3.3E-07	1.5E-06	3.10E-08	4.0E-06	1.8E-05	1.41E-05	1.8E-03	8.0E-03
EP-3	Catalytic Reforming Unit Debutanizer Reboiler	23	3.37E-09	7.8E-08	3.4E-07	2.59E-09	6.0E-08	2.6E-07	3.10E-08	7.2E-07	3.2E-06	1.41E-05	3.3E-04	1.4E-03
EP-4	Naphtha Hydrotreater Charge Heater	21.4	3.37E-09	7.2E-08	3.2E-07	2.59E-09	5.5E-08	2.4E-07	3.10E-08	6.6E-07	2.9E-06	1.41E-05	3.0E-04	1.3E-03
EP-5	Distillate Hydrotreater Charge Heater	25	3.37E-09	8.4E-08	3.7E-07	2.59E-09	6.5E-08	2.8E-07	3.10E-08	7.8E-07	3.4E-06	1.41E-05	3.5E-04	1.5E-03
	Distillate Hydrotreater Splitter Reboiler	117.1	3.37E-09	3.9E-07	1.7E-06	2.59E-09	3.0E-07	1.3E-06	3.10E-08	3.6E-06	1.6E-05	1.41E-05	1.7E-03	7.2E-03
EP-6	Hydrocracker Unit Charge Heater	69.8	3.37E-09	2.4E-07	1.0E-06	2.59E-09	1.8E-07	7.9E-07	3.10E-08	2.2E-06	9.5E-06	1.41E-05	9.8E-04	4.3E-03
	Hydrocracker Unit Main Fractionator Heater	211.3	3.37E-09	7.1E-07	3.1E-06	2.59E-09	5.5E-07	2.4E-06	3.10E-08	6.6E-06	2.9E-05	1.41E-05	3.0E-03	1.3E-02
EP-7	Hydrogen Reformer Heater	1434.9	3.37E-09	4.8E-06	2.1E-05	2.59E-09	3.7E-06	1.6E-05	3.10E-08	4.4E-05	1.9E-04	1.41E-05	2.0E-02	8.9E-02
EP-10	Delayed Coking Unit Charge Heaters	198.9	3.37E-09	6.7E-07	2.9E-06	2.59E-09	5.2E-07	2.3E-06	3.10E-08	6.2E-06	2.7E-05	1.41E-05	2.8E-03	1.2E-02
EP-19	Butane Conversion Unit Charge Heater	310.9	3.37E-09	1.0E-06	4.6E-06	2.59E-09	8.1E-07	3.5E-06	3.10E-08	9.6E-06	4.2E-05	1.41E-05	4.4E-03	1.9E-02
	Butane Conversion Unit Interstage Heater	327.5	3.37E-09	1.1E-06	4.8E-06	2.59E-09	8.5E-07	3.7E-06	3.10E-08	1.0E-05	4.4E-05	1.41E-05	4.6E-03	2.0E-02
EP-20	Butane Conversion Unit Stripper Reboiler	222.0	3.37E-09	7.5E-07	3.3E-06	2.59E-09	5.7E-07	2.5E-06	3.10E-08	6.9E-06	3.0E-05	1.41E-05	3.1E-03	1.4E-02
EP-23	Wastewater Treatment Plant Spray Dryer Heater	44.0	3.37E-09	1.5E-07	6.5E-07	2.59E-09	1.1E-07	5.0E-07	3.10E-08	1.4E-06	6.0E-06	1.41E-05	6.2E-04	2.7E-03
TOTAL				1.3E-05	5.8E-05		1.0E-05	4.4E-05		1.2E-04	5.3E-04		5.5E-02	2.4E-01

Table III-B. Process Heater Emissions (Continued)

Emission Point No.	Description	Capacity (MMBtu/hr)	Naphthalene			Phenol			Toluene		
			lb/MMBtu	lb/hr	ton/year	lb/MMBtu	lb/hr	ton/year	lb/MMBtu	lb/hr	ton/year
EP-1	Atm. Crude Heater	346	1.94E-07	6.7E-05	2.9E-04	8.64E-07	3.0E-04	1.3E-03	8.35E-05	2.9E-02	1.3E-01
	Vac. Crude Heater	100	1.94E-07	2.0E-05	8.6E-05	8.64E-07	8.7E-05	3.8E-04	8.35E-05	8.4E-03	3.7E-02
EP-2	Catalytic Reforming Unit Charge Heater	122	1.94E-07	2.4E-05	1.0E-04	8.64E-07	1.1E-04	4.6E-04	8.35E-05	1.0E-02	4.5E-02
	Catalytic Reforming Unit Interheater #1	192	1.94E-07	3.7E-05	1.6E-04	8.64E-07	1.7E-04	7.3E-04	8.35E-05	1.6E-02	7.0E-02
	Catalytic Reforming Unit Interheater #2	129	1.94E-07	2.5E-05	1.1E-04	8.64E-07	1.1E-04	4.9E-04	8.35E-05	1.1E-02	4.7E-02
EP-3	Catalytic Reforming Unit Debutanizer Reboiler	23	1.94E-07	4.5E-06	2.0E-05	8.64E-07	2.0E-05	8.8E-05	8.35E-05	1.9E-03	8.5E-03
EP-4	Naphtha Hydrotreater Charge Heater	21.4	1.94E-07	4.2E-06	1.8E-05	8.64E-07	1.8E-05	8.1E-05	8.35E-05	1.8E-03	7.8E-03
EP-5	Distillate Hydrotreater Charge Heater	25	1.94E-07	4.9E-06	2.1E-05	8.64E-07	2.2E-05	9.5E-05	8.35E-05	2.1E-03	9.1E-03
	Distillate Hydrotreater Splitter Reboiler	117.1	1.94E-07	2.3E-05	1.0E-04	8.64E-07	1.0E-04	4.4E-04	8.35E-05	9.8E-03	4.3E-02
EP-6	Hydrocracker Unit Charge Heater	69.8	1.94E-07	1.4E-05	5.9E-05	8.64E-07	6.0E-05	2.6E-04	8.35E-05	5.8E-03	2.6E-02
	Hydrocracker Unit Main Fractionator Heater	211.3	1.94E-07	4.1E-05	1.8E-04	8.64E-07	1.8E-04	8.0E-04	8.35E-05	1.8E-02	7.7E-02
EP-7	Hydrogen Reformer Heater	1434.9	1.94E-07	2.8E-04	1.2E-03	8.64E-07	1.2E-03	5.4E-03	8.35E-05	1.2E-01	5.2E-01
EP-10	Delayed Coking Unit Charge Heaters	198.9	1.94E-07	3.9E-05	1.7E-04	8.64E-07	1.7E-04	7.5E-04	8.35E-05	1.7E-02	7.3E-02
EP-19	Butane Conversion Unit Charge Heater	310.9	1.94E-07	6.0E-05	2.6E-04	8.64E-07	2.7E-04	1.2E-03	8.35E-05	2.6E-02	1.1E-01
	Butane Conversion Unit Interstage Heater	327.5	1.94E-07	6.4E-05	2.8E-04	8.64E-07	2.8E-04	1.2E-03	8.35E-05	2.7E-02	1.2E-01
EP-20	Butane Conversion Unit Stripper Reboiler	222.0	1.94E-07	4.3E-05	1.9E-04	8.64E-07	1.9E-04	8.4E-04	8.35E-05	1.9E-02	8.1E-02
EP-23	Wastewater Treatment Plant Spray Dryer Heater	44.0	1.94E-07	8.5E-06	3.7E-05	8.64E-07	3.8E-05	1.7E-04	8.35E-05	3.7E-03	1.6E-02
TOTAL				7.6E-04	3.3E-03		3.4E-03	1.5E-02		3.3E-01	1.4E+00

C. Boilers

Emissions of all pollutants from boilers were calculated using emission factors and heat input capacity in the same manner described in Section III.B, above, for process heater emissions.

Both boilers are permitted to operate at maximum heat input capacity, without restriction, on a year-round basis. Thus, annual emissions are calculated assuming the hourly emission rate for 8,760 hours per year.

Emission factors used to calculate emissions from boilers are shown in Table III-C and were derived as follows:

- For NO_X and CO, the permitted emission limit is expressed in lb/MMBtu heat input and is used directly.

- For VOC, PM/PM_{10}, and SO_2, the emission factor represents an engineering estimate of the emission rate achievable with the control strategy representing BACT.

- For individual organic HAPs, the emission factor is taken from Section 1.4 of the U.S. EPA publication Compilation of Air Pollutant Emission Factors, Volume I: Stationary Point and Area Sources (commonly known as "AP-42").

draft

Table III-C. Boiler Emissions

Emission Point No.	Description	Capacity (MMBtu/hr)	NO_x			SO_2			CO			VOC			PM/PM_{10}		
			lb/MMBtu	lb/hr	ton/year	lb/MMBtu	lb/hr	ton/year	lb/MMBtu	lb/hr	ton/year	lb/MMBtu	lb/hr	ton/year	lb/MMBtu	lb/hr	ton/year
EP-8	Steam Boiler #1	419	0.0125	5.2	23.0	0.0006	0.3	1.1	0.016	6.7	29.4	0.004	1.7	7.3	0.0075	3.1	13.8
EP-9	Steam Boiler #2	419	0.0125	5.2	23.0	0.0006	0.3	1.1	0.016	6.7	29.4	0.004	1.7	7.3	0.0075	3.1	13.8
TOTAL				10.5	45.9		0.5	2.2		13.4	58.8		3.4	14.7		6.3	27.5

Table III-C. Boiler Emissions (Continued)

Emission Point No.	Description	Capacity (MMBtu/hr)	Benzene			Fluoranthene			Formaldehyde		
			lb/MMBtu	lb/hr	ton/year	lb/MMBtu	lb/hr	ton/year	lb/MMBtu	lb/hr	ton/year
EP-8	Steam Boiler #1	419	2.10E-06	8.8E-04	3.9E-03	3.00E-09	1.3E-06	5.5E-06	7.50E-05	3.1E-02	1.4E-01
EP-9	Steam Boiler #2	419	2.10E-06	8.8E-04	3.9E-03	3.00E-09	1.3E-06	5.5E-06	7.50E-05	3.1E-02	1.4E-01
TOTAL				1.8E-03	7.7E-03		2.5E-06	1.1E-05		6.3E-02	2.8E-01

Table III-C. Boiler Emissions (Continued)

Emission Point No.	Description	Capacity (MMBtu/hr)	Naphthalene			Toluene		
			lb/MMBtu	lb/hr	ton/year	lb/MMBtu	lb/hr	ton/year
EP-8	Steam Boiler #1	419	6.1E-07	2.6E-04	1.10E-03	3.4E-06	1.4E-03	6.2E-03
EP-9	Steam Boiler #2	419	6.1E-07	2.6E-04	1.10E-03	3.4E-06	1.4E-03	6.2E-03
TOTAL				5.1E-04	2.2E-03		2.9E-03	1.2E-02

D. Sulfur Recovery Plant

All emissions from the Sulfur Recovery Plant, with the exception of fugitive emissions due to equipment leaks, will be emitted from the stack of the Sulfur Recovery Plant Thermal Oxidizer. This section describes the emissions from the thermal oxidizer. Calculation of equipment leak emissions is presented in Section III.O, below.

Emissions of SO_2 and H_2S from the Sulfur Recovery Plant Thermal Oxidizer are based on the permitted hourly emission limits. The Sulfur Recovery Plant is permitted to operate at maximum heat input capacity, without restriction, on a year-round basis. Thus, annual emissions are calculated assuming the maximum hourly emission rate for 8,760 hours per year.

Emissions of all other pollutants from the Sulfur Recovery Plant Thermal Oxidizer were calculated using emission factors and heat input capacity in the same manner described in Section III.B, above, for process heater emissions.

Emission factors used to calculate emissions from the Sulfur Recovery Plant Thermal Oxidizer are shown in Table III-D and were derived as follows:

- For NO_X, the permitted emission limit is expressed in lb/MMBtu heat input and is used directly.
- The CO, VOC, and PM/PM_{10} emission factors are those for natural gas combustion, as presented in Section 1.4 of AP-42.
- For individual organic HAPs, the emission factors for RFG combustion are taken from the CATEF database.

draft

Table III-D. Sulfur Recovery Plant Emissions

Emission Point No.	Description	Capacity (MMBtu/hr)	SO_2		H_2S		NO_x			CO			VOC			PM/PM_{10}		
			lb/hr	ton/year	lb/hr	ton/year	lb/MMBtu	lb/hr	ton/year	lb/MMBtu	lb/hr	ton/year	lb/MMBtu	lb/hr	ton/year	lb/MMBtu	lb/hr	ton/year
EP-12	Sulfur Recovery Plant Thermal Oxidizer	100	33.6	147.2	0.089	0.39	0.06	6.0	26.3	0.084	8.4	36.8	0.0055	0.6	2.4	0.0076	0.8	3.3

Table III-D. Sulfur Recovery Plant Emissions (Continued)

Emission Point No.	Description	Capacity (MMBtu/hr)	Acetaldehyde			Benzene			Benzo(a)pyrene		
			lb/MMBtu	lb/hr	ton/year	lb/MMBtu	lb/hr	ton/year	lb/MMBtu	lb/hr	ton/year
EP-12	Sulfur Recovery Plant Thermal Oxidizer	100	2.43E-06	2.4E-04	1.1E-03	6.24E-05	6.2E-03	2.7E-02	3.37E-09	3.4E-07	1.5E-06

Table III-D. Sulfur Recovery Plant Emissions (Continued)

Emission Point No.	Description	Capacity (MMBtu/hr)	Chrysene			Fluoranthene			Formaldehyde		
			lb/MMBtu	lb/hr	ton/year	lb/MMBtu	lb/hr	ton/year	lb/MMBtu	lb/hr	ton/year
EP-12	Sulfur Recovery Plant Thermal Oxidizer	100	2.59E-09	2.6E-07	1.1E-06	3.10E-08	3.1E-06	1.4E-05	1.41E-05	1.4E-03	6.2E-03

Table III-D. Sulfur Recovery Plant Emissions (Continued)

Emission Point No.	Description	Capacity (MMBtu/hr)	Naphthalene			Phenol			Toluene		
			lb/MMBtu	lb/hr	ton/year	lb/MMBtu	lb/hr	ton/year	lb/MMBtu	lb/hr	ton/year
EP-12	Sulfur Recovery Plant Thermal Oxidizer	100	1.94E-07	1.9E-05	8.5E-05	8.64E-07	8.6E-05	3.8E-04	8.35E-05	8.4E-03	3.7E-02

E. Group "B" Storage Tanks and Tank Farm Thermal Oxidizer

Emissions from this unit category include the emissions vented directly to the atmosphere from the Group "B" Storage Tanks, the emissions routed from the Group "B" Storage Tanks to the Tank Farm Thermal Oxidizer for partial control, and the emissions generated by the Tank Farm Thermal Oxidizer. As a result, the method of determining the maximum (i.e., worst-case) emission rate differs for individual pollutants and is dependent upon the averaging period. Emission calculations for the storage tanks and the thermal oxidizer are presented separately in Tables III-E-1 through III-E-4, and worst-case emission rates for each pollutant are presented in Table III-E-5. The following paragraphs describe the emission calculations in greater detail.

Hourly uncontrolled VOC emissions from the Group "B" Storage Tanks, both individually and collectively, are presented in Table III-E-1. These emission rates were calculated according to the methodology presented in AP-42 Section 7.1, using the tank parameters and stored liquid properties shown in Table III-E-1.

Hourly uncontrolled organic HAP emissions from the Group "B" Storage Tanks, collectively, are presented in Table III-E-2. These emission rates are calculated using the total uncontrolled VOC emission rate in conjunction with the speciation data shown in Table III-E-2. The benzene concentration value represents a conservative, engineering estimate of benzene concentration in reformulated gasoline and gasoline intermediates. Speciation data for other organic HAP's were presented in the applicant's permit application and represent the gasoline storage tank headspace composition data in U.S. EPA's SPECIATE database.

Emissions from the Group "B" Storage Tanks will be routed to the Tank Farm Thermal Oxidizer for control of VOC and organic HAP emissions during normal operations. However, these emissions will be routed directly to atmosphere during outages of the thermal oxidizer, which is allowable under the proposed permit for up to 240 hours in any one-year period. Thus, for each pollutant that is emitted by the Group "B" Storage Tanks (i.e., VOC, benzene, ethylbenzene, hexane, toluene, and xylene), the worst-case hourly emission rate occurs during thermal oxidizer downtime. These emission rates are presented in Table III-E-5 and are equivalent to the uncontrolled hourly emission rates presented in Tables III-E-1 and III-E-2.

For the pollutants that are emitted by the Group "B" Storage Tanks, the worst-case annual emissions must also take into account the effect of the Tank Farm Thermal Oxidizer. This is true because the worst-case annual emissions would occur if the storage tanks emitted at the uncontrolled hourly rate for 240 hours per year, and with the thermal oxidizer operating for the remaining 8,520 hours per year. The maximum annual emissions occurring during thermal oxidizer downtime are presented in Table III-E-5 and are calculated as follows, using hexane emissions to illustrate:

$$E_{C_6H_{14}} = \left(\frac{1.5 \text{ lb}}{\text{hr}} \times \frac{240 \text{ hr}}{\text{yr}} \times \frac{1 \text{ ton}}{2{,}000 \text{ lbs}} \right) = 0.18 \ \text{ton}/\text{yr}$$

The maximum annual emissions of pollutants that are emitted by the Group "B" Storage Tanks also includes the residual 2 percent of emissions that are routed to the thermal oxidizer, but not destroyed, during the 8,520 hours per year when the thermal oxidizer is operating. (Two percent represents the emissions not controlled, assuming a nominal 98 percent control efficiency.) These emissions are presented in Table III-E-3 and are calculated as follows, using hexane emissions to illustrate:

$$E_{C_6H_{14}} = \left(\frac{1.5 \text{ lb}}{\text{hr}} \times 2\% \times \frac{8{,}520 \text{ hr}}{\text{yr}} \times \frac{1 \text{ ton}}{2{,}000 \text{ lbs}} \right) = 0.12 \ \text{ton}/\text{yr}$$

Three of the pollutants that are emitted by the Group "B" Storage Tanks (i.e., ethylbenzene, hexane, and xylene) are not generated in any appreciable quantity as a result of RFG combustion. For these pollutants, the worst-case annual emission rates are the sum of the values presented in Tables III-E-2 and III-E-3. These emission rates are presented in Table III-E-5 and are calculated as follows, using hexane emissions to illustrate:

$$E_{C_6H_{14}} = 0.18 \ \text{ton}/\text{yr} + 0.12 \ \text{ton}/\text{yr} = 0.30 \ \text{ton}/\text{yr}$$

For the other pollutants that are emitted by the Group "B" Storage Tanks (i.e., VOC, benzene, and toluene), the worst-case annual emission rate presented in Table III-E-5 includes three values: the uncontrolled emissions during thermal oxidizer downtime; the residual 2 percent of emissions that are routed to the thermal oxidizer, but not destroyed, during periods when the thermal oxidizer is operating; and emissions generated by RFG combustion in the thermal oxidizer. The emissions due to RFG combustion are presented in Table III-E-4 and are calculated using emission factors and heat input capacity in the same manner described for process heater emissions in Section III.B, above. These emissions occur only during the 8,520 hours per year when the thermal oxidizer is operating. The emission factors for RFG combustion in the Tank Farm Thermal Oxidizer, as presented in Table III-E-4, are taken from the CATEF database.

Finally, for pollutants that are not emitted by the Group "B" Storage Tanks, the worst-case hourly and annual emission rates are due to RFG combustion in the Tank Farm Thermal Oxidizer. These emission rates are presented in Tables III-E-4 and III-E-5. The hourly emission rates reflect oxidizer operation at maximum heat input capacity, and the annual emission rates are based on continuous operation at maximum capacity for 8,760 hours per year. These emissions are calculated using

draft

emission factors and heat input capacity in the same manner described in Section III.B, above, for process heater emissions. Emission factors used to calculate emissions from the thermal oxidizer are shown in Table III-E-4 and were derived as follows:

- For NO_X, the permitted emission limit is expressed in lb/MMBtu heat input and is used directly.

- For SO_2, the emission factor is calculated using the permitted fuel sulfur limit of 35 ppmv, in the same manner as described above for SO_2 emissions from process heaters.

- The CO, VOC, and PM/PM_{10} emission factors are those for natural gas combustion, as presented in Section 1.4 of AP-42.

- For individual organic HAP's, emission factors for RFG combustion are taken from the CATEF database.

draft

Table III-E-1. Uncontrolled VOC Emissions from Group "B" Storage Tanks

Tank		Volume (gal)	Modeled Vapor Pressure (psia)	Diameter (ft)	Height (ft)	Annual Turnovers	Emissions
ID	Description						lb/hr
T-42215	Isomerization Feed Tank	1,890,000	8.92	90	48	128.9	1.80
T-42217	Reformer Feed Tank	2,835,000	1.69	110	48	103.8	0.40
T-42301	Ethanol Storage Tank	2,835,000	1.04	110	48	31.6	0.15
T-42303	Ether Storage Tank	2,835,000	8.23	110	48	46	6.78
T-42305	Alkylate Storage Tank	945,000	1.69	62	48	30	0.16
T-42306	Alkylate Storage Tank	945,000	1.69	62	48	30	0.16
T-42315	High Octane Reformate Tank	3,780,000	1.69	110	48	54.8	0.37
T-42316	High Octane Reformate Tank	3,780,000	1.69	110	48	54.8	0.37
T-42317	Low Octane Reformate Tank	3,780,000	1.69	110	48	54.8	0.37
T-42318	Low Octane Reformate Tank	3,780,000	1.69	110	48	54.8	0.37
T-42401	Gasoline Product Tank	1,890,000	8.92	90	48	39.7	1.76
T-42402	Gasoline Product Tank	1,890,000	8.92	90	48	39.7	1.76
T-42403	Gasoline Product Tank	1,890,000	8.92	90	48	9.9	1.74
T-42404	Gasoline Product Tank	1,890,000	8.92	90	48	9.9	1.74
T-42405	Gasoline Product Tank	1,890,000	8.92	90	48	79.5	1.78
T-42406	Gasoline Product Tank	1,890,000	8.92	90	48	79.5	1.78
T-42407	Gasoline Product Tank	1,890,000	8.92	90	48	79.5	1.78
T-42408	Gasoline Product Tank	1,890,000	8.92	90	48	79.5	1.78
T-42409	Gasoline Product Tank	1,890,000	8.92	90	48	39.7	1.76
T-42410	Gasoline Product Tank	1,890,000	8.92	90	48	39.7	1.76
T-42501	Jet Product Tank	2,835,000	1.69	110	48	59.9	0.37
T-42502	Jet Product Tank	2,835,000	1.69	110	48	59.9	0.37
T-42503	Jet Product Tank	2,835,000	1.69	110	48	59.9	0.37
T-42505	Diesel Product Tank	1,890,000	0.01	90	48	57.3	0.04
T-42506	Diesel Product Tank	1,890,000	0.01	90	48	57.3	0.04
T-42507	Diesel Product Tank	1,890,000	0.01	90	48	57.3	0.04
T-44051	Vapor Recovery Unit Tank	378,000	8.92	48	32	4.2	0.83
TOTAL							30.61

Draft

Table III-E-2. Uncontrolled Organic HAP Emissions from Group "B" Storage Tanks

VOC Emission Rate (lb/hr)	Benzene		Ethylbenzene		Hexane		Toluene		Xylenes (total)	
	% by weight	lb/hr	% by weight	lb/hr	% by weight	lb/hr	% by weight	lb/hr	% by weight	lb/hr
30.61	0.90	2.8E-01	0.22	6.7E-02	4.78	1.5E+00	2.11	6.5E-01	0.76	2.3E-01

Table III-E-3. Controlled Emissions from Tank Farm Thermal Oxidizer, Originating from Group "B" Storage Tanks

Emission Point No.	Description	Destruction Efficiency (%)	VOC			Benzene			Ethylbenzene		
			uncontrolled lb/hr	controlled lb/hr	controlled tons/year	uncontrolled lb/hr	controlled lb/hr	controlled tons/year	uncontrolled lb/hr	controlled lb/hr	controlled tons/year
EP-16	Tank Farm Thermal Oxidizer	98	30.61	0.61	2.61	2.8E-01	5.5E-03	2.3E-02	6.7E-02	1.3E-03	5.7E-03

Table III-E-3. Controlled Emissions from Tank Farm Thermal Oxidizer, Originating from Group "B" Storage Tanks (Continued)

Emission Point No.	Description	Destruction Efficiency (%)	Hexane			Toluene			Xylenes (total)		
			uncontrolled lb/hr	controlled lb/hr	controlled tons/year	uncontrolled lb/hr	controlled lb/hr	controlled tons/year	uncontrolled lb/hr	controlled lb/hr	controlled tons/year
EP-16	Tank Farm Thermal Oxidizer	98	1.5E+00	2.9E-02	1.2E-01	6.5E-01	1.3E-02	5.5E-02	2.3E-01	4.7E-03	2.0E-02

Table III-E-4. Emissions from Tank Farm Thermal Oxidizer, Due to RFG Combustion

Emission Point No.	Description	Capacity (MMBtu/hr)	NO_x			SO_2			CO			VOC			PM/PM_{10}		
			lb/ MMBtu	lb/hr	ton/ year	lb/ MMBtu	lb/hr	ton/ year	lb/ MMBtu	lb/hr	ton/ year	lb/ MMBtu	lb/hr	ton/ year	lb/ MMBtu	lb/hr	ton/ year
EP-16	Tank Farm Thermal Oxidizer	56.3	0.04	2.3	9.9	0.0058	0.3	1.4	0.084	4.7	20.7	0.0055	0.31	1.32	0.0076	0.4	1.9

Table III-E-4. Emissions from Tank Farm Thermal Oxidizer, Due to RFG Combustion (Continued)

Emission Point No.	Description	Capacity (MMBtu/hr)	H_2S			Benzene			Benzo(a)pyrene		
			lb/MMBtu	lb/hr	ton/year	lb/MMBtu	lb/hr	ton/year	lb/MMBtu	lb/hr	ton/year
EP-16	Tank Farm Thermal Oxidizer	56.3	2.37E-04	1.3E-02	5.8E-02	6.24E-08	3.5E-06	1.5E-05	3.37E-09	1.9E-07	8.3E-07

Table III-E-4. Emissions from Tank Farm Thermal Oxidizer, Due to RFG Combustion (Continued)

Emission Point No.	Description	Capacity (MMBtu/hr)	Formaldehyde			Toluene		
			lb/MMBtu	lb/hr	ton/year	lb/MMBtu	lb/hr	ton/year
EP-16	Tank Farm Thermal Oxidizer	56.3	1.41E-05	7.9E-04	3.5E-03	8.35E-05	4.7E-03	2.1E-02

Table III-E-5. Emissions from Group "B" Storage Tanks and Tank Farm Thermal Oxidizer

Pollutant	Averaging Period	Status of Thermal Oxidizer ("T.O.")	Emissions from Tanks [1]		Emissions from Thermal Oxidizer [2]		Total Emissions	
			Rate	Units	Rate	Units	Rate	Units
SO_2	Hourly	T.O. operating	0.00	lb/hr	0.32	lb/hr	0.32	lb/hr
	Annual	T.O. operating continuously	0.00	tons/yr	1.38	tons/yr	1.38	tons/yr
NO_x	Hourly	T.O. operating	0.00	lb/hr	2.25	lb/hr	2.25	lb/hr
	Annual	T.O. operating continuously	0.00	tons/yr	9.86	tons/yr	9.86	tons/yr
CO	Hourly	T.O. operating	0.00	lb/hr	4.73	lb/hr	4.73	lb/hr
	Annual	T.O. operating continuously	0.00	tons/yr	20.71	tons/yr	20.71	tons/yr
PM/PM_{10}	Hourly	T.O. operating	0.00	lb/hr	0.43	lb/hr	0.43	lb/hr
	Annual	T.O. operating continuously	0.00	tons/yr	1.87	tons/yr	1.87	tons/yr
VOC	Hourly	T.O. off-line	30.61	lb/hr	0.00	lb/hr	30.61	lb/hr
	Annual	T.O. off-line for 240 hours, operating for 8,520 hours	3.67	tons/yr	3.93	tons/yr	7.60	tons/yr
H_2S	Hourly	T.O. operating	0.0E+00	lb/hr	1.3E-02	lb/hr	1.3E-02	lb/hr
	Annual	T.O. operating continuously	0.0E+00	tons/yr	5.8E-02	tons/yr	5.8E-02	tons/yr
Benzene	Hourly	T.O. off-line	2.8E-01	lb/hr	0.0E+00	lb/hr	2.8E-01	lb/hr
	Annual	T.O. off-line for 240 hours, operating for 8,520 hours	3.3E-02	tons/yr	2.5E-02	tons/yr	5.8E-02	tons/yr
Benzo(a)pyrene	Hourly	T.O. operating	0.0E+00	lb/hr	1.9E-07	lb/hr	1.9E-07	lb/hr
	Annual	T.O. operating continuously	0.0E+00	tons/yr	8.3E-07	tons/yr	8.3E-07	tons/yr
Ethylbenzene	Hourly	T.O. off-line	6.7E-02	lb/hr	0.0E+00	lb/hr	6.7E-02	lb/hr
	Annual	T.O. off-line for 240 hours, operating for 8,520 hours	8.0E-03	tons/yr	5.7E-03	tons/yr	1.4E-02	tons/yr
Formaldehyde	Hourly	T.O. operating	0.0E+00	lb/hr	7.9E-04	lb/hr	7.9E-04	lb/hr
	Annual	T.O. operating continuously	0.0E+00	tons/yr	3.5E-03	tons/yr	3.5E-03	tons/yr
Hexane	Hourly	T.O. off-line	1.5E+00	lb/hr	0.0E+00	lb/hr	1.5E+00	lb/hr
	Annual	T.O. off-line for 240 hours, operating for 8,520 hours	1.8E-01	tons/yr	1.2E-01	tons/yr	3.0E-01	tons/yr
Toluene	Hourly	T.O. off-line	6.5E-01	lb/hr	0.0E+00	lb/hr	6.5E-01	lb/hr
	Annual	T.O. off-line for 240 hours, operating for 8,520 hours	7.8E-02	tons/yr	7.6E-02	tons/yr	1.5E-01	tons/yr
Xylenes (total)	Hourly	T.O. off-line	2.3E-01	lb/hr	0.0E+00	lb/hr	2.3E-01	lb/hr
	Annual	T.O. off-line for 240 hours, operating for 8,520 hours	2.8E-02	tons/yr	1.7E-02	tons/yr	4.8E-02	tons/yr

Notes:
1. Includes only emissions occurring directly to the atmosphere, i.e., during T.O. downtime. (See Tables III-E-1 and III-E-2.)
2. Includes emissions that are routed from storage tanks to the T.O. but not destroyed (see Table III-E-3) and emissions from RFG combustion (see Table III-E-4).

Draft

F. Wastewater Treatment Plant

Emission units within the WWTP at the proposed refinery will include the following:

- Four WWTP vessels, including an Oil-Water Separator, a Dissolved Air Flotation Unit, an Equalization Tank, and a Biotreater;
- The WWTP Thermal Oxidizer;
- The WWTP Spray Dryer;
- The WWTP Spray Dryer Heater; and
- Fugitive emissions due to equipment leaks.

This section describes the emissions from the WWTP vessels and the thermal oxidizer. Emissions from the WWTP Spray Dryer Heater are presented in Section III.B, above; emissions from the WWTP Spray Dryer are presented in Section III.L, below; and equipment leak emissions are presented in Section III.O, below.

All emissions from the WWTP vessels will be routed to the WWTP Thermal Oxidizer. Emissions from the thermal oxidizer include both the emissions routed from the WWTP vessels to the thermal oxidizer for partial control, and the emissions generated by the thermal oxidizer. As a result, the method of calculating the emission rate differs for individual pollutants. Emission rates for pollutants generated by the WWTP vessels and the thermal oxidizer are presented separately in Tables III-F-1 and III-F-2, and combined emission rates for each pollutant are presented in Table III-F-3. The following paragraphs describe the emission calculations in greater detail.

Hourly and annual uncontrolled and controlled VOC and benzene emissions from the collection of WWTP vessels are presented in Table III-F-1. These emission rates were calculated based on the conservative assumption that all VOC and benzene removed in the WWTP are routed to the WWTP Thermal Oxidizer as gaseous emissions. Values used in the calculations include a design maximum wastewater capacity of 1,000 gallons per minute; an assumed wastewater density of 8.4 lb/gal; design maximum wastewater VOC and benzene concentrations of 800 ppmw and 40 ppmw, respectively; and a 98 percent destruction efficiency for VOC and benzene emissions routed to the WWTP Thermal Oxidizer, which represents a conservative estimate of the emission reduction achievable when using the control technology representing BACT. The calculation methodology, using hourly VOC emissions to illustrate, is as follows:

draft

$$E_{VOC(unc.)} = \frac{1{,}000 \text{ gal WW}}{\text{min}} \times \frac{8.4 \text{ lb WW}}{\text{gal WW}} \times \frac{60 \text{ min}}{\text{hr}} \times \frac{800 \text{ lb VOC}}{10^6 \text{ lb WW}} = 403.2 \text{ lb/hr}$$

Hourly and annual emission rates due to RFG combustion in the WWTP Thermal Oxidizer are presented in Table III-F-2. The hourly emission rates reflect oxidizer operation at maximum heat input capacity, and the annual emission rates are based on continuous operation at maximum capacity for 8,760 hours per year. These emissions are calculated using emission factors and heat input capacity, in the same manner described for process heater emissions in Section III.B herein. Emission factors used to calculate emissions from the WWTP Thermal Oxidizer are shown in Table III-F-4 and were derived as follows:

- For SO_2, the emission factor is calculated using the permitted fuel sulfur limit of 35 ppmv, in the same manner as described in Section III.B, above, for SO_2 emissions from process heaters.

- The NO_X, CO, VOC, and PM/PM_{10} emission factors are those for natural gas combustion, as presented in Section 1.4 of AP-42.

draft

Table III-F-1. Emissions from WWTP Thermal Oxidizer, Originating from WWTP Vessels

Emission Point No.	Description	Destruction Efficiency (%)	VOC			Benzene		
			uncontrolled lb/hr	controlled lb/hr	controlled tons/year	uncontrolled lb/hr	controlled lb/hr	controlled tons/year
EP-18	WWTP Thermal Oxidizer	98	403.2	8.06	35.32	20.16	0.40	1.77

Table III-F-2. Emissions from WWTP Thermal Oxidizer, Due to RFG Combustion

Emission Point No.	Description	Capacity (MMBtu/hr)	NO_x			SO_2			CO			VOC			PM/PM_{10}		
			lb/ MMBtu	lb/hr	ton/ year	lb/ MMBtu	lb/hr	ton/ year	lb/ MMBtu	lb/hr	ton/ year	lb/ MMBtu	lb/hr	ton/ year	lb/ MMBtu	lb/hr	ton/ year
EP-18	WWTP Thermal Oxidizer	0.334	0.10	0.033	0.146	0.0058	0.002	0.008	0.084	0.028	0.123	0.0055	0.002	0.008	0.0076	0.003	0.011

Table III-F-3. Emissions from WWTP Thermal Oxidizer, Total

Emission Point No.	Description	NO_x		SO_2		CO		VOC		Benzene		PM/PM_{10}	
		lb/hr	ton/year	lb/hr	ton/year	lb/hr	ton/year	lb/hr	ton/year	lb/hr	ton/year	lb/hr	ton/year
EP-18	WWTP Thermal Oxidizer	0.033	0.146	0.002	0.008	0.028	0.123	8.06	35.33	0.40	1.77	0.003	0.011

G. Truck and Rail Car Loading Racks

All emissions from the loading of gasoline and distillate products into trucks and rail cars, with the exception of fugitive emissions due to equipment leaks, will be emitted from the stacks of the loading rack thermal oxidizers. Specifically, emissions from the Gasoline Product Rail Car Loading Racks and the Distillate Product Rail Car Loading Racks will be routed to the Rail Car Loading Rack Thermal Oxidizer and emissions from the Gasoline Product Truck Loading Racks and the Distillate Product Truck Loading Racks will be routed to the Truck Loading Rack Thermal Oxidizer. This section describes the emissions from the thermal oxidizers. Calculation of equipment leak emissions is presented in Section III.O, below.

Emissions from the loading racks include both the emissions routed from the loading racks to the loading rack thermal oxidizers for partial control, and the emissions generated by the thermal oxidizers. As a result, the method of calculating the emission rate differs for individual pollutants. Emission rates for VOC, which is generated by the loading operations and partially controlled in the thermal oxidizers, are presented in Table III-G-1. (Emissions of VOC from gasoline product loading operations will also be partially controlled using regenerative adsorption systems upstream of the thermal oxidizers but, as described below, this does not affect the manner in which VOC emissions are calculated.) Emission rates for pollutants that are generated by combustion of RFG in the thermal oxidizers are presented in Table III-G-2. The following paragraphs describe the emission calculations in greater detail.

Hourly and annual VOC emissions from the loading rack thermal oxidizers are presented in Table III-G-1. These emission rates are based on the permitted emission limits and the design maximum loading rates. Specifically, the emission limits in the proposed permit are expressed in terms of pounds per million gallons of product, with separate factors for loading of gasoline products and distillate products. The method for determining the composite emission limit for a particular thermal oxidizer is presented in the proposed permit and is as follows:

a. VOC Emission Standards

The Permittee shall not cause or allow to be emitted to the atmosphere from the Loading Rack Thermal Oxidizer or the Rail Car Loading Rack Thermal Oxidizer any gases which contain VOC in excess of the following amounts:

(1) 1.25 pounds per million gallons of product loaded at the gasoline product loading racks.

[A.A.C. R18-2-406(A)(4)]

(2) 22.0 pounds per million gallons of product loaded at the distillate product loading racks.

[A.A.C. R18-2-406(A)(4)]

(3) For periods when a loading rack thermal oxidizer is receiving vapors displaced from both gasoline product loading racks and distillate product loading racks, an amount (E_{total}) determined as follows:

$$E_{total} = EL_g V_g + EL_d V_d$$

Where:

E_{total} =	*VOC emission limit, pounds*
EL_g =	*VOC emission limit for gasoline product loading racks, 1.25 pounds per million gallons loaded*
V_g =	*Volume of product loaded at the gasoline loading product racks, millions of gallons*
EL_d =	*VOC emission limit for distillate product loading racks, 22.0 pounds per million gallons loaded*
V_d =	*Volume of product loaded at the gasoline loading product racks, millions of gallons*

[A.A.C. R18-2-406(A)(4)]

Loading rack throughput values used in the VOC emission calculations are presented in Table III-G-1 and were derived as follows:

- The hourly gasoline product throughput value of 1.62 million gallons for each set of loading racks (i.e., the collection of all loading racks served by one thermal oxidizer) is based on a pumping capacity of 600 gallons per minute per loading arm and a total of 45 gasoline product loading arms in each set.

- The hourly distillate product throughput value of 540,000 gallons for each set of loading racks is based on a pumping capacity of 600 gallons per minute per loading arm and a total of 9 distillate product loading arms in each set.

- The annual gasoline product throughput value of 469.5 million gallons for each set of loading racks represents half of the design maximum annual production rate for gasoline products at the proposed refinery, as indicated by the applicant in the permit application.

- The annual distillate product throughput value of 555.5 million gallons for each set of loading racks represents half of the design maximum annual production rate for distillate products at the proposed refinery, as indicated

draft

by the applicant in the permit application.

The calculation methodology for VOC emissions, using hourly VOC emissions from the Truck Loading Rack Thermal Oxidizer to illustrate, is as follows:

$$E_{VOC} = \left(\frac{1.62\ \text{MMgal gasoline}}{\text{hour}} \times \frac{1.25\ \text{lb VOC}}{\text{MMgal gasoline}}\right) + \left(\frac{0.54\ \text{MMgal distillate}}{\text{hour}} \times \frac{22.0\ \text{lb VOC}}{\text{MMgal distillate}}\right) = 13.91\ \text{lb/hr}$$

Hourly and annual emission rates due to RFG combustion in the loading rack thermal oxidizers are presented in Table III-G-2. The hourly emission rates reflect oxidizer operation at maximum heat input capacity, and the annual emission rates are based on continuous operation at maximum capacity for 8,760 hours per year. These emissions are calculated using emission factors and heat input capacity in the same manner described for process heater emissions in Section III.B, above. Emission factors used to calculate emissions from the loading rack thermal oxidizers are shown in Table III-G-2 and were derived as follows:

- For SO_2, the emission factor is calculated using the permitted fuel sulfur limit of 35 ppmv, in the same manner as described above for SO_2 emissions from process heaters.

- The NO_X, CO, and PM/PM_{10} emission factors are those for natural gas combustion, as presented in Section 1.4 of AP-42.

draft

Table III-G-1. VOC Emissions from Loading Rack Thermal Oxidizers

Emission Point No.	Description	Averaging Period	Gasoline Product Loading Rack			Distillate Product Loading Rack			VOC Emissions from all Loading Racks (lb/hr or ton/yr)
			Throughput (MMgal)	Emission Limit (lb/MMgal)	Emission Rate (lb/hr or ton/yr)	Throughput (MMgal)	Emission Limit (lb/MMgal)	Emission Rate (lb/hr or ton/yr)	
EP-17	Truck Loading Rack Thermal Oxidizer								
		Hourly	1.62	1.25	2.03	0.54	22.0	11.88	13.91
		Annual	469.5	1.25	0.29	555.5	22.0	6.11	6.40
EP-27	Rail Car Loading Rack Thermal Oxidizer								
		Hourly	1.62	1.25	2.03	0.54	22.0	11.88	13.91
		Annual	469.5	1.25	0.29	555.5	22.0	6.11	6.40
Total for Both Loading Rack Thermal Oxidizers									
		Hourly	3.24	1.25	4.05	1.08	22.0	23.76	27.81
		Annual	939	1.25	0.59	1,111	22.0	12.22	12.81

Table III-G-2. Emissions from Loading Rack Thermal Oxidizers, Due to RFG Combustion

Emission Point No.	Description	Capacity (MMBtu/hr)	NO_x			SO_2			CO			PM/PM_{10}		
			lb/MMBtu	lb/hr	ton/year	lb/MMBtu	lb/hr	ton/year	lb/MMBtu	lb/hr	ton/year	lb/MMBtu	lb/hr	ton/year
EP-17	Truck Loading Rack Thermal Oxidizer	12.33	0.10	1.23	5.40	0.0058	0.07	0.31	0.084	1.04	4.54	0.0076	0.09	0.41
EP-27	Rail Car Loading Rack Thermal Oxidizer	12.33	0.10	1.23	5.40	0.0058	0.07	0.31	0.084	1.04	4.54	0.0076	0.09	0.41
TOTAL				2.47	10.80		0.14	0.62		2.07	9.07		0.19	0.82

H. Group "C" Storage Tanks

The Group "C" Storage Tanks are the tanks equipped with external floating roofs at the proposed refinery. Hourly and annual VOC and benzene emissions from these tanks, both individually and collectively, are presented in Table III-H-1. The VOC emission rates were calculated according to the methodology presented in AP-42 Section 7.1, using the tank parameters and stored liquid properties shown in Table III-H-1. The hourly and annual benzene emission rates were calculated using the corresponding VOC emission rates in conjunction with the benzene concentration data shown in Table III-H-1. The benzene concentration data were derived from Table 6-7 of the U.S. EPA publication "Locating and Estimating Air Emissions from Sources of Benzene" (EPA-454/R-98-011), June 1998.

Hourly and annual emissions of other organic HAP's from the Group "C" Storage Tanks are presented in Table III-H-2. These emission rates were calculated using the hourly and annual VOC emission rates from Table III-H-1 in conjunction with the speciation data shown in Table III-H-2. The speciation data were derived as follows:

- The data for hexane and toluene in crude oil were presented in the applicant's permit application and were derived from the storage tank headspace composition data for crude oil storage tanks as presented in U.S. EPA's SPECIATE database.

- The data for ethylbenzene and xylene in crude oil were derived from the crude oil composition data presented in the CATEF database.

- The data for organic HAP's in other Group "C" Storage Tanks were presented in the applicant's permit application and were derived from the storage tank headspace composition data for gasoline storage tanks as presented in U.S. EPA's SPECIATE database.

draft

Table III-H-1. VOC and Benzene Emissions from Group "C" Storage Tanks

Tank		Volume (gal)	Diameter (ft)	Height (ft)	Annual Turnovers	Modeled Vapor Pressure (psia)	VOC Emissions		Benzene Concentration (% by weight)	Benzene Emissions	
ID	Description						lb/hr	ton/yr		lb/hr	ton/yr
T-42101	Crude Oil Tank	7,560,000	175	48	56.2	3.74	0.94	3.2	0.45	4.2E-03	1.4E-02
T-42102	Crude Oil Tank	7,560,000	175	48	56.2	3.74	0.94	3.2	0.45	4.2E-03	1.4E-02
T-42103	Crude Oil Tank	7,560,000	175	48	56.2	3.74	0.94	3.2	0.45	4.2E-03	1.4E-02
T-42104	Crude Oil Tank	7,560,000	175	48	19.6	3.74	0.77	2.4	0.45	3.5E-03	1.1E-02
T-42105	Crude Oil Tank	7,560,000	175	48	19.6	3.74	0.77	2.4	0.45	3.5E-03	1.1E-02
T-42106	Crude Oil Tank	7,560,000	175	48	32	3.74	0.83	2.7	0.45	3.7E-03	1.2E-02
T-42107	Crude Oil Tank	7,560,000	175	48	32	3.74	0.83	2.7	0.45	3.7E-03	1.2E-02
T-42201	Naphtha Hydrotreater Feed Tank	3,780,000	125	48	117.7	4.57	2.58	7.7	1.24	3.2E-02	9.5E-02
T-42205	Distillate Hydrotreater Feed Tank	2,835,000	110	48	48.7	1.69	0.92	2.8	0.01	7.4E-05	2.2E-04
T-42206	Distillate Hydrotreater Feed Tank	2,835,000	110	48	48.7	1.69	0.92	2.8	0.01	7.4E-05	2.2E-04
T-42207	Distillate Hydrotreater Feed Tank	2,835,000	110	48	43.3	1.69	0.92	2.8	0.01	7.4E-05	2.2E-04
T-42208	Distillate Hydrotreater Feed Tank	2,835,000	110	48	43.3	1.69	0.92	2.8	0.01	7.4E-05	2.2E-04
T-42209	Hydrocracker Feed Tank	3,780,000	125	48	81.1	4.57	2.56	7.6	0.10	2.6E-03	7.6E-03
T-42210	Hydrocracker Feed Tank	3,780,000	125	48	81.1	4.57	2.56	7.6	0.10	2.6E-03	7.6E-03
T-43001	Gas Oil Flushing Oil Tank	756,000	60	40	67.3	4.57	1.94	5.7	0.10	1.9E-03	5.7E-03
T-43002	Diesel Flushing Oil Tank	1,512,000	80	48	60.8	0.01	0.04	0.2	0.01	3.1E-06	1.3E-05
T-43011	Straight Run Slop Oil Tank [3]	756,000	60	40	20	4.57	1.92	5.6	1.21	2.3E-02	6.8E-02
T-43012	Straight Run Slop Oil Tank [3]	756,000	60	40	20	4.57	1.92	5.6	1.21	2.3E-02	6.8E-02
T-43013	Cracked Slop Oil Tank [3]	378,000	48	32	20	4.57	1.81	5.3	1.09	2.0E-02	5.7E-02
T-43014	Cracked Slop Oil Tank [3]	378,000	48	32	20	4.57	1.81	5.3	1.09	2.0E-02	5.7E-02
TOTAL							26.87	81.3		1.5E-01	4.6E-01

Table III-H-2. Other Organic HAP Emissions from Group "C" Storage Tanks

Tank Category	Averaging Period	VOC Emission Rate (lb/hr or tons/yr)	Ethylbenzene		Hexane		Toluene		Xylene	
			% by weight	lb/hr or tons/yr	% by weight	lb/hr or tons/yr	% by weight	lb/hr or tons/yr	% by weight	lb/hr or tons/yr
Crude Oil Storage Tanks										
	Hourly	6.03	0.15	9.0E-03	5.10	3.1E-01	1.40	8.4E-02	0.18	1.1E-02
	Annual	19.8	0.15	3.0E-02	5.10	1.0E+00	1.40	2.8E-01	0.18	3.5E-02
Other Group "C" Storage Tanks										
	Hourly	20.84	0.22	4.6E-02	4.78	1.0E+00	2.11	4.4E-01	0.76	1.6E-01
	Annual	61.5	0.22	1.4E-01	4.78	2.9E+00	2.11	1.3E+00	0.76	4.7E-01
All Group "C" Storage Tanks										
	Hourly	26.87		5.5E-02		1.3E+00		5.2E-01		1.7E-01
	Annual	81.3		1.7E-01		3.9E+00		1.6E+00		5.0E-01

I. Sour Water Tank

The Sour Water Tank will be a source of H_2S emissions due to the presence of H_2S in the liquid stored in this tank. The H_2S emission rates from the internal floating roof storage tank, prior to the application of the carbon adsorption system, were calculated according to the methodology presented in AP-42 Section 7.1, using the tank parameters and stored liquid properties shown in Table III-I-1.

The maximum actual hourly and annual H_2S emissions from the Sour Water Tank are calculated using a conservatively assumed 95 percent control efficiency, reflecting the minimum design control efficiency, for the carbon adsorption system. (Five percent represents the emissions not controlled, assuming a nominal 95 percent control efficiency.) These emissions also are presented in Table III-I-1 and are calculated as follows:

$$E_{H_2S} = \left(\frac{11\ \text{lb}}{\text{yr}} \times 5\% \right) = 0.55\ \text{lb}/\text{yr}$$

draft

Table III-I-1. H_2S Emissions from Sour Water Tank

Tank		Volume (gal)	Diameter (ft)	Height (ft)	Annual Turnovers	H_2S Liquid Concentration (ppmw)	Modeled H_2S Vapor Pressure (psia)	Uncontrolled H_2S Emissions		Control Efficiency (%)	Controlled H_2S Emissions	
ID	Description							lb/hr	lb/yr		lb/hr	lb/yr
T-11100	Sour Water Tank	3,780,000	110	48	365	4,000	0.00011	0.001	11	95	0.0001	0.55

J. Emergency Flares

Emissions of all pollutants from the emergency flares were calculated using emission factors and heat input rates (from pilot gas and purge gas) in the same manner described in Section III.B, above, for process heater emissions.

Emission factors and heat input rates used to calculate emissions from the emergency flares are shown in Table III-J. Both emergency flares are expected to operate continuously on a year-round basis. Thus, annual emissions are calculated assuming the hourly emission rate for 8,760 hours per year.

Emission factors used to calculate emissions from the emergency flares were derived from Section 13.5 of AP-42.

draft

Table III-J. Emergency Flare Emissions

Emission Point No.	Description	Heat Input Rate (MMBtu/hr)	NO_x			SO_2			CO			VOC		
			lb/MMBtu	lb/hr	ton/year	lb/MMBtu	lb/hr	ton/year	lb/MMBtu	lb/hr	ton/year	lb/MMBtu	lb/hr	ton/year
EP-13	Emergency Flare #1	0.83	0.068	0.06	0.25	0.0006	5.3E-04	2.3E-03	0.37	0.31	1.35	0.063	0.05	0.23
EP-21	Emergency Flare #2	0.83	0.068	0.06	0.25	0.0006	5.3E-04	2.3E-03	0.37	0.31	1.35	0.063	0.05	0.23
TOTAL				0.11	0.50		1.1E-03	4.6E-03		0.62	2.70		0.10	0.46

K. Coke Silo Baghouse

Exhaust gases from the Coke Silo will be routed to the Coke Silo Baghouse for control of particulate matter emissions.

Hourly particulate matter emissions from the Coke Silo Baghouse were calculated as the product of the permitted maximum exhaust gas particulate matter concentration (i.e., "grain loading") and the design maximum exhaust gas flow rate. This calculation is as follows:

$$E_{PM} = \frac{\left(2{,}188\ \frac{dscf}{min}\right) \times \left(0.005\ \frac{gr}{dscf}\right) \times \left(60\ \frac{min}{hr}\right)}{\left(7{,}000\ \frac{gr}{lb}\right)} = 0.09\ {}^{lb}\!/_{hr}$$

The Coke Silo is permitted to operate at maximum capacity, without restriction, on a year-round basis. Thus, annual emissions from the Coke Silo Baghouse are calculated assuming the hourly emission rate for 8,760 hours per year, as follows:

$$E_{PM} = \frac{\left(0.09\ \frac{lb}{hr}\right) \times \left(8{,}760\ \frac{hr}{yr}\right)}{\left(2{,}000\ \frac{lb}{ton}\right)} = 0.41\ {}^{ton}\!/_{yr}$$

draft

L. Spray Dryer Baghouse

Exhaust gases from the WWTP Spray Dryer will be routed to the Spray Dryer Baghouse for control of particulate matter emissions.

Hourly particulate matter emissions from the Spray Dryer Baghouse were calculated as the product of the permitted maximum exhaust gas particulate matter concentration (i.e., "grain loading") and the design maximum exhaust gas flow rate. This calculation is as follows:

$$E_{PM} = \frac{\left(27{,}228\ \frac{dscf}{min}\right) \times \left(0.005\ \frac{gr}{dscf}\right) \times \left(60\ \frac{min}{hr}\right)}{\left(7{,}000\ \frac{gr}{lb}\right)} = 1.17\ {}^{lb}\!/_{hr}$$

The WWTP Spray Dryer is permitted to operate at maximum capacity, without restriction, on a year-round basis. Thus, annual emissions from the Spray Dryer Baghouse are calculated assuming the hourly emission rate for 8,760 hours per year, as follows:

$$E_{PM} = \frac{\left(1.17\ \frac{lb}{hr}\right) \times \left(8{,}760\ \frac{hr}{yr}\right)}{\left(2{,}000\ \frac{lb}{ton}\right)} = 5.11\ {}^{ton}\!/_{yr}$$

draft

M. Catalyst Regenerators

There are two catalyst regenerators at the proposed refinery, one at the Catalytic Reforming Unit and one at the Butane Conversion Unit. Hourly and annual emissions from these catalyst regenerators are presented in Table III-M.

The applicant has indicated that the catalyst regenerators are similar to one another and, as shown in Table III-M, the estimated emission rates for both catalyst regenerators are identical. The pollutants emitted by each catalyst regenerator include CO, NO_X, perchloroethylene, hydrogen chloride, and chlorine. Two different emission calculation methodologies are needed to calculate the emission rates. These methodologies are described in more detail in the following paragraphs.

Emissions of CO, NO_X, perchloroethylene, and hydrogen chloride are based on design maximum exhaust gas flow rates and pollutant concentrations. The exhaust gas CO and NO_X concentrations for both catalyst regenerators are based on information provided by the applicant in the permit application. The Catalytic Reforming Unit Catalyst Regenerator exhaust gas perchloroethylene and hydrogen chloride concentrations of 20 ppmv and 10 ppmv, respectively, are based on the permitted maximum concentrations. The perchloroethylene and hydrogen chloride concentrations in the Butane Conversion Unit Catalyst Regenerator exhaust, while not subject to the same emission limits, were assumed by the Department to be the same due to the similarities between this unit and the Catalytic Reforming Unit Catalyst Regenerator.

A material balance was used to estimate hourly and annual emissions of chlorine. These material balance calculations were performed by the applicant, and only the resulting emission rates (as shown in Table III-M) were presented in the permit application. Emissions of chlorine from the catalyst regenerators are not subject to any applicable regulations, and the Department is not aware of any published emission data for this type of emission unit. The Department performed engineering calculations and determined that the chlorine emission rates presented by the applicant represent an exhaust gas concentration of approximately 10 ppmv. The Department judges this to be a conservative estimate of the level that is achievable, considering that each of the catalyst regenerators will be equipped with a caustic scrubber.

The exhaust gas flow rates and pollutant concentrations used in calculating hourly CO, NO_X, hydrogen chloride, and perchloroethylene emission rates from the catalyst regenerators are presented in Table III-M. Both catalyst regenerators are permitted to operate at maximum capacity, without restriction, on a year-round basis. Thus, annual emissions are calculated assuming the hourly emission rate for 8,760 hours per year. Other values required for the emission rate calculations are a physical constant of 385.55 standard cubic feet per pound-mole of gas and the molecular weight of each pollutant. These molecular weights are as follows: 28 pounds per pound-mole for CO; 46 pounds per pound-mole for NO_X; 36.5 pounds per pound-

mole for hydrogen chloride; and166 pounds per pound-mole for perchloroethylene. The calculation of an hourly emission rate, using the CO emission rate to illustrate, is as follows:

$$E_{CO} = \frac{\left(\frac{200\ \text{lb}\cdot\text{mol CO}}{10^6\ \text{lb}\cdot\text{mol exhaust}}\right) \times \left(\frac{28\ \text{lb CO}}{\text{lb}\cdot\text{mol CO}}\right)}{\left(\frac{385.55\ \text{scf exhaust}}{\text{lb}\cdot\text{mol exhaust}}\right)} \times \left(575\ \frac{\text{scf exhaust}}{\text{min}}\right) \times \left(60\ \frac{\text{min}}{\text{hr}}\right) = 0.50\ \text{lb/hr}$$

draft

Table III-M. Catalyst Regenerator Emissions

Emission Point No.	Description	Exhaust Flow Rate (scfm)	Chlorine		Hydrogen Chloride			Perchloroethylene			CO			NO_x		
			lb/hr	ton/year	ppmv	lb/hr	ton/year	ppmv	lb/hr	ton/year	ppmv	lb/hr	ton/year	ppmv	lb/hr	ton/year
EP-11	Catalytic Reforming Unit Catalyst Regenerator	575	0.06	0.26	10	0.033	0.14	20	0.30	1.30	200	0.50	2.20	200	0.82	3.61
EP-22	Butane Conversion Unit Catalyst Regenerator	575	0.06	0.26	10	0.033	0.14	20	0.30	1.30	200	0.50	2.20	200	0.82	3.61
TOTAL			0.12	0.52		0.065	0.29		0.60	2.60		1.00	4.40		1.65	7.22

N. Cooling Tower

Emissions from the cooling tower include particulate matter, VOC, and benzene. Particulate matter emissions occur due to liquid drift from the tower. Emissions of VOC and benzene could occur due to evaporation from the tower if leaking heat exchangers within refinery process units caused these pollutants to be captured within the cooling water system. Hourly and annual emissions from the cooling tower are presented in Table III-N, and the methods used to determine these emission rates are described in the following paragraphs.

Emissions of VOC from the cooling tower were calculated as the product of the permitted maximum cooling water flow rate of 80,000 gallons per minute and an emission factor of 0.7 pounds per million gallons of cooling water flow. This emission factor is derived from Section 5.1 of AP-42. The hourly VOC emission rate calculation is as follows:

$$E_{VOC} = \left(80{,}000\ \frac{\text{gal}}{\text{min}}\right) \times \left(60\ \frac{\text{min}}{\text{hr}}\right) \times \left(\frac{0.7\ \text{lb}}{10^6\ \text{gal}}\right) = 3.36\ \text{lb/hr}$$

Hourly particulate matter emissions from the cooling tower, as shown in Table III-N, are based on the PM emission limit of 1.6 lb/hr included in the proposed permit. This value was calculated using the maximum cooling water flow rate of 80,000 gallons per minute, a water density of 8.3 pounds per gallon, a total suspended solids (TSS) concentration of 8,000 ppmw, and a drift rate of 0.0005 percent. This calculation is as follows:

$$E_{PM} = \left(80{,}000\ \frac{\text{gal}}{\text{min}}\right) \times \left(8.3\ \frac{\text{lb } H_2O}{\text{gal}}\right) \times \left(60\ \frac{\text{min}}{\text{hr}}\right) \times \left(\frac{0.008\ \text{lb TSS}}{\text{lb } H_2O}\right) \times \left(\frac{0.000005\ \text{lb PM}}{\text{lb TSS}}\right) = 1.6\ \text{lb/hr}$$

The Cooling Tower is permitted to operate at maximum capacity, without restriction, on a year-round basis. Thus, annual emissions from the Cooling Tower are calculated assuming the hourly emission rate for 8,760 hours per year. This calculation is as follows, using annual particulate matter emissions to illustrate:

$$E_{PM} = \frac{\left(1.6\ \frac{\text{lb}}{\text{hr}}\right) \times \left(8{,}760\ \frac{\text{hr}}{\text{yr}}\right)}{\left(2{,}000\ \frac{\text{lb}}{\text{ton}}\right)} = 7.01\ \text{ton/yr}$$

Hourly and annual emissions of benzene from the cooling tower were calculated using the corresponding VOC emission rate in conjunction with an assumed benzene concentration of 1.21 percent by weight in the VOC contained in cooling water. The benzene concentration value represents a conservative estimate of the benzene concentration of typical light liquid streams within the proposed refinery and were derived from Table 6-6 of the U.S. EPA publication "Locating and Estimating Air Emissions from Sources of Benzene" (EPA-454/R-98-011), June 1998. The calculation of benzene emissions, using the hourly benzene emission rate, is as follows:

Draft

$$E_{C_6H_6} = \left(3.36\ \frac{\text{lb VOC}}{\text{hr}}\right) \times \left(0.0121\ \frac{\text{lb } C_6H_6}{\text{lb VOC}}\right) = 0.041\ \text{lb}/\text{hr}$$

draft

Table III-N. Cooling Tower Emissions

Emission Point No.	Description	Cooling Water Flow Rate (gal/min)	PM		VOC			Benzene		
			lb/hr	ton/year	lb/MMgal	lb/hr	ton/year	% by weight in VOC	lb/hr	ton/year
EP-V1	Cooling Tower	80,000	1.6	7.01	0.7	3.36	14.7	1.21	0.04	0.18

O. Equipment Leaks

Fugitive emissions of VOC, organic HAPs, and H_2S will occur due to leaking piping components and other equipment (e.g., screwed and flanged connectors, valves, pumps, and compressors) at the proposed refinery. Emissions from equipment leaks are summarized in Table III-O-1.

Table III-O-1. Emissions from Equipment Leaks

Pollutant	Hourly Emissions (lb/hr)	Annual Emissions (tons/yr)
VOC	16.8	13.2
H_2S	0.27	1.22
Benzene	0.14	0.11
Ethylbenzene	0.04	0.03
Hexane	0.80	0.63
Toluene	0.35	0.28
Xylenes (total)	0.13	0.10

All emissions from equipment leaks were calculated using the "EPA Correlation Approach" set forth in the U.S. EPA document Protocol for Equipment Leak Emission Estimates (EPA-453/R-95-017), November 1995. This approach uses exponential equations based on the results of extensive studies quantifying and correlating petroleum refinery component leak concentrations and mass emission rates. These equations are designed to predict the mass emission rate from a component based on the VOC concentration, as measured by U.S. EPA Reference Method 21, at the leak interface. (All subsequent references to concentration within this section refer to the pollutant concentration on this basis.) In addition to the exponential equations, the EPA Correlation Approach includes emission rates for components with zero VOC concentration at the leak interface. These "default zero" emission rates are small, but are larger than would be predicted by the correlation equations, and are based on study data showing non-zero mass emission rates from components with VOC concentration below the method detection limit. The correlation equations and default zero emission rates are presented in Table III-O-2.

Draft

Table III-O-2. Petroleum Refinery Equipment Leak Correlation Equations

Equipment type	Correlation Equation (kg/hr/component)	Default Zero (kg/hr/component)
Valves	$2.29E\text{-}06 \times (C_{VOC})^{0.746}$	7.8E-06
Pump seals	$5.03E\text{-}05 \times (C_{VOC})^{0.610}$	2.4E-05
Compressor seals	$2.20E\text{-}06 \times (C_{VOC})^{0.704}$	4.0E-06
Flanges	$4.61E\text{-}06 \times (C_{VOC})^{0.703}$	3.1E-07

The proposed permit defines a leaking component, or "leaker," as a component that emits VOC at such a rate that the concentration, as measured by U.S. EPA Reference Method 21, exceeds a specified level. For valves and connectors in gas/vapor service and light liquid service, the concentration is 100 ppmv; for all other component types, the concentration is 500 ppmv or greater. Estimates of maximum hourly emissions of VOC from equipment leaks were based on the conservative assumption that 2 percent of all components in VOC service (e.g., pumps and valves) are leakers and 98 percent are non-leakers. Each leaker was conservatively assumed to be emitting at an equivalent concentration of 10,000 ppmv. Forty-eight percent of the components (i.e., roughly half of the non-leakers) were conservatively assumed to be emitting at an equivalent concentration equal to that at which they would be considered leakers. The remaining 50 percent of the components were assumed to be emitting at the default zero emission rate. Hourly VOC emission rates for each process unit at the proposed refinery, along with the component counts and emission factors used to calculate them, are presented in Table III-O-3. The component counts are presented separately, as provided by the applicant, for equipment in gas/vapor ("VAP") service, light hydrocarbon liquid ("LHC") service, and heavy hydrocarbon liquid ("HHC") service. The calculation procedure is as follows, using hourly VOC emissions from valves in gas/vapor service in the Atmospheric Distillation section of the Crude Unit (Unit 1) to illustrate:

$$E_0 = (427 \text{ valves} \times 50\%) \times \left(\left(\frac{7.8}{10^6}\right) \frac{\text{kg VOC}}{\text{hr} \cdot \text{valve}}\right) \times \left(\frac{2.2 \text{ lb VOC}}{\text{kg VOC}}\right) = 0.00367 \frac{\text{lb VOC}}{\text{hr}}$$

$$E_{100} = (427 \text{ valves} \times 48\%) \times \left(\left(\frac{2.29}{10^6} \times 100^{0.746}\right) \frac{\text{kg VOC}}{\text{hr} \cdot \text{valve}}\right) \times \left(\frac{2.2 \text{ lb VOC}}{\text{kg VOC}}\right) = 0.0321 \frac{\text{lb VOC}}{\text{hr}}$$

$$E_{10,000} = (427 \text{ valves} \times 2\%) \times \left(\left(\frac{2.29}{10^6} \times 10{,}000^{0.746}\right) \frac{\text{kg VOC}}{\text{hr} \cdot \text{valve}}\right) \times \left(\frac{2.2 \text{ lb VOC}}{\text{kg VOC}}\right) = 0.0415 \frac{\text{lb VOC}}{\text{hr}}$$

$$E_{VOC} = E_0 + E_{100} + E_{10,000} = 0.00367 + 0.0321 + 0.0415 = 0.0773 \frac{\text{lb VOC}}{\text{hr}}$$

Annual VOC emissions from equipment leaks were calculated in the same manner as hourly VOC emissions, with different and less conservative assumptions regarding the percentage of leakers. Specifically, annual emissions of VOC from equipment leaks were based on the conservative assumption that 0.3 percent of valves and connectors in gas/vapor service and light liquid service are leakers, reflecting an enforceable limit in the proposed permit, and 99.7 percent are non-leakers. For all other component types, 1 percent are assumed to be leakers and 99 percent non-leakers. Each leaking component, regardless of type and service, was conservatively assumed to be emitting at an equivalent concentration of 10,000 ppmv (i.e., 20 to 100 times the leak definition level). Ninety-nine percent of compressors, 49.5 percent of pumps in light hydrocarbon service, and one percent of all other component types were conservatively assumed to be emitting at an equivalent concentration equal to that at which they would be considered leakers. All remaining components were assumed to be emitting at the default zero emission rate. Annual VOC emission rates for each process unit at the proposed refinery, along with the component counts and emission factors used to calculate them, are presented in Table III-O-4. The component counts are presented separately, as provided by the applicant, for equipment in gas/vapor ("VAP") service, light hydrocarbon liquid ("LHC") service, and heavy hydrocarbon liquid ("HHC") service.

Hourly and annual H_2S emissions from equipment leaks were calculated in the same manner as VOC emissions, but again with slightly different assumptions regarding the percentage of leakers and the H_2S concentration at leakers. Specifically, both hourly and annual emissions of H_2S from equipment leaks were based on the conservative assumption that 0.5 percent of all components in H_2S service are leakers, and 99.5 percent are non-leakers. The number of assumed leakers in H_2S service is smaller than the number of assumed leakers in VOC service because H_2S is both extremely toxic and easily detectable through olfactory senses, thus, leaking equipment in H_2S service will be more readily detected. For both hourly and annual H_2S emission calculations, 49.5 percent of the components (i.e., roughly half of the non-leakers) were conservatively assumed to be emitting at an equivalent concentration of 500 ppmv, and another 50 percent of components (i.e., the remaining non-leakers) were assumed to be emitting at the default zero emission rate. For the purpose of calculating hourly emissions, each leaker was assumed to be emitting at an equivalent concentration of 5,000 ppmv, while for annual emissions,

Draft

each leaker was assumed to be emitting at an equivalent concentration of 2,500 ppmv. The assumed equivalent concentrations for leakers in H_2S service are lower than the corresponding concentrations for leakers in VOC service because equipment in H_2S service will contain process fluids that contain H_2S in concentrations substantially less than 100 percent, whereas most equipment in VOC service will contain fluids that are nearly 100 percent VOC. Hourly and annual H_2S emission rates, along with the component counts and emission factors used to calculate them, are presented in Tables III-O-5 and III-O-6, respectively.

Hourly and annual benzene emissions from equipment leaks were calculated by applying process unit-specific benzene concentration data to the hourly and annual VOC emission rates presented in Tables III-O-3 and III-O-4, respectively. The benzene concentration data were derived from Tables 6-6 and 6-7 of the U.S. EPA publication "Locating and Estimating Air Emissions from Sources of Benzene" (EPA-454/R-98-011), June 1998. Hourly and annual benzene emission rates, and the process unit-specific benzene concentration values used to calculate them, are presented in Table III-O-7.

Hourly and annual emissions of other organic HAPs from equipment leaks were calculated by applying generalized petroleum refinery speciation data to the hourly and annual VOC emission rates presented in Tables III-O-3 and III-O-4, respectively. The speciation data for other organic HAP's were presented in the applicant's permit application and represent the gasoline storage tank headspace composition data in U.S. EPA's SPECIATE database. Hourly and annual emission rates for other organic HAPs, and the speciation data used to calculate them, are presented in Table III-O-8.

draft

Table III-O-3. Hourly VOC Emissions from Equipment Leaks												
			Default Zero			Leaking @ 100/500 ppmv			Leaking @ 10,000 ppmv			Total VOC Emission Rate (lb/hr)
Component	Service	Total Quantity	Quantity	Emission Factor (lbVOC/hr/ component)	VOC Emission Rate (lb/hr)	Quantity	Emission Factor (lbVOC/hr/ component)	VOC Emission Rate (lb/hr)	Quantity	Emission Factor (lbVOC/hr/ component)	VOC Emission Rate (lb/hr)	
Unit 1 - Atmospheric Distillation												
Valves	VAP	427	213	1.72E-05	3.67E-03	205	1.57E-04	3.21E-02	9	4.87E-03	4.15E-02	
	LHC	1182	591	1.72E-05	1.02E-02	567	1.57E-04	8.89E-02	24	4.87E-03	1.15E-01	
	HHC	1280	640	1.72E-05	1.10E-02	614	5.21E-04	3.20E-01	26	4.87E-03	1.25E-01	
Flanges	VAP	288	144	6.83E-07	9.83E-05	138	2.59E-04	3.58E-02	6	6.59E-03	3.79E-02	
	LHC	797	398	6.83E-07	2.72E-04	383	2.59E-04	9.90E-02	16	6.59E-03	1.05E-01	
	HHC	863	432	6.83E-07	2.95E-04	414	8.02E-04	3.33E-01	17	6.59E-03	1.14E-01	
Pumps	LHC	9	5	5.29E-05	2.40E-04	4	4.91E-03	2.14E-02	0	3.05E-02	5.54E-03	
	HHC	10	5	5.29E-05	2.60E-04	5	4.91E-03	2.32E-02	0	3.05E-02	6.00E-03	
Compressors	VAP	1	1	8.82E-06	4.41E-06	0	3.85E-04	1.85E-04	0	3.18E-03	6.35E-05	
Subtotal					2.60E-02			9.53E-01			5.50E-01	1.53E+00

Table III-O-3. Hourly VOC Emissions from Equipment Leaks												
			Default Zero			Leaking @ 100/500 ppmv			Leaking @ 10,000 ppmv			Total VOC Emission Rate (lb/hr)
Component	Service	Total Quantity	Quantity	Emission Factor (lbVOC/hr/ component)	VOC Emission Rate (lb/hr)	Quantity	Emission Factor (lbVOC/hr/ component)	VOC Emission Rate (lb/hr)	Quantity	Emission Factor (lbVOC/hr/ component)	VOC Emission Rate (lb/hr)	
Unit 2 - Vacuum Distillation												
Valves	VAP	113	56	1.72E-05	9.70E-04	54	1.57E-04	8.49E-03	2	4.87E-03	1.10E-02	
	LHC	88	44	1.72E-05	7.59E-04	42	1.57E-04	6.64E-03	2	4.87E-03	8.59E-03	
	HHC	585	293	1.72E-05	5.03E-03	281	5.21E-04	1.46E-01	12	4.87E-03	5.70E-02	
Flanges	VAP	80	40	6.83E-07	2.72E-05	38	2.59E-04	9.89E-03	2	6.59E-03	1.05E-02	
	LHC	62	31	6.83E-07	2.13E-05	30	2.59E-04	7.74E-03	1	6.59E-03	8.21E-03	
	HHC	413	207	6.83E-07	1.41E-04	198	8.02E-04	1.59E-01	8	6.59E-03	5.45E-02	
Pumps	LHC	1	0	5.29E-05	1.92E-05	0	4.91E-03	1.71E-03	0	3.05E-02	4.44E-04	
	HHC	5	2	5.29E-05	1.27E-04	2	4.91E-03	1.14E-02	0	3.05E-02	2.94E-03	
Compressors	VAP	2	1	8.82E-06	8.82E-06	1	3.85E-04	3.70E-04	0	3.18E-03	1.27E-04	
Subtotal					7.11E-03			3.52E-01			1.53E-01	5.12E-01

Table III-O-3. Hourly VOC Emissions from Equipment Leaks												
			Default Zero			Leaking @ 100/500 ppmv			Leaking @ 10,000 ppmv			Total VOC Emission Rate (lb/hr)
Component	Service	Total Quantity	Quantity	Emission Factor (lbVOC/hr/ component)	VOC Emission Rate (lb/hr)	Quantity	Emission Factor (lbVOC/hr/ component)	VOC Emission Rate (lb/hr)	Quantity	Emission Factor (lbVOC/hr/ component)	VOC Emission Rate (lb/hr)	
Unit 3 - Gas Plant												
Valves	VAP	161	81	1.72E-05	1.39E-03	77	1.57E-04	1.21E-02	3	4.87E-03	1.57E-02	
	LHC	861	431	1.72E-05	7.41E-03	413	1.57E-04	6.48E-02	17	4.87E-03	8.38E-02	
	HHC	0	0	1.72E-05	0.00E+00	0	5.21E-04	0.00E+00	0	4.87E-03	0.00E+00	
Flanges	VAP	107	54	6.83E-07	3.67E-05	52	2.59E-04	1.33E-02	2	6.59E-03	1.42E-02	
	LHC	574	287	6.83E-07	1.96E-04	276	2.59E-04	7.13E-02	11	6.59E-03	7.57E-02	
	HHC	0	0	6.83E-07	0.00E+00	0	8.02E-04	0.00E+00	0	6.59E-03	0.00E+00	
Pumps	LHC	13	7	5.29E-05	3.51E-04	6	4.91E-03	3.13E-02	0	3.05E-02	8.11E-03	
	HHC	0	0	5.29E-05	0.00E+00	0	4.91E-03	0.00E+00	0	3.05E-02	0.00E+00	
Compressors	VAP	0	0	8.82E-06	0.00E+00	0	3.85E-04	0.00E+00	0	3.18E-03	0.00E+00	
Subtotal					9.38E-03			1.93E-01			1.97E-01	4.00E-01

Table III-O-3. Hourly VOC Emissions from Equipment Leaks												
			Default Zero			Leaking @ 100/500 ppmv			Leaking @ 10,000 ppmv			Total VOC Emission Rate (lb/hr)
Component	Service	Total Quantity	Quantity	Emission Factor (lbVOC/hr/ component)	VOC Emission Rate (lb/hr)	Quantity	Emission Factor (lbVOC/hr/ component)	VOC Emission Rate (lb/hr)	Quantity	Emission Factor (lbVOC/hr/ component)	VOC Emission Rate (lb/hr)	
Unit 4 - Naphtha Hydrotreater												
Valves	VAP	360	180	1.72E-05	3.10E-03	173	1.57E-04	2.71E-02	7	4.87E-03	3.50E-02	
	LHC	923	462	1.72E-05	7.94E-03	443	1.57E-04	6.95E-02	18	4.87E-03	8.99E-02	
	HHC	233	117	1.72E-05	2.01E-03	112	5.21E-04	5.83E-02	5	4.87E-03	2.27E-02	
Flanges	VAP	240	120	6.83E-07	8.20E-05	115	2.59E-04	2.98E-02	5	6.59E-03	3.16E-02	
	LHC	616	308	6.83E-07	2.10E-04	295	2.59E-04	7.65E-02	12	6.59E-03	8.12E-02	
	HHC	156	78	6.83E-07	5.32E-05	75	8.02E-04	5.99E-02	3	6.59E-03	2.05E-02	
Pumps	LHC	5	3	5.29E-05	1.32E-04	2	4.91E-03	1.18E-02	0	3.05E-02	3.06E-03	
	HHC	1	1	5.29E-05	3.34E-05	1	4.91E-03	2.98E-03	0	3.05E-02	7.72E-04	
Compressors	VAP	2	1	8.82E-06	8.82E-06	1	3.85E-04	3.70E-04	0	3.18E-03	1.27E-04	
Subtotal					1.36E-02			3.36E-01			2.85E-01	6.35E-01

Table III-O-3. Hourly VOC Emissions from Equipment Leaks												
			Default Zero			Leaking @ 100/500 ppmv			Leaking @ 10,000 ppmv			Total VOC Emission Rate (lb/hr)
Component	Service	Total Quantity	Quantity	Emission Factor (lbVOC/hr/ component)	VOC Emission Rate (lb/hr)	Quantity	Emission Factor (lbVOC/hr/ component)	VOC Emission Rate (lb/hr)	Quantity	Emission Factor (lbVOC/hr/ component)	VOC Emission Rate (lb/hr)	
Unit 5 - Catalytic Reformer												
Valves	VAP	218	109	1.72E-05	1.88E-03	105	1.57E-04	1.64E-02	4	4.87E-03	2.13E-02	
	LHC	768	384	1.72E-05	6.60E-03	369	1.57E-04	5.78E-02	15	4.87E-03	7.47E-02	
	HHC	199	99	1.72E-05	1.71E-03	95	5.21E-04	4.96E-02	4	4.87E-03	1.93E-02	
Flanges	VAP	150	75	6.83E-07	5.13E-05	72	2.59E-04	1.87E-02	3	6.59E-03	1.98E-02	
	LHC	528	264	6.83E-07	1.80E-04	253	2.59E-04	6.56E-02	11	6.59E-03	6.96E-02	
	HHC	137	68	6.83E-07	4.67E-05	66	8.02E-04	5.26E-02	3	6.59E-03	1.80E-02	
Pumps	LHC	5	2	5.29E-05	1.31E-04	2	4.91E-03	1.17E-02	0	3.05E-02	3.03E-03	
	HHC	1	1	5.29E-05	3.39E-05	1	4.91E-03	3.02E-03	0	3.05E-02	7.84E-04	
Compressors	VAP	3	2	8.82E-06	1.32E-05	1	3.85E-04	5.55E-04	0	3.18E-03	1.91E-04	
Subtotal					1.06E-02			2.76E-01			2.27E-01	5.13E-01

Table III-O-3. Hourly VOC Emissions from Equipment Leaks												
			Default Zero			Leaking @ 100/500 ppmv			Leaking @ 10,000 ppmv			Total VOC Emission Rate (lb/hr)
Component	Service	Total Quantity	Quantity	Emission Factor (lbVOC/hr/ component)	VOC Emission Rate (lb/hr)	Quantity	Emission Factor (lbVOC/hr/ component)	VOC Emission Rate (lb/hr)	Quantity	Emission Factor (lbVOC/hr/ component)	VOC Emission Rate (lb/hr)	
Unit 6 - Isomerization (Penex)												
Valves	VAP	177	88	1.72E-05	1.52E-03	85	1.57E-04	1.33E-02	4	4.87E-03	1.72E-02	
	LHC	740	370	1.72E-05	6.36E-03	355	1.57E-04	5.57E-02	15	4.87E-03	7.20E-02	
	HHC	17	8	1.72E-05	1.43E-04	8	5.21E-04	4.17E-03	0	4.87E-03	1.62E-03	
Flanges	VAP	121	61	6.83E-07	4.15E-05	58	2.59E-04	1.51E-02	2	6.59E-03	1.60E-02	
	LHC	509	254	6.83E-07	1.74E-04	244	2.59E-04	6.32E-02	10	6.59E-03	6.71E-02	
	HHC	11	6	6.83E-07	3.92E-06	6	8.02E-04	4.41E-03	0	6.59E-03	1.51E-03	
Pumps	LHC	7	3	5.29E-05	1.84E-04	3	4.91E-03	1.64E-02	0	3.05E-02	4.24E-03	
	HHC	0	0	5.29E-05	4.13E-06	0	4.91E-03	3.68E-04	0	3.05E-02	9.54E-05	
Compressors	VAP	0	0	8.82E-06	0.00E+00	0	3.85E-04	0.00E+00	0	3.18E-03	0.00E+00	
Subtotal					8.43E-03			1.73E-01			1.80E-01	3.61E-01

Table III-O-3. Hourly VOC Emissions from Equipment Leaks												
			Default Zero			Leaking @ 100/500 ppmv			Leaking @ 10,000 ppmv			Total VOC Emission Rate (lb/hr)
Component	Service	Total Quantity	Quantity	Emission Factor (lbVOC/hr/ component)	VOC Emission Rate (lb/hr)	Quantity	Emission Factor (lbVOC/hr/ component)	VOC Emission Rate (lb/hr)	Quantity	Emission Factor (lbVOC/hr/ component)	VOC Emission Rate (lb/hr)	
Unit 7 - Hydrogen Production												
Valves	VAP	147	73	1.72E-05	1.26E-03	70	1.57E-04	1.10E-02	3	4.87E-03	1.43E-02	
	LHC	43	22	1.72E-05	3.73E-04	21	1.57E-04	3.26E-03	1	4.87E-03	4.22E-03	
	HHC	0	0	1.72E-05	0.00E+00	0	5.21E-04	0.00E+00	0	4.87E-03	0.00E+00	
Flanges	VAP	98	49	6.83E-07	3.34E-05	47	2.59E-04	1.21E-02	2	6.59E-03	1.29E-02	
	LHC	29	14	6.83E-07	9.87E-06	14	2.59E-04	3.59E-03	1	6.59E-03	3.81E-03	
	HHC	0	0	6.83E-07	0.00E+00	0	8.02E-04	0.00E+00	0	6.59E-03	0.00E+00	
Pumps	LHC	0	0	5.29E-05	0.00E+00	0	4.91E-03	0.00E+00	0	3.05E-02	0.00E+00	
	HHC	0	0	5.29E-05	0.00E+00	0	4.91E-03	0.00E+00	0	3.05E-02	0.00E+00	
Compressors	VAP	0	0	8.82E-06	0.00E+00	0	3.85E-04	0.00E+00	0	3.18E-03	0.00E+00	
Subtotal					1.68E-03			3.00E-02			3.52E-02	6.69E-02

Table III-O-3. Hourly VOC Emissions from Equipment Leaks												
			Default Zero			Leaking @ 100/500 ppmv			Leaking @ 10,000 ppmv			Total VOC Emission Rate (lb/hr)
Component	Service	Total Quantity	Quantity	Emission Factor (lbVOC/hr/ component)	VOC Emission Rate (lb/hr)	Quantity	Emission Factor (lbVOC/hr/ component)	VOC Emission Rate (lb/hr)	Quantity	Emission Factor (lbVOC/hr/ component)	VOC Emission Rate (lb/hr)	
Unit 8 - Distillate Hydrotreater												
Valves	VAP	370	185	1.72E-05	3.18E-03	178	1.57E-04	2.78E-02	7	4.87E-03	3.60E-02	
	LHC	927	463	1.72E-05	7.97E-03	445	1.57E-04	6.97E-02	19	4.87E-03	9.02E-02	
	HHC	737	368	1.72E-05	6.33E-03	354	5.21E-04	1.84E-01	15	4.87E-03	7.17E-02	
Flanges	VAP	251	125	6.83E-07	8.56E-05	120	2.59E-04	3.11E-02	5	6.59E-03	3.30E-02	
	LHC	628	314	6.83E-07	2.15E-04	301	2.59E-04	7.80E-02	13	6.59E-03	8.28E-02	
	HHC	499	250	6.83E-07	1.71E-04	240	8.02E-04	1.92E-01	10	6.59E-03	6.58E-02	
Pumps	LHC	12	6	5.29E-05	3.24E-04	6	4.91E-03	2.89E-02	0	3.05E-02	7.49E-03	
	HHC	10	5	5.29E-05	2.58E-04	5	4.91E-03	2.30E-02	0	3.05E-02	5.95E-03	
Compressors	VAP	1	1	8.82E-06	4.41E-06	0	3.85E-04	1.85E-04	0	3.18E-03	6.35E-05	
Subtotal					1.85E-02			6.35E-01			3.93E-01	1.05E+00

Table III-O-3. Hourly VOC Emissions from Equipment Leaks												
			Default Zero			Leaking @ 100/500 ppmv			Leaking @ 10,000 ppmv			Total VOC Emission Rate (lb/hr)
Component	Service	Total Quantity	Quantity	Emission Factor (lbVOC/hr/ component)	VOC Emission Rate (lb/hr)	Quantity	Emission Factor (lbVOC/hr/ component)	VOC Emission Rate (lb/hr)	Quantity	Emission Factor (lbVOC/hr/ component)	VOC Emission Rate (lb/hr)	
Unit 10 - Hydrocracker (Unicracker)												
Valves	VAP	369	185	1.72E-05	3.18E-03	177	1.57E-04	2.78E-02	7	4.87E-03	3.59E-02	
	LHC	1945	973	1.72E-05	1.67E-02	934	1.57E-04	1.46E-01	39	4.87E-03	1.89E-01	
	HHC	1266	633	1.72E-05	1.09E-02	608	5.21E-04	3.16E-01	25	4.87E-03	1.23E-01	
Flanges	VAP	254	127	6.83E-07	8.69E-05	122	2.59E-04	3.16E-02	5	6.59E-03	3.35E-02	
	LHC	1339	670	6.83E-07	4.58E-04	643	2.59E-04	1.66E-01	27	6.59E-03	1.77E-01	
	HHC	872	436	6.83E-07	2.98E-04	418	8.02E-04	3.36E-01	17	6.59E-03	1.15E-01	
Pumps	LHC	16	8	5.29E-05	4.13E-04	8	4.91E-03	3.68E-02	0	3.05E-02	9.55E-03	
	HHC	10	5	5.29E-05	2.69E-04	5	4.91E-03	2.40E-02	0	3.05E-02	6.21E-03	
Compressors	VAP	3	2	8.82E-06	1.32E-05	1	3.85E-04	5.55E-04	0	3.18E-03	1.91E-04	
Subtotal					3.23E-02			1.09E+00			6.89E-01	1.81E+00

Table III-O-3. Hourly VOC Emissions from Equipment Leaks												
			Default Zero			Leaking @ 100/500 ppmv			Leaking @ 10,000 ppmv			Total VOC Emission Rate (lb/hr)
Component	Service	Total Quantity	Quantity	Emission Factor (lbVOC/hr/ component)	VOC Emission Rate (lb/hr)	Quantity	Emission Factor (lbVOC/hr/ component)	VOC Emission Rate (lb/hr)	Quantity	Emission Factor (lbVOC/hr/ component)	VOC Emission Rate (lb/hr)	
Unit 11 - Sour Water Stripping												
Valves	VAP	2	1	1.72E-05	2.09E-05	1	1.57E-04	1.83E-04	0	4.87E-03	2.37E-04	
	LHC	15	8	1.72E-05	1.29E-04	7	1.57E-04	1.13E-03	0	4.87E-03	1.46E-03	
	HHC	0	0	1.72E-05	0.00E+00	0	5.21E-04	0.00E+00	0	4.87E-03	0.00E+00	
Flanges	VAP	2	1	6.83E-07	5.20E-07	1	2.59E-04	1.89E-04	0	6.59E-03	2.01E-04	
	LHC	12	6	6.83E-07	4.10E-06	6	2.59E-04	1.49E-03	0	6.59E-03	1.58E-03	
	HHC	0	0	6.83E-07	0.00E+00	0	8.02E-04	0.00E+00	0	6.59E-03	0.00E+00	
Pumps	LHC	2	1	5.29E-05	5.80E-05	1	4.91E-03	5.17E-03	0	3.05E-02	1.34E-03	
	HHC	0	0	5.29E-05	0.00E+00	0	4.91E-03	0.00E+00	0	3.05E-02	0.00E+00	
Compressors	VAP	0	0	8.82E-06	0.00E+00	0	3.85E-04	0.00E+00	0	3.18E-03	0.00E+00	
Subtotal					2.13E-04			8.16E-03			4.82E-03	1.32E-02

Table III-O-3. Hourly VOC Emissions from Equipment Leaks												
			Default Zero			Leaking @ 100/500 ppmv			Leaking @ 10,000 ppmv			Total VOC Emission Rate (lb/hr)
Component	Service	Total Quantity	Quantity	Emission Factor (lbVOC/hr/ component)	VOC Emission Rate (lb/hr)	Quantity	Emission Factor (lbVOC/hr/ component)	VOC Emission Rate (lb/hr)	Quantity	Emission Factor (lbVOC/hr/ component)	VOC Emission Rate (lb/hr)	
Unit 12 - Amine Regeneration												
Valves	VAP	3	1	1.72E-05	2.53E-05	1	1.57E-04	2.21E-04	0	4.87E-03	2.86E-04	
	LHC	10	5	1.72E-05	8.48E-05	5	1.57E-04	7.42E-04	0	4.87E-03	9.60E-04	
	HHC	0	0	1.72E-05	0.00E+00	0	5.21E-04	0.00E+00	0	4.87E-03	0.00E+00	
Flanges	VAP	2	1	6.83E-07	6.70E-07	1	2.59E-04	2.44E-04	0	6.59E-03	2.59E-04	
	LHC	12	6	6.83E-07	4.10E-06	6	2.59E-04	1.49E-03	0	6.59E-03	1.58E-03	
	HHC	0	0	6.83E-07	0.00E+00	0	8.02E-04	0.00E+00	0	6.59E-03	0.00E+00	
Pumps	LHC	4	2	5.29E-05	1.06E-04	2	4.91E-03	9.43E-03	0	3.05E-02	2.44E-03	
	HHC	0	0	5.29E-05	0.00E+00	0	4.91E-03	0.00E+00	0	3.05E-02	0.00E+00	
Compressors	VAP	0	0	8.82E-06	0.00E+00	0	3.85E-04	0.00E+00	0	3.18E-03	0.00E+00	
Subtotal					2.21E-04			1.21E-02			5.53E-03	1.79E-02

Table III-O-3. Hourly VOC Emissions from Equipment Leaks												
			Default Zero			Leaking @ 100/500 ppmv			Leaking @ 10,000 ppmv			Total VOC Emission Rate (lb/hr)
Component	Service	Total Quantity	Quantity	Emission Factor (lbVOC/hr/ component)	VOC Emission Rate (lb/hr)	Quantity	Emission Factor (lbVOC/hr/ component)	VOC Emission Rate (lb/hr)	Quantity	Emission Factor (lbVOC/hr/ component)	VOC Emission Rate (lb/hr)	
Unit 14 - Delayed Coker												
Valves	VAP	490	245	1.72E-05	4.21E-03	235	1.57E-04	3.69E-02	10	4.87E-03	4.77E-02	
	LHC	934	467	1.72E-05	8.03E-03	448	1.57E-04	7.03E-02	19	4.87E-03	9.09E-02	
	HHC	1634	817	1.72E-05	1.41E-02	785	5.21E-04	4.09E-01	33	4.87E-03	1.59E-01	
Flanges	VAP	340	170	6.83E-07	1.16E-04	163	2.59E-04	4.22E-02	7	6.59E-03	4.48E-02	
	LHC	648	324	6.83E-07	2.21E-04	311	2.59E-04	8.05E-02	13	6.59E-03	8.54E-02	
	HHC	1134	567	6.83E-07	3.88E-04	544	8.02E-04	4.37E-01	23	6.59E-03	1.50E-01	
Pumps	LHC	10	5	5.29E-05	2.77E-04	5	4.91E-03	2.47E-02	0	3.05E-02	6.40E-03	
	HHC	18	9	5.29E-05	4.85E-04	9	4.91E-03	4.33E-02	0	3.05E-02	1.12E-02	
Compressors	VAP	1	1	8.82E-06	4.41E-06	0	3.85E-04	1.85E-04	0	3.18E-03	6.35E-05	
Subtotal					2.78E-02			1.14E+00			5.95E-01	1.77E+00

Table III-O-3. Hourly VOC Emissions from Equipment Leaks												
			Default Zero			Leaking @ 100/500 ppmv			Leaking @ 10,000 ppmv			Total VOC Emission Rate (lb/hr)
Component	Service	Total Quantity	Quantity	Emission Factor (lbVOC/hr/ component)	VOC Emission Rate (lb/hr)	Quantity	Emission Factor (lbVOC/hr/ component)	VOC Emission Rate (lb/hr)	Quantity	Emission Factor (lbVOC/hr/ component)	VOC Emission Rate (lb/hr)	
Unit 15 - Butane Conversion Unit												
Valves	VAP	578	289	1.72E-05	4.97E-03	277	1.57E-04	4.35E-02	12	4.87E-03	5.63E-02	
	LHC	1691	846	1.72E-05	1.45E-02	812	1.57E-04	1.27E-01	34	4.87E-03	1.65E-01	
	HHC	432	216	1.72E-05	3.71E-03	207	5.21E-04	1.08E-01	9	4.87E-03	4.20E-02	
Flanges	VAP	390	195	6.83E-07	1.33E-04	187	2.59E-04	4.85E-02	8	6.59E-03	5.14E-02	
	LHC	1144	572	6.83E-07	3.91E-04	549	2.59E-04	1.42E-01	23	6.59E-03	1.51E-01	
	HHC	292	146	6.83E-07	9.98E-05	140	8.02E-04	1.12E-01	6	6.59E-03	3.85E-02	
Pumps	LHC	10	5	5.29E-05	2.65E-04	5	4.91E-03	2.36E-02	0	3.05E-02	6.11E-03	
	HHC	3	2	5.29E-05	7.94E-05	1	4.91E-03	7.07E-03	0	3.05E-02	1.83E-03	
Compressors	VAP	5	3	8.82E-06	2.20E-05	2	3.85E-04	9.25E-04	0	3.18E-03	3.18E-04	
Subtotal					2.42E-02			6.13E-01			5.12E-01	1.15E+00

Table III-O-3. Hourly VOC Emissions from Equipment Leaks												
			Default Zero			Leaking @ 100/500 ppmv			Leaking @ 10,000 ppmv			Total VOC Emission Rate (lb/hr)
Component	Service	Total Quantity	Quantity	Emission Factor (lbVOC/hr/ component)	VOC Emission Rate (lb/hr)	Quantity	Emission Factor (lbVOC/hr/ component)	VOC Emission Rate (lb/hr)	Quantity	Emission Factor (lbVOC/hr/ component)	VOC Emission Rate (lb/hr)	
Unit 16 - Benzene Reduction Unit												
Valves	VAP	177	88	1.72E-05	1.52E-03	85	1.57E-04	1.33E-02	4	4.87E-03	1.72E-02	
	LHC	740	370	1.72E-05	6.36E-03	355	1.57E-04	5.57E-02	15	4.87E-03	7.20E-02	
	HHC	17	8	1.72E-05	1.43E-04	8	5.21E-04	4.17E-03	0	4.87E-03	1.62E-03	
Flanges	VAP	121	61	6.83E-07	4.15E-05	58	2.59E-04	1.51E-02	2	6.59E-03	1.60E-02	
	LHC	509	254	6.83E-07	1.74E-04	244	2.59E-04	6.32E-02	10	6.59E-03	6.71E-02	
	HHC	11	6	6.83E-07	3.92E-06	6	8.02E-04	4.41E-03	0	6.59E-03	1.51E-03	
Pumps	LHC	7	3	5.29E-05	1.84E-04	3	4.91E-03	1.64E-02	0	3.05E-02	4.24E-03	
	HHC	0	0	5.29E-05	4.13E-06	0	4.91E-03	3.68E-04	0	3.05E-02	9.54E-05	
Compressors	VAP	0	0	8.82E-06	0.00E+00	0	3.85E-04	0.00E+00	0	3.18E-03	0.00E+00	
Subtotal					8.43E-03			1.73E-01			1.80E-01	3.61E-01

Table III-O-3. Hourly VOC Emissions from Equipment Leaks												
			Default Zero			Leaking @ 100/500 ppmv			Leaking @ 10,000 ppmv			Total VOC Emission Rate (lb/hr)
Component	Service	Total Quantity	Quantity	Emission Factor (lbVOC/hr/ component)	VOC Emission Rate (lb/hr)	Quantity	Emission Factor (lbVOC/hr/ component)	VOC Emission Rate (lb/hr)	Quantity	Emission Factor (lbVOC/hr/ component)	VOC Emission Rate (lb/hr)	
Unit 26 - Wastewater Treatment Piping												
Valves	VAP	63	32	1.72E-05	5.45E-04	30	1.57E-04	4.76E-03	1	4.87E-03	6.16E-03	
	LHC	63	32	1.72E-05	5.45E-04	30	1.57E-04	4.76E-03	1	4.87E-03	6.16E-03	
	HHC	463	232	1.72E-05	3.98E-03	222	5.21E-04	1.16E-01	9	4.87E-03	4.51E-02	
Flanges	VAP	41	20	6.83E-07	1.40E-05	20	2.59E-04	5.09E-03	1	6.59E-03	5.40E-03	
	LHC	41	20	6.83E-07	1.40E-05	20	2.59E-04	5.09E-03	1	6.59E-03	5.40E-03	
	HHC	300	150	6.83E-07	1.02E-04	144	8.02E-04	1.15E-01	6	6.59E-03	3.95E-02	
Pumps	LHC	0	0	5.29E-05	1.18E-05	0	4.91E-03	1.05E-03	0	3.05E-02	2.73E-04	
	HHC	3	2	5.29E-05	8.65E-05	2	4.91E-03	7.71E-03	0	3.05E-02	2.00E-03	
Compressors	VAP	0	0	8.82E-06	0.00E+00	0	3.85E-04	0.00E+00	0	3.18E-03	0.00E+00	
Subtotal					5.30E-03			2.60E-01			1.10E-01	3.75E-01

Table III-O-3. Hourly VOC Emissions from Equipment Leaks												
			Default Zero			Leaking @ 100/500 ppmv			Leaking @ 10,000 ppmv			Total VOC Emission Rate (lb/hr)
Component	Service	Total Quantity	Quantity	Emission Factor (lbVOC/hr/ component)	VOC Emission Rate (lb/hr)	Quantity	Emission Factor (lbVOC/hr/ component)	VOC Emission Rate (lb/hr)	Quantity	Emission Factor (lbVOC/hr/ component)	VOC Emission Rate (lb/hr)	
Unit 41 - Crude Oil Metering Station												
Valves	VAP	7	4	1.72E-05	6.02E-05	3	1.57E-04	5.27E-04	0	4.87E-03	6.81E-04	
	LHC	0	0	1.72E-05	0.00E+00	0	1.57E-04	0.00E+00	0	4.87E-03	0.00E+00	
	HHC	63	32	1.72E-05	5.42E-04	30	5.21E-04	1.57E-02	1	4.87E-03	6.13E-03	
Flanges	VAP	6	3	6.83E-07	2.05E-06	3	2.59E-04	7.45E-04	0	6.59E-03	7.91E-04	
	LHC	0	0	6.83E-07	0.00E+00	0	2.59E-04	0.00E+00	0	6.59E-03	0.00E+00	
	HHC	54	27	6.83E-07	1.85E-05	26	8.02E-04	2.08E-02	1	6.59E-03	7.12E-03	
Pumps	LHC	0	0	5.29E-05	0.00E+00	0	4.91E-03	0.00E+00	0	3.05E-02	0.00E+00	
	HHC	0	0	5.29E-05	0.00E+00	0	4.91E-03	0.00E+00	0	3.05E-02	0.00E+00	
Compressors	VAP	0	0	8.82E-06	0.00E+00	0	3.85E-04	0.00E+00	0	3.18E-03	0.00E+00	
Subtotal					6.22E-04			3.78E-02			1.47E-02	5.32E-02

Table III-O-3. Hourly VOC Emissions from Equipment Leaks												
			Default Zero			Leaking @ 100/500 ppmv			Leaking @ 10,000 ppmv			Total VOC Emission Rate (lb/hr)
Component	Service	Total Quantity	Quantity	Emission Factor (lbVOC/hr/ component)	VOC Emission Rate (lb/hr)	Quantity	Emission Factor (lbVOC/hr/ component)	VOC Emission Rate (lb/hr)	Quantity	Emission Factor (lbVOC/hr/ component)	VOC Emission Rate (lb/hr)	
Unit 42 - Tank Farm Piping												
Valves	VAP	0	0	1.72E-05	0.00E+00	0	1.57E-04	0.00E+00	0	4.87E-03	0.00E+00	
	LHC	2440	1220	1.72E-05	2.10E-02	1171	1.57E-04	1.84E-01	49	4.87E-03	2.37E-01	
	HHC	1997	998	1.72E-05	1.72E-02	958	5.21E-04	4.99E-01	40	4.87E-03	1.94E-01	
Flanges	VAP	0	0	6.83E-07	0.00E+00	0	2.59E-04	0.00E+00	0	6.59E-03	0.00E+00	
	LHC	1851	925	6.83E-07	6.32E-04	888	2.59E-04	2.30E-01	37	6.59E-03	2.44E-01	
	HHC	1514	757	6.83E-07	5.17E-04	727	8.02E-04	5.83E-01	30	6.59E-03	2.00E-01	
Pumps	LHC	48	24	5.29E-05	1.27E-03	23	4.91E-03	1.13E-01	1	3.05E-02	2.94E-02	
	HHC	39	20	5.29E-05	1.04E-03	19	4.91E-03	9.28E-02	1	3.05E-02	2.40E-02	
Compressors	VAP	0	0	8.82E-06	0.00E+00	0	3.85E-04	0.00E+00	0	3.18E-03	0.00E+00	
Subtotal					4.16E-02			1.70E+00			9.29E-01	2.67E+00

Table III-O-3. Hourly VOC Emissions from Equipment Leaks												
			Default Zero			Leaking @ 100/500 ppmv			Leaking @ 10,000 ppmv			Total VOC Emission Rate (lb/hr)
Component	Service	Total Quantity	Quantity	Emission Factor (lbVOC/hr/ component)	VOC Emission Rate (lb/hr)	Quantity	Emission Factor (lbVOC/hr/ component)	VOC Emission Rate (lb/hr)	Quantity	Emission Factor (lbVOC/hr/ component)	VOC Emission Rate (lb/hr)	
Unit 43 - Slop and Flushing Oil Systems												
Valves	VAP	0	0	1.72E-05	0.00E+00	0	1.57E-04	0.00E+00	0	4.87E-03	0.00E+00	
	LHC	459	230	1.72E-05	3.95E-03	220	1.57E-04	3.45E-02	9	4.87E-03	4.47E-02	
	HHC	1189	595	1.72E-05	1.02E-02	571	5.21E-04	2.97E-01	24	4.87E-03	1.16E-01	
Flanges	VAP	0	0	6.83E-07	0.00E+00	0	2.59E-04	0.00E+00	0	6.59E-03	0.00E+00	
	LHC	348	174	6.83E-07	1.19E-04	167	2.59E-04	4.33E-02	7	6.59E-03	4.59E-02	
	HHC	902	451	6.83E-07	3.08E-04	433	8.02E-04	3.47E-01	18	6.59E-03	1.19E-01	
Pumps	LHC	3	2	5.29E-05	8.38E-05	2	4.91E-03	7.47E-03	0	3.05E-02	1.93E-03	
	HHC	8	4	5.29E-05	2.17E-04	4	4.91E-03	1.93E-02	0	3.05E-02	5.01E-03	
Compressors	VAP	0	0	8.82E-06	0.00E+00	0	3.85E-04	0.00E+00	0	3.18E-03	0.00E+00	
Subtotal					1.49E-02			7.49E-01			3.32E-01	1.10E+00

Table III-O-3. Hourly VOC Emissions from Equipment Leaks												
			Default Zero			Leaking @ 100/500 ppmv			Leaking @ 10,000 ppmv			Total VOC Emission Rate (lb/hr)
Component	Service	Total Quantity	Quantity	Emission Factor (lbVOC/hr/ component)	VOC Emission Rate (lb/hr)	Quantity	Emission Factor (lbVOC/hr/ component)	VOC Emission Rate (lb/hr)	Quantity	Emission Factor (lbVOC/hr/ component)	VOC Emission Rate (lb/hr)	
Unit 44 - Vapor Recovery System Pipework												
Valves	VAP	198	99	1.72E-05	1.70E-03	95	1.57E-04	1.49E-02	4	4.87E-03	1.92E-02	
	LHC	179	89	1.72E-05	1.53E-03	86	1.57E-04	1.34E-02	4	4.87E-03	1.74E-02	
	HHC	0	0	1.72E-05	0.00E+00	0	5.21E-04	0.00E+00	0	4.87E-03	0.00E+00	
Flanges	VAP	141	71	6.83E-07	4.83E-05	68	2.59E-04	1.75E-02	3	6.59E-03	1.86E-02	
	LHC	128	64	6.83E-07	4.36E-05	61	2.59E-04	1.58E-02	3	6.59E-03	1.68E-02	
	HHC	0	0	6.83E-07	0.00E+00	0	8.02E-04	0.00E+00	0	6.59E-03	0.00E+00	
Pumps	LHC	8	4	5.29E-05	2.02E-04	4	4.91E-03	1.80E-02	0	3.05E-02	4.67E-03	
	HHC	0	0	5.29E-05	0.00E+00	0	4.91E-03	0.00E+00	0	3.05E-02	0.00E+00	
Compressors	VAP	0	0	8.82E-06	0.00E+00	0	3.85E-04	0.00E+00	0	3.18E-03	0.00E+00	
Subtotal					3.53E-03			7.97E-02			7.67E-02	1.60E-01

Table III-O-3. Hourly VOC Emissions from Equipment Leaks												
			Default Zero			Leaking @ 100/500 ppmv			Leaking @ 10,000 ppmv			Total VOC Emission Rate (lb/hr)
Component	Service	Total Quantity	Quantity	Emission Factor (lbVOC/hr/ component)	VOC Emission Rate (lb/hr)	Quantity	Emission Factor (lbVOC/hr/ component)	VOC Emission Rate (lb/hr)	Quantity	Emission Factor (lbVOC/hr/ component)	VOC Emission Rate (lb/hr)	
Unit 45 - Gasoline Blending Pipework												
Valves	VAP	0	0	1.72E-05	0.00E+00	0	1.57E-04	0.00E+00	0	4.87E-03	0.00E+00	
	LHC	50	25	1.72E-05	4.30E-04	24	1.57E-04	3.76E-03	1	4.87E-03	4.87E-03	
	HHC	0	0	1.72E-05	0.00E+00	0	5.21E-04	0.00E+00	0	4.87E-03	0.00E+00	
Flanges	VAP	0	0	6.83E-07	0.00E+00	0	2.59E-04	0.00E+00	0	6.59E-03	0.00E+00	
	LHC	150	75	6.83E-07	5.13E-05	72	2.59E-04	1.86E-02	3	6.59E-03	1.98E-02	
	HHC	0	0	6.83E-07	0.00E+00	0	8.02E-04	0.00E+00	0	6.59E-03	0.00E+00	
Pumps	LHC	25	13	5.29E-05	6.61E-04	12	4.91E-03	5.89E-02	1	3.05E-02	1.53E-02	
	HHC	0	0	5.29E-05	0.00E+00	0	4.91E-03	0.00E+00	0	3.05E-02	0.00E+00	
Compressors	VAP	0	0	8.82E-06	0.00E+00	0	3.85E-04	0.00E+00	0	3.18E-03	0.00E+00	
Subtotal					1.14E-03			8.13E-02			3.99E-02	1.22E-01

Table III-O-3. Hourly VOC Emissions from Equipment Leaks												
			Default Zero			Leaking @ 100/500 ppmv			Leaking @ 10,000 ppmv			Total VOC Emission Rate (lb/hr)
Component	Service	Total Quantity	Quantity	Emission Factor (lbVOC/hr/ component)	VOC Emission Rate (lb/hr)	Quantity	Emission Factor (lbVOC/hr/ component)	VOC Emission Rate (lb/hr)	Quantity	Emission Factor (lbVOC/hr/ component)	VOC Emission Rate (lb/hr)	
Unit 46 - Rail Loading/Unloading Pipework												
Valves	VAP	520	260	1.72E-05	4.47E-03	250	1.57E-04	3.91E-02	10	4.87E-03	5.06E-02	
	LHC	1700	850	1.72E-05	1.46E-02	816	1.57E-04	1.28E-01	34	4.87E-03	1.65E-01	
	HHC	0	0	1.72E-05	0.00E+00	0	5.21E-04	0.00E+00	0	4.87E-03	0.00E+00	
Flanges	VAP	607	303	6.83E-07	2.07E-04	291	2.59E-04	7.54E-02	12	6.59E-03	8.00E-02	
	LHC	1983	992	6.83E-07	6.78E-04	952	2.59E-04	2.46E-01	40	6.59E-03	2.61E-01	
	HHC	0	0	6.83E-07	0.00E+00	0	8.02E-04	0.00E+00	0	6.59E-03	0.00E+00	
Pumps	LHC	0	0	5.29E-05	0.00E+00	0	4.91E-03	0.00E+00	0	3.05E-02	0.00E+00	
	HHC	0	0	5.29E-05	0.00E+00	0	4.91E-03	0.00E+00	0	3.05E-02	0.00E+00	
Compressors	VAP	0	0	8.82E-06	0.00E+00	0	3.85E-04	0.00E+00	0	3.18E-03	0.00E+00	
Subtotal					2.00E-02			4.89E-01			5.58E-01	1.07E+00

Table III-O-3. Hourly VOC Emissions from Equipment Leaks												
			Default Zero			Leaking @ 100/500 ppmv			Leaking @ 10,000 ppmv			Total VOC Emission Rate (lb/hr)
Component	Service	Total Quantity	Quantity	Emission Factor (lbVOC/hr/ component)	VOC Emission Rate (lb/hr)	Quantity	Emission Factor (lbVOC/hr/ component)	VOC Emission Rate (lb/hr)	Quantity	Emission Factor (lbVOC/hr/ component)	VOC Emission Rate (lb/hr)	
Unit 47 - Truck Loading/Unloading Pipework												
Valves	VAP	340	170	1.72E-05	2.92E-03	163	1.57E-04	2.56E-02	7	4.87E-03	3.31E-02	
	LHC	1300	650	1.72E-05	1.12E-02	624	1.57E-04	9.78E-02	26	4.87E-03	1.27E-01	
	HHC	40	20	1.72E-05	3.44E-04	19	5.21E-04	1.00E-02	1	4.87E-03	3.89E-03	
Flanges	VAP	383	191	6.83E-07	1.31E-04	184	2.59E-04	4.75E-02	8	6.59E-03	5.04E-02	
	LHC	1463	731	6.83E-07	5.00E-04	702	2.59E-04	1.82E-01	29	6.59E-03	1.93E-01	
	HHC	45	23	6.83E-07	1.54E-05	22	8.02E-04	1.73E-02	1	6.59E-03	5.93E-03	
Pumps	LHC	0	0	5.29E-05	0.00E+00	0	4.91E-03	0.00E+00	0	3.05E-02	0.00E+00	
	HHC	0	0	5.29E-05	0.00E+00	0	4.91E-03	0.00E+00	0	3.05E-02	0.00E+00	
Compressors	VAP	0	0	8.82E-06	0.00E+00	0	3.85E-04	0.00E+00	0	3.18E-03	0.00E+00	
Subtotal					1.51E-02			3.80E-01			4.13E-01	8.08E-01

Table III-O-3. Hourly VOC Emissions from Equipment Leaks												
			Default Zero			Leaking @ 100/500 ppmv			Leaking @ 10,000 ppmv			Total VOC Emission Rate (lb/hr)
Component	Service	Total Quantity	Quantity	Emission Factor (lbVOC/hr/ component)	VOC Emission Rate (lb/hr)	Quantity	Emission Factor (lbVOC/hr/ component)	VOC Emission Rate (lb/hr)	Quantity	Emission Factor (lbVOC/hr/ component)	VOC Emission Rate (lb/hr)	
Unit 51 - Closed Drain System Pipework												
Valves	VAP	0	0	1.72E-05	0.00E+00	0	1.57E-04	0.00E+00	0	4.87E-03	0.00E+00	
	LHC	76	38	1.72E-05	6.53E-04	36	1.57E-04	5.72E-03	2	4.87E-03	7.40E-03	
	HHC	40	20	1.72E-05	3.44E-04	19	5.21E-04	1.00E-02	1	4.87E-03	3.89E-03	
Flanges	VAP	0	0	6.83E-07	0.00E+00	0	2.59E-04	0.00E+00	0	6.59E-03	0.00E+00	
	LHC	87	43	6.83E-07	2.97E-05	42	2.59E-04	1.08E-02	2	6.59E-03	1.15E-02	
	HHC	46	23	6.83E-07	1.56E-05	22	8.02E-04	1.76E-02	1	6.59E-03	6.03E-03	
Pumps	LHC	4	2	5.29E-05	1.01E-04	2	4.91E-03	8.96E-03	0	3.05E-02	2.32E-03	
	HHC	2	1	5.29E-05	5.29E-05	1	4.91E-03	4.72E-03	0	3.05E-02	1.22E-03	
Compressors	VAP	0	0	8.82E-06	0.00E+00	0	3.85E-04	0.00E+00	0	3.18E-03	0.00E+00	
Subtotal					1.20E-03			5.78E-02			3.23E-02	9.13E-02

Table III-O-3. Hourly VOC Emissions from Equipment Leaks												
			Default Zero			Leaking @ 100/500 ppmv			Leaking @ 10,000 ppmv			Total VOC Emission Rate (lb/hr)
Component	Service	Total Quantity	Quantity	Emission Factor (lbVOC/hr/ component)	VOC Emission Rate (lb/hr)	Quantity	Emission Factor (lbVOC/hr/ component)	VOC Emission Rate (lb/hr)	Quantity	Emission Factor (lbVOC/hr/ component)	VOC Emission Rate (lb/hr)	
Unit 60 - Product Pipeline												
Valves	VAP	20	10	1.72E-05	1.72E-04	10	1.57E-04	1.50E-03	0	4.87E-03	1.95E-03	
	LHC	150	75	1.72E-05	1.29E-03	72	1.57E-04	1.13E-02	3	4.87E-03	1.46E-02	
	HHC	90	45	1.72E-05	7.74E-04	43	5.21E-04	2.25E-02	2	4.87E-03	8.76E-03	
Flanges	VAP	23	12	6.83E-07	7.86E-06	11	2.59E-04	2.86E-03	0	6.59E-03	3.03E-03	
	LHC	180	90	6.83E-07	6.15E-05	86	2.59E-04	2.24E-02	4	6.59E-03	2.37E-02	
	HHC	80	40	6.83E-07	2.73E-05	38	8.02E-04	3.08E-02	2	6.59E-03	1.05E-02	
Pumps	LHC	10	5	5.29E-05	2.65E-04	5	4.91E-03	2.36E-02	0	3.05E-02	6.11E-03	
	HHC	5	2	5.29E-05	1.27E-04	2	4.91E-03	1.13E-02	0	3.05E-02	2.93E-03	
Compressors	VAP	0	0	8.82E-06	0.00E+00	0	3.85E-04	0.00E+00	0	3.18E-03	0.00E+00	
Subtotal					2.72E-03			1.26E-01			7.17E-02	2.01E-01
TOTAL												**16.82**

Table III-O-4. Annual VOC Emissions from Equipment Leaks												
			Default Zero			Leaking @ 100/500 ppmv			Leaking @ 5,000 ppmv			Total VOC Emission Rate (lb/hr)
Component	Service	Total Quantity	Quantity	Emission Factor (lbVOC/hr/ component)	VOC Emission Rate (lb/hr)	Quantity	Emission Factor (lbVOC/hr/ component)	VOC Emission Rate (lb/hr)	Quantity	Emission Factor (lbVOC/hr/ component)	VOC Emission Rate (lb/hr)	
Unit 1 - Atmospheric Distillation												
Valves	VAP	427	421	1.72E-05	7.24E-03	4	1.57E-04	6.69E-04	1	4.87E-03	6.23E-03	
	LHC	1182	1166	1.72E-05	2.01E-02	12	1.57E-04	1.85E-03	4	4.87E-03	1.72E-02	
	HHC	1280	1255	1.72E-05	2.16E-02	13	5.21E-04	6.67E-03	13	4.87E-03	6.23E-02	
Flanges	VAP	288	284	6.83E-07	1.94E-04	3	2.59E-04	7.45E-04	1	6.59E-03	5.69E-03	
	LHC	797	787	6.83E-07	5.38E-04	8	2.59E-04	2.06E-03	2	6.59E-03	1.58E-02	
	HHC	863	846	6.83E-07	5.78E-04	9	8.02E-04	6.93E-03	9	6.59E-03	5.69E-02	
Pumps	LHC	9	4	5.29E-05	2.38E-04	4	4.91E-03	2.21E-02	0	3.05E-02	2.77E-03	
	HHC	10	10	5.29E-05	5.09E-04	0	4.91E-03	4.83E-04	0	3.05E-02	3.00E-03	
Compressors	VAP	1	0	8.82E-06	0.00E+00	1	3.85E-04	3.81E-04	0	3.18E-03	3.18E-05	
Subtotal					5.09E-02			4.18E-02			1.70E-01	2.63E-01

Table III-O-4. Annual VOC Emissions from Equipment Leaks												
			Default Zero			Leaking @ 100/500 ppmv			Leaking @ 5,000 ppmv			Total VOC Emission Rate (lb/hr)
Component	Service	Total Quantity	Quantity	Emission Factor (lbVOC/hr/ component)	VOC Emission Rate (lb/hr)	Quantity	Emission Factor (lbVOC/hr/ component)	VOC Emission Rate (lb/hr)	Quantity	Emission Factor (lbVOC/hr/ component)	VOC Emission Rate (lb/hr)	
Unit 2 - Vacuum Distillation												
Valves	VAP	113	111	1.72E-05	1.91E-03	1	1.57E-04	1.77E-04	0	4.87E-03	1.65E-03	
	LHC	88	87	1.72E-05	1.50E-03	1	1.57E-04	1.38E-04	0	4.87E-03	1.29E-03	
	HHC	585	573	1.72E-05	9.86E-03	6	5.21E-04	3.05E-03	6	4.87E-03	2.85E-02	
Flanges	VAP	80	79	6.83E-07	5.37E-05	1	2.59E-04	2.06E-04	0	6.59E-03	1.57E-03	
	LHC	62	61	6.83E-07	4.20E-05	1	2.59E-04	1.61E-04	0	6.59E-03	1.23E-03	
	HHC	413	405	6.83E-07	2.77E-04	4	8.02E-04	3.31E-03	4	6.59E-03	2.72E-02	
Pumps	LHC	1	0	5.29E-05	1.90E-05	0	4.91E-03	1.77E-03	0	3.05E-02	2.22E-04	
	HHC	5	5	5.29E-05	2.50E-04	0	4.91E-03	2.37E-04	0	3.05E-02	1.47E-03	
Compressors	VAP	2	0	8.82E-06	0.00E+00	2	3.85E-04	7.63E-04	0	3.18E-03	6.35E-05	
Subtotal					1.39E-02			9.81E-03			6.32E-02	8.69E-02

Table III-O-4. Annual VOC Emissions from Equipment Leaks												
			Default Zero			Leaking @ 100/500 ppmv			Leaking @ 5,000 ppmv			Total VOC Emission Rate (lb/hr)
Component	Service	Total Quantity	Quantity	Emission Factor (lbVOC/hr/ component)	VOC Emission Rate (lb/hr)	Quantity	Emission Factor (lbVOC/hr/ component)	VOC Emission Rate (lb/hr)	Quantity	Emission Factor (lbVOC/hr/ component)	VOC Emission Rate (lb/hr)	
Unit 3 - Gas Plant												
Valves	VAP	161	159	1.72E-05	2.73E-03	2	1.57E-04	2.52E-04	0	4.87E-03	2.35E-03	
	LHC	861	850	1.72E-05	1.46E-02	9	1.57E-04	1.35E-03	3	4.87E-03	1.26E-02	
	HHC	0	0	1.72E-05	0.00E+00	0	5.21E-04	0.00E+00	0	4.87E-03	0.00E+00	
Flanges	VAP	107	106	6.83E-07	7.24E-05	1	2.59E-04	2.78E-04	0	6.59E-03	2.12E-03	
	LHC	574	567	6.83E-07	3.87E-04	6	2.59E-04	1.49E-03	2	6.59E-03	1.14E-02	
	HHC	0	0	6.83E-07	0.00E+00	0	8.02E-04	0.00E+00	0	6.59E-03	0.00E+00	
Pumps	LHC	13	7	5.29E-05	3.48E-04	7	4.91E-03	3.23E-02	0	3.05E-02	4.06E-03	
	HHC	0	0	5.29E-05	0.00E+00	0	4.91E-03	0.00E+00	0	3.05E-02	0.00E+00	
Compressors	VAP	0	0	8.82E-06	0.00E+00	0	3.85E-04	0.00E+00	0	3.18E-03	0.00E+00	
Subtotal					1.82E-02			3.57E-02			3.25E-02	8.63E-02

Table III-O-4. Annual VOC Emissions from Equipment Leaks												
			Default Zero			Leaking @ 100/500 ppmv			Leaking @ 5,000 ppmv			Total VOC Emission Rate (lb/hr)
Component	Service	Total Quantity	Quantity	Emission Factor (lbVOC/hr/ component)	VOC Emission Rate (lb/hr)	Quantity	Emission Factor (lbVOC/hr/ component)	VOC Emission Rate (lb/hr)	Quantity	Emission Factor (lbVOC/hr/ component)	VOC Emission Rate (lb/hr)	
Unit 4 - Naphtha Hydrotreater												
Valves	VAP	360	355	1.72E-05	6.11E-03	4	1.57E-04	5.64E-04	1	4.87E-03	5.26E-03	
	LHC	923	911	1.72E-05	1.57E-02	9	1.57E-04	1.45E-03	3	4.87E-03	1.35E-02	
	HHC	233	229	1.72E-05	3.93E-03	2	5.21E-04	1.21E-03	2	4.87E-03	1.14E-02	
Flanges	VAP	240	237	6.83E-07	1.62E-04	2	2.59E-04	6.21E-04	1	6.59E-03	4.75E-03	
	LHC	616	608	6.83E-07	4.15E-04	6	2.59E-04	1.59E-03	2	6.59E-03	1.22E-02	
	HHC	156	152	6.83E-07	1.04E-04	2	8.02E-04	1.25E-03	2	6.59E-03	1.03E-02	
Pumps	LHC	5	2	5.29E-05	1.31E-04	2	4.91E-03	1.22E-02	0	3.05E-02	1.53E-03	
	HHC	1	1	5.29E-05	6.55E-05	0	4.91E-03	6.21E-05	0	3.05E-02	3.86E-04	
Compressors	VAP	2	0	8.82E-06	0.00E+00	2	3.85E-04	7.63E-04	0	3.18E-03	6.35E-05	
Subtotal					2.66E-02			1.97E-02			5.92E-02	1.06E-01

Table III-O-4. Annual VOC Emissions from Equipment Leaks												
			Default Zero			Leaking @ 100/500 ppmv			Leaking @ 5,000 ppmv			Total VOC Emission Rate (lb/hr)
Component	Service	Total Quantity	Quantity	Emission Factor (lbVOC/hr/ component)	VOC Emission Rate (lb/hr)	Quantity	Emission Factor (lbVOC/hr/ component)	VOC Emission Rate (lb/hr)	Quantity	Emission Factor (lbVOC/hr/ component)	VOC Emission Rate (lb/hr)	
Unit 5 - Catalytic Reformer												
Valves	VAP	218	216	1.72E-05	3.71E-03	2	1.57E-04	3.42E-04	1	4.87E-03	3.19E-03	
	LHC	768	758	1.72E-05	1.30E-02	8	1.57E-04	1.20E-03	2	4.87E-03	1.12E-02	
	HHC	199	195	1.72E-05	3.35E-03	2	5.21E-04	1.03E-03	2	4.87E-03	9.66E-03	
Flanges	VAP	150	148	6.83E-07	1.01E-04	2	2.59E-04	3.89E-04	0	6.59E-03	2.97E-03	
	LHC	528	521	6.83E-07	3.56E-04	5	2.59E-04	1.37E-03	2	6.59E-03	1.04E-02	
	HHC	137	134	6.83E-07	9.15E-05	1	8.02E-04	1.10E-03	1	6.59E-03	9.00E-03	
Pumps	LHC	5	2	5.29E-05	1.30E-04	2	4.91E-03	1.21E-02	0	3.05E-02	1.51E-03	
	HHC	1	1	5.29E-05	6.65E-05	0	4.91E-03	6.30E-05	0	3.05E-02	3.92E-04	
Compressors	VAP	3	0	8.82E-06	2.20E-21	3	3.85E-04	1.14E-03	0	3.18E-03	9.53E-05	
Subtotal					2.08E-02			1.87E-02			4.85E-02	8.80E-02

Table III-O-4. Annual VOC Emissions from Equipment Leaks												
			Default Zero			Leaking @ 100/500 ppmv			Leaking @ 5,000 ppmv			Total VOC Emission Rate (lb/hr)
Component	Service	Total Quantity	Quantity	Emission Factor (lbVOC/hr/ component)	VOC Emission Rate (lb/hr)	Quantity	Emission Factor (lbVOC/hr/ component)	VOC Emission Rate (lb/hr)	Quantity	Emission Factor (lbVOC/hr/ component)	VOC Emission Rate (lb/hr)	
Unit 6 - Isomerization (Penex)												
Valves	VAP	177	174	1.72E-05	3.00E-03	2	1.57E-04	2.77E-04	1	4.87E-03	2.58E-03	
	LHC	740	730	1.72E-05	1.26E-02	7	1.57E-04	1.16E-03	2	4.87E-03	1.08E-02	
	HHC	17	16	1.72E-05	2.81E-04	0	5.21E-04	8.68E-05	0	4.87E-03	8.11E-04	
Flanges	VAP	121	120	6.83E-07	8.19E-05	1	2.59E-04	3.14E-04	0	6.59E-03	2.40E-03	
	LHC	509	502	6.83E-07	3.43E-04	5	2.59E-04	1.32E-03	2	6.59E-03	1.01E-02	
	HHC	11	11	6.83E-07	7.67E-06	0	8.02E-04	9.19E-05	0	6.59E-03	7.55E-04	
Pumps	LHC	7	3	5.29E-05	1.82E-04	3	4.91E-03	1.69E-02	0	3.05E-02	2.12E-03	
	HHC	0	0	5.29E-05	8.10E-06	0	4.91E-03	7.68E-06	0	3.05E-02	4.77E-05	
Compressors	VAP	0	0	8.82E-06	0.00E+00	0	3.85E-04	0.00E+00	0	3.18E-03	0.00E+00	
Subtotal					1.65E-02			2.01E-02			2.96E-02	6.62E-02

Table III-O-4. Annual VOC Emissions from Equipment Leaks												
			Default Zero			Leaking @ 100/500 ppmv			Leaking @ 5,000 ppmv			Total VOC Emission Rate (lb/hr)
Component	Service	Total Quantity	Quantity	Emission Factor (lbVOC/hr/ component)	VOC Emission Rate (lb/hr)	Quantity	Emission Factor (lbVOC/hr/ component)	VOC Emission Rate (lb/hr)	Quantity	Emission Factor (lbVOC/hr/ component)	VOC Emission Rate (lb/hr)	
Unit 7 - Hydrogen Production												
Valves	VAP	147	145	1.72E-05	2.49E-03	1	1.57E-04	2.30E-04	0	4.87E-03	2.14E-03	
	LHC	43	43	1.72E-05	7.35E-04	0	1.57E-04	6.79E-05	0	4.87E-03	6.33E-04	
	HHC	0	0	1.72E-05	0.00E+00	0	5.21E-04	0.00E+00	0	4.87E-03	0.00E+00	
Flanges	VAP	98	97	6.83E-07	6.60E-05	1	2.59E-04	2.53E-04	0	6.59E-03	1.93E-03	
	LHC	29	29	6.83E-07	1.95E-05	0	2.59E-04	7.48E-05	0	6.59E-03	5.71E-04	
	HHC	0	0	6.83E-07	0.00E+00	0	8.02E-04	0.00E+00	0	6.59E-03	0.00E+00	
Pumps	LHC	0	0	5.29E-05	0.00E+00	0	4.91E-03	0.00E+00	0	3.05E-02	0.00E+00	
	HHC	0	0	5.29E-05	0.00E+00	0	4.91E-03	0.00E+00	0	3.05E-02	0.00E+00	
Compressors	VAP	0	0	8.82E-06	0.00E+00	0	3.85E-04	0.00E+00	0	3.18E-03	0.00E+00	
Subtotal					3.31E-03			6.26E-04			5.28E-03	9.21E-03

Table III-O-4. Annual VOC Emissions from Equipment Leaks												
			Default Zero			Leaking @ 100/500 ppmv			Leaking @ 5,000 ppmv			Total VOC Emission Rate (lb/hr)
Component	Service	Total Quantity	Quantity	Emission Factor (lbVOC/hr/ component)	VOC Emission Rate (lb/hr)	Quantity	Emission Factor (lbVOC/hr/ component)	VOC Emission Rate (lb/hr)	Quantity	Emission Factor (lbVOC/hr/ component)	VOC Emission Rate (lb/hr)	
Unit 8 - Distillate Hydrotreater												
Valves	VAP	370	365	1.72E-05	6.28E-03	4	1.57E-04	5.80E-04	1	4.87E-03	5.40E-03	
	LHC	927	915	1.72E-05	1.57E-02	9	1.57E-04	1.45E-03	3	4.87E-03	1.35E-02	
	HHC	737	722	1.72E-05	1.24E-02	7	5.21E-04	3.84E-03	7	4.87E-03	3.58E-02	
Flanges	VAP	251	247	6.83E-07	1.69E-04	3	2.59E-04	6.49E-04	1	6.59E-03	4.96E-03	
	LHC	628	620	6.83E-07	4.23E-04	6	2.59E-04	1.62E-03	2	6.59E-03	1.24E-02	
	HHC	499	489	6.83E-07	3.34E-04	5	8.02E-04	4.00E-03	5	6.59E-03	3.29E-02	
Pumps	LHC	12	6	5.29E-05	3.21E-04	6	4.91E-03	2.98E-02	0	3.05E-02	3.74E-03	
	HHC	10	10	5.29E-05	5.05E-04	0	4.91E-03	4.79E-04	0	3.05E-02	2.98E-03	
Compressors	VAP	1	0	8.82E-06	0.00E+00	1	3.85E-04	3.81E-04	0	3.18E-03	3.18E-05	
Subtotal					3.62E-02			4.28E-02			1.12E-01	1.91E-01

Table III-O-4. Annual VOC Emissions from Equipment Leaks												
			Default Zero			Leaking @ 100/500 ppmv			Leaking @ 5,000 ppmv			Total VOC Emission Rate (lb/hr)
Component	Service	Total Quantity	Quantity	Emission Factor (lbVOC/hr/ component)	VOC Emission Rate (lb/hr)	Quantity	Emission Factor (lbVOC/hr/ component)	VOC Emission Rate (lb/hr)	Quantity	Emission Factor (lbVOC/hr/ component)	VOC Emission Rate (lb/hr)	
Unit 10 - Hydrocracker (Unicracker)												
Valves	VAP	369	364	1.72E-05	6.27E-03	4	1.57E-04	5.79E-04	1	4.87E-03	5.39E-03	
	LHC	1945	1920	1.72E-05	3.30E-02	19	1.57E-04	3.05E-03	6	4.87E-03	2.84E-02	
	HHC	1266	1241	1.72E-05	2.13E-02	13	5.21E-04	6.59E-03	13	4.87E-03	6.16E-02	
Flanges	VAP	254	251	6.83E-07	1.72E-04	3	2.59E-04	6.58E-04	1	6.59E-03	5.03E-03	
	LHC	1339	1322	6.83E-07	9.04E-04	13	2.59E-04	3.47E-03	4	6.59E-03	2.65E-02	
	HHC	872	854	6.83E-07	5.84E-04	9	8.02E-04	7.00E-03	9	6.59E-03	5.75E-02	
Pumps	LHC	16	8	5.29E-05	4.09E-04	8	4.91E-03	3.80E-02	0	3.05E-02	4.77E-03	
	HHC	10	10	5.29E-05	5.27E-04	0	4.91E-03	5.00E-04	0	3.05E-02	3.11E-03	
Compressors	VAP	3	0	8.82E-06	2.20E-21	3	3.85E-04	1.14E-03	0	3.18E-03	9.53E-05	
Subtotal					6.32E-02			6.10E-02			1.92E-01	3.17E-01

Table III-O-4. Annual VOC Emissions from Equipment Leaks												
			Default Zero			Leaking @ 100/500 ppmv			Leaking @ 5,000 ppmv			Total VOC Emission Rate (lb/hr)
Component	Service	Total Quantity	Quantity	Emission Factor (lbVOC/hr/ component)	VOC Emission Rate (lb/hr)	Quantity	Emission Factor (lbVOC/hr/ component)	VOC Emission Rate (lb/hr)	Quantity	Emission Factor (lbVOC/hr/ component)	VOC Emission Rate (lb/hr)	
Unit 11 - Sour Water Stripping												
Valves	VAP	2	2	1.72E-05	4.13E-05	0	1.57E-04	3.82E-06	0	4.87E-03	3.55E-05	
	LHC	15	15	1.72E-05	2.55E-04	0	1.57E-04	2.35E-05	0	4.87E-03	2.19E-04	
	HHC	0	0	1.72E-05	0.00E+00	0	5.21E-04	0.00E+00	0	4.87E-03	0.00E+00	
Flanges	VAP	2	2	6.83E-07	1.03E-06	0	2.59E-04	3.94E-06	0	6.59E-03	3.01E-05	
	LHC	12	12	6.83E-07	8.09E-06	0	2.59E-04	3.11E-05	0	6.59E-03	2.37E-04	
	HHC	0	0	6.83E-07	0.00E+00	0	8.02E-04	0.00E+00	0	6.59E-03	0.00E+00	
Pumps	LHC	2	1	5.29E-05	5.74E-05	1	4.91E-03	5.33E-03	0	3.05E-02	6.70E-04	
	HHC	0	0	5.29E-05	0.00E+00	0	4.91E-03	0.00E+00	0	3.05E-02	0.00E+00	
Compressors	VAP	0	0	8.82E-06	0.00E+00	0	3.85E-04	0.00E+00	0	3.18E-03	0.00E+00	
Subtotal					3.62E-04			5.39E-03			1.19E-03	6.95E-03

Table III-O-4. Annual VOC Emissions from Equipment Leaks												
			Default Zero			Leaking @ 100/500 ppmv			Leaking @ 5,000 ppmv			Total VOC Emission Rate (lb/hr)
Component	Service	Total Quantity	Quantity	Emission Factor (lbVOC/hr/ component)	VOC Emission Rate (lb/hr)	Quantity	Emission Factor (lbVOC/hr/ component)	VOC Emission Rate (lb/hr)	Quantity	Emission Factor (lbVOC/hr/ component)	VOC Emission Rate (lb/hr)	
Unit 12 - Amine Regeneration												
Valves	VAP	3	3	1.72E-05	4.99E-05	0	1.57E-04	4.61E-06	0	4.87E-03	4.30E-05	
	LHC	10	10	1.72E-05	1.67E-04	0	1.57E-04	1.55E-05	0	4.87E-03	1.44E-04	
	HHC	0	0	1.72E-05	0.00E+00	0	5.21E-04	0.00E+00	0	4.87E-03	0.00E+00	
Flanges	VAP	2	2	6.83E-07	1.32E-06	0	2.59E-04	5.08E-06	0	6.59E-03	3.88E-05	
	LHC	12	12	6.83E-07	8.09E-06	0	2.59E-04	3.11E-05	0	6.59E-03	2.37E-04	
	HHC	0	0	6.83E-07	0.00E+00	0	8.02E-04	0.00E+00	0	6.59E-03	0.00E+00	
Pumps	LHC	4	2	5.29E-05	1.05E-04	2	4.91E-03	9.73E-03	0	3.05E-02	1.22E-03	
	HHC	0	0	5.29E-05	0.00E+00	0	4.91E-03	0.00E+00	0	3.05E-02	0.00E+00	
Compressors	VAP	0	0	8.82E-06	0.00E+00	0	3.85E-04	0.00E+00	0	3.18E-03	0.00E+00	
Subtotal					3.32E-04			9.78E-03			1.68E-03	1.18E-02

Table III-O-4. Annual VOC Emissions from Equipment Leaks												
			Default Zero			Leaking @ 100/500 ppmv			Leaking @ 5,000 ppmv			Total VOC Emission Rate (lb/hr)
Component	Service	Total Quantity	Quantity	Emission Factor (lbVOC/hr/ component)	VOC Emission Rate (lb/hr)	Quantity	Emission Factor (lbVOC/hr/ component)	VOC Emission Rate (lb/hr)	Quantity	Emission Factor (lbVOC/hr/ component)	VOC Emission Rate (lb/hr)	
Unit 14 - Delayed Coker												
Valves	VAP	490	484	1.72E-05	8.32E-03	5	1.57E-04	7.68E-04	1	4.87E-03	7.15E-03	
	LHC	934	922	1.72E-05	1.59E-02	9	1.57E-04	1.46E-03	3	4.87E-03	1.36E-02	
	HHC	1634	1602	1.72E-05	2.75E-02	16	5.21E-04	8.51E-03	16	4.87E-03	7.95E-02	
Flanges	VAP	340	336	6.83E-07	2.29E-04	3	2.59E-04	8.80E-04	1	6.59E-03	6.72E-03	
	LHC	648	640	6.83E-07	4.37E-04	6	2.59E-04	1.68E-03	2	6.59E-03	1.28E-02	
	HHC	1134	1111	6.83E-07	7.60E-04	11	8.02E-04	9.10E-03	11	6.59E-03	7.48E-02	
Pumps	LHC	10	5	5.29E-05	2.75E-04	5	4.91E-03	2.55E-02	0	3.05E-02	3.20E-03	
	HHC	18	18	5.29E-05	9.51E-04	0	4.91E-03	9.01E-04	0	3.05E-02	5.60E-03	
Compressors	VAP	1	0	8.82E-06	0.00E+00	1	3.85E-04	3.81E-04	0	3.18E-03	3.18E-05	
Subtotal					5.44E-02			4.92E-02			2.03E-01	3.07E-01

Table III-O-4. Annual VOC Emissions from Equipment Leaks												
			Default Zero			Leaking @ 100/500 ppmv			Leaking @ 5,000 ppmv			Total VOC Emission Rate (lb/hr)
Component	Service	Total Quantity	Quantity	Emission Factor (lbVOC/hr/ component)	VOC Emission Rate (lb/hr)	Quantity	Emission Factor (lbVOC/hr/ component)	VOC Emission Rate (lb/hr)	Quantity	Emission Factor (lbVOC/hr/ component)	VOC Emission Rate (lb/hr)	
Unit 15 - Butane Conversion Unit												
Valves	VAP	578	570	1.72E-05	9.81E-03	6	1.57E-04	9.06E-04	2	4.87E-03	8.44E-03	
	LHC	1691	1669	1.72E-05	2.87E-02	17	1.57E-04	2.65E-03	5	4.87E-03	2.47E-02	
	HHC	432	423	1.72E-05	7.28E-03	4	5.21E-04	2.25E-03	4	4.87E-03	2.10E-02	
Flanges	VAP	390	385	6.83E-07	2.63E-04	4	2.59E-04	1.01E-03	1	6.59E-03	7.71E-03	
	LHC	1144	1129	6.83E-07	7.72E-04	11	2.59E-04	2.96E-03	3	6.59E-03	2.26E-02	
	HHC	292	286	6.83E-07	1.96E-04	3	8.02E-04	2.34E-03	3	6.59E-03	1.92E-02	
Pumps	LHC	10	5	5.29E-05	2.62E-04	5	4.91E-03	2.43E-02	0	3.05E-02	3.05E-03	
	HHC	3	3	5.29E-05	1.56E-04	0	4.91E-03	1.47E-04	0	3.05E-02	9.16E-04	
Compressors	VAP	5	0	8.82E-06	-1.59E-21	5	3.85E-04	1.91E-03	0	3.18E-03	1.59E-04	
Subtotal					4.74E-02			3.85E-02			1.08E-01	1.94E-01

Table III-O-4. Annual VOC Emissions from Equipment Leaks												
			Default Zero			Leaking @ 100/500 ppmv			Leaking @ 5,000 ppmv			Total VOC Emission Rate (lb/hr)
Component	Service	Total Quantity	Quantity	Emission Factor (lbVOC/hr/ component)	VOC Emission Rate (lb/hr)	Quantity	Emission Factor (lbVOC/hr/ component)	VOC Emission Rate (lb/hr)	Quantity	Emission Factor (lbVOC/hr/ component)	VOC Emission Rate (lb/hr)	
Unit 16 - Benzene Reduction Unit												
Valves	VAP	177	174	1.72E-05	3.00E-03	2	1.57E-04	2.77E-04	1	4.87E-03	2.58E-03	
	LHC	740	730	1.72E-05	1.26E-02	7	1.57E-04	1.16E-03	2	4.87E-03	1.08E-02	
	HHC	17	16	1.72E-05	2.81E-04	0	5.21E-04	8.68E-05	0	4.87E-03	8.11E-04	
Flanges	VAP	121	120	6.83E-07	8.19E-05	1	2.59E-04	3.14E-04	0	6.59E-03	2.40E-03	
	LHC	509	502	6.83E-07	3.43E-04	5	2.59E-04	1.32E-03	2	6.59E-03	1.01E-02	
	HHC	11	11	6.83E-07	7.67E-06	0	8.02E-04	9.19E-05	0	6.59E-03	7.55E-04	
Pumps	LHC	7	3	5.29E-05	1.82E-04	3	4.91E-03	1.69E-02	0	3.05E-02	2.12E-03	
	HHC	0	0	5.29E-05	8.10E-06	0	4.91E-03	7.68E-06	0	3.05E-02	4.77E-05	
Compressors	VAP	0	0	8.82E-06	0.00E+00	0	3.85E-04	0.00E+00	0	3.18E-03	0.00E+00	
Subtotal					1.65E-02			2.01E-02			2.96E-02	6.62E-02

Table III-O-4. Annual VOC Emissions from Equipment Leaks												
			Default Zero			Leaking @ 100/500 ppmv			Leaking @ 5,000 ppmv			Total VOC Emission Rate (lb/hr)
Component	Service	Total Quantity	Quantity	Emission Factor (lbVOC/hr/ component)	VOC Emission Rate (lb/hr)	Quantity	Emission Factor (lbVOC/hr/ component)	VOC Emission Rate (lb/hr)	Quantity	Emission Factor (lbVOC/hr/ component)	VOC Emission Rate (lb/hr)	
Unit 26 - Wastewater Treatment Piping												
Valves	VAP	63	63	1.72E-05	1.07E-03	1	1.57E-04	9.93E-05	0	4.87E-03	9.25E-04	
	LHC	63	63	1.72E-05	1.07E-03	1	1.57E-04	9.93E-05	0	4.87E-03	9.25E-04	
	HHC	463	454	1.72E-05	7.81E-03	5	5.21E-04	2.41E-03	5	4.87E-03	2.25E-02	
Flanges	VAP	41	40	6.83E-07	2.76E-05	0	2.59E-04	1.06E-04	0	6.59E-03	8.10E-04	
	LHC	41	40	6.83E-07	2.76E-05	0	2.59E-04	1.06E-04	0	6.59E-03	8.10E-04	
	HHC	300	294	6.83E-07	2.01E-04	3	8.02E-04	2.41E-03	3	6.59E-03	1.98E-02	
Pumps	LHC	0	0	5.29E-05	1.17E-05	0	4.91E-03	1.09E-03	0	3.05E-02	1.37E-04	
	HHC	3	3	5.29E-05	1.70E-04	0	4.91E-03	1.61E-04	0	3.05E-02	9.99E-04	
Compressors	VAP	0	0	8.82E-06	0.00E+00	0	3.85E-04	0.00E+00	0	3.18E-03	0.00E+00	
Subtotal					1.04E-02			6.48E-03			4.69E-02	6.38E-02

Table III-O-4. Annual VOC Emissions from Equipment Leaks												
			Default Zero			Leaking @ 100/500 ppmv			Leaking @ 5,000 ppmv			Total VOC Emission Rate (lb/hr)
Component	Service	Total Quantity	Quantity	Emission Factor (lbVOC/hr/ component)	VOC Emission Rate (lb/hr)	Quantity	Emission Factor (lbVOC/hr/ component)	VOC Emission Rate (lb/hr)	Quantity	Emission Factor (lbVOC/hr/ component)	VOC Emission Rate (lb/hr)	
Unit 41 - Crude Oil Metering Station												
Valves	VAP	7	7	1.72E-05	1.19E-04	0	1.57E-04	1.10E-05	0	4.87E-03	1.02E-04	
	LHC	0	0	1.72E-05	0.00E+00	0	1.57E-04	0.00E+00	0	4.87E-03	0.00E+00	
	HHC	63	62	1.72E-05	1.06E-03	1	5.21E-04	3.28E-04	1	4.87E-03	3.07E-03	
Flanges	VAP	6	6	6.83E-07	4.05E-06	0	2.59E-04	1.55E-05	0	6.59E-03	1.19E-04	
	LHC	0	0	6.83E-07	0.00E+00	0	2.59E-04	0.00E+00	0	6.59E-03	0.00E+00	
	HHC	54	53	6.83E-07	3.62E-05	1	8.02E-04	4.33E-04	1	6.59E-03	3.56E-03	
Pumps	LHC	0	0	5.29E-05	0.00E+00	0	4.91E-03	0.00E+00	0	3.05E-02	0.00E+00	
	HHC	0	0	5.29E-05	0.00E+00	0	4.91E-03	0.00E+00	0	3.05E-02	0.00E+00	
Compressors	VAP	0	0	8.82E-06	0.00E+00	0	3.85E-04	0.00E+00	0	3.18E-03	0.00E+00	
Subtotal					1.22E-03			7.88E-04			6.85E-03	8.85E-03

Table III-O-4. Annual VOC Emissions from Equipment Leaks												
			Default Zero			Leaking @ 100/500 ppmv			Leaking @ 5,000 ppmv			Total VOC Emission Rate (lb/hr)
Component	Service	Total Quantity	Quantity	Emission Factor (lbVOC/hr/ component)	VOC Emission Rate (lb/hr)	Quantity	Emission Factor (lbVOC/hr/ component)	VOC Emission Rate (lb/hr)	Quantity	Emission Factor (lbVOC/hr/ component)	VOC Emission Rate (lb/hr)	
Unit 42 - Tank Farm Piping												
Valves	VAP	0	0	1.72E-05	0.00E+00	0	1.57E-04	0.00E+00	0	4.87E-03	0.00E+00	
	LHC	2440	2409	1.72E-05	4.14E-02	24	1.57E-04	3.82E-03	7	4.87E-03	3.56E-02	
	HHC	1997	1957	1.72E-05	3.36E-02	20	5.21E-04	1.04E-02	20	4.87E-03	9.72E-02	
Flanges	VAP	0	0	6.83E-07	0.00E+00	0	2.59E-04	0.00E+00	0	6.59E-03	0.00E+00	
	LHC	1851	1827	6.83E-07	1.25E-03	19	2.59E-04	4.79E-03	6	6.59E-03	3.66E-02	
	HHC	1514	1484	6.83E-07	1.01E-03	15	8.02E-04	1.22E-02	15	6.59E-03	9.98E-02	
Pumps	LHC	48	24	5.29E-05	1.26E-03	24	4.91E-03	1.17E-01	0	3.05E-02	1.47E-02	
	HHC	39	39	5.29E-05	2.04E-03	0	4.91E-03	1.93E-03	0	3.05E-02	1.20E-02	
Compressors	VAP	0	0	8.82E-06	0.00E+00	0	3.85E-04	0.00E+00	0	3.18E-03	0.00E+00	
Subtotal					8.06E-02			1.50E-01			2.96E-01	5.27E-01

Table III-O-4. Annual VOC Emissions from Equipment Leaks												
			Default Zero			Leaking @ 100/500 ppmv			Leaking @ 5,000 ppmv			Total VOC Emission Rate (lb/hr)
Component	Service	Total Quantity	Quantity	Emission Factor (lbVOC/hr/ component)	VOC Emission Rate (lb/hr)	Quantity	Emission Factor (lbVOC/hr/ component)	VOC Emission Rate (lb/hr)	Quantity	Emission Factor (lbVOC/hr/ component)	VOC Emission Rate (lb/hr)	
Unit 43 - Slop and Flushing Oil Systems												
Valves	VAP	0	0	1.72E-05	0.00E+00	0	1.57E-04	0.00E+00	0	4.87E-03	0.00E+00	
	LHC	459	453	1.72E-05	7.79E-03	5	1.57E-04	7.20E-04	1	4.87E-03	6.70E-03	
	HHC	1189	1165	1.72E-05	2.00E-02	12	5.21E-04	6.19E-03	12	4.87E-03	5.79E-02	
Flanges	VAP	0	0	6.83E-07	0.00E+00	0	2.59E-04	0.00E+00	0	6.59E-03	0.00E+00	
	LHC	348	344	6.83E-07	2.35E-04	3	2.59E-04	9.02E-04	1	6.59E-03	6.89E-03	
	HHC	902	884	6.83E-07	6.04E-04	9	8.02E-04	7.24E-03	9	6.59E-03	5.95E-02	
Pumps	LHC	3	2	5.29E-05	8.29E-05	2	4.91E-03	7.70E-03	0	3.05E-02	9.67E-04	
	HHC	8	8	5.29E-05	4.25E-04	0	4.91E-03	4.03E-04	0	3.05E-02	2.50E-03	
Compressors	VAP	0	0	8.82E-06	0.00E+00	0	3.85E-04	0.00E+00	0	3.18E-03	0.00E+00	
Subtotal					2.92E-02			2.32E-02			1.34E-01	1.87E-01

Table III-O-4. Annual VOC Emissions from Equipment Leaks												
			Default Zero			Leaking @ 100/500 ppmv			Leaking @ 5,000 ppmv			Total VOC Emission Rate (lb/hr)
Component	Service	Total Quantity	Quantity	Emission Factor (lbVOC/hr/ component)	VOC Emission Rate (lb/hr)	Quantity	Emission Factor (lbVOC/hr/ component)	VOC Emission Rate (lb/hr)	Quantity	Emission Factor (lbVOC/hr/ component)	VOC Emission Rate (lb/hr)	
Unit 44 - Vapor Recovery System Pipework												
Valves	VAP	198	195	1.72E-05	3.36E-03	2	1.57E-04	3.10E-04	1	4.87E-03	2.89E-03	
	LHC	179	176	1.72E-05	3.03E-03	2	1.57E-04	2.80E-04	1	4.87E-03	2.61E-03	
	HHC	0	0	1.72E-05	0.00E+00	0	5.21E-04	0.00E+00	0	4.87E-03	0.00E+00	
Flanges	VAP	141	139	6.83E-07	9.53E-05	1	2.59E-04	3.66E-04	0	6.59E-03	2.79E-03	
	LHC	128	126	6.83E-07	8.60E-05	1	2.59E-04	3.30E-04	0	6.59E-03	2.52E-03	
	HHC	0	0	6.83E-07	0.00E+00	0	8.02E-04	0.00E+00	0	6.59E-03	0.00E+00	
Pumps	LHC	8	4	5.29E-05	2.00E-04	4	4.91E-03	1.86E-02	0	3.05E-02	2.34E-03	
	HHC	0	0	5.29E-05	0.00E+00	0	4.91E-03	0.00E+00	0	3.05E-02	0.00E+00	
Compressors	VAP	0	0	8.82E-06	0.00E+00	0	3.85E-04	0.00E+00	0	3.18E-03	0.00E+00	
Subtotal					6.77E-03			1.99E-02			1.31E-02	3.98E-02

Table III-O-4. Annual VOC Emissions from Equipment Leaks												
			Default Zero			Leaking @ 100/500 ppmv			Leaking @ 5,000 ppmv			Total VOC Emission Rate (lb/hr)
Component	Service	Total Quantity	Quantity	Emission Factor (lbVOC/hr/ component)	VOC Emission Rate (lb/hr)	Quantity	Emission Factor (lbVOC/hr/ component)	VOC Emission Rate (lb/hr)	Quantity	Emission Factor (lbVOC/hr/ component)	VOC Emission Rate (lb/hr)	
Unit 45 - Gasoline Blending Pipework												
Valves	VAP	0	0	1.72E-05	0.00E+00	0	1.57E-04	0.00E+00	0	4.87E-03	0.00E+00	
	LHC	50	49	1.72E-05	8.49E-04	1	1.57E-04	7.84E-05	0	4.87E-03	7.30E-04	
	HHC	0	0	1.72E-05	0.00E+00	0	5.21E-04	0.00E+00	0	4.87E-03	0.00E+00	
Flanges	VAP	0	0	6.83E-07	0.00E+00	0	2.59E-04	0.00E+00	0	6.59E-03	0.00E+00	
	LHC	150	148	6.83E-07	1.01E-04	2	2.59E-04	3.88E-04	0	6.59E-03	2.97E-03	
	HHC	0	0	6.83E-07	0.00E+00	0	8.02E-04	0.00E+00	0	6.59E-03	0.00E+00	
Pumps	LHC	25	12	5.29E-05	6.55E-04	12	4.91E-03	6.08E-02	0	3.05E-02	7.64E-03	
	HHC	0	0	5.29E-05	0.00E+00	0	4.91E-03	0.00E+00	0	3.05E-02	0.00E+00	
Compressors	VAP	0	0	8.82E-06	0.00E+00	0	3.85E-04	0.00E+00	0	3.18E-03	0.00E+00	
Subtotal					1.60E-03			6.13E-02			1.13E-02	7.42E-02

Table III-O-4. Annual VOC Emissions from Equipment Leaks												
			Default Zero			Leaking @ 100/500 ppmv			Leaking @ 5,000 ppmv			Total VOC Emission Rate (lb/hr)
Component	Service	Total Quantity	Quantity	Emission Factor (lbVOC/hr/ component)	VOC Emission Rate (lb/hr)	Quantity	Emission Factor (lbVOC/hr/ component)	VOC Emission Rate (lb/hr)	Quantity	Emission Factor (lbVOC/hr/ component)	VOC Emission Rate (lb/hr)	
Unit 46 - Rail Loading/Unloading Pipework												
Valves	VAP	520	513	1.72E-05	8.83E-03	5	1.57E-04	8.15E-04	2	4.87E-03	7.59E-03	
	LHC	1700	1678	1.72E-05	2.89E-02	17	1.57E-04	2.66E-03	5	4.87E-03	2.48E-02	
	HHC	0	0	1.72E-05	0.00E+00	0	5.21E-04	0.00E+00	0	4.87E-03	0.00E+00	
Flanges	VAP	607	599	6.83E-07	4.09E-04	6	2.59E-04	1.57E-03	2	6.59E-03	1.20E-02	
	LHC	1983	1958	6.83E-07	1.34E-03	20	2.59E-04	5.13E-03	6	6.59E-03	3.92E-02	
	HHC	0	0	6.83E-07	0.00E+00	0	8.02E-04	0.00E+00	0	6.59E-03	0.00E+00	
Pumps	LHC	0	0	5.29E-05	0.00E+00	0	4.91E-03	0.00E+00	0	3.05E-02	0.00E+00	
	HHC	0	0	5.29E-05	0.00E+00	0	4.91E-03	0.00E+00	0	3.05E-02	0.00E+00	
Compressors	VAP	0	0	8.82E-06	0.00E+00	0	3.85E-04	0.00E+00	0	3.18E-03	0.00E+00	
Subtotal					3.94E-02			1.02E-02			8.36E-02	1.33E-01

Table III-O-4. Annual VOC Emissions from Equipment Leaks												
			Default Zero			Leaking @ 100/500 ppmv			Leaking @ 5,000 ppmv			Total VOC Emission Rate (lb/hr)
Component	Service	Total Quantity	Quantity	Emission Factor (lbVOC/hr/ component)	VOC Emission Rate (lb/hr)	Quantity	Emission Factor (lbVOC/hr/ component)	VOC Emission Rate (lb/hr)	Quantity	Emission Factor (lbVOC/hr/ component)	VOC Emission Rate (lb/hr)	
Unit 47 - Truck Loading/Unloading Pipework												
Valves	VAP	340	336	1.72E-05	5.77E-03	3	1.57E-04	5.33E-04	1	4.87E-03	4.96E-03	
	LHC	1300	1283	1.72E-05	2.21E-02	13	1.57E-04	2.04E-03	4	4.87E-03	1.90E-02	
	HHC	40	39	1.72E-05	6.74E-04	0	5.21E-04	2.08E-04	0	4.87E-03	1.95E-03	
Flanges	VAP	383	378	6.83E-07	2.58E-04	4	2.59E-04	9.90E-04	1	6.59E-03	7.56E-03	
	LHC	1463	1443	6.83E-07	9.87E-04	15	2.59E-04	3.79E-03	4	6.59E-03	2.89E-02	
	HHC	45	44	6.83E-07	3.01E-05	0	8.02E-04	3.61E-04	0	6.59E-03	2.97E-03	
Pumps	LHC	0	0	5.29E-05	0.00E+00	0	4.91E-03	0.00E+00	0	3.05E-02	0.00E+00	
	HHC	0	0	5.29E-05	0.00E+00	0	4.91E-03	0.00E+00	0	3.05E-02	0.00E+00	
Compressors	VAP	0	0	8.82E-06	0.00E+00	0	3.85E-04	0.00E+00	0	3.18E-03	0.00E+00	
Subtotal					2.98E-02			7.92E-03			6.53E-02	1.03E-01

Table III-O-4. Annual VOC Emissions from Equipment Leaks												
			Default Zero			Leaking @ 100/500 ppmv			Leaking @ 5,000 ppmv			Total VOC Emission Rate (lb/hr)
Component	Service	Total Quantity	Quantity	Emission Factor (lbVOC/hr/ component)	VOC Emission Rate (lb/hr)	Quantity	Emission Factor (lbVOC/hr/ component)	VOC Emission Rate (lb/hr)	Quantity	Emission Factor (lbVOC/hr/ component)	VOC Emission Rate (lb/hr)	
Unit 51 - Closed Drain System Pipework												
Valves	VAP	0	0	1.72E-05	0.00E+00	0	1.57E-04	0.00E+00	0	4.87E-03	0.00E+00	
	LHC	76	75	1.72E-05	1.29E-03	1	1.57E-04	1.19E-04	0	4.87E-03	1.11E-03	
	HHC	40	39	1.72E-05	6.74E-04	0	5.21E-04	2.08E-04	0	4.87E-03	1.95E-03	
Flanges	VAP	0	0	6.83E-07	0.00E+00	0	2.59E-04	0.00E+00	0	6.59E-03	0.00E+00	
	LHC	87	86	6.83E-07	5.86E-05	1	2.59E-04	2.25E-04	0	6.59E-03	1.72E-03	
	HHC	46	45	6.83E-07	3.06E-05	0	8.02E-04	3.67E-04	0	6.59E-03	3.01E-03	
Pumps	LHC	4	2	5.29E-05	9.95E-05	2	4.91E-03	9.24E-03	0	3.05E-02	1.16E-03	
	HHC	2	2	5.29E-05	1.04E-04	0	4.91E-03	9.82E-05	0	3.05E-02	6.11E-04	
Compressors	VAP	0	0	8.82E-06	0.00E+00	0	3.85E-04	0.00E+00	0	3.18E-03	0.00E+00	
Subtotal					2.26E-03			1.03E-02			9.56E-03	2.21E-02

Table III-O-4. Annual VOC Emissions from Equipment Leaks												
			Default Zero			Leaking @ 100/500 ppmv			Leaking @ 5,000 ppmv			Total VOC Emission Rate (lb/hr)
Component	Service	Total Quantity	Quantity	Emission Factor (lbVOC/hr/ component)	VOC Emission Rate (lb/hr)	Quantity	Emission Factor (lbVOC/hr/ component)	VOC Emission Rate (lb/hr)	Quantity	Emission Factor (lbVOC/hr/ component)	VOC Emission Rate (lb/hr)	
Unit 60 - Product Pipeline												
Valves	VAP	20	20	1.72E-05	3.39E-04	0	1.57E-04	3.13E-05	0	4.87E-03	2.92E-04	
	LHC	150	148	1.72E-05	2.55E-03	2	1.57E-04	2.35E-04	0	4.87E-03	2.19E-03	
	HHC	90	88	1.72E-05	1.52E-03	1	5.21E-04	4.69E-04	1	4.87E-03	4.38E-03	
Flanges	VAP	23	23	6.83E-07	1.55E-05	0	2.59E-04	5.95E-05	0	6.59E-03	4.55E-04	
	LHC	180	178	6.83E-07	1.21E-04	2	2.59E-04	4.66E-04	1	6.59E-03	3.56E-03	
	HHC	80	78	6.83E-07	5.36E-05	1	8.02E-04	6.42E-04	1	6.59E-03	5.27E-03	
Pumps	LHC	10	5	5.29E-05	2.62E-04	5	4.91E-03	2.43E-02	0	3.05E-02	3.05E-03	
	HHC	5	5	5.29E-05	2.49E-04	0	4.91E-03	2.36E-04	0	3.05E-02	1.47E-03	
Compressors	VAP	0	0	8.82E-06	0.00E+00	0	3.85E-04	0.00E+00	0	3.18E-03	0.00E+00	
Subtotal					5.10E-03			2.65E-02			2.07E-02	5.22E-02
TOTAL (lbs/hr)	3.01											
TOTAL (tons/yr)	13.2											

Table III-O-5 Hourly H_2S Emissions from Equipment Leaks

Component	Total Quantity	Default Zero			Leaking @ 500 ppmv			Leaking @ 5,000 ppmv			Total H_2S Emission Rate (lb/hr)
		Quantity	Emission Factor (lbH_2S/hr/ component)	H_2S Emission Rate (lb/hr)	Quantity	Emission Factor (lbH_2S/hr/ component)	H_2S Emission Rate (lb/hr)	Quantity	Emission Factor (lbH_2S/hr/ component)	H_2S Emission Rate (lb/hr)	
Unit 13 - Sulfur Recovery Unit											
Valves	1920	960	1.72E-05	4.13E-03	950	5.21E-04	1.24E-01	10	2.90E-03	6.96E-03	
Flanges	1310	655	6.83E-07	1.12E-04	648	8.02E-04	1.30E-01	7	4.05E-03	6.63E-03	
Pumps	12	6	5.29E-05	7.94E-05	6	4.91E-03	7.29E-03	0	2.00E-02	3.00E-04	
Compressors	0	0	8.82E-06	0.00E+00	0	3.85E-04	0.00E+00	0	1.95E-03	0.00E+00	
TOTAL				4.32E-03			2.61E-01			1.39E-02	2.79E-01

Table III-O-6 Annual H_2S Emissions from Equipment Leaks

Component	Total Quantity	Default Zero			Leaking @ 500 ppmv			Leaking @ 2,500 ppmv			Total H_2S Emission Rate (lb/hr)
		Quantity	Emission Factor (lbH_2S/hr/ component)	H_2S Emission Rate (lb/hr)	Quantity	Emission Factor (lbH_2S/hr/ component)	H_2S Emission Rate (lb/hr)	Quantity	Emission Factor (lbH_2S/hr/ component)	H_2S Emission Rate (lb/hr)	
Unit 13 - Sulfur Recovery Unit											
Valves	1920	960	1.72E-05	4.13E-03	950	5.21E-04	1.24E-01	10	1.73E-03	4.15E-03	
Flanges	1310	655	6.83E-07	1.12E-04	648	8.02E-04	1.30E-01	7	2.49E-03	4.07E-03	
Pumps	12	6	5.29E-05	7.94E-05	6	4.91E-03	7.29E-03	0	1.31E-02	1.97E-04	
Compressors	0	0	8.82E-06	0.00E+00	0	3.85E-04	0.00E+00	0	1.20E-03	0.00E+00	
TOTAL				4.32E-03			2.61E-01			8.42E-03	2.74E-01
TOTAL (tons/yr)	1.22										

Table III-O-7. Benzene Emissions from Equipment Leaks						
Component	Service	Benzene Concentration (weight %)	VOC Emission Rates		Benzene Emission Rates	
			Hourly (lb/hr)	Annual (lb/hr)	Hourly (lb/hr)	Annual (lb/hr)
Unit 1 - Atmospheric Distillation						
Valves	VAP	1.30%	7.73E-02	1.41E-02	1.00E-03	1.84E-04
	LHC	1.21%	2.14E-01	3.92E-02	2.59E-03	4.74E-04
	HHC	0.67%	4.56E-01	9.05E-02	3.05E-03	6.07E-04
Flanges	VAP	1.30%	7.38E-02	6.63E-03	9.59E-04	8.62E-05
	LHC	1.21%	2.04E-01	1.84E-02	2.47E-03	2.22E-04
	HHC	0.67%	4.47E-01	6.44E-02	2.99E-03	4.32E-04
Pumps	LHC	1.21%	2.72E-02	2.51E-02	3.29E-04	3.03E-04
	HHC	0.67%	2.94E-02	3.99E-03	1.97E-04	2.68E-05
Compressors	VAP	1.30%	2.53E-04	4.13E-04	3.29E-06	5.37E-06
Subtotal			1.53E+00	2.63E-01	1.36E-02	2.34E-03
Unit 2 - Vacuum Distillation						
Valves	VAP	0.72%	2.04E-02	3.74E-03	1.47E-04	2.69E-05
	LHC	0.15%	1.60E-02	2.93E-03	2.40E-05	4.39E-06
	HHC	0.22%	2.08E-01	4.14E-02	4.58E-04	9.10E-05
Flanges	VAP	0.72%	2.04E-02	1.83E-03	1.47E-04	1.32E-05
	LHC	0.15%	1.60E-02	1.44E-03	2.40E-05	2.15E-06
	HHC	0.22%	2.14E-01	3.08E-02	4.70E-04	6.78E-05
Pumps	LHC	0.15%	2.18E-03	2.01E-03	3.27E-06	3.01E-06
	HHC	0.22%	1.44E-02	1.96E-03	3.18E-05	4.31E-06
Compressors	VAP	0.72%	5.06E-04	8.26E-04	3.64E-06	5.95E-06
Subtotal			5.12E-01	8.69E-02	1.31E-03	2.19E-04

Table III-O-7. Benzene Emissions from Equipment Leaks						
Component	Service	Benzene Concentration (weight %)	VOC Emission Rates		Benzene Emission Rates	
			Hourly (lb/hr)	Annual (lb/hr)	Hourly (lb/hr)	Annual (lb/hr)
Unit 3 - Gas Plant						
Valves	VAP	1.30%	2.92E-02	5.34E-03	3.79E-04	6.94E-05
	LHC	1.21%	1.56E-01	2.85E-02	1.89E-03	3.45E-04
	HHC	0.67%	0.00E+00	0.00E+00	0.00E+00	0.00E+00
Flanges	VAP	1.30%	2.75E-02	2.47E-03	3.58E-04	3.22E-05
	LHC	1.21%	1.47E-01	1.32E-02	1.78E-03	1.60E-04
	HHC	0.67%	0.00E+00	0.00E+00	0.00E+00	0.00E+00
Pumps	LHC	1.21%	3.98E-02	3.67E-02	4.81E-04	4.44E-04
	HHC	0.67%	0.00E+00	0.00E+00	0.00E+00	0.00E+00
Compressors	VAP	1.30%	0.00E+00	0.00E+00	0.00E+00	0.00E+00
Subtotal			4.00E-01	8.63E-02	4.89E-03	1.05E-03
Unit 4 - Naphtha Hydrotreater						
Valves	VAP	1.34%	6.52E-02	1.19E-02	8.74E-04	1.60E-04
	LHC	1.38%	1.67E-01	3.06E-02	2.31E-03	4.22E-04
	HHC	0.37%	8.30E-02	1.65E-02	3.07E-04	6.11E-05
Flanges	VAP	1.34%	6.15E-02	5.53E-03	8.25E-04	7.41E-05
	LHC	1.38%	1.58E-01	1.42E-02	2.18E-03	1.96E-04
	HHC	0.37%	8.05E-02	1.16E-02	2.98E-04	4.29E-05
Pumps	LHC	1.38%	1.50E-02	1.38E-02	2.07E-04	1.91E-04
	HHC	0.37%	3.79E-03	5.14E-04	1.40E-05	1.90E-06
Compressors	VAP	1.34%	5.06E-04	8.26E-04	6.78E-06	1.11E-05
Subtotal			6.35E-01	1.06E-01	7.02E-03	1.16E-03

Table III-O-7. Benzene Emissions from Equipment Leaks						
Component	Service	Benzene Concentration (weight %)	VOC Emission Rates		Benzene Emission Rates	
			Hourly (lb/hr)	Annual (lb/hr)	Hourly (lb/hr)	Annual (lb/hr)
Unit 5 - Catalytic Reformer						
Valves	VAP	2.93%	3.96E-02	7.24E-03	1.16E-03	2.12E-04
	LHC	2.87%	1.39E-01	2.54E-02	3.99E-03	7.30E-04
	HHC	1.67%	7.07E-02	1.40E-02	1.18E-03	2.35E-04
Flanges	VAP	2.93%	3.85E-02	3.46E-03	1.13E-03	1.01E-04
	LHC	2.87%	1.35E-01	1.22E-02	3.89E-03	3.49E-04
	HHC	1.67%	7.06E-02	1.02E-02	1.18E-03	1.70E-04
Pumps	LHC	2.87%	1.49E-02	1.37E-02	4.26E-04	3.93E-04
	HHC	1.67%	3.84E-03	5.21E-04	6.42E-05	8.71E-06
Compressors	VAP	2.93%	7.59E-04	1.24E-03	2.22E-05	3.63E-05
Subtotal			5.13E-01	8.80E-02	1.30E-02	2.24E-03
Unit 6 - Isomerization (Penex)						
Valves	VAP	2.49%	3.20E-02	5.85E-03	7.97E-04	1.46E-04
	LHC	2.49%	1.34E-01	2.45E-02	3.34E-03	6.11E-04
	HHC	0.62%	5.93E-03	1.18E-03	3.68E-05	7.31E-06
Flanges	VAP	2.49%	3.11E-02	2.80E-03	7.76E-04	6.97E-05
	LHC	2.49%	1.30E-01	1.17E-02	3.25E-03	2.92E-04
	HHC	0.62%	5.93E-03	8.55E-04	3.68E-05	5.30E-06
Pumps	LHC	2.49%	2.08E-02	1.92E-02	5.17E-04	4.77E-04
	HHC	0.62%	4.68E-04	6.35E-05	2.90E-06	3.94E-07
Compressors	VAP	2.49%	0.00E+00	0.00E+00	0.00E+00	0.00E+00
Subtotal			3.61E-01	6.62E-02	8.75E-03	1.61E-03

Table III-O-7. Benzene Emissions from Equipment Leaks						
Component	Service	Benzene Concentration (weight %)	VOC Emission Rates		Benzene Emission Rates	
			Hourly (lb/hr)	Annual (lb/hr)	Hourly (lb/hr)	Annual (lb/hr)
Unit 7 - Hydrogen Production						
Valves	VAP	0.10%	2.66E-02	4.86E-03	2.66E-05	4.86E-06
	LHC	0.10%	7.85E-03	1.44E-03	7.85E-06	1.44E-06
	HHC	0.10%	0.00E+00	0.00E+00	0.00E+00	0.00E+00
Flanges	VAP	0.10%	2.51E-02	2.25E-03	2.51E-05	2.25E-06
	LHC	0.10%	7.41E-03	6.66E-04	7.41E-06	6.66E-07
	HHC	0.10%	0.00E+00	0.00E+00	0.00E+00	0.00E+00
Pumps	LHC	0.10%	0.00E+00	0.00E+00	0.00E+00	0.00E+00
	HHC	0.10%	0.00E+00	0.00E+00	0.00E+00	0.00E+00
Compressors	VAP	0.10%	0.00E+00	0.00E+00	0.00E+00	0.00E+00
Subtotal			6.69E-02	9.21E-03	6.69E-05	9.21E-06
Unit 8 - Distillate Hydrotreater						
Valves	VAP	1.34%	6.70E-02	1.23E-02	8.98E-04	1.64E-04
	LHC	1.38%	1.68E-01	3.07E-02	2.32E-03	4.24E-04
	HHC	0.37%	2.62E-01	5.21E-02	9.70E-04	1.93E-04
Flanges	VAP	1.34%	6.43E-02	5.77E-03	8.61E-04	7.74E-05
	LHC	1.38%	1.61E-01	1.45E-02	2.22E-03	2.00E-04
	HHC	0.37%	2.58E-01	3.72E-02	9.55E-04	1.38E-04
Pumps	LHC	1.38%	3.67E-02	3.39E-02	5.07E-04	4.67E-04
	HHC	0.37%	2.92E-02	3.96E-03	1.08E-04	1.47E-05
Compressors	VAP	1.34%	2.53E-04	4.13E-04	3.39E-06	5.54E-06
Subtotal			1.05E+00	1.91E-01	8.84E-03	1.68E-03

Table III-O-7. Benzene Emissions from Equipment Leaks						
Component	Service	Benzene Concentration (weight %)	VOC Emission Rates		Benzene Emission Rates	
			Hourly (lb/hr)	Annual (lb/hr)	Hourly (lb/hr)	Annual (lb/hr)
Unit 10 - Hydrocracker (Unicracker)						
Valves	VAP	0.78%	6.69E-02	1.22E-02	5.22E-04	9.55E-05
	LHC	1.09%	3.52E-01	6.45E-02	3.84E-03	7.03E-04
	HHC	0.10%	4.51E-01	8.95E-02	4.51E-04	8.95E-05
Flanges	VAP	0.78%	6.52E-02	5.86E-03	5.09E-04	4.57E-05
	LHC	1.09%	3.43E-01	3.09E-02	3.74E-03	3.36E-04
	HHC	0.10%	4.51E-01	6.50E-02	4.51E-04	6.50E-05
Pumps	LHC	1.09%	4.68E-02	4.32E-02	5.10E-04	4.71E-04
	HHC	0.10%	3.05E-02	4.13E-03	3.05E-05	4.13E-06
Compressors	VAP	0.78%	7.59E-04	1.24E-03	5.92E-06	9.67E-06
Subtotal			1.81E+00	3.17E-01	1.01E-02	1.82E-03
Unit 11 - Sour Water Stripping						
Valves	VAP	0.95%	4.41E-04	8.07E-05	4.19E-06	7.66E-07
	LHC	0.95%	2.72E-03	4.97E-04	2.58E-05	4.72E-06
	HHC	0.95%	0.00E+00	0.00E+00	0.00E+00	0.00E+00
Flanges	VAP	0.95%	3.90E-04	3.51E-05	3.71E-06	3.33E-07
	LHC	0.95%	3.08E-03	2.76E-04	2.92E-05	2.63E-06
	HHC	0.95%	0.00E+00	0.00E+00	0.00E+00	0.00E+00
Pumps	LHC	0.95%	6.57E-03	6.06E-03	6.24E-05	5.76E-05
	HHC	0.95%	0.00E+00	0.00E+00	0.00E+00	0.00E+00
Compressors	VAP	0.95%	0.00E+00	0.00E+00	0.00E+00	0.00E+00
Subtotal			1.32E-02	6.95E-03	1.25E-04	6.60E-05

Table III-O-7. Benzene Emissions from Equipment Leaks						
Component	Service	Benzene Concentration (weight %)	VOC Emission Rates		Benzene Emission Rates	
			Hourly (lb/hr)	Annual (lb/hr)	Hourly (lb/hr)	Annual (lb/hr)
Unit 12 - Amine Regeneration						
Valves	VAP	0.10%	5.33E-04	9.75E-05	5.33E-07	9.75E-08
	LHC	0.10%	1.79E-03	3.27E-04	1.79E-06	3.27E-07
	HHC	0.10%	0.00E+00	0.00E+00	0.00E+00	0.00E+00
Flanges	VAP	0.10%	5.03E-04	4.52E-05	5.03E-07	4.52E-08
	LHC	0.10%	3.08E-03	2.76E-04	3.08E-06	2.76E-07
	HHC	0.10%	0.00E+00	0.00E+00	0.00E+00	0.00E+00
Pumps	LHC	0.10%	1.20E-02	1.11E-02	1.20E-05	1.11E-05
	HHC	0.10%	0.00E+00	0.00E+00	0.00E+00	0.00E+00
Compressors	VAP	0.10%	0.00E+00	0.00E+00	0.00E+00	0.00E+00
Subtotal			1.79E-02	1.18E-02	1.79E-05	1.18E-05
Unit 14 - Delayed Coker						
Valves	VAP	0.24%	8.88E-02	1.62E-02	2.13E-04	3.90E-05
	LHC	0.85%	1.69E-01	3.09E-02	1.44E-03	2.63E-04
	HHC	0.18%	5.82E-01	1.16E-01	1.05E-03	2.08E-04
Flanges	VAP	0.24%	8.72E-02	7.83E-03	2.09E-04	1.88E-05
	LHC	0.85%	1.66E-01	1.49E-02	1.41E-03	1.27E-04
	HHC	0.18%	5.87E-01	8.46E-02	1.06E-03	1.52E-04
Pumps	LHC	0.85%	3.14E-02	2.90E-02	2.67E-04	2.46E-04
	HHC	0.18%	5.49E-02	7.46E-03	9.89E-05	1.34E-05
Compressors	VAP	0.24%	2.53E-04	4.13E-04	6.07E-07	9.92E-07
Subtotal			1.77E+00	3.07E-01	5.74E-03	1.07E-03

Table III-O-7. Benzene Emissions from Equipment Leaks						
Component	Service	Benzene Concentration (weight %)	VOC Emission Rates		Benzene Emission Rates	
			Hourly (lb/hr)	Annual (lb/hr)	Hourly (lb/hr)	Annual (lb/hr)
Unit 15 - Butane Conversion Unit						
Valves	VAP	2.49%	1.05E-01	1.92E-02	2.61E-03	4.77E-04
	LHC	2.49%	3.06E-01	5.60E-02	7.63E-03	1.40E-03
	HHC	0.62%	1.54E-01	3.06E-02	9.53E-04	1.89E-04
Flanges	VAP	2.49%	1.00E-01	8.99E-03	2.49E-03	2.24E-04
	LHC	2.49%	2.93E-01	2.64E-02	7.30E-03	6.56E-04
	HHC	0.62%	1.51E-01	2.18E-02	9.37E-04	1.35E-04
Pumps	LHC	2.49%	3.00E-02	2.76E-02	7.46E-04	6.88E-04
	HHC	0.62%	8.99E-03	1.22E-03	5.57E-05	7.56E-06
Compressors	VAP	2.49%	1.26E-03	2.07E-03	3.15E-05	5.14E-05
Subtotal			1.15E+00	1.94E-01	2.28E-02	3.82E-03
Unit 16 - Benzene Reduction Unit						
Valves	VAP	1.24%	3.20E-02	5.85E-03	3.97E-04	7.26E-05
	LHC	1.24%	1.34E-01	2.45E-02	1.66E-03	3.04E-04
	HHC	1.24%	5.93E-03	1.18E-03	7.35E-05	1.46E-05
Flanges	VAP	1.24%	3.11E-02	2.80E-03	3.86E-04	3.47E-05
	LHC	1.24%	1.30E-01	1.17E-02	1.62E-03	1.45E-04
	HHC	1.24%	5.93E-03	8.55E-04	7.35E-05	1.06E-05
Pumps	LHC	1.24%	2.08E-02	1.92E-02	2.58E-04	2.38E-04
	HHC	1.24%	4.68E-04	6.35E-05	5.80E-06	7.87E-07
Compressors	VAP	1.24%	0.00E+00	0.00E+00	0.00E+00	0.00E+00
Subtotal			3.61E-01	6.62E-02	4.47E-03	8.20E-04

Table III-O-7. Benzene Emissions from Equipment Leaks						
Component	Service	Benzene Concentration (weight %)	VOC Emission Rates		Benzene Emission Rates	
			Hourly (lb/hr)	Annual (lb/hr)	Hourly (lb/hr)	Annual (lb/hr)
Unit 26 - Wastewater Treatment Piping						
Valves	VAP	0.0029%	1.15E-02	2.10E-03	3.30E-07	6.04E-08
	LHC	0.0029%	1.15E-02	2.10E-03	3.30E-07	6.04E-08
	HHC	0.0029%	1.65E-01	3.28E-02	4.74E-06	9.43E-07
Flanges	VAP	0.0029%	1.05E-02	9.44E-04	3.02E-07	2.72E-08
	LHC	0.0029%	1.05E-02	9.44E-04	3.02E-07	2.72E-08
	HHC	0.0029%	1.55E-01	2.24E-02	4.46E-06	6.44E-07
Pumps	LHC	0.0029%	1.34E-03	1.24E-03	3.85E-08	3.55E-08
	HHC	0.0029%	9.80E-03	1.33E-03	2.82E-07	3.82E-08
Compressors	VAP	0.0029%	0.00E+00	0.00E+00	0.00E+00	0.00E+00
Subtotal			3.75E-01	6.38E-02	1.08E-05	1.84E-06
Unit 41 - Crude Oil Metering Station						
Valves	VAP	0.45%	1.27E-03	2.32E-04	5.71E-06	1.04E-06
	LHC	0.45%	0.00E+00	0.00E+00	0.00E+00	0.00E+00
	HHC	0.45%	2.24E-02	4.46E-03	1.01E-04	2.00E-05
Flanges	VAP	0.45%	1.54E-03	1.38E-04	6.92E-06	6.22E-07
	LHC	0.45%	0.00E+00	0.00E+00	0.00E+00	0.00E+00
	HHC	0.45%	2.79E-02	4.03E-03	1.26E-04	1.81E-05
Pumps	LHC	0.45%	0.00E+00	0.00E+00	0.00E+00	0.00E+00
	HHC	0.45%	0.00E+00	0.00E+00	0.00E+00	0.00E+00
Compressors	VAP	0.45%	0.00E+00	0.00E+00	0.00E+00	0.00E+00
Subtotal			5.32E-02	8.85E-03	2.39E-04	3.98E-05

Table III-O-7. Benzene Emissions from Equipment Leaks						
Component	Service	Benzene Concentration (weight %)	VOC Emission Rates		Benzene Emission Rates	
			Hourly (lb/hr)	Annual (lb/hr)	Hourly (lb/hr)	Annual (lb/hr)
Unit 42 - Tank Farm Piping						
Valves	VAP	0.90%	0.00E+00	0.00E+00	0.00E+00	0.00E+00
	LHC	0.90%	4.42E-01	8.09E-02	3.98E-03	7.28E-04
	HHC	0.008%	7.11E-01	1.41E-01	5.68E-05	1.13E-05
Flanges	VAP	0.90%	0.00E+00	0.00E+00	0.00E+00	0.00E+00
	LHC	0.90%	4.75E-01	4.26E-02	4.27E-03	3.84E-04
	HHC	0.008%	7.83E-01	1.13E-01	6.27E-05	9.04E-06
Pumps	LHC	0.90%	1.44E-01	1.33E-01	1.30E-03	1.20E-03
	HHC	0.008%	1.18E-01	1.60E-02	9.43E-06	1.28E-06
Compressors	VAP	0.90%	0.00E+00	0.00E+00	0.00E+00	0.00E+00
Subtotal			2.67E+00	5.27E-01	9.67E-03	2.33E-03
Unit 43 - Slop and Flushing Oil Systems						
Valves	VAP	0.95%	0.00E+00	0.00E+00	0.00E+00	0.00E+00
	LHC	0.95%	8.32E-02	1.52E-02	7.90E-04	1.45E-04
	HHC	0.95%	4.23E-01	8.41E-02	4.02E-03	7.99E-04
Flanges	VAP	0.95%	0.00E+00	0.00E+00	0.00E+00	0.00E+00
	LHC	0.95%	8.93E-02	8.03E-03	8.49E-04	7.62E-05
	HHC	0.95%	4.67E-01	6.73E-02	4.43E-03	6.39E-04
Pumps	LHC	0.95%	9.48E-03	8.75E-03	9.01E-05	8.31E-05
	HHC	0.95%	2.46E-02	3.33E-03	2.33E-04	3.17E-05
Compressors	VAP	0.95%	0.00E+00	0.00E+00	0.00E+00	0.00E+00
Subtotal			1.10E+00	1.87E-01	1.04E-02	1.77E-03

Table III-O-7. Benzene Emissions from Equipment Leaks						
			VOC Emission Rates		Benzene Emission Rates	
Component	Service	Benzene Concentration (weight %)	Hourly (lb/hr)	Annual (lb/hr)	Hourly (lb/hr)	Annual (lb/hr)
Unit 44 - Vapor Recovery System Pipework						
Valves	VAP	0.90%	3.58E-02	6.55E-03	3.22E-04	5.90E-05
	LHC	0.90%	3.23E-02	5.92E-03	2.91E-04	5.32E-05
	HHC	0.008%	0.00E+00	0.00E+00	0.00E+00	0.00E+00
Flanges	VAP	0.90%	3.62E-02	3.25E-03	3.26E-04	2.93E-05
	LHC	0.90%	3.27E-02	2.94E-03	2.94E-04	2.64E-05
	HHC	0.008%	0.00E+00	0.00E+00	0.00E+00	0.00E+00
Pumps	LHC	0.90%	2.29E-02	2.11E-02	2.06E-04	1.90E-04
	HHC	0.008%	0.00E+00	0.00E+00	0.00E+00	0.00E+00
Compressors	VAP	0.90%	0.00E+00	0.00E+00	0.00E+00	0.00E+00
Subtotal			1.60E-01	3.98E-02	1.44E-03	3.58E-04
Unit 45 - Gasoline Blending Pipework						
Valves	VAP	0.90%	0.00E+00	0.00E+00	0.00E+00	0.00E+00
	LHC	0.90%	9.06E-03	1.66E-03	8.15E-05	1.49E-05
	HHC	0.90%	0.00E+00	0.00E+00	0.00E+00	0.00E+00
Flanges	VAP	0.90%	0.00E+00	0.00E+00	0.00E+00	0.00E+00
	LHC	0.90%	3.85E-02	3.46E-03	3.46E-04	3.11E-05
	HHC	0.90%	0.00E+00	0.00E+00	0.00E+00	0.00E+00
Pumps	LHC	0.90%	7.49E-02	6.91E-02	6.74E-04	6.22E-04
	HHC	0.90%	0.00E+00	0.00E+00	0.00E+00	0.00E+00
Compressors	VAP	0.90%	0.00E+00	0.00E+00	0.00E+00	0.00E+00
Subtotal			1.22E-01	7.42E-02	1.10E-03	6.68E-04

Table III-O-7. Benzene Emissions from Equipment Leaks						
Component	Service	Benzene Concentration (weight %)	VOC Emission Rates		Benzene Emission Rates	
			Hourly (lb/hr)	Annual (lb/hr)	Hourly (lb/hr)	Annual (lb/hr)
Unit 46 - Rail Loading/Unloading Pipework						
Valves	VAP	0.90%	9.42E-02	1.72E-02	8.48E-04	1.55E-04
	LHC	0.90%	3.08E-01	5.63E-02	2.77E-03	5.07E-04
	HHC	0.008%	0.00E+00	0.00E+00	0.00E+00	0.00E+00
Flanges	VAP	0.90%	1.56E-01	1.40E-02	1.40E-03	1.26E-04
	LHC	0.90%	5.09E-01	4.57E-02	4.58E-03	4.11E-04
	HHC	0.008%	0.00E+00	0.00E+00	0.00E+00	0.00E+00
Pumps	LHC	0.90%	0.00E+00	0.00E+00	0.00E+00	0.00E+00
	HHC	0.008%	0.00E+00	0.00E+00	0.00E+00	0.00E+00
Compressors	VAP	0.90%	0.00E+00	0.00E+00	0.00E+00	0.00E+00
Subtotal			1.07E+00	1.33E-01	9.60E-03	1.20E-03
Unit 47 - Truck Loading/Unloading Pipework						
Valves	VAP	0.90%	6.16E-02	1.13E-02	5.54E-04	1.01E-04
	LHC	0.90%	2.35E-01	4.31E-02	2.12E-03	3.88E-04
	HHC	0.008%	1.42E-02	2.83E-03	1.14E-06	2.26E-07
Flanges	VAP	0.90%	9.81E-02	8.81E-03	8.83E-04	7.93E-05
	LHC	0.90%	3.75E-01	3.37E-02	3.38E-03	3.03E-04
	HHC	0.008%	2.33E-02	3.36E-03	1.86E-06	2.69E-07
Pumps	LHC	0.90%	0.00E+00	0.00E+00	0.00E+00	0.00E+00
	HHC	0.008%	0.00E+00	0.00E+00	0.00E+00	0.00E+00
Compressors	VAP	0.90%	0.00E+00	0.00E+00	0.00E+00	0.00E+00
Subtotal			8.08E-01	1.03E-01	6.93E-03	8.72E-04

Table III-O-7. Benzene Emissions from Equipment Leaks						
Component	Service	Benzene Concentration (weight %)	VOC Emission Rates		Benzene Emission Rates	
			Hourly (lb/hr)	Annual (lb/hr)	Hourly (lb/hr)	Annual (lb/hr)
Unit 51 - Closed Drain System Pipework						
Valves	VAP	0.0029%	0.00E+00	0.00E+00	0.00E+00	0.00E+00
	LHC	0.0029%	1.38E-02	2.52E-03	3.96E-07	7.25E-08
	HHC	0.0029%	1.42E-02	2.83E-03	4.10E-07	8.14E-08
Flanges	VAP	0.0029%	0.00E+00	0.00E+00	0.00E+00	0.00E+00
	LHC	0.0029%	2.23E-02	2.00E-03	6.41E-07	5.76E-08
	HHC	0.0029%	2.37E-02	3.41E-03	6.80E-07	9.81E-08
Pumps	LHC	0.0029%	1.14E-02	1.05E-02	3.27E-07	3.02E-07
	HHC	0.0029%	5.99E-03	8.13E-04	1.72E-07	2.34E-08
Compressors	VAP	0.0029%	0.00E+00	0.00E+00	0.00E+00	0.00E+00
Subtotal			9.13E-02	2.21E-02	2.63E-06	6.35E-07
Unit 60 - Product Pipeline						
Valves	VAP	0.90%	3.62E-03	6.63E-04	3.26E-05	5.96E-06
	LHC	0.90%	2.72E-02	4.97E-03	2.45E-04	4.47E-05
	HHC	0.008%	3.20E-02	6.36E-03	2.56E-06	5.09E-07
Flanges	VAP	0.90%	5.90E-03	5.30E-04	5.31E-05	4.77E-06
	LHC	0.90%	4.62E-02	4.15E-03	4.15E-04	3.73E-05
	HHC	0.008%	4.14E-02	5.97E-03	3.31E-06	4.78E-07
Pumps	LHC	0.90%	3.00E-02	2.76E-02	2.70E-04	2.49E-04
	HHC	0.008%	1.44E-02	1.95E-03	1.15E-06	1.56E-07
Compressors	VAP	0.90%	0.00E+00	0.00E+00	0.00E+00	0.00E+00
Subtotal			2.01E-01	5.22E-02	1.02E-03	3.43E-04
TOTAL			1.68E+01	3.01E+00	1.41E-01	2.55E-02
TOTAL (tons/yr)			1.32E+01		1.12E-01	

Table III-O-8. Organic HAP Emissions from Equipment Leaks

VOC Emission Rate		Ethylbenzene			Hexane			Toluene			Xylenes (total)		
lb/hr	tons/yr	% by weight	lb/hr	tons/yr	% by weight	lb/hr	tons/yr	% by weight	lb/hr	tons/yr	% by weight	lb/hr	tons/yr
16.8	13.2	0.22	0.04	0.03	4.78	0.80	0.63	2.11	0.35	0.28	0.76	0.13	0.10

P. Internal Combustion Engines

Hourly and annual emissions from each of the three internal combustion engines at the proposed refinery are presented in Table III-P. Emissions of all pollutants from internal combustion engines were calculated using heat input capacity and emission factors in much the same manner described for emissions from process heaters in Section III.B, above.

Each internal combustion engine is subject to a fuel use restriction that limits its operation to the equivalent of 200 hours per year, based on equivalent full-load operation. Thus, annual emissions are calculated assuming the hourly emission rate for 200 hours per year.

Emission factors used to calculate emissions from internal combustion engines are shown in Table III-P and were derived as follows:

- For SO_2, the emission factor is derived from Section 3.4 of AP-42, using the maximum allowable fuel sulfur level of 15 parts per million by weight.

- For CO and PM, the permitted emission limits are expressed in units of grams per kilowatt-hour (g/kWh) of power output. These emission factors are converted to units of pounds per horsepower-hour (lb/hp-hr) according to Section 3.4 of AP-42.

- For VOC, the emission factor is taken from Section 3.4 of AP-42.

- For NO_X and VOC, the permitted emission limits are expressed as combined limits on NO_X and nonmethane hydrocarbons ("NO_X + NMHC") in units of g/kWh. For the purpose of calculating NO_X emissions, it is assumed that zero VOC is emitted, i.e., that the NO_X emission rate from each engine is equal to the allowable NO_X + NMHC emission limit. This emission factor is converted to units of pounds per horsepower-hour (lb/hp-hr) according to Section 3.4 of AP-42.

draft

Table III-P. Internal Combustion Engine Emissions

Emission Unit	Capacity		NO_x			SO_2			CO			VOC			PM		
	MMBtu/hr	hp	lb/ hp-hr	lb/hr	ton/year	lb/ MMBtu	lb/hr	ton/year	lb/hp-hr	lb/hr	ton/year	lb/hp-hr	lb/hr	ton/year	lb/hp-hr	lb/hr	ton/year
Fire Water Pump Engine #1	5.46	750	0.0066	4.93	0.49	0.0015	0.008	0.0008	0.0058	4.32	0.43	0.0007	0.53	0.05	0.00033	0.25	0.025
Fire Water Pump Engine #2	5.46	750	0.0066	4.93	0.49	0.0015	0.008	0.0008	0.0058	4.32	0.43	0.0007	0.53	0.05	0.00033	0.25	0.025
Emergency Generator Engine	10.9	1500	0.011	15.8	1.58	0.0015	0.017	0.0017	0.0058	8.63	0.86	0.0007	1.06	0.11	0.00033	0.49	0.049
TOTAL				25.7	2.57		0.033	0.0033		17.3	1.73		2.12	0.21		0.99	0.099

Q. Vehicle Traffic on Paved Areas

Particulate matter emissions will occur at the proposed refinery as a result of vehicle traffic on paved surfaces. This traffic will primarily consist of tank trucks (i.e., cargo tanks) used to transport the refinery's products from the refinery site. These emissions are calculated using the predictive emission factor equation from AP-42 Section 13.2.1. This equation is as follows:

$$E = k \times \left(\frac{sL}{2}\right)^{0.65} \times \left(\frac{W}{3}\right)^{1.5} \times VMT$$

Where:

E = particulate emissions, lbs;
k = particle size multiplier, 0.016 lb/VMT for PM_{10} or 0.082 for PM;
sL = paved surface surface silt loading, g/m^2;
W = average vehicle weight, tons; and
VMT = vehicle miles traveled, miles.

For the paved area that will be traveled by delivery trucks at the proposed refinery, unlike many industrial sources, there are no dust-generating operations that would be expected to cause a silt loading higher than typically encountered on paved public roads. For this reason, the Department has elected to use the silt loading values provided by AP-42 Section 13.2.1 for public paved roads. Although the number of trucks traveling the paved area at the proposed refinery will be substantial, it is not sufficient to qualify the area for the lower silt loading values for "high average daily traffic" public paved roads as provided in AP-42 Section 13.2.1. Therefore, the Department has elected to use a silt loading value of 0.4 g/m^2, which is the value provided in AP-42 Section 13.2.1 for "low average daily traffic" public paved roads. The Department considers this value to be a conservatively high estimate, as AP-42 Section 13.2.1 indicates that the data set used to develop this value "is biased high for 'normal' situations."

According to information provided by the applicant, each cargo tank will carry approximately 8,400 gallons of product. Assuming a liquid density of 6.3 pounds per gallon, the cargo will weigh approximately 26 tons. Assuming an empty weight of 14 tons and a loaded weight of 40 tons, the average vehicle weight will be approximately 27 tons.

For the purpose of calculating short-term and long-term particulate matter emissions, the Department calculated the vehicle miles traveled (VMT) to be 107 miles per day and 19,600 miles per year, respectively. Each of these values is based on a round-trip distance of 0.19 miles (equal to 1,000 feet, representing two traverses of a 500-foot distance) for each truck trip. For the purpose of calculating annual particulate

Draft

matter emissions, the number of truck trips was based upon a daily average throughput of 2.4 million gallons of product shipped from the refinery by truck. Assuming 8,400 gallons of cargo per truck, the Department determine that there would be approximately 103,000 truck trips per year. For the purpose of calculating short-term particulate matter emissions, the Department determined that there could be as many as 566 truck trips per day, based on a daily throughput of 4.8 million gallons of product shipped from the refinery by truck. Because most of the refinery's product is expected to be shipped via pipeline, the Department considers both of these values to be conservatively high.

Hourly and annual PM and PM_{10} emissions are presented in Table III-Q. These emission rates are calculated as follows, using the annual PM_{10} emission rate calculation to illustrate:

$$E_{PM_{10}} = \left(0.016\ \frac{\text{lb}}{\text{mile}}\right) \times \left(\frac{0.4}{2}\right)^{0.65} \times \left(\frac{27}{3}\right)^{1.5} \times \left(19{,}600\ \frac{\text{miles}}{\text{yr}}\right) \times \left(\frac{1\ \text{ton}}{2{,}000\ \text{lb}}\right) = 1.50\ \frac{\text{tons}}{\text{yr}}$$

Table III-Q. Particulate Matter Emissions from Vehicle Traffic on Paved Areas

	PM		PM_{10}	
Emission Unit	Hourly	Annual	Hourly	Annual
Particle size multipler, *k* (lb/VMT)	0.082	0.082	0.016	0.016
Silt loading, *sL* (g/m^2)	0.4	0.4	0.4	0.4
Average vehicle weight (tons)	27	27	27	27
Vehicle miles traveled, *VMT* (miles)	4.5	19,600	4.5	19,600
Emissions (lb/hr or tons/yr)	3.52	7.71	0.69	1.50

draft

IV. REGULATORY APPLICABILITY

The Permittee has identified all applicable regulations that apply to each unit identified in the permit application. Sections IV.A through IV.G of this document present a detailed explanation of the rationale for applicability and non-applicability for certain regulations.

A. Permit Regulations

1. Class I Permit

a. Applicability

The potentially applicable air quality permit regulations are the State of Arizona regulations at Title 18, Chapter 2, Articles 3 and 4.

b. Permit Application Processing

Pursuant to Arizona Administrative Code (A.A.C.) R18-2-302.A and -302.B, a Class I permit is required prior to construction or operation of a major source. The proposed refinery has the potential to emit more than 25 tons per year of hazardous air pollutants and, therefore, would be a major source under Section 112 of the Clean Air Act. (See A.A.C. R18-2-101.64.b.i.) The proposed refinery also has the potential to emit more than 100 tons per year of several regulated air pollutants and is in a listed source category and, therefore, is a major stationary source under Section 302 of the Clean Air Act. (See A.A.C. R18-2-101.64.c.)

2. Nonattainment New Source Review

The site of the proposed refinery is in an area that is in attainment or is unclassifiable for all pollutants. (In other words, the area is not a nonattainment area for any pollutant.) Therefore, the proposed refinery is not a major source pursuant to A.A.C. R18-2-401.9.a and is not subject to the provisions of A.A.C. R18-2-403 through 405.

3. Prevention of Significant Deterioration

a. Applicability

The proposed refinery has the potential to emit more than 100 tons per year of several air pollutants and is a categorical source pursuant to A.A.C. R18-2-401.2. The site of the proposed refinery is in an area that is in attainment or is unclassifiable for all pollutants. (In other words, the area is not a nonattainment area for any pollutant.) Therefore, the proposed refinery is a major source pursuant to A.A.C.

draft

R18-2-401.9.b and is subject to the provisions of R18-2-406. The pollutants for which the proposed refinery's potential to emit is significant are carbon monoxide, nitrogen oxides, sulfur dioxide, particulate matter, PM_{10}, volatile organic compounds, hydrogen sulfide, total reduced sulfur, and reduced sulfur compounds.

b. Best Available Control Technology

Pursuant to A.A.C. R18-2-406.A, the proposed refinery is required to apply Best Available Control Technology (BACT) for each pollutant for which the potential to emit is significant. The determination of BACT is discussed in detail in Section V herein.

c. Air Quality Impact Analysis and Monitoring Requirements

Pursuant to A.A.C. R18-2-407, the Permittee is required to perform an analysis of the air quality impacts of the proposed refinery. The air quality impact analysis is discussed in detail in Section VII herein.

d. Visibility Impact Analysis

Pursuant to A.A.C. R18-2-410, the Permittee is required to perform an analysis of the visibility impacts of the proposed refinery. The visibility impact analysis is discussed in detail in Section VII herein.

B. New Source Performance Standards (NSPS)

The NSPS regulations apply to listed types of emission units and process units (i.e., "affected facilities") for which construction, reconstruction, or modification is commenced after a particular date, specific to that unit or source type. Several of these NSPS regulations are applicable to one or more emission units and process units at the proposed refinery.

1. 40 CFR 60 Subpart A, General Provisions

The provisions of subpart A apply to each affected facility, as specified in the relevant NSPS regulation for that source type. Subpart A contains general requirements for notifications, monitoring, performance testing, reporting, recordkeeping, and operation and maintenance provisions. In addition, § 60.18 of subpart A contains requirements for flares used to comply with other NSPS regulations. The proposed refinery includes two emergency flares subject to these requirements.

Subpart A of 40 CFR part 60 is adopted by reference at A.A.C. R18-2-901.1.

2. 40 CFR 60 Subpart D, Fossil-Fuel-Fired Steam Generators

draft

Subpart D is superseded by subpart Db for affected steam generating units constructed after June 19, 1984.

3. 40 CFR 60 Subpart Da, Electric Utility Steam Generating Units

Subpart Da applies to steam generating units that supply electrical output to a utility power distribution system. The proposed refinery will not include any steam generating units meeting this criterion.

4. 40 CFR 60 Subpart Db, Industrial-Commercial-Institutional Steam Generating Units

Subpart Db applies to each steam generating unit with a heat input capacity of 100 million British Thermal Units per hour (MMBtu/hr) or greater. The proposed refinery includes two steam boilers subject to this regulation. Other combustion devices at the refinery do not combust fuels for the purpose of producing steam, or heating water or any other heat transfer medium. Other than the steam boilers, each of the combustion devices at the refinery is a process heater, as that term is defined at 40 CFR 60.41b, and is specifically excluded from applicability of subpart Db.

The provisions of subpart Db include emission standards for particulate matter (PM), SO_2, and nitrogen oxides (NO_X), as well as monitoring, recordkeeping, performance testing, and reporting requirements. The two steam boilers at the proposed refinery will be subject only to the NO_X emission standards under subpart Db. The regulation does not include any PM or SO_2 emission standards for units firing exclusively natural gas. The applicable provisions of subpart Db are included in Section XXVI of the proposed permit.

Subpart Db is adopted by reference at A.A.C. R18-2-901.4.

5. 40 CFR 60 Subpart Dc, Small Industrial-Commercial-Institutional Steam Generating Units

Subpart Dc applies to each steam generating unit having a heat input capacity between 10 MMBtu/hr and 100 MMBtu/hr. The proposed refinery will not include any steam generating units in this size range. The two steam boilers, as discussed in Section IV.B.4 herein, will have heat input capacities in excess of 100 MMBtu/hr. Other than the two steam boilers, each of the combustion devices at the refinery is a process heater, as that term is defined at 40 CFR 60.41c, and is specifically excluded from applicability of subpart Dc.

6. 40 CFR 60 Subpart J, Petroleum Refineries

Subpart J applies to each fluid catalytic cracking unit catalyst regenerator, each sulfur recovery plant, and each fuel gas combustion device at a petroleum refinery. The proposed refinery will include one sulfur recovery unit and numerous fuel gas combustion devices, but will not include a fluid catalytic cracking unit. (The Hydrocracker Unit serves a similar function to a typical fluid catalytic cracking unit, but uses a fixed reactor bed rather than a fluidized bed. The Catalytic Reforming Unit and the Butane Conversion Unit each includes a catalyst regenerator, but these units are not subject to the provisions of subpart J because they are not associated with fluid catalytic cracking units.)

The proposed refinery will include one sulfur recovery plant comprising two parallel sulfur recovery units. (The United States Environmental Protection Agency (U.S. EPA) has interpreted the term "Claus sulfur recovery plant" in subpart J to include multiple sulfur recovery units fed by a common acid gas header.) The provisions of subpart J that are applicable to the sulfur recovery plant include an SO_2 emission limitation and monitoring, recordkeeping, performance testing, and reporting requirements. These provisions are included in Section XIV of the proposed permit.

The fuel gas combustion devices at the proposed refinery include process heaters and thermal oxidizers. (The U.S. EPA has interpreted the term "fuel gas" in subpart J broadly, to include such gas streams as the vapors captured by wastewater treatment vessels, storage vessel closed vent systems, and gasoline loading rack vapor collection systems.) The provisions of subpart J to which the fuel gas combustion devices are subject include a limitation on fuel gas hydrogen sulfide concentration and monitoring, recordkeeping, performance testing, and reporting requirements. These provisions are included in Sections I, III, IV, V, VII, VIII, X, XII, XV, XVII, XXI, and XXIII of the proposed permit.

Subpart J is adopted by reference at A.A.C. R18-2-901.14.

7. 40 CFR 60 Subpart Kb, Volatile Organic Liquid Storage Vessels

Subpart Kb applies to each storage vessel that is used to store volatile organic liquids and has a capacity of 40 cubic meters or more. The provisions of subpart Kb include requirements for control equipment design, operation, and maintenance, as well as recordkeeping and reporting requirements. For each storage vessel having a capacity less than the threshold values specified in the regulation, and storing liquids having vapor pressures less than the corresponding threshold values specified in the regulation, only the recordkeeping requirements apply.

The proposed refinery will include numerous storage tanks meeting these

criteria. Most of these are Group 1 storage vessels under subpart CC of 40 CFR part 63. Pursuant to § 63.640(n)(2) of subpart CC, Group 1 storage vessels are not required to comply with the provisions of subpart Kb.

The rich amine and lean amine storage tanks in the Amine Regeneration Unit, the MDEA storage tank in the Sulfur Recovery Plant, and a single asphalt storage tank (T-42801) store liquids with vapor pressures below the thresholds for control requirements under § 60.110b(c) of subpart Kb. These tanks are classified as Group 2 storage vessels under subpart CC of 40 CFR part 63. Pursuant to § 63.640(n)(4) of subpart CC, Group 2 storage vessels that would not require control under subpart Kb are not required to comply with the provisions of subpart Kb.

The only tank at the proposed refinery that is required to comply with the provisions of subpart Kb is the Sour Water Tank. This tank will be used to store liquids with a maximum true vapor pressure less than 76.6 kilopascals (kPa). Compliance will be achieved using a fixed roof in combination with an internal floating roof. The applicable provisions of subpart Kb are included in Section XIII of the proposed permit.

It is worth noting that, in addition to the storage tanks discussed above, the proposed refinery will include four tanks in the Wastewater Treatment Plant. These tanks are "flow-through" tanks that, under current U.S. EPA policy, are not "used for the storage of volatile organic liquids" and are not storage vessels subject to the provisions of subpart Kb.

Subpart Kb is adopted by reference at A.A.C. R18-2-901.17.

8. 40 CFR 60 Subpart UU, Asphalt Processing

Subpart UU applies to each asphalt storage tank at a petroleum refinery. The proposed refinery will include one asphalt storage tank subject to the provisions of subpart UU. The applicable provisions of subpart UU, including an opacity limitation and a performance test requirement, are included in Section XX of the proposed permit.

Subpart UU is adopted by reference at A.A.C. R18-2-901.51.

9. 40 CFR 60 Subpart VV, Synthetic Organic Chemicals Manufacturing Industry (SOCMI) Equipment Leaks

Subpart VV applies to process units that produce, as an intermediate final product, any of the synthetic organic chemicals listed at § 60.489 of subpart VV. According to the permit application submitted by the Permittee, none of the chemicals included in that list will be produced by any of the process units at the proposed refinery. Further, pursuant to § 63.640(p) of subpart

CC of 40 CFR part 63, because each process unit at the proposed refinery will be subject to the provisions of subpart CC, compliance with subpart VV would not be required even if one of the listed chemicals were produced at the proposed refinery.

10. 40 CFR 60 Subpart XX, Bulk Gasoline Terminals

Subpart XX applies to loading racks at bulk gasoline terminals, including those that are collocated with petroleum refineries. Pursuant to § 63.640(r) of subpart CC of 40 CFR part 63, because each gasoline loading rack at the proposed refinery will be subject to the provisions of subpart CC, compliance with the provisions of subpart XX is not required.

11. 40 CFR 60 Subpart GGG, Equipment Leaks of VOC in Petroleum Refineries

Subpart GGG applies to petroleum refinery process units and includes requirements relating to equipment leaks. Pursuant to § 63.640(p) of subpart CC of 40 CFR part 63, because each process unit at the proposed refinery will be subject to the provisions of subpart CC, compliance with the provisions of subpart GGG is not required.

12. 40 CFR 60 Subpart NNN, VOC Emissions from SOCMI Distillation Operations

Subpart NNN applies to distillation units that are part of a process unit that produces, as a product, co-product, by-product, or intermediate, any of the synthetic organic chemicals listed at § 60.667 of subpart NNN.

Two process units at the proposed refinery will produce propane and butane, both of which are listed chemicals. These process units contain a total of five distillation units. The Gas Concentration Plant includes Deethanizer, Depropanizer, and Debutanizer Columns and the Butane Conversion Unit includes Splitter and Stabilizer Columns. The provisions of subpart NNN that are applicable to these distillation units, as described below, are included in Sections II and VIII of the proposed permit.

Based on information provided by the Permittee, there will be a total of two vent streams from the five affected distillation units (one from each affected process unit). Compliance with § 60.662(a) of subpart NNN will be achieved for these two vent streams by routing them to the RFG system and combusting the RFG in enclosed combustion devices. Other requirements of subpart NNN include monitoring, recordkeeping and reporting provisions. The monitoring provisions at § 60.663(a) and (c) of subpart NNN include firebox temperature monitoring for every combustion device used to combust affected distillation unit vent streams. The Permittee has indicated that it will

request from the U.S. EPA Administrator approval of an alternative monitoring plan, as many other petroleum refineries have done for vent streams subject to subpart NNN.

Other process units at the proposed refinery do not produce listed synthetic organic chemicals and, therefore, are not subject to the provisions of subpart NNN.

Subpart NNN is adopted by reference at A.A.C. R18-2-901.65.

13. 40 CFR 60 Subpart QQQ, VOC Emissions from Petroleum Refinery Wastewater Systems

Subpart QQQ applies to wastewater treatment facilities at petroleum refineries.

The Permittee has committed to treat all wastewater streams at the proposed refinery as Group 1 wastewater streams, pursuant to subpart CC of 40 CFR part 63. Pursuant to § 63.640(o) of subpart CC, wastewater treatment facilities that are used to treat Group 1 wastewater streams are not required to comply with the provisions of subpart QQQ.

14. 40 CFR 60 Subpart RRR, VOC Emissions from SOCMI Reactor Processes

Subpart RRR applies to reactor processes that are part of a process unit that produces, as a product, co-product, by-product, or intermediate, any of the synthetic organic chemicals listed at § 60.707 of subpart RRR.

Two process units at the proposed refinery will produce propane and butane, both of which are listed chemicals. One of these, the Gas Concentration Plant, does not include any reactor processes. The other, the Butane Conversion Unit, includes three reactor processes. The provisions of subpart RRR that are applicable to the Butane Conversion Unit reactor processes, as described below, are included in Section VIII of the proposed permit.

Based on information provided by the Permittee, there will be one vent stream from the Butane Conversion Unit reactor processes. Compliance with § 60.702(a) of subpart RRR will be achieved for this vent stream by routing it to the RFG system and combusting the RFG in enclosed combustion devices. Other requirements of subpart RRR include monitoring, recordkeeping and reporting provisions.

Other process units at the proposed refinery do not produce listed synthetic organic chemicals and, therefore, are not subject to the provisions of subpart RRR.

Subpart RRR is adopted by reference at A.A.C. R18-2-901.69.

C. National Emission Standards for Hazardous Air Pollutants (NESHAP)

1. 40 CFR 61 Subpart A, General Provisions

The provisions of subpart A apply to each affected facility, as specified in the relevant NESHAP regulation for that source type. Subpart A contains general requirements for notifications, monitoring, performance testing, reporting, recordkeeping, and operation and maintenance provisions.

Subpart A of 40 CFR part 61 is adopted by reference at A.A.C. R18-2-1101.A.1.

2. 40 CFR 61 Subpart FF, Benzene Waste Operations

Subpart FF includes requirements for reducing the quantity of benzene in facility waste and for the design and operation of equipment used to handle or treat benzene-containing wastes. The specific requirements for a particular facility depend on the uncontrolled quantity of benzene in facility waste. Facilities with less than 10 metric tons of benzene waste per year can perform recordkeeping to document that fact and are then subject to substantially less stringent control requirements.

The applicable provisions of subpart FF are included in Section XXIII of the proposed permit. Several provisions of subpart FF have been streamlined out of the permit, and several other provisions have been enhanced in the proposed permit terms in order to reflect both the subpart FF requirements and other, more stringent requirements. These are as follows:

- Under the Prevention of Significant Deterioration (PSD) BACT requirements (see Section V herein), the proposed refinery will include controls that are at least equivalent to the control requirements under subpart FF. As a result, the Permittee has indicated to the Department that it will comply with the provisions for larger facilities. Therefore, the requirements for smaller facilities have been streamlined out of the permit.

- One of the compliance options for benzene waste treatment available at § 61.348(a)(1) of subpart FF involves incineration, but the Permittee has not requested permission to install a waste incinerator as part of the proposed refinery, so the requirements pertaining to waste incinerators have been streamlined out of the permit.

- The Permittee has proposed as BACT the use of closed-vent systems and control devices for all waste management and treatment

operations, so the regulatory requirements for floating-roof tanks have been streamlined out of the permit.

- The Permittee has not requested permission to construct any surface impoundments, so the regulatory requirements for surface impoundments have been streamlined out of the permit.

- The Permittee has proposed as BACT the use of dual carbon canisters to control emissions from individual drain systems that are not vented to enclosed combustion devices. This is more stringent than the requirement for single carbon canisters at § 61.349(a)(2)(ii), and the permit requirements for monitoring and recordkeeping for these control devices have been enhanced accordingly.

- Other than the dual carbon canisters approved for use on certain individual drain systems, the only control devices approved for use in complying with subpart FF are the Tank Farm Thermal Oxidizer (if any non-aqueous waste streams should be stored in a "Group B" storage tank) and the Wastewater Treatment Plant Thermal Oxidizer. One of the compliance options for these control devices, pursuant to § 61.349(a)(2)(i)(C) of subpart FF, is a requirement to meet a specified minimum combustion zone temperature and a specified minimum combustion zone residence time. The PSD BACT requirements for these control devices are more stringent and are expressed in similar terms, so the operational requirements under subpart FF have been streamlined out of the permit.

Subpart FF is adopted by reference at A.A.C. R18-2-1101.A.15.

3. 40 CFR 63 Subpart A, General Provisions

The provisions of subpart A apply to each affected facility, as specified in the relevant NESHAP regulation for that source type. Subpart A contains general requirements for notifications, monitoring, performance testing, reporting, recordkeeping, and operation and maintenance provisions.

Subpart A of 40 CFR part 63 is adopted by reference at A.A.C. R18-2-1101.B.1.

4. 40 CFR 63 Subpart B, Control Technology Determinations for Major Sources in Accordance with Clean Air Act §§ 112(g) and 112(j)

Most of the regulations in 40 CFR part 63, including subpart F through subpart DDDDD discussed below, are source category-specific NESHAP regulations implementing Clean Air Act § 112(d). Each of these source category-specific NESHAP includes the U.S. EPA's determination of the

Maximum Achievable Control Technology (MACT) for the specified source category.

For emission units that are located at major sources of HAPs and that are not subject to a source category-specific NESHAP, Clean Air Act §§ 112(g) and 112(j) generally require case-by-case determinations of MACT. These requirements are implemented through the provisions of subpart B of 40 CFR part 63. Subpart B is adopted by reference at A.A.C. R18-2-1101.B.2.

There are two separate and distinct sets of requirements in subpart B. The first, at §§ 63.40 through 63.44, implements § 112(g) of the Clean Air Act. Case-by-case MACT determinations pursuant to §§ 63.40 through 63.44 are required by A.A.C. R18-2-302.D. These provisions apply to construction or reconstruction of major sources of HAPs at which there are HAP-emitting units that have neither been regulated nor exempted from regulation under a source category-specific NESHAP.

For the proposed refinery, all HAP-emitting units are exempt from the provisions of §§ 63.40 through 63.44 because they either are regulated or are specifically exempted from regulation under a source category-specific NESHAP.

The second set of provisions, at §§ 63.50 through 63.56 of subpart B, implements § 112(j) of the Clean Air Act. These provisions apply to major sources of HAPs in source categories for which the U.S. EPA has failed to promulgate a source category-specific NESHAP within 18 months after the scheduled promulgation date for that regulation. These provisions are not applicable to any emissions units at the proposed refinery.

5. 40 CFR 63 Subparts F and G, SOCMI Process Units

Subparts F and G apply to chemical manufacturing process units that manufacture, as a primary product, any of the synthetic organic chemicals listed in Table 1 of subpart F. None of the process units at the proposed refinery will produce as its primary product any of the listed chemicals. Therefore, none of the process units at the proposed refinery is subject to subparts F or G. However, specific requirements for storage vessels under subpart G are applicable to certain storage tanks at the proposed refinery pursuant to § 63.646(a) of subpart CC of 40 CFR part 63.

6. 40 CFR 63 Subpart H, Equipment Leaks

Subpart H applies to pumps, compressors, agitators, pressure relief devices, sampling connection systems, valves, connectors, and instrumentation systems. This regulation is applicable to specific categories of sources where other applicable NESHAP regulations reference its requirements. It is

applicable to the proposed refinery pursuant to § 63.648(a) of subpart CC of 40 CFR part 63.

The requirements of subpart H include prescribed procedures and frequencies for leak detection and repair as well as associated recordkeeping and reporting provisions. Under the PSD BACT requirements (see Section V herein), the Permittee has committed to use a lower leak definition than is required by subpart H, which has the effect of making the leak detection and repair provisions more stringent. The applicable provisions of subpart H are included in Section XXIV of the proposed permit.

Subpart H is adopted by reference at A.A.C. R18-2-1101.B.6.

7. 40 CFR 63 Subpart R, Gasoline Distribution Facilities

Subpart R applies to bulk gasoline terminals, but exempts gasoline terminals that are contiguous with a petroleum refinery and that operate under Standard Industrial Classification code 2911 (facilities with petroleum refining as their primary business activity). The gasoline loading racks at the proposed refinery meet this exemption and, therefore, are not affected sources to which subpart R is applicable. Compliance with several provisions of subpart R is required for the proposed refinery's gasoline loading racks, however, pursuant to subpart CC of 40 CFR part 63, as discussed below.

8. 40 CFR 63 Subpart CC, Petroleum Refineries

Subpart CC is a far-reaching regulation that imposes HAP emission standards for various refinery operations, including storage vessels, equipment leaks, wastewater streams, gasoline loading racks, process vents, and marine tank vessel loading operations. Many of the emission units at the proposed refinery are subject to these emission standards.

With the exception of the four tanks used in the Wastewater Treatment Plant and the six pressurized Group "D" storage tanks, all of the tanks at the proposed refinery are subject to the storage vessel provisions of subpart CC. (These types of tanks are specifically excluded from the definition of *storage vessel* at § 63.641 of subpart CC.) The rich amine and lean amine storage tanks in the Amine Regeneration Unit and the MDEA storage tank in the Sulfur Recovery Plant will store low-vapor-pressure products and are classified as Group 2 storage vessels under subpart CC. These provisions of subpart CC that are applicable to these storage tanks include recordkeeping and reporting requirements. These requirements are included in Sections XII and XIV of the proposed permit.

The remaining 51 storage tanks at the proposed refinery are classified as Group 1 storage vessels and are subject to the control requirements under

subpart CC. The control requirements for these Group 1 storage vessels are the requirements set forth at § 63.119 of subpart G of 40 CFR part 63, pursuant to § 63.646(a) of subpart CC. Several compliance options are available, including the use of an external floating roof, a fixed roof with an internal floating roof, or a closed-vent system and control device. The 51 storage tanks at the proposed refinery are grouped, for the purposes of the draft air quality permit, by the control option selected.

The eight Group "A" storage tanks will comply with § 63.119(e) of subpart G, which requires that the control device maintain at least 95 percent control of organic HAP emissions. These tanks will be equipped with closed-vent systems vented to a compression system, which in turn routes the compressed vapors to the RFG system. This system meets the PSD BACT requirements and will achieve substantially greater than 95 percent control efficiency. Additional requirements under subpart G include an engineering design evaluation to demonstrate initial compliance, recordkeeping, and reporting provisions. The provisions of subpart CC (and, by reference, subpart G) that are applicable to the Group "A" storage tanks are included in Section XVI of the proposed permit.

The twenty-seven Group "B" storage tanks will also comply with § 63.119(e) of subpart G. Each of these tanks will be equipped with an internal floating roof, a fixed roof, and a closed-vent system vented to the Tank Farm Thermal Oxidizer. This configuration satisfies the PSD BACT requirements and will achieve substantially greater than 95 percent control efficiency, which is required by § 63.119(e). Additional requirements under subpart G include an engineering design evaluation to demonstrate initial compliance, recordkeeping, and reporting provisions. The provisions of subpart CC (and, by reference, subpart G) that are applicable to the Group "B" storage tanks are included in Section XVII of the proposed permit. It should be noted that the requirements under § 63.119(b) of subpart G, relating to internal floating roofs, are not applicable to the Group "B" storage tanks because the applicant has chosen to comply with the § 63.119(e) compliance option.

The twenty Group "C" storage tanks will comply with § 63.119(c) of subpart G. Each of these tanks will be equipped with an external floating roof. Additional requirements under subpart G include periodic inspections, recordkeeping, and reporting provisions. The applicable provisions of subpart CC (and, by reference, subpart G) that are applicable to the Group "C" storage tanks are included in Section XVIII of the proposed permit.

Equipment leaks at the proposed refinery will be subject to the leak detection and repair program requirements in subpart H of 40 CFR part 63, pursuant to § 63.648(a) of subpart CC. The applicable requirements of subpart H for the proposed refinery are discussed in Section IV.C.6 herein.

draft

For each wastewater stream that is both a *process wastewater stream* as defined at § 61.341 of subpart FF of 40 CFR part 61 and a *Group 1 wastewater stream* as defined at § 63.641 of subpart CC, the proposed refinery is required to comply with the provisions of subpart FF, pursuant to § 63.647(a) of subpart CC. The applicable requirements of subpart FF for the proposed refinery are discussed in Section IV.C.2 herein.

Gasoline loading racks at the proposed refinery will be subject to the loading rack provisions of subpart CC. The control requirements for these include provisions for vapor collection and processing systems and for vapor tightness of truck and railcar cargo tanks. The applicable provisions for vapor collection and processing systems are those set forth at § 63.422(b) of subpart R of 40 CFR part 63, pursuant to § 63.650(a) of subpart CC. The emission standard under subpart R and subpart CC is a VOC emission limit of 10 milligrams per liter of gasoline loaded. Under the PSD BACT requirements, the Permittee has committed to achieve a substantially more stringent emission standard using a vapor recovery system and a thermal oxidizer in series. The BACT emission limit in the proposed permit is 1.25 pounds per million gallons of gasoline loaded, which is equal to 0.15 milligrams per liter of gasoline loaded. (See Section V.G herein for a discussion of the BACT analysis for the gasoline loading racks.) The applicable provisions for vapor tightness of truck and railcar cargo tanks are those set forth at § 60.502(e) of subpart XX of 40 CFR part 60, pursuant to § 63.646(a) of subpart CC and § 63.422(c) of subpart R of 40 CFR part 63. In addition to these emission standards, the gasoline loading racks are subject to periodic inspection, testing, monitoring, recordkeeping, and reporting provisions under subpart XX of 40 CFR part 60 and under subpart R of 40 CFR part 63. These provisions are included in Section XXI of the proposed permit.

The vents from the Rich Amine Three Phase Separator, associated with the Amine Regeneration Unit, and the Sour Water Flash Drum, associated with the Sour Water Stripper, are miscellaneous process vents subject to the provisions of subpart CC. Each of these vents will be routed to the Sulfur Recovery Plant Thermal Oxidizer for control of VOC emissions in accordance with the provisions of subpart CC. These provisions are included in Sections XII, XIII, and XIV of the proposed permit. All remaining process vents at the refinery are specifically excluded from the definition of *miscellaneous process vent* at § 63.641 of subpart CC. These include equipment leaks; relief valve discharges; vents from storage tanks; episodic releases associated with startup, shutdown, or malfunction; gaseous streams routed to the RFG system; *in situ* sampling systems; one catalytic reforming unit catalyst regeneration vent; one hydrogen plant process vent; coke drum depressuring vents; sulfur recovery plant vents; wastewater collection system vents; hydrogen plant reformer/stripper vents; and the Butane Conversion Unit catalyst regenerator vent. The Butane Conversion Unit catalyst

regenerator vent is excluded because its vent stream will contain less than 20 parts per million volume (ppmv) organic HAP.

Based on information provided by the Permittee, the proposed refinery will not include any marine tank vessel loading operations.

Subpart CC is adopted by reference at A.A.C. R18-2-1101.B.21.

9. 40 CFR 63 Subpart UUU, Petroleum Refinery Catalytic Cracking Units, Catalytic Reforming Units, and Sulfur Recovery Units

Subpart UUU imposes HAP emission standards for the Sulfur Recovery Plant and the Catalytic Reforming Unit Catalyst Regenerator Vent. Subpart UUU also includes requirements for fluidized catalytic cracking unit catalyst regeneration vents, but the proposed refinery will not include a fluidized catalytic cracking unit.

Each of the two sulfur recovery units at the proposed refinery is subject to the control requirements under § 63.1568(a)(1) of subpart UUU. These control requirements, as well as the applicable testing, monitoring, recordkeeping, and reporting provisions for sulfur recovery units, are essentially identical to the requirements in subpart J of 40 CFR part 60. The applicable emission standard under these regulations is an exhaust SO_2 concentration of 250 ppmv and is included in the proposed permit. In addition, under the PSD BACT requirements (see Section V herein), the Permittee has committed to achieve a substantially more stringent SO_2 emission limit of 33.6 pounds per hour (lb/hr), which equates to an exhaust SO_2 concentration of approximately 50 ppmv at maximum operating rate. The provisions of subpart UUU that are applicable to the sulfur recovery units are included in Section XIV of the proposed permit.

The catalytic reforming unit catalyst regeneration vent at the proposed refinery is subject to the control requirements under subpart UUU. These requirements include an emission limit for total organic compounds, as a surrogate for organic HAP, under § 63.1566(a) and an emission limit for hydrogen chloride, as a surrogate for inorganic HAP, under § 63.1567(a). The applicable provisions of subpart UUU also include testing, monitoring, recordkeeping, and reporting provisions. The provisions of subpart UUU that are applicable to the catalytic reforming unit are included in Section V of the proposed permit.

Two units at the proposed refinery that are not subject to the provisions of subpart UUU warrant discussion. The Hydrocracker Unit serves a similar function to a typical fluidized catalytic cracking unit, but uses a fixed reactor bed rather than a fluidized bed. The regeneration of the hydrocracking catalyst occurs off-site and infrequently, in contrast to the continuous,

internal catalyst regeneration process characteristic of fluidized catalytic cracking units. The Butane Conversion Unit includes a continuous, internal catalyst regeneration process, but the vent from this process is not regulated by subpart UUU because the process unit is neither a catalytic cracking unit nor a catalytic reforming unit, as those terms are defined at § 63.1579 of subpart UUU.

Subpart UUU has not been adopted by reference into the Arizona Administrative Code, and authority to administer and enforce this regulation has not been delegated to the Director by the U.S. EPA. The Department intends to request this delegation in the near future, at which time the regulation will be incorporated by reference in Article 11 of A.A.C. R18-2.

10. 40 CFR 63 Subpart EEEE, Organic Liquids Distribution (Non-Gasoline)

The proposed refinery will include facilities for loading of liquid products into rail cars and tank trucks. All facilities for loading of gasoline products and distillate products are exempt from the provisions of subpart EEEE because the term "organic liquid" is defined at 40 CFR § 63.2406 to exclude gasoline, aviation gasoline, No. 1 distillate oil, No. 2 distillate oil, asphalt, and heavier distillate oils and fuel oils. Facilities for loading of LPG are exempt because the term "organic liquid" is defined to exclude liquids that contain less than 5 percent organic HAP by weight.

11. 40 CFR 63 Subpart ZZZZ, Stationary Reciprocating Internal Combustion Engines

The proposed refinery will include three stationary, reciprocating internal combustion engines used to drive an emergency electrical generator and two fire water pumps. Each of these engines meets the criteria to be classified as an emergency stationary reciprocating internal combustion engine under subpart ZZZZ. As such, each engine is exempt from all substantive requirements of the regulation.

12. 40 CFR 63 Subpart DDDDD, Industrial Boilers and Process Heaters

The proposed refinery will include two steam boilers fired with natural gas and eighteen process heaters fired with natural gas or RFG. These emission units will comply with the applicable provisions of subpart DDDDD, including a work practice standard for minimizing organic HAP emissions. This work practice standard is expressed as an exhaust gas CO concentration of 400 ppmvd corrected to 3 percent oxygen. The averaging period for this work practice standard is a 30-day rolling average for units with heat input capacity of 100 MMBtu/hr or greater and a 3-test-run average (effectively equivalent to a minimum 3-hour average) for units less than 100 MMBtu/hr). The work practice standard does not apply during periods of startup,

shutdown, or malfunction and also does not apply when the unit is operating at less than 50 percent of its rated heat input capacity. These work practice requirements, as well as the applicable monitoring, recordkeeping, and reporting provisions, are included in the proposed permit, in each section that covers a process heater or steam boiler.

D. Arizona Administrative Code

1. A.A.C. R18-2-602, Open Burning

A.A.C. R18-2-602 prohibits open outdoor fires except under certain, specified conditions. The provisions of this regulation are included in Section XXIX of the proposed permit.

2. A.A.C. R18-2-604, Open Areas, Dry Washes, or Riverbeds

A.A.C. R18-2-604 restricts fugitive dust emissions from open areas including, but not limited to, driveways, parking areas, vacant lots, dry washes, and riverbeds. The provisions of this regulation are included in Section XXIX of the proposed permit.

3. A.A.C. R18-2-605, Roadways and Streets

A.A.C. R18-2-605 restricts fugitive dust emissions from roadways and alleys, including the transportation of materials over those roadways or alleys. The provisions of this regulation are included in Section XXIX of the proposed permit.

4. A.A.C. R18-2-606, Material Handling

A.A.C. R18-2-606 restricts fugitive dust emissions from nonpoint sources associated with operations such as material crushing, screening, handling, transporting, or conveying. The provisions of this regulation are included in Section XXIX of the proposed permit. The provisions of this regulation are not applicable to any of the petroleum coke handling operations identified in Section XI of the proposed permit because each of these operations has an identifiable emission point.

5. A.A.C. R18-2-607, Storage Piles

A.A.C. R18-2-607 restricts fugitive dust emissions from material stacking, piling, or similar storage methods. The provisions of this regulation are included in Sections XI and XXIX of the proposed permit.

6. A.A.C. R18-2-612, Opacity of Emissions from Nonpoint Sources

draft

A.A.C. R18-2-612 restricts opacity of visible emissions from nonpoint sources. The provisions of this regulation are included in Sections XI and XXIX of the proposed permit.

7. A.A.C. R18-2-702, General Provisions for Existing Point Sources

A.A.C. R18-2-702 restricts opacity of visible emissions from point sources. The provisions of this regulation are included in Sections V, VIII, XI, XXIII, XXVII, and XXIX of the proposed permit.

8. A.A.C. R18-2-703, Steam Generators and Fuel-Burning Equipment

A.A.C. R18-2-703 includes particulate matter and SO_2 emission standards for steam generating units and other fuel-burning equipment. This regulation is not applicable to any emission unit at the proposed refinery. The fuel-burning emission units at the proposed refinery, regardless of heat input capacity, are not regulated by A.A.C. R18-2-703 because they are covered by applicable new source performance standards at Title 18, Chapter 2, Article 9 of the State of Arizona regulations. (Specifically, subpart Db of 40 CFR part 60 is applicable to the Steam Boilers; subpart J is applicable to the Sulfur Recovery Plant Thermal Oxidizer and to all process heaters; subpart Kb is applicable to the Tank Farm Thermal Oxidizer; subpart XX is applicable to the Loading Rack Thermal Oxidizers; and subpart QQQ is applicable to the Wastewater Treatment Plant Thermal Oxidizer.) Thus, the fuel-burning emission units are not "existing sources" as that term is defined at A.A.C. R18-2-101.41.

9. A.A.C. R18-2-704, Incinerators

A.A.C. R18-2-704 limits visible emissions and particulate matter emissions from incinerators. This regulation is not applicable to any emission unit at the proposed refinery. The thermal oxidizers that will be used to control emissions of VOC, organic HAP, and reduced sulfur compounds from the Sulfur Recovery Plant, Group "B" Storage Tanks, Truck and Rail Car Loading Racks, and Wastewater Treatment Plant are not regulated by A.A.C. R18-2-704 because they are covered by applicable new source performance standards at Title 18, Chapter 2, Article 9 of the State of Arizona regulations. (Specifically, subpart J of 40 CFR part 60 is applicable to the Sulfur Recovery Plant Thermal Oxidizer; subpart Kb is applicable to the Tank Farm Thermal Oxidizer; subpart XX is applicable to the Loading Rack Thermal Oxidizers; and subpart QQQ is applicable to the Wastewater Treatment Plant Thermal Oxidizer.) Thus, the thermal oxidizers are not "existing sources" as that term is defined at A.A.C. R18-2-101.41.

10. A.A.C. R18-2-709, Petroleum Refineries

A.A.C. R18-2-709 includes emission standards for fuel gas combustion devices at petroleum refineries. This regulation is not applicable to any combustion device at the proposed refinery because each such device is covered by an applicable new source performance standard at Title 18, Chapter 2, Article 9 of the State of Arizona regulations. (Specifically, subpart J of 40 CFR part 60 is applicable to each fuel gas combustion device.) Thus, the fuel gas combustion devices are not "existing sources" as that term is defined at A.A.C. R18-2-101.41.

11. A.A.C. R18-2-710, Petroleum Liquid Storage Vessels

A.A.C. R18-2-710 includes emission standards for petroleum liquid storage tanks. This regulation is not applicable to any storage tank at the proposed refinery because each storage tank is covered by an applicable new source performance standard at Title 18, Chapter 2, Article 9 of the State of Arizona regulations. (Specifically, subpart Kb of 40 CFR part 60 is applicable to each storage tank.) Thus, the storage tanks are not "existing sources" as that term is defined at A.A.C. R18-2-101.41.

12. A.A.C. R18-2-719, Stationary Rotating Machinery

A.A.C. R18-2-719 limits visible emissions and emissions of PM and SO_2 from internal combustion engines. The visible emissions limitation is included in Section XXVIII of the proposed permit. The PM and SO_2 emission limits are less stringent than the applicable BACT emission limits under all operating conditions and, for this reason, have been streamlined out of the proposed permit.

13. A.A.C. R18-2-724, Fossil-fuel Fired Equipment

A.A.C. R18-2-724 includes particulate matter and SO_2 emission standards for steam generating units and other fuel-burning equipment. This regulation is not applicable to any emission unit at the proposed refinery. The fuel-burning emission units at the proposed refinery are not regulated by A.A.C. R18-2-724, regardless of heat input capacity, because they are covered by applicable new source performance standards at Title 18, Chapter 2, Article 9 of the State of Arizona regulations. (Specifically, subpart Db of 40 CFR part 60 is applicable to the Steam Boilers; subpart J is applicable to the Sulfur Recovery Plant Thermal Oxidizer and to all process heaters; subpart Kb is applicable to the Tank Farm Thermal Oxidizer; subpart XX is applicable to the Loading Rack Thermal Oxidizers; and subpart QQQ is applicable to the Wastewater Treatment Plant Thermal Oxidizer.) Thus, the fuel-burning emission units are not "existing sources" as that term is defined at A.A.C. R18-2-101.41.

14. A.A.C. R18-2-726, Sandblasting Operations

draft

A.A.C. R18-2-726 restricts fugitive dust emissions from abrasive blasting operations. The provisions of this regulation are included in Section XXIX of the proposed permit.

15. A.A.C. R18-2-727, Spray Painting Operations

A.A.C. R18-2-727 restricts VOC emissions from spray painting operations. The provisions of this regulation are included in Section XXIX of the proposed permit.

16. A.A.C. R18-2-730, Unclassified Sources

A.A.C. R18-2-730 restricts emissions of particulate matter, SO_2, and NO_X from sources not otherwise regulated under Articles 7, 9, or 11; restricts emissions of hydrogen sulfide; and prohibits the causation of air pollution. The provisions of this regulation are included in Sections XI, XXIII, XXVII, and XXIX of the proposed permit.

17. A.A.C. R18-2-801, General Provisions for Mobile Sources

A.A.C. R18-2-801 restricts opacity of visible emissions from mobile sources not otherwise regulated under Article 8. The provisions of this regulation are included in Section XXIX of the proposed permit.

18. A.A.C. R18-2-802, Off-Road Machinery

A.A.C. R18-2-802 restricts opacity of visible emissions from trucks, graders, scrapers, rollers, locomotives, and other machinery not normally driven on completed public roadways. The provisions of this regulation are included in Section XXIX of the proposed permit.

19. A.A.C. R18-2-804, Roadway and Site-Cleaning Machinery

A.A.C. R18-2-804 restricts opacity of visible emissions from roadway and site cleaning machinery, including the exhaust from such machinery. The provisions of this regulation are included in Section XXIX of the proposed permit.

20. Article 9, New Source Performance Standards

A.A.C. R18-2-901 incorporates by reference those federal NSPS regulations for which the Department has been delegated enforcement authority by the U.S. EPA. Applicable and non-applicable NSPS regulations are discussed in Section IV.B herein.

draft

21. Article 11, Federal Hazardous Air Pollutants

A.A.C. R18-2-1101 incorporates by reference those federal NESHAP regulations for which the Department has been delegated enforcement authority by the U.S. EPA. Applicable and non-applicable NESHAP regulations are discussed in Section IV.C herein.

E. Compliance Assurance Monitoring

The Compliance Assurance Monitoring (CAM) rule is codified at 40 CFR part 64, and the CAM monitoring requirements are mandatory elements of the Class I permit pursuant to A.A.C. R18-2-306(A)(3)(a)(i). Generally, the rule applies wherever the following three criteria are met:

- The emission unit is subject to an emission limitation or standard for a particular pollutant;
- The emission unit uses a control device to achieve compliance with the emission limitation or standard; and
- The emission unit has potential, pre-control device emissions greater than the applicable major source threshold.

The proposed refinery will include eight pollutant-specific emission units meeting these criteria:

- NO_X emissions controlled by the Hydrogen Reformer Heater selective catalytic reduction unit;
- H_2S emissions from the Sulfur Recovery Unit;
- VOC emissions from the Tank Farm Thermal Oxidizer;
- VOC emissions from the Rail Car Loading Rack Thermal Oxidizer;
- VOC emissions from the Truck Loading Rack Thermal Oxidizer;
- VOC emissions from the Wastewater Treatment Plant Thermal Oxidizer;
- PM emissions from the Wastewater Treatment Plant Spray Dryer; and
- PM emissions from the Cooling Tower.

However, pursuant to § 64.2(b)(1)(vi), the provisions of the CAM rule do not

draft

apply where the applicable emission limitation or standard is one "for which a part 70 or 71 permit specifies a continuous compliance determination method." This term is defined at § 64.1 as follows:

"... a method, specified by the applicable standard or an applicable permit condition, which: (1) Is used to determine compliance with an emission limitation or standard on a continuous basis, consistent with the averaging period established for the emission limitation or standard; and (2) Provides data either in units of the standard or correlated directly with the compliance limit."

Four of the eight pollutant-specific emission units listed above qualify for this exemption. A NO_X continuous emission monitoring system (CEMS) is required to be installed and operated on the Hydrogen Reformer Heater, and an H_2S CEMS is required to be installed and operated on Sulfur Recovery Unit exhaust. The VOC emission standards for the Tank Farm Thermal Oxidizer and Wastewater Treatment Plant Thermal Oxidizer are design/operational standards, expressed as a minimum temperature, and a continuous temperature monitoring device is required for each.

For the remaining four pollutant-specific emission units, the provisions of the CAM rule apply. The rule allows for two general approaches: continuous monitoring to determine compliance directly, such as using CEMS, or monitoring of control device operation within specified ranges of performance to provide reasonable assurance of compliance. The latter approach will be used for each of the four affected pollutant-specific emission units at the proposed refinery. The applicable CAM rule provisions are incorporated into Sections XXI, XXIII, and XXVII of the proposed permit.

draft

V. CONTROL TECHNOLOGY ANALYSES

A. General

1. Best Available Control Technology

As noted in Section IV.A.3 herein, PSD regulations under Title I of the Federal Clean Air Act and A.A.C. R18-2-406.A are applicable to the proposed refinery. One of the substantive requirements under the PSD regulations is that, for a new major stationary source, the Best Available Control Technology, or "BACT," must be applied to each emission unit. This requirement applies on a pollutant-specific basis. The proposed refinery is subject to the PSD provisions for nine pollutants: PM, PM_{10}, SO_2, NO_X, CO, VOC, hydrogen sulfide, total reduced sulfur, and reduced sulfur compounds.

The term "best available control technology" is defined at A.A.C. R18-2-101.19 as follows:

> "[A]n emission limitation, including a visible emissions standard, based on the maximum degree of reduction for each air pollutant listed in R18-2-101(97)(a) which would be emitted from any proposed major source or major modification, taking into account energy, environmental, and economic impact and other costs, determined by the Director in accordance with R18-2-406(A)(4) to be achievable for such source or modification."

The procedures for establishing BACT are set forth at A.A.C. R18-2-406.A.4 as follows:

> "BACT shall be determined on a case-by-case basis and may constitute application of production processes or available methods, systems, and techniques, including fuel cleaning or treatment, clean fuels, or innovative fuel combustion techniques, for control of such pollutant. In no event shall such application of BACT result in emissions of any pollutant, which would exceed the emissions allowed by any applicable new source performance standard or national emission standard for hazardous air pollutants under Articles 9 and 11 of this Chapter. If the Director determines that technological or economic limitations on the application of measurement methodology to a particular emissions unit would make the imposition of an emissions standard infeasible, a design, equipment, work practice, operational standard, or combination thereof may be prescribed instead to satisfy the requirement for the application of BACT. Such standard shall, to the degree possible, set forth the emissions reduction achievable by implementation of such design, equipment, work practice, or operation and shall provide for compliance by means which achieve equivalent

draft

results."

The U.S. EPA's interpretive policies relating to BACT analyses are set forth in several informal guidance documents. Most notable among these are the following:

- "Guidelines for Determining Best Available Control Technology (BACT)," December 1978.
- "Prevention of Significant Deterioration Workshop Manual," October 1980.
- "New Source Review Workshop Manual: Prevention of Significant Deterioration and Nonattainment Area Permitting." Draft. October 1990.

The Department generally uses what is termed a "top-down" procedure when making BACT determinations. This procedure is designed to ensure that each determination is made consistent with the two core criteria for BACT: consideration of the most stringent control technologies available, and a reasoned justification, considering energy, environmental and economic impacts and other costs, of any decision to require less than the maximum degree of reduction in emissions.

The framework for the top-down BACT analysis procedure used by the Department comprises five key steps, as discussed in detail below. The five-step procedure mirrors the analytical framework set forth in the draft 1990 guidance document. However, it should be noted that the Department does not necessarily adhere to the prescriptive process described in the draft 1990 guidance document. Strict adherence to the detailed top-down BACT analysis process described in that draft document would unnecessarily restrict the Department's judgment and discretion in weighing various factors before making case-by-case BACT determinations. Rather, as outlined in the 1978 and 1980 guidance documents, the Department has broad flexibility in applying its judgment and discretion in making these determinations.

<u>Step 1 - Identify all control options.</u> The process is performed on a source-by-source and pollutant-by-pollutant basis and begins with the identification of available control technologies and techniques. For BACT purposes, "available" control options are those technologies and techniques, or combinations of technologies and techniques, with a practical potential for application to the subject emission units and pollutants. These may include fuel cleaning or treatment, inherently lower-polluting processes, and end-of-pipe control devices. All identified control options are listed in this step. Those that are identified as being technically infeasible or as having unreasonable energy, economic or environmental impacts or other unacceptable costs are eliminated in subsequent steps.

draft

Step 2 - Eliminate technically infeasible control options. In this step, the technical feasibility of identified control options is evaluated with respect to source-specific factors. Technically feasible control options are those that have been demonstrated to function efficiently on identical or similar processes. In general, if a control option has been demonstrated to function efficiently on the same type of emission unit, or another unit with similar exhaust streams, the control option is presumed to be technically feasible. For presumably technically feasible control options, demonstrations of technical infeasibility must show, based on physical, chemical, and engineering principles, that technical difficulties would preclude the control option from being employed successfully on the subject emission unit. Technical feasibility need not be addressed for control options that are less effective than the control option proposed as BACT by the permit applicant.

Step 3 - Characterize control effectiveness of technically feasible control options. For each control option that is not eliminated in Step 2, the overall control effectiveness for the pollutant under review is characterized. The control option with the highest overall effectiveness is the "top" control option. If the top control option is proposed by the permit applicant as BACT, no evaluation is required under Step 4, and the procedure moves to Step 5. Otherwise, the top control option and other identified control options that are more effective than that proposed by the permit applicant must be evaluated in Step 4. A control option that can be designed and operated at two or more levels of control effectiveness may be presented and evaluated as two or more distinct control options (i.e., an option for each control effectiveness level).

Step 4 - Evaluate more effective control options. If any identified and technically feasible control options are more effective than that proposed by the permit applicant as BACT, rejection of those more effective control options must be justified based on the evaluation conducted in this step. For each control option that is more effective than the option ultimately selected as BACT, the rationale for rejection must be documented for the public record. Energy, environmental, and economic impacts and other costs of the more effective control options, including both beneficial and adverse (i.e., positive and negative) impacts, are listed and considered.

Step 5 - Establish BACT. Finally, the most effective control technology not rejected in Step 4 is proposed as BACT. To complete the BACT process, an enforceable emission limit representing BACT must be included in the PSD permit. This emission limit must be enforceable as a practical matter. In order for the emission limit to be enforceable as a practical matter, in the case of a numerical emission limitation, the permit must specify a reasonable compliance averaging time, consistent with established reference methods. The permit must also include compliance verification procedures (i.e., monitoring requirements) designed to show compliance or non-compliance

on a time period consistent with the applicable emission limit.

Materials considered by the applicant and by the Department in identifying and evaluating available control options include the following:

- Entries in the RACT/BACT/LAER Clearinghouse (RBLC) maintained by the U.S. EPA. This database is the most comprehensive and up-to-date listing of control technology determinations available.
- Information provided by pollution control equipment vendors.
- Information provided by industry representatives and by other State permitting authorities. This information is particularly valuable in clarifying or updating control technology information that has not yet been entered into the RACT/BACT/LAER Clearinghouse.

The BACT evaluations and proposed BACT determinations for each category of emission unit at the proposed refinery are discussed in the following subsections.

2. Maximum Achievable Control Technology

As noted in Section IV.C.4 herein, case-by-case MACT regulations under 40 CFR part 63, subpart B required by A.A.C. R18-2-302.D and incorporated by reference at A.A.C. R18-2-1101.B.2 are not applicable to any emission sources at the proposed refinery.

B. Boilers and Process Heaters

As noted in Sections II.A through II.AA herein, the proposed refinery will include two steam boilers fired with natural gas and eighteen process heaters fired with natural gas or RFG.

1. BACT for Particulate Matter

For this analysis, PM_{10} is defined to include both fine filterable particulate matter and condensible particulate matter as measured by EPA Reference Methods 201A and 202, respectively. Method 201A measures all particulate matter having an aerodynamic diameter equal to or less than nominally 10 micrometers (10^{-6} meters) that is collected on a glass fiber filter at the stack temperature. Method 201A will generally yield a slightly smaller result than Method 5 because particles having an aerodynamic diameter nominally 10 micrometers or greater are excluded. Method 202 measures all particulate matter that condenses at a temperature of approximately 20 degrees Celsius (ºC) after passing through a fabric filter such as that used in Method 201A. The total PM_{10}, which is the combined result of performing Method 201A and Method 202 simultaneously, may be substantially different than the PM

as measured by Method 5.

Steps 1-4

The only control strategy identified for the natural gas-fired steam boilers and RFG-fired process heaters is a work practice requirement: adherence to good combustion practices. This control strategy is technically feasible and will not cause any adverse energy, environmental, or economic impacts.

Step 5 - Establish BACT

In its initial permit application, the Permittee proposed 0.01 pound per million British Thermal Units (lb/MMBtu) heat input as the BACT emission limit for PM_{10}.

Based on further review of emission levels achieved by other gas-fired combustion sources, the Department determined that a PM_{10} emission limit of 0.0075 lb/MMBtu heat input, higher heating value (HHV), is representative of good combustion practices with gas-fired boilers and process heaters. The Permittee adjusted its BACT proposal to reflect this value as the proposed emission limit for PM_{10}.

The Department agrees that this proposal represents BACT for PM_{10}. The Department is aware that a small number of gas-fired combustion sources are subject to numerically lower PM_{10} emission limits. However, the Department has determined that these lower limits are not enforceable as a practical matter and is unaware of any data demonstrating that a more stringent limit is representative of BACT.

The Department elected not to establish a separate BACT emission limit for the filterable fraction of PM or PM_{10} emissions. Instead, the Department elected to establish a single BACT emission limit for total PM_{10}, including both filterable and condensible fractions. The emission limit established for each gas-fired boiler and process heater is 0.0075 lb/MMBtu heat input (HHV), based on a three-hour average. Compliance with this emission limit is to be demonstrated through annual performance testing using U.S. EPA Reference Methods 201 or 201A and Method 202.

2. BACT for Sulfur Dioxide

Steps 1-4

The only control option identified for the natural gas-fired steam boilers is the use of pipeline-quality natural gas. The only control option identified for the RFG-fired process heaters is the use of amine contactors to remove sulfur from RFG to the maximum extent possible. These control options are

technically feasible and will not cause any adverse energy, environmental, or economic impacts.

Step 5 - Establish BACT

In its initial permit application, the Permittee proposed a fuel gas sulfur content of 140 ppmv as the BACT emission limit for SO_2 from RFG-fired process heaters.

Based on further review of emission levels achieved by other RFG-fired combustion sources, the Department determined that an RFG sulfur content limit of 35 ppmv is representative of the achievable level with amine contactors. The Permittee adjusted its BACT proposal to reflect this value as the proposed emission limit representing BACT for SO_2 emissions.

The Department agrees that this proposal represents BACT for SO_2 emissions from RFG-fired process heaters. The Department is not aware of any RFG-fired combustion sources that are subject to more stringent SO_2 emission limits.

The emission limit established for each RFG-fired process heater is an RFG sulfur content limit of 35 ppmv, based on a daily average. Compliance with this emission limit is to be demonstrated either through continuous SO_2 emission monitoring, continuous monitoring of total RFG sulfur content, or continuous monitoring of RFG hydrogen sulfide content along with daily sampling and analysis to determine the RFG sulfur content based on the ratio of hydrogen sulfide to total sulfur.

In addition to the RFG sulfur content limit, the BACT analysis for SO_2 emissions from the process heaters also includes equipment design and work practice requirements in order to minimize, to the greatest extent possible, emissions that would occur due to upsets. Specifically, during periods of upset at the Amine Regeneration Unit, the amine contactors used to remove hydrogen sulfide from RFG streams will continue to generate rich amine solution and to deplete the refinery's supply of lean amine solution. The permit requires that rich amine solution storage capacity and a supply of lean amine solution, sufficient to support 24 hours of refinery operation, be maintained continuously. This will ensure that excess SO_2 emissions from the process heaters are minimized while the refinery curtails operations in the event of an upset at the Amine Regeneration Unit.

The Department concludes that monitoring and performance testing to demonstrate compliance with an SO_2 emission rate limitation for natural gas-fired combustion sources would be economically unwarranted. The Department has included in the proposed permit a prohibition on burning fuels other than natural gas in the steam boilers. This serves as operational

standard that satisfies the requirement for the application of BACT for SO_2 emissions.

3. BACT for Nitrogen Oxides

Step 1 - Identify All Control Options

Identified control technologies and techniques for NO_X emissions include combustion modifications (low-NO_X burners and flue gas recirculation) and post-combustion control devices [selective catalytic reduction (SCR), selective non-catalytic reduction (SNCR), and $SCONO_X$].

Combustion modifications can be applied in combination with one another and in combination with a post-combustion control device. Thus, a variety of control options with identified control technologies applied individually and in combination can be considered.

Step 2 - Eliminate Technically Infeasible Control Options

The Department concluded that flue gas recirculation and $SCONO_X$ have not been demonstrated to be technically feasible for all or some of the combustion sources. Specifically, flue gas recirculation was determined by the Department not to be demonstrated for the RFG-fired process heaters at the proposed refinery. (However, this control technique is demonstrated and feasible and has been proposed by the Permittee as BACT for the natural gas-fired boilers.) Flue gas recirculation has not been demonstrated to function efficiently on process heaters that are subject to highly variable loads and that burn fuels with variable heat value. Thus, there are significant technical differences between the proposed refinery's process heaters and those combustion sources where flue gas recirculation has been demonstrated in practice. These significant technical differences preclude a determination that flue gas recirculation has been demonstrated to function efficiently on sources that are identical or similar to the proposed refinery's process heaters.

$SCONO_X$ was determined by the Department not to be demonstrated either for the RFG-fired process heaters or for the natural gas-fired boilers. This technology has not been demonstrated to function efficiently on combustion sources burning fuels other than natural gas or on combustion sources as large as the boilers. Thus, there are significant technical differences between the proposed refinery's combustion sources and those few sources where $SCONO_X$ has been demonstrated in practice. These significant technical differences preclude a determination that $SCONO_X$ has been demonstrated to function efficiently on sources that are identical or similar to the proposed refinery's boilers and process heaters.

Step 3 - Characterize Control Effectiveness of Technically Feasible Control Options

The second-ranked control option for each combustion source involves the use of technically feasible combustion modifications (i.e., low-NO_X burners with flue gas recirculation for the natural gas-fired boilers and low-NO_X burners for the process heaters). The NO_X emission level achievable with this control option varies somewhat for individual combustion sources, but is generally between 0.015 lb/MMBtu heat input (HHV) and 0.040 lb/MMBtu heat input (HHV), based on a three-hour average. This control option has been proposed by the Permittee for eleven RFG-fired process heaters and for the two natural gas-fired boilers.

The highest-ranked control strategy for each combustion source involves the use of SCR in addition to the identified combustion modifications. Again, the NO_X emission level achievable with this control option varies somewhat for individual combustion sources, but is generally between 0.0075 lb/MMBtu heat input (HHV) and 0.012 lb/MMBtu heat input (HHV), based on a three-hour average. This control option has been proposed by the Permittee for seven RFG-fired process heaters.

The combination of SCR with state-of-the-art combustion modifications for controlling NO_X emissions is a control strategy that, in some applications, can perform at two or more levels of control effectiveness. Specifically, for some of the process heaters, by increasing the permissible ammonia slip level and increasing the catalyst replacement frequency, the effectiveness of the SCR system in maintaining a high degree of NO_X emission reduction may be increased. For these process heaters, the Department has evaluated the high-efficiency and the moderate-efficiency SCR systems as two distinct control options.

Other technically feasible control strategies were not given in-depth consideration by the Department. These control strategies are SCR or SNCR applied without combustion modifications (i.e., in conjunction with conventional burners) and SNCR applied in conjunction with combustion modifications. Based on the Department's engineering judgment, low-NO_X burners are preferable to conventional burners due to the magnitude of the emission reductions achievable at relatively little cost, and SCR is preferable to SNCR for the same reason.

Step 4 - Evaluate More Effective Control Options

In the case of each combustion source, the second-ranked control option (i.e., combustion controls) will not cause any adverse energy, environmental, or economic impacts. The highest-ranked control option (i.e., with the addition of selective catalytic reduction), when considered in comparison with the

second-ranked control option, will cause adverse energy and economic impacts and will yield both beneficial and adverse environmental impacts. The adverse energy impact is due to the electrical requirements of the SCR system operation and to the reduction in energy efficiency attributable to the pressure drop across the SCR catalyst grid. To the extent that the decreased energy efficiency results in an economic penalty, that cost is considered in the evaluation of adverse economic impacts, discussed below. With that exception, the adverse energy impacts are relatively minor and are not a significant factor in the BACT decision.

The adverse environmental impacts attributable to the addition of the SCR system include the use of ammonia reagent, with associated storage, shipping and handling risks; the handling and disposal of a spent catalyst as a solid waste stream; ammonia emissions; and, indirectly, formation of PM_{10} and visible plume from ammonia salt precipitates. The proposed refinery will use aqueous ammonia as the active reagent in its SCR systems, as opposed to the more hazardous anhydrous ammonia, so this is a relatively minor environmental impact and is not a significant factor in the BACT decision. Similarly, extensive industry experience with SCR systems indicates that the removal and disposal of spent SCR catalyst can be conducted safely, with insignificant risk to the environment. To the extent that the safe removal and disposal of spent catalyst results in an economic penalty, that cost is considered in the evaluation of adverse economic impacts, discussed below. Otherwise, the environmental impacts of spent catalyst removal and disposal are not a significant factor in the BACT decision.

Ammonia "slip," or ammonia that is injected in the SCR system and exits the unit without participating in the chemical reduction of NO_X emissions, leads directly to emissions of ammonia and indirectly to the formation of visible plumes, secondary particulate matter, and visibility impairment. These problems are less severe when the SCR catalyst is new and activity is highest, because the ammonia injection rate can be set to near-stoichiometric levels. As the catalyst ages, its activity decreases, and a higher ammonia reagent injection rate is required to maintain the rate of the NO_X reduction reaction necessary for continuous compliance with NO_X emission limits. This tends to result in increasing levels of ammonia slip.

The more stringent the NO_X emission limits, and the less frequent the catalyst replacement, the greater are the adverse environmental impacts from ammonia slip. With typical average NO_X concentrations less than 20 parts per million volume, dry basis (ppmvd), at the inlet to the SCR systems, as would be the case for the process heaters at the proposed refinery, the SCR systems can be designed and operated to achieve NO_X concentrations below 8 ppmvd, corrected to zero percent stack gas oxygen concentration, based on

a three-hour average, on a consistent and reliable basis.[2] For the purposes of this BACT analysis, this concentration equates to a NO_X emission limit of 0.0085 lb/MMBtu heat input (HHV). Achieving this very low NO_X concentration requires injection of larger amounts of ammonia reagent and, consequently, higher permissible ammonia slip levels. For the purposes of evaluating the environmental impacts of the high-efficiency SCR system in this BACT analysis, the Department has concluded that an allowable ammonia slip level of 15 ppmvd, corrected to zero percent stack gas oxygen concentration and based on a three-hour average, is representative of the level achievable with this system.

For the purposes of this BACT analysis, the NO_X emission limit achievable with the moderate-efficiency SCR system is 0.0125 lb/MMBtu heat input (HHV). This relatively small increase in the NO_X emission limit, as compared to the high-efficiency SCR system, allows for significant decreases in ammonia injection rate and ammonia slip level. For the purposes of evaluating the environmental impacts of the moderate-efficiency SCR system in this BACT analysis, the Department has concluded that an allowable ammonia slip level of 5 ppmvd, corrected to zero percent stack gas oxygen concentration and based on a three-hour average, is representative of the level achievable with this system.

Ammonia slip, as mentioned previously, leads directly to emissions of ammonia and indirectly to the formation of visible plumes, secondary particulate matter, and visibility impairment. The adverse environmental impacts associated with these effects, as they would result from application of SCR systems to the RFG-fired process heaters at the proposed refinery, are potentially severe. These adverse environmental impacts are particularly severe for the high-efficiency SCR system when considered in conjunction with its beneficial environmental impacts, and even more so when these impacts are compared with those of the moderate-efficiency SCR system. The moderate-efficiency system is characterized by a NO_X emission limit of 0.0125 lb/MMBtu heat input (HHV) and an ammonia slip level of 5 ppmvd (both on a three-hour average). The high-efficiency system is characterized

[2] The actual and design control efficiencies of the high-efficiency SCR system discussed here are considerably higher than the 60 percent that is implied by an inlet NO_X concentration of 20 ppmv and an outlet NO_X concentration of 8 ppmv. The inlet NO_X concentration of 20 ppmv represents an uncorrected, long-term average and equates to a long-term average of approximately 0.025 lb/MMBtu heat input (HHV). This long-term average emission rate is typical of a heater with combustion controls designed to achieve a NO_X emission level of 0.040 lb/MMBtu heat input (HHV), based on a three-hour average, on a consistent and reliable basis. The apparent inconsistency in these values is attributable to the short-term variability in emission rate, which is more pronounced for RFG-fired process heaters because they are subject to variable loads and are fired with fuel of variable composition.

by a NO_X emission limit of 0.0085 lb/MMBtu heat input (HHV) and an ammonia slip level of 15 ppmvd (both on a three-hour average). In terms of mass emission rate, the ammonia emissions from the moderate-efficiency and high-efficiency SCR systems are approximately 0.0019 lb/MMBtu heat input (HHV) and 0.0058 lb/MMBtu heat input (HHV), respectively.

A representative RFG-fired process heater with a heat input capacity of 300 MMBtu/hr will be used to illustrate the environmental impacts of the identified NO_X control options and their impacts on NO_X and ammonia emissions. The incremental environmental impacts of the moderate-efficiency SCR system as compared to the no-SCR option include a reduction in NO_X emissions of 69 percent, or 8.2 lb/hr, and an increase in ammonia emissions of 0.6 lb/hr. The incremental environmental impacts of the high-efficiency SCR system as compared to the moderate-efficiency SCR system include a reduction in NO_X emissions of 32 percent, or 1.2 lb/hr, and an increase in ammonia emissions of 1.2 lb/hr. This information is summarized in the following table:

	NO_X Emission Rate (lb/hr)	Decrease (lb/hr)	Ammonia Emission Rate (lb/hr)	Increase (lb/hr)
No SCR	12.0	n/a	0.0	n/a
Moderate-Efficiency SCR	3.8	8.2	0.6	0.6
High-Efficiency SCR	2.6	1.2	1.7	1.2

Based on this information, the Department concludes that the beneficial environmental impacts of the moderate-efficiency SCR system clearly outweigh its adverse environmental impacts. The Department cannot conclude that the beneficial environmental impacts of the high-efficiency SCR system outweigh its adverse environmental impacts. Thus, the high-efficiency SCR system was not given further consideration as a NO_X control option for RFG-fired process heaters at the proposed refinery.

For the natural gas-fired steam boilers, the high-efficiency SCR system was the only SCR system considered. This was done because the boilers are not subject to variable loads and variable fuel composition as are the RFG-process heaters. Therefore, the ammonia slip impacts would not be expected to be significant.

draft

The final consideration in the evaluation of alternative NO_X control options is the adverse environmental impact associated with the application of SCR for the natural gas-fired boilers and for those RFG-fired process heaters where the Permittee has proposed the use of combustion controls as BACT. The Department's evaluation of these adverse economic impacts is based, in part, on cost information provided by the Permittee in Table 6.2-4 of its revised permit application. The Department also conducted an independent evaluation of the economic impacts of SCR systems for the natural gas-fired steam boilers and for the RFG-fired process heaters using the cost information developed by the U.S. EPA for its January 2001 presumptive BACT guidance for NO_X emissions from new refinery process heaters.[3] The Department's evaluation shows that the incremental cost effectiveness of adding SCR systems to those combustion sources where the Permittee has proposed the use of combustion controls as BACT ranges from $15,000 to $38,000 per ton of NO_X emission reduction ($15,000 to $28,000 per ton at the RFG-fired process heaters and $38,000 per ton at the natural gas-fired steam boilers). The Department considers these to be significant, adverse economic impacts.[4]

Considering these adverse economic impacts as well as the adverse environmental impacts and the relatively insignificant air quality benefits that would result, the Department concludes that requiring SCR for those combustion sources where the Permittee has proposed the use of combustion controls as BACT cannot be justified. Therefore, the Department concurs with the Permittee's proposed selection of a control option representing BACT for NO_X emissions from each natural gas-fired steam boiler and each RFG-fired process heater.

---

[3] See January 19, 2001 memorandum from J.S. Seitz, Director, Office of Air Quality Planning and Standards, U.S. EPA, to Air Division Directors, U.S. EPA Regions I-X. "BACT and LAER for emissions of NO_X and VOC at Tier 2/Gasoline Sulfur Refinery Projects."

[4] The average cost effectiveness of the most effective control option ranges from approximately $2,000 to $10,000 per ton at the RFG-fired process heaters and $800 per ton at the natural gas-fired steam boilers. The average cost effectiveness value for the boilers is based on an uncontrolled (baseline) emission factor of 0.28 lb/MMBtu heat input (HHV), from AP-42 Section 1.4 The average cost effectiveness values for the process heaters are based on an uncontrolled (baseline) emission factor of 0.217 lb/MMBtu heat input (HHV), from U.S. EPA guidance regarding BACT for refinery process heaters. (See, January 19, 2001 memorandum from J.S. Seitz, Director, Office of Air Quality Planning and Standards, U.S. EPA, to Air Division Directors, U.S. EPA Regions I-X. "BACT and LAER for emissions of NO_X and VOC at Tier 2/Gasoline Sulfur Refinery Projects.") Selection of these baseline emission rates is inherently arbitrary; thus, the Department gave little consideration to average cost effectiveness when making its preliminary BACT determinations for NO_X emissions from boilers and process heaters.

draft

Step 5 - Establish BACT

In its initial permit application, the Permittee proposed BACT emission limits for NO_X, individually for each boiler and process heater, based on the use of combustion modifications. These emission limits ranged from 0.05 lb/MMBtu heat input to 0.09 lb/MMBtu heat input. Using the emission limits initially proposed as BACT, total allowable NO_X emissions from the natural gas-fired steam boilers and the RFG-fired process heaters at the proposed refinery would have been in excess of 1,250 tons per year.

Based on further review of emission levels achieved by other RFG-fired and natural gas-fired combustion sources, the Department determined that lower emission limits are achievable with combustion modifications. The Department further determined that SCR may be reasonable for some combustion sources at the proposed refinery. In addition, between the time that the initial permit application was submitted and the time that the Department made its preliminary BACT determinations, there were considerable advances in the state of the art in NO_X emission controls for natural gas-fired steam boilers and RFG-fired process heaters. The Permittee adjusted its proposed NO_X control options and its proposed NO_X BACT emission limits to reflect these developments.

As discussed in Steps 2-4 above, the NO_X control option proposed by the Permittee for the natural gas-fired steam boilers is the use of low-NO_X burners and flue gas recirculation. The Permittee has proposed a NO_X emission limit of either 0.012 or 0.013 lb/MMBtu heat input,[5] based on a three-hour average, representing the maximum degree of emission reduction achievable with the proposed control option. The Department agrees that this proposal generally represents BACT for NO_X emissions from the natural gas-fired boilers and has included in the draft permit a NO_X emission limit of 0.0125 lb/MMBtu heat input (HHV), based on a three-hour average. This is equivalent to a stack gas NO_X concentration of 10 ppmvd, corrected to three percent stack gas oxygen concentration, consistent with the basis for the Permittee's proposed emission limits.

The NO_X control option proposed by the Permittee for seven of the RFG-fired process heaters is the use of low-NO_X burners and SCR. The seven heaters that are proposed to be equipped with SCR are as follows:

Name	ID Number
Atmospheric Crude Charge Heater	B-01300

[5] Due to rounding errors, different values are used in different sections of the permit application.

Name	ID Number
Catalytic Reforming Unit Charge Heater	B-05110
Catalytic Reforming Unit Interheater No. 1	B-05120
Catalytic Reforming Unit Interheater No. 2	B-05130
Hydrogen Reformer Heater	B-07010
Butane Conversion Unit Dehydrogenation Reactor Charge Heater	B-15310
Butane Conversion Unit Dehydrogenation Reactor Interheater	B-15320

For each of these heaters, the Permittee has proposed a NO_X emission limit of either 0.012 or 0.013 lb/MMBtu heat input,[6] based on a three-hour average. As discussed in Step 4 above, the Department considers this to be representative of the NO_X emission level achievable with a moderate-efficiency SCR system on RFG-fired process heaters. The Department agrees that the Permittee's proposal generally represents BACT for NO_X emissions from these process heaters and has included in the draft permit a NO_X emission limit of 0.0125 lb/MMBtu heat input (HHV), based on a three-hour average. This is equivalent to a stack gas NO_X concentration of 10 ppmvd, corrected to three percent stack gas oxygen concentration, consistent with the basis for the Permittee's proposed emission limits.

The NO_X control option proposed by the Permittee for each of the remaining eleven RFG-fired process heaters is the use of low-NO_X burners. This technology achieves reduced NO_X formation rates, relative to conventional burners, through proprietary design changes that are specific to the products offered by individual equipment. Generally, low-NO_X burners minimize formation of prompt NO_X by staging the introduction of air, providing control over the air-to-fuel ratio throughout the combustion zone, and allowing the fuel to burn under fuel-lean conditions. Formation of thermal NO_X is minimized by ensuring that the combustion region contains a high amount of combustion products and diluent air, with temperatures much lower than the adiabatic flame temperature, so that the peak flame temperature is maintained as low as possible. The NO_X emission reductions achievable with low-NO_X burner technology are generally less for RFG firing than for natural gas firing. The two primary reasons for this are the variable nature of RFG composition, which adversely affects the ability to maintain

[6] Due to rounding errors, different values are used in different sections of the permit application.

extremely fuel-lean conditions throughout the combustion zone while still maintaining flammability, and the high adiabatic flame temperature of RFG relative to natural gas.

For the eleven RFG-fired process heaters that are proposed to be equipped with low-NO_X burners, the Permittee has proposed NO_X emission limits, individually, ranging from 0.025 to 0.035 lb/MMBtu heat input (HHV), based on a three-hour average. The achievable NO_X level (i.e., the proposed NO_X emission limit) for each heater is determined independently and is dictated by the configuration of the particular heater. The required turndown ratio and heat release, firebox dimensions, and burner placement for a particular heater, to the extent that they affect burner design elements such as air-to-fuel ratio and flame length, all constrain the optimization of burner design and performance. The eleven heaters in this category, and the Permittee's proposed NO_X emission limit for each heater, are as follows:

Name	ID Number	NO_X Emission Limit (lb/MMBtu heat input) (HHV)
Vacuum Crude Charge Heater	B-02100	0.034
Hydrocracker Unit Charge Heater	B-10200	0.034
Hydrocracker Main Fractionator Heater	B-10500	0.025
Naphtha Hydrotreater Charge Heater	B-04200	0.030
Catalytic Reforming Unit Debutanizer Reboiler	B-05609	0.030
Distillate Hydrotreater Charge Heater	B-08200	0.033
Distillate Hydrotreater Splitter Reboiler	B-08509	0.032
Butane Conversion Unit Isostripper Reboiler	B-15110	0.030
Delayed Coking Unit Charge Heater No. 1	B-14110A	0.030
Delayed Coking Unit Charge Heater No. 2	B-14110B	0.030

draft

Name	ID Number	NO_X Emission Limit (lb/MMBtu heat input) (HHV)
Spray Dryer Heater	B-26903	0.030

The Department concludes that the Permittee's proposed NO_X emission limits represent BACT for these eleven RFG-fired process heaters, based on a three-hour average. The Department has included in the draft permit the NO_X emission limits listed above. Compliance with each NO_X emission limit is to be demonstrated through the use of NO_X continuous emission monitoring systems.

With the emission limits proposed as BACT by the Department, the total allowable NO_X emissions from the natural gas-fired steam boilers and the RFG-fired process heaters at the proposed refinery will be approximately 350 tons per year. This represents a 72 percent decrease relative to the levels initially proposed by the Permittee.

4. BACT for Carbon Monoxide

Steps 1-4

The only control strategy identified for the RFG-fired process heaters and the natural gas-fired steam boilers is adherence to good combustion practices. This control strategy is technically feasible and will not cause any adverse energy, environmental, or economic impacts.

Step 5 - Establish BACT

The Permittee has proposed BACT emission limits for the RFG-fired process heaters and the natural gas-fired steam boilers of 0.040 lb/MMBtu and 0.016 lb/MMBtu, respectively, each based on a rolling three-hour average. The Department agrees that this proposal represents BACT for CO.

The Department is aware that RFG-fired process heaters adhering to good combustion practices can achieve lower CO emission levels if state-of-the-art combustion controls are not used to minimize NO_X emissions. However, because formation rates of CO and NO_X in a heater or furnace are inversely related, the Department must weigh the relative effect of increased CO and NO_X emissions when making its determination of BACT for CO emissions from the RFG-fired process heaters. Based on this consideration, the Department has concluded that the applicant's proposal represents BACT. The Department is not aware of any similar emission units that achieve more

stringent CO emission limits while achieving comparable NO_X emission limits.

Compliance with each CO emission limit is to be demonstrated through the use of a CO continuous emission monitoring system.

5. BACT for Volatile Organic Compounds

Steps 1-4

The only control strategy identified for the RFG-fired process heaters and the natural gas-fired steam boilers is adherence to good combustion practices. This control strategy is technically feasible and will not cause any adverse energy, environmental, or economic impacts.

Step 5 - Establish BACT

The Department concludes that monitoring and performance testing to demonstrate compliance with a VOC emission rate limitation for gas-fired combustion sources would be economically unwarranted. The Department further concludes that the emission limitations representing BACT for CO emissions (0.04 lb/MMBtu for the RFG-fired process heaters and 0.016 lb/MMBtu from the natural gas-fired steam boilers, each based on a rolling three-hour average) serve as operational standards that satisfy the requirement for the application of BACT for VOC emissions. Therefore, no separate VOC emission standard for combustion sources has been imposed in the proposed permit.

C. Sulfur Recovery Units

In addition to the two Sulfur Recovery Units, the Sulfur Recovery Plant includes two Sulfur Pits, a Sulfur Rail Car Loading Rack, and a Sulfur Truck Loading Rack. These emission units are addressed separately.

As discussed in detail in Section II.N.1 herein, the purpose of the Sulfur Recovery Plant is to provide for safe disposal of the acid gas product streams from the Sour Water Stripper and the Amine Regeneration Unit. The configuration proposed by the applicant comprises two parallel Claus sulfur recovery units (SRU's), a tail gas treatment unit (TGTU), and a tail gas thermal oxidizer. This is the configuration used by most petroleum refineries. The capacity of the proposed Sulfur Recovery Plant is 608 long tons per day of liquid elemental sulfur product.

Each proposed Claus SRU will employ a three-stage reactor train to convert feed sulfur, in the form of hydrogen sulfide, into elemental sulfur. The first reactor stage is thermal and non-catalytic; the second and third reactor stages are catalytic. The primary chemical reactions are as follows:

$$H_2S + 1\frac{1}{2}\ O_2 \rightarrow SO_2 + H_2O$$

$$2\ H_2S + SO_2 \rightarrow 3\ S + 2\ H_2O$$

The system is operated substoichiometrically with air, such that only one third of the H_2S is oxidized to SO_2. This oxidation reaction occurs primarily in the first reactor. The second reaction begins in the first reactor and continues in the two catalytic reactors. Each of the three reactor stages is followed by a condenser that cools, condenses, and removes the elemental sulfur. At normal operating temperatures and pressures, and assuming acid gas H_2S concentration of approximately 75 percent, the Claus process is thermodynamically limited to a sulfur recovery efficiency of approximately 97 to 98 percent. The achievable efficiency decreases with lower acid gas H_2S concentration.

In addition to the two primary chemical reactions described above, secondary reactions also occur due to impurities in the system. Most importantly, hydrocarbons in the acid gas streams entering the thermal reactor are partially oxidized to form carbon dioxide and water, and carbon dioxide and unreacted hydrocarbons react with sulfur to form carbonyl sulfide (COS) and carbon disulfide (CS_2). These carbon-sulfur compounds may be partially hydrolyzed in the first catalytic reactor to form H_2S, but largely flow unreacted through the SRU.

The tail gas exiting the third condenser of the Claus SRU flows to the TGTU. The tail gas is first combined with natural gas before entering the catalytic hydrogenation reactor, where residual SO_2 is hydrogenated to form H_2S according to the following equation:

$$3\ H_2 + SO_2 \rightarrow H_2S + 2\ H_2O$$

In addition, a portion of the residual COS and CS_2 from the Claus SRU is hydrolyzed to form H_2S according to the following equations:

$$2\ H_2O + CS_2 \rightarrow 2\ H_2S + CO_2$$

$$H_2O + COS \rightarrow H_2S + CO_2$$

Finally, the gas exiting the TGTU hydrogenation reactor is routed to a series of amine absorber columns where an aqueous solution of methyl diethanolamine (MDEA) is used to scrub H_2S from the TGTU tail gas. The H_2S is stripped from the rich MDEA solution and routed back to the front end of the Claus SRU. The overhead stream from the final amine absorber column is routed to a thermal oxidizer for destruction of residual H_2S, COS, and CS_2.

The overall sulfur recovery efficiency achievable with the equipment Sulfur Recovery Plant configuration proposed by the applicant is approximately 99.97 percent.

draft

1. BACT for Sulfur Dioxide

Step 1 - Identify All Control Options

Although sulfur may be sold as a byproduct, the entire Sulfur Recovery Plant exists primarily for the purpose of reducing air pollution. Therefore, for the purposes of this BACT analysis, all of the identified control technologies are considered air pollution control devices; none of the identified control technologies are considered alternative production processes.

The simplest SO_2 control strategy would involve simply eliminating the sulfur recovery plant, and allowing the acid gases from the amine regeneration unit and the sour water stripper to be emitted to the atmosphere.

An alternative control strategy allowing elimination of the SRU's and the TGTU would involve using a combustion device to burn the acid gases, thereby generating SO_2, in conjunction with a wet scrubber.

Four other control options are the equipment configuration proposed by the applicant and three slight variations on that configuration: The Claus SRU's could be installed and operated without the TGTU or the thermal oxidizer; with the TGTU, but without the thermal oxidizer; or with the thermal oxidizer and without the TGTU.

In any of the configurations described above (i.e., SRU technology with or without TGTU and thermal oxidizer), the proposed two Claus units could be replaced with a different number of Claus units, such as one large unit or three smaller units. Also, regardless of the number of Claus units used, any of the three-stage Claus units could be replaced with two-stage Claus units. Finally, the one large TGTU could be replaced with two or more TGTU's.

Other alternatives include a number of proprietary adaptations of the Claus SRU technology. These proprietary adaptations generally operate by extending the Claus reaction to improve the thermodynamically achievable sulfur conversion efficiency. The first of the proprietary adaptations identified by the Department is the Superclaus® process. The Superclaus® process is a conventional Claus process, with a proprietary catalyst replacing the conventional, activated alumina Claus catalyst in the final catalytic reactor stage. The proprietary catalyst in the Superclaus® process selectively oxidizes H_2S to form elemental sulfur and water according to the following equation:

$$H_2S + \frac{1}{2} O_2 \rightarrow S + H_2O$$

The Superclaus® process reportedly increases the thermodynamically achievable sulfur recovery efficiency to approximately 99 percent, as

compared to an achievable efficiency less than 98 percent with the conventional Claus process.

The Euroclaus® process is an enhancement of the Superclaus® process, with a hydrogenation reactor inserted upstream of the final catalytic reactor stage. This hydrogenation reactor reduces the SO_2 concentration in the final reactor stage, which reportedly increases the thermodynamically achievable sulfur recovery efficiency to approximately 99.5 percent.

The Mobil Oil Direct Oxidation Process, like the Euroclaus® process, involves a hydrogenation reactor and a catalytic direct oxidation reactor added to the back end of a Claus SRU. This process reportedly increases the thermodynamically achievable sulfur recovery efficiency to approximately 99 percent.

Several proprietary adaptations of the Claus process use oxygen enrichment in order to improve the temperature control in the first-stage thermal reactor. These processes include the COPE™, OxyClaus®, and SURE® processes. These processes reportedly have thermodynamically achievable sulfur recovery efficiencies of approximately 98 percent.

The Selectox process is similar to the conventional Claus process, with a catalytic oxidizer in place of the first-stage thermal reactor. This process reportedly has a thermodynamically achievable sulfur recovery efficiency of approximately 98 percent.

The Sulfreen® process utilizes a conventional Claus process, with an additional Claus-type reactor after the final sulfur condenser. This additional reactor operates at a temperature below the sulfur dew point and adsorbs the sulfur on the Claus catalyst. Each of the two beds in the additional reactor is cycled between adsorption and regeneration; during the regeneration cycle, the hot gases are produced in an integral heater and, after desorbing the sulfur from the catalyst, are passed through an integral condenser. Operation of the additional reactor at a sub-dew point temperature reportedly improves the thermodynamically achievable sulfur recovery efficiency to approximately 99 percent. Variations on the Sulfreen® process include HydroSulfreen®, which includes a hydrogenation/hydrolysis reactor upstream of the Sulfreen® reactor, and DoxoSulfreen®, which includes all components of the HydroSulfreen® process, plus a direct oxidation reactor downstream of the Sulfreen® reactor. HydroSulfreen® and DoxoSulfreen® reportedly improve the achievable sulfur recovery efficiency to approximately 99.7 percent and 99.9 percent, respectively.

The Maxisulf, CBA, Clinsulf®, and MCRC™ processes are similar to the Sulfreen® process, but without the integral heater and the recycle function in the sub-dew point part of the process. Instead, the regeneration gas is drawn

from the final sulfur condenser in the Claus process. Thermodynamically achievable sulfur recovery efficiencies are similar to those for the Sulfreen® process.

The Wellman-Lord, CANSOLV®, and CLINTOX processes are essentially wet scrubbers in which proprietary solvents are used for SO_2 removal. Any of these technologies would require an upstream combustion device in order to convert reduced sulfur compounds to SO_2. Any could be used with or without SRU's upstream of the combustion device. When used in conjunction with an upstream Claus SRU, these technologies allow the SO_2 to be stripped from the solvent and returned to the front end of the SRU. When installed in conjunction with an upstream Claus SRU, each of these technologies reportedly is capable of achieving a sulfur recovery efficiency in excess of 99.9 percent.

Stretford, Z-SORB, LO-CAT®, and CrystaSulf® are proprietary liquid-phase oxidation-reduction technologies providing indirect oxidation of H_2S to form elemental sulfur and water according to the equation presented above (in the description of the Superclaus® process). The Stretford process uses a vanadium-based chelating agent, the Z-SORB process uses a zinc-based chelating agent, and the LO-CAT® and CrystaSulf® technologies use proprietary, iron-based chelating agents. When installed in conjunction with an upstream Claus SRU and hydrogenation/hydrolysis reactor, each of these technologies reportedly is capable of achieving a sulfur recovery efficiency in excess of 99.9 percent.

The Shell Claus Offgas Treating ("SCOT") process is the most commonly used process for removal of sulfur from Claus SRU vent streams and is the basis for the TGTU at the proposed ACF refinery. As described above, the applicant has proposed to use an MDEA-based solvent in the TGTU amine absorber columns. Variations on this control technology would involve the use of proprietary solvents, such as Sulften®, Flexsorb® SE, or Flexsorb® SE Plus, in place of the MDEA solvent. The SCOT process can be applied in TGTU service with or without a downstream thermal oxidizer.

Step 2 - Eliminate Technically Infeasible Control Options

Several of the identified, proprietary technologies are considered technically infeasible because, based on information available to the Department, they have not been demonstrated to function efficiently in removing sulfur from acid gas streams from petroleum refinery sour water strippers and amine regeneration units. These include CANSOLV®, CLINTOX, CrystaSulf®, and LO-CAT®.

Any control strategy involving the use of a combustion device to burn the acid gases to generate SO_2, regardless of the efficiency of the wet scrubber

used to control these SO_2 emissions, is a technically infeasible control option because it would not meet the NSPS requirements at 40 CFR 60 subpart J.

Using a conventional Claus SRU without a TGTU or wet scrubber, either with or without a thermal oxidizer, also is a technically infeasible control option because it would not meet the NSPS requirements at 40 CFR 60 subpart J. The same is true of this configuration if the Claus SRU is replaced with any of the Claus adaptations that use oxygen enrichment (i.e., COPE™, OxyClaus®, and SURE®) or the Superclaus®, Mobil Oil Direct Oxidation, Selectox, Sulfreen®, Maxisulf, CBA, Clinsulf®, or MCRC™ processes.

Step 3 - Characterize Control Effectiveness of Technically Feasible Control Options

The equipment configuration proposed by the applicant is the third-ranked SO_2 control option. This control option comprises two, three-stage Claus SRU's followed by a TGTU and a thermal oxidizer. This control option will achieve an overall sulfur recovery efficiency of approximately 99.97 percent and a maximum SO_2 emission rate of 33.6 lb/hr.

The second-ranked SO_2 control option comprises any number of SRU's in parallel, followed by any number of TGTU's in parallel. Like the configuration proposed by the applicant, this control option also would achieve an overall sulfur recovery efficiency of approximately 99.97 percent. The maximum SO_2 emission rate would be considerably less than 33.6 lb/hr, because most of the unrecovered sulfur would be emitted as reduced sulfur compounds.

The top-ranked SO_2 control option is a configuration with no SRU and no combustion device, simply allowing all acid gases to be emitted to the atmosphere. The sulfur recovery efficiency of this control option is zero, and essentially zero SO_2 emissions would occur.

The Department has identified several alternative control strategies that are similar to that proposed by the applicant and that may be able to achieve similar control efficiencies. These include the following:

- One, three-stage Claus SRU followed by any number of parallel TGTU's and a downstream thermal oxidizer.
- Three, three-stage Claus SRU's followed by any number of parallel TGTU's and a downstream thermal oxidizer.
- Either of the two control options listed above, or the control option proposed by the applicant, with the Claus SRU or SRU's replaced by any of the following 15 alternative SRU technologies: Superclaus®, Euroclaus®, COPE™, OxyClaus®, SURE®, Stretford, Mobil Oil Direct Oxidation, Selectox, Sulfreen®, HydroSulfreen®,

DoxoSulfreen®, Maxisulf, CBA, Clinsulf®, or MCRC™ technology. With 3 alternative configurations and 15 alternative technologies, this yields a total of 45 process modification control options.

- Any of the 45 control options identified above, with the MDEA-based SCOT TGTU replaced by a Wellman-Lord scrubber or by a SCOT-type TGTU using Sulften®, Flexsorb® SE, or Flexsorb® SE Plus amine solution. With 45 identified process modification control options and 4 identified add-on control options, this yields a total of 180 alternative control strategies.

The Department recognizes that the 15 identified, technically feasible, alternative SRU technologies and the 4 identified, technically feasible, alternative TGTU technologies have nominal control efficiencies that are similar to the nominal efficiencies achievable with the SRU and TGTU technologies proposed by the applicant. However, the Department is not aware of any installation where any of the above-listed 180 alternative control strategies has been demonstrated to be capable of achieving a control effectiveness higher than the 99.97 percent sulfur recovery efficiency or an emission limit more stringent than the 33.6 lb/hr proposed by the applicant. Based on its review of the available literature, the alternative SRU technologies are designed to provide either more economical operation (e.g., a proprietary Claus adaptation using oxygen enrichment or a SCOT-type TGTU using a proprietary amine solution) or to allow regulatory requirements to be met without the use of TGTU technology (e.g., Euroclaus®), not to allow improvement upon the overall performance achievable with the equipment configuration proposed by the applicant.

The Department also notes that equipment reliability is of paramount importance in identifying the most effective SO_2 control option for the Sulfur Recovery Plant at the proposed ACF refinery. Hypothetically, even if one of the identified, alternative technologies were capable of improving the sulfur recovery efficiency to 99.98 percent, this would result in an SO_2 emission reduction of less than 50 tons per year. (The Department emphasizes that this value is purely for illustration; there is absolutely no available information to indicate that such higher control efficiency is, in fact achievable.) When operating at its nominal maximum short-term feed rate capacity of approximately 800 long tons per day, the plant is processing nearly 75,000 pounds of sulfur per hour. At this rate, if the Sulfur Recovery Plant were to experience a total of only 40 minutes of unanticipated shutdown time per year, the emissions from acid gas flaring during the shutdown time would more than offset the improved sulfur recovery efficiency. This represents an equipment availability threshold of more than 99.992 percent, which is extremely high for any industrial equipment. For this reason, the Department agrees in principle with the applicant's proposed use of the most widely used and demonstrated sulfur recovery plant equipment configuration in the petroleum refining industry.

Step 4 - Evaluate More Effective Control Options

The top-ranked and second-ranked control options are not representative of BACT due to the adverse environmental impacts that would result. Each of these control options would allow sulfur to be emitted to the atmosphere at a rate at least as high as the control option proposed by the applicant and in a form that is more toxic than SO_2.

Step 5 - Establish BACT

The baseline value for the sulfur recovery unit SO_2 BACT analysis is the NSPS emission limit of 250 ppmv, dry basis, corrected to zero percent oxygen, based on a 12-hour average. This emission limit equates to approximately 99.8 percent sulfur recovery efficiency. In its initial permit application, the Permittee proposed a 99.8 percent sulfur recovery efficiency requirement as its BACT emission limit.

Based on further review of emission levels achieved by other state-of-the-art sulfur recovery plants, the Department determined that more stringent emission limits, reflecting sulfur recovery efficiencies as high as 99.97 percent at design sulfur production capacity, are achievable. The Permittee adjusted its BACT proposal to reflect this higher degree of emission reduction. The proposed SO_2 BACT emission limit is 33.6 lb/hr, based on a one-hour average, using two parallel, three-stage Claus sulfur recovery units with a TGTU and a thermal oxidizer. The Department is not aware of any sulfur recovery plant that is subject to more stringent emission limits for SO_2 and other sulfur compounds.

The BACT analysis for this equipment also addresses SO_2 emissions that would occur from the TGTU thermal oxidizer or the emergency flares during an upset at the Sulfur Recovery Plant. (The feed materials for the sulfur recovery plant, comprising sour gas from the Amine Regeneration Unit and offgas from the Sour Water Stripper, are rich in hydrogen sulfide. The toxicity of hydrogen sulfide is such that these gas streams must be combusted rather than released directly to the atmosphere.) In order to minimize these emissions to the greatest extent possible, the proposed permit includes design and work practice requirements for the Amine Regeneration Unit and the Sour Water Stripper. Specifically, in the event of an upset that results in flaring of acid gases or excess SO_2 emissions from the sulfur recovery plant, the Permittee is required to re-route the Amine Regeneration Unit and Sour Water Stripper feed materials (i.e., rich amine solution and sour water) within 15 minutes; to curtail operations at upstream process units where rich amine solution and sour water are generated; and to maintain storage capacity for rich amine solution and sour water sufficient to support 24 hours of refinery operation.

draft

2. BACT for Reduced Sulfur Compounds

This BACT analysis covers three separate PSD-regulated pollutants that are practically equivalent for petroleum refinery sulfur recovery plants. These are hydrogen sulfide; reduced sulfur compounds, which comprises hydrogen sulfide, carbonyl sulfide, and carbon disulfide; and total reduced sulfur, which comprises hydrogen sulfide, methyl mercaptan, dimethyl sulfide, and dimethyl disulfide.

Step 1 - Identify All Control Options

The identified control options and control strategies for emissions of reduced sulfur compounds are the same as those identified for SO_2 emissions.

Step 2 - Eliminate Technically Infeasible Control Options

The technically feasible and infeasible control options and control strategies for emissions of reduced sulfur compounds are the same as those identified for SO_2 emissions.

Step 3 - Characterize Control Effectiveness of Technically Feasible Control Options

The equipment configuration proposed by the applicant is the top-ranked control option for emissions of reduced sulfur compounds. This control option comprises two, three-stage Claus SRU's followed by a TGTU and a thermal oxidizer. This control option will achieve an overall sulfur recovery efficiency of approximately 99.97 percent and a maximum H_2S emission rate of 0.089 lb/hr.

As in the SO_2 BACT analysis, the Department has identified several alternative control options that are similar to that proposed by the applicant and that may be able to achieve similar control efficiencies and H_2S emission rates. However, the Department is not aware of any installation where any of the alternative control options has been demonstrated to be capable of achieving a control effectiveness higher than the 99.97 percent sulfur recovery efficiency or an emission limit more stringent than the 0.089 lb/hr proposed by the applicant.

Step 4 - Evaluate More Effective Control Options

The equipment configuration proposed by the applicant is the top-ranked control option for emissions of reduced sulfur compounds; there are no more effective control options.

Step 5 - Establish BACT

draft

In its initial permit application, the Permittee did not propose a BACT emission limit for reduced sulfur compounds.

Based on further review of emission levels achieved by other state-of-the-art sulfur recovery plants, the Department determined that imposition of such an emission limit is appropriate. The Permittee proposed a BACT emission limit of 0.089 lb/hr, as hydrogen sulfide, based on a rolling three-hour average. The Department is not aware of any sulfur recovery plant that is subject to a more stringent emission limit for reduced sulfur compounds.

3. BACT for Nitrogen Oxides

Step 1 - Identify All Control Options

Identified control technologies and techniques for NO_X emissions include combustion modifications (low-NO_X burners and flue gas recirculation) and post-combustion control devices [selective catalytic reduction (SCR), selective non-catalytic reduction (SNCR), and $SCONO_X$].

Step 2 - Eliminate Technically Infeasible Control Options

The Department concluded that the use of low-NO_X burners is the only technically feasible control option for the TGTU thermal oxidizer. Other combustion modifications, such as flue gas recirculation, which are designed to achieve NO_X emissions decreases by reducing flame temperature, are not compatible with the primary function of the thermal oxidizer (i.e., destruction of reduced sulfur compounds). Based on information available to the Department, none of the identified add-on control technologies has been demonstrated to be technically feasible for thermal oxidizers, and there are significant technical differences between the proposed thermal oxidizer and the combustion sources where each of these technologies has been demonstrated in practice.

Step 3 - Characterize Control Effectiveness of Technically Feasible Control Options

The NO_X emission level demonstrated to be achievable with low-NO_X burners on TGTU thermal oxidizers is 0.06 lb/MMBtu heat input (HHV), based on a one-hour average. This control option has been proposed by the Permittee for the TGTU thermal oxidizer at the proposed refinery.

Step 4 - Evaluate More Effective Control Options

No technically feasible control options more effective than the option proposed by the applicant were identified by the Department.

draft

Step 5 - Establish BACT

In its second revised permit application, the Permittee proposed a NO_X emission limit of 14.0 lb/hr for the TGTU thermal oxidizer, based on an emission factor of 0.14 lb/MMBtu heat input. Using the emission limit proposed by the applicant, total allowable NO_X emissions from the thermal oxidizer would have been in excess of 61 tons per year.

Based on further review of emission levels achieved by other petroleum refinery TGTU thermal oxidizers, the Department determined that lower emission limits are achievable with low-NO_X burners. The Permittee adjusted its proposed NO_X control option and its proposed NO_X BACT emission limit to reflect these lower emission limits.

As discussed in Step 3 above, the NO_X control option proposed by the Permittee for the TGTU thermal oxidizer is the use of low-NO_X burners to achieve a NO_X emission limit of 0.06 lb/MMBtu heat input, based on a one-hour average. The Department agrees that this proposal represents BACT for NO_X emissions from the TGTU thermal oxidizer and has included in the proposed permit a NO_X emission limit of 0.06 lb/MMBtu heat input (HHV), based on a one-hour average.

With the emission limit proposed as BACT by the Department, the total allowable NO_X emissions from the TGTU thermal oxidizer will be approximately 26 tons per year. This represents a 57 percent decrease relative to the emission rate proposed by the Permittee.

D. BACT for Sulfur Pits

The Sulfur Recovery Plant will include two storage vessels for molten sulfur produced by the Sulfur Recovery Units. These vessels, called "sulfur pits," are potential sources of reduced sulfur compound emissions.

Steps 1-4

Control options for the Sulfur Pits are routing the sweep gas to a thermal oxidizer or to the front end of the Sulfur Recovery Units for recovery of the sulfur contained in the gas. Each of these options is technically feasible. Both options would achieve nearly 100 percent control of emissions of hydrogen sulfide and other reduced sulfur compounds. However, the first option would result in significant, adverse environmental impacts because essentially all of the sulfur contained in the sweep gas would be oxidized to sulfur dioxide. No adverse environmental impacts are associated with the second control option.

Step 5 - Establish BACT

In its initial permit application, the Permittee proposed to route the sweep gas from the Sulfur Pits to the Sulfur Recovery Plant Thermal Oxidizer. Based on further review of control techniques used by other state-of-the-art sulfur recovery plants, the Department determined that routing the sweep gas to the Sulfur Recovery Units for recovery of the sulfur is an environmentally preferable alternative. As a result, the Permittee revised its permit application to reflect this control strategy. The Department is not aware of any sulfur recovery plant that is subject to more stringent requirements for emissions of reduced sulfur compounds from sulfur pits, and concurs that this control strategy represents BACT. No emission limit is needed, because the sweep gas is considered a raw material that is fed to the Sulfur Recovery Units.

E. BACT for Sulfur Loading

The Sulfur Recovery Plant will include truck and rail car loading racks for molten sulfur produced by the Sulfur Recovery Units. These loading racks are potential sources of reduced sulfur compound emissions.

Steps 1-4

Control options for the sulfur loading racks include degassing the sulfur prior to loading and routing the displaced gases to a thermal oxidizer. Each of these options is technically feasible. The first option is considered a pollution prevention activity because the hydrogen sulfide removed from the molten sulfur is routed to the front end of the Sulfur Recovery Units for recovery as a salable product. This option has no adverse environmental impacts. The second option would result in significant, adverse environmental impacts because nearly all of the sulfur in the gases displaced during loading would be oxidized to sulfur dioxide.

Step 5 - Establish BACT

BACT for the sulfur loading racks is a requirement that the sulfur be degassed to a maximum hydrogen sulfide concentration of 15 parts per million by weight prior to loading.

F. BACT for Storage Tanks

As noted in Sections II.Q through II.U herein, the proposed refinery will include 62 large cylindrical tanks and six pressure spheres used to store feed stocks, process intermediates, and final products. Emissions from storage tanks, primarily VOC, occur as a result of displacement of headspace vapor during filling operations in the case of fixed roof or internal floating roof tanks, or from tank rim seals in the case of external floating roof tanks (i.e., working losses). To a lesser degree, diurnal temperature variations and solar heating cycles also result in VOC emissions from storage tanks (i.e., storage or "breathing" losses). With proposed BACT controls, estimated emissions associated with the storage tanks account for approximately 12

percent of the facility-wide annual VOC emissions. Of this amount, about two-thirds is released from internal floating roof storage tanks containing gasoline products or naphtha intermediate (Group "B" Storage Tanks) for which the proposed BACT is collection of vapors in a closed vent system and control by a thermal oxidizer.

1. Volatile Organic Compounds

Step 1 - Identify All Control Options

Available VOC control options for petroleum liquid storage tanks include inherently less-polluting processes, control equipment designed to minimize vapor leakage from the tanks, end-of-pipe air pollution control equipment, and combinations thereof. The nominal requirements relating to control of VOC emissions from storage tanks are outlined in the petroleum refinery NESHAP regulation, 40 CFR 63 subpart CC, and the Hazardous Organic NESHAP (HON), 40 CFR 63 subpart G. The following control options are available for petroleum liquid storage tanks:

- Operating the vessel under pressure, such that it operates with no emissions;
- Routing vapors to a process or a fuel gas system via hard piping, such that the vessel operates with no emissions;
- External floating roof;
- Fixed roof with vapor collection by a closed vent system routed to a control device (e.g., thermal oxidizer, carbon adsorber);
- Fixed roof in combination with an internal floating roof; and
- Fixed roof in combination with an internal floating roof and with vapor collection in a closed vent system routed to a control device (e.g., thermal oxidizer, carbon adsorber).

Step 2 - Eliminate Technically Infeasible Control Options

The two most effective control options, operating the tank with no emissions either by operating under pressure or by routing all sweep gases to a process or a fuel gas system, are feasible only for tanks storing certain petroleum liquids. Either of the two most effective control options would be considered an inherently less-polluting process configuration. The first is suitable only for materials, such as propane and butane, that are gases at atmospheric pressure. This control option is proposed by the Permittee for the six "Group 'D'" storage tanks. The second is feasible only for tanks storing petroleum liquids that are compatible with the process or fuel gas system into which the gases would be routed. This control option is proposed by the Permittee for the eight "Group 'A'" storage tanks, with gases routed to a compressor in the RFG system. For all remaining tanks, these control options are not considered technically feasible.

draft

All other identified control options are technically feasible for all storage tanks.

Step 3 - Characterize Control Effectiveness of Technically Feasible Control Options

Storage tank control options, in order of decreasing overall control effectiveness, are presented below:

Process configurations with no emissions - As noted in the discussion of technical feasibility in Step 2, the Permittee has proposed for the Group "A" and Group "D" storage tanks process configurations that will result in the tanks operating effectively with no VOC emissions.

Fixed roof in combination with internal floating roof and with vapor collection in a closed vent system routed to a control device - This design incorporates a roof structure that floats on the surface of the stored liquid, with dual flexible seals along the edge of the roof. This design effectively eliminates working losses. As further control, the headspace between the floating roof and the top of the tank is filled with an inert "sweep" gas (e.g., nitrogen) which is vented under slight vacuum. The breathing losses that escape through tank penetrations and seals are carried with the sweep gas to an add-on control device such as a thermal oxidizer or a regenerative adsorption system. The Permittee has proposed this control option both for the 27 Group "B" storage tanks and for the Sour Water Tank. The Permittee has proposed to use a thermal oxidizer as the control device for the Group "B" storage tanks and a carbon adsorption system as the control device for the Sour Water Tank.

Internal floating roof and dual rim seals - This design is the same basic configuration as the previous option, but does not include a sweep gas routed to a control device. The Permittee has not proposed this control option for any storage tanks at the proposed refinery.

External floating roof with dual rim seals - This design is similar to the internal floating roof configuration described above, but without the enclosed headspace. The floating roof and seals act to reduce volatilization losses. This control option has overall effectiveness approximately equivalent to that of the internal floating roof control option described immediately above. The external floating roof design is commonly accepted control technology for vessels storing liquids with relatively low volatility and is proposed by the Permittee as BACT for the 20 Group "C" storage tanks.

Fixed roof with vapor collection by a closed vent system routed to a control device - This design omits any control equipment (e.g., floating roof) designed to minimize generation of VOC-laden vapors, instead relying only

on an end-of-pipe air pollution control device. This configuration is not proposed by the Permittee for any storage tanks.

Step 4 - Evaluate More Effective Control Options

For the Group "A," Group "B," and Group "D" Storage Tanks and for the Sour Water Tank, the control option proposed as BACT by the Permittee is the top control option and no detailed evaluation of other control options is necessary.

For the Group "C" Storage Tanks, the only more effective technically feasible control option is the configuration proposed for the Group "B" Storage Tanks. For these tanks, the Department concludes that the configuration proposed by the Permittee represents BACT because the beneficial environmental impacts associated with the more stringent control option (i.e., improved VOC control effectiveness) are outweighed by the adverse environmental and economic impacts that would result. The rationale for this conclusion is presented in the following paragraphs.

The Permittee proposed that the Group "C" Storage Tanks, used to store lower volatility liquids such as crude and distillate oils, have an external floating roof design meeting NESHAP requirements. The Permittee also proposed that the Sour Water Tank have an internal floating roof design meeting NESHAP requirements. Each of these tank configurations allows some VOC emissions, primarily due to breathing losses that escape through tank penetrations and seals. These VOC emissions could be controlled by capturing the gases and routing them to an add-on control device such as a thermal oxidizer. (In the case of the Group "C" Storage Tanks, this also would require converting the tank from an external floating roof configuration to an internal floating roof configuration.) This more stringent control option was evaluated by the Permittee, in its permit application, and by the Department. The evaluation included identification and comparison of the economic, environmental, and energy impacts of the proposed control option and the more stringent control option.

Thermal oxidation was used to represent the add-on control device in this analysis. This control technology can be used for control of any VOC-containing stream. For storage tank exhaust streams, due to the low VOC concentration of these streams, thermal oxidizers are preferred to vapor recovery systems using condensation or carbon adsorption. In addition, because the VOC emissions in these exhaust streams are mixtures of several materials, the economic benefit provided by recovery systems in some applications is negated in this instance. Thus, for the purposes of this evaluation, the adverse economic impacts associated with a thermal oxidizer will be smaller than those associated with a recovery-based control device, and the Department concludes that thermal oxidation technology should be

used to represent the add-on control device in the more stringent control option.

Energy Impacts. A thermal oxidizer would require fuel to maintain the temperature necessary for combustion, and the unit would require some electrical input for functions such as air movement. However, these are insignificant adverse impacts and were not a substantial factor in the decision.

Environmental Impacts. Assuming 95 percent control efficiency, the more stringent control option would reduce VOC emissions by about 500 pounds per year from the Sour Water Tank and 80 tons per year from all Group "C" Storage Tanks collectively. These are beneficial environmental impacts.

While VOC emissions are destroyed in this process, emissions of other pollutants are created due to combustion. Emissions of NO_X and CO would each be approximately one-eighth of the quantity of VOC emissions controlled. Thus, if all of the Group "C" Storage Tanks were converted to use the more stringent control option, approximately 10 tons of NO_X and 10 tons of CO per year would result. These are substantial, adverse environmental impacts.

Economic Impacts. As documented in Table 6.4-2 of the permit application, the Permittee provided cost information for configuring the Group "C" Storage Tanks as internal floating roof tanks with headspace vapors routed to a thermal oxidizer. This cost information included adding a cone-type roof to each tank, ductwork from each tank to the thermal oxidizer, and increasing the size of the Tank Farm Thermal Oxidizer (in relation to the equipment needed only to serve the Group "B" Storage Tanks). The Permittee's cost estimate, presented as an incremental evaluation of applying the Group "B" configuration to both the Group "B" and Group "C" Storage Tanks, indicates an incremental cost effectiveness of $14,050 per ton. The Permittee did not present cost information specific to the Sour Water Tank.

In performing its evaluation of the economic impacts of the alternative control options, the Department relied on the cost information provided by the Permittee, but made several adjustments to the values provided. First, the Department calculated the amortized capital costs using an equipment life of 15 years and a real interest rate of 7 percent. Second, the Department used only the cost information for the Group "C" Storage Tanks, and did not consider the costs associated with controlling VOC emissions from the Group "B" Storage Tanks. Third, the Department used the Group "C" Storage Tank cost information, less the cost of adding a fixed roof, to estimate the costs of the more effective control option as applied to the Sour Water Tank. The Department's revised cost information yields an estimated cost effectiveness of approximately $17,000 per ton of VOC emission

reduction.

Step 5 - Establish BACT

A number of tank types will be represented at the proposed refinery because specific designs are suitable for specific service categories, as shown in the Outside Battery Limits (OSBL) Storage Tank Listing provided in Section 2 of the permit application. The following sections summarize the selected BACT tank designs and emission control systems for each tank category:

Group "A" Storage Tanks:

Eight storage tanks at the proposed refinery will be of the pressurized dome roof configuration and will have a nitrogen gas blanket in contact with the liquid. The pressurized dome roof tanks are used to store products that may suffer reductions in quality if exposed to the oxygen present in ambient air. The nitrogen blanket does not create a continuous exhaust flow from the tank. Make-up nitrogen is bled into the dome headspace to balance losses, or to equalize pressure when the tank is drained. During normal tank operation, the vapor space of the tank (containing nitrogen and VOC) is discharged only during tank filling, and small breathing losses may occur during daily temperature swings.

In its initial permit application, the Permittee proposed as BACT for the Group "A" Storage Tanks a closed-vent system routed to the tank farm thermal oxidizer for 95 percent efficient destruction. The maximum VOC emission rate under this proposed control strategy was 145.6 tons per year. Based on its review of available control strategies, the Department determined that more stringent controls were feasible. The Permittee revised its permit application to reflect the control strategy currently proposed as BACT for the Group "A" Storage Tanks. The Department is not aware of any more stringent available control option. Therefore, it concurs with the Permittee's proposed BACT control strategy.

The displaced VOC emissions from the pressurized dome roof tanks are captured and routed to a compression system. This unit compresses the storage tank vapors and inserts them into the RFG system for use in numerous refinery combustion sources. This capture/control technique has a control efficiency of essentially 100 percent.

Group "B" Storage Tanks:

Twenty-seven storage tanks will have an internal floating roof design, and will have the headspace above the floating roof vented to a thermal oxidizer with a minimum of 99 percent VOC destruction efficiency (as proposed by the applicant).

In its initial permit application, the Permittee proposed as BACT for the Group "B" Storage Tanks the use of internal floating roofs exclusively. The maximum VOC emission rate under this proposed control strategy was 83.6 tons per year. Based on its review of available control strategies, the Department determined that more stringent controls were feasible. The Permittee revised its permit application to reflect the control strategy currently proposed as BACT for the Group "B" Storage Tanks. The Department is not aware of any more stringent available control option. Thus, it concurs with the Permittee's proposed BACT control strategy. This control strategy will result in maximum VOC emissions of approximately 3.6 tons per year, a reduction of more than 95 percent relative to the originally proposed BACT control strategy.

The VOC BACT conditions in the proposed permit include minimum design standards for the internal floating roof tanks, based on those found in 40 CFR 63 subpart G (HON for storage vessels), and for the thermal oxidizer. The primary design requirement is a design VOC destruction efficiency of 99.9 percent. Other emission limitations for the thermal oxidizer are expressed as operational requirements (minimum temperature and maximum exhaust gas flow rate). This approach is consistent with BACT precedent and allows for streamlined monitoring (i.e., CAM is not applicable because continuous monitoring consistent with the units of the standard is specified). Refer to Section IV.F herein for a complete discussion of CAM applicability. The Tank Farm Thermal Oxidizer combustion chamber must be maintained at a temperature of least 1600 EF and the exhaust gas volumetric flow rate must be maintained below the rate that corresponds to a minimum residence time of 0.75 seconds. Continuous monitoring of thermal oxidizer combustion chamber temperature and exhaust gas volumetric flow rate are required, as well as annual inspections of the thermal oxidizer burner and monitoring systems.

Sour Water Tank:

The Sour Water Tank will have an internal floating roof design. This tank will be equipped with suitable double seals at the perimeter and other roof penetrations meeting design specifications under 40 CFR 60 subpart Kb. In addition, the headspace from the tank will be routed to a carbon adsorption system comprising dual carbon canisters. For this service category, this combination of design specifications and operating requirements was deemed representative of BACT.

Group "C" Storage Tanks:

Twenty storage tanks will have an external floating roof design. Each of these tanks will be equipped with suitable double seals at the perimeter and other roof penetrations meeting NESHAP (40 CFR 63 Subpart G) design

specifications. For this service category, new source NESHAP external floating roof storage vessel design and operation specifications were deemed representative of BACT.

Sour Water Tank:

The Sour Water Tank will have an internal floating roof design. This tank will be equipped with suitable double seals at the perimeter and other roof penetrations meeting design specifications under 40 CFR 60 subpart Kb. For this service category, subpart Kb internal floating roof storage vessel design and operation specifications were deemed representative of BACT.

Group "D" Storage Tanks:

Six pressure vessels with zero emissions to the atmosphere are proposed to store high vapor pressure material such as LPG, natural gasoline, butane, etc. As pressure vessels designed to operate in excess of 204.9 kPa and without emissions to the atmosphere, these tanks are exempt from regulation under the petroleum refinery NESHAP pursuant to 40 CFR 63.641. Pressure vessels designed for zero emissions inherently constitute BACT for VOC emissions.

Group "E" Storage Tanks:

A single storage tank (T-42801) comprises the Group "E" Storage Tank category. This tank is proposed to store asphalt at the refinery and is identified in Section XX.A of the draft permit. It is subject to the requirements of 40 CFR 60 subpart UU. The vapor pressure of asphalt is below the thresholds for control requirements under 40 CFR 60 subpart Kb and 40 CFR 63 subpart CC. Therefore, no substantive NSPS or NESHAP requirements for VOC emissions apply to the tank. Due to the extremely low vapor pressure of asphalt, even at elevated storage temperatures, and the regulatory precedent, the proposed permit contains no additional tank design or control system requirements for VOC emissions from this tank.

Tank Degassing and Cleaning:

Elevated VOC emissions can occur during routine storage tank degassing and cleaning operations. South Coast Air Quality Management District (SCAQMD) Rule 1149 contains provisions for storage tank cleaning and degassing that are representative of BACT measures for Group "A", "B", and "C" storage tanks. Under the proposed BACT provisions, emissions from tanks opened to the atmosphere for cleaning or degassing must be controlled by using one of the following:

- Liquid balancing;

- Negative pressure displacement and subsequent incineration in an approved manner;
- Refrigerated condenser which reduces the vapor temperature to 100E F or lower; or
- Other approved control method or control equipment at least 90 percent efficient in controlling VOC emissions.

2. BACT for Particulate Matter

For most of the proposed refinery storage tanks, PM emissions are either zero or negligible, and BACT requirements beyond those specified for VOC are not warranted. Only the Group "E" Storage Tank, Asphalt Storage Tank T-42801, is a potential source of PM emissions and was included in the BACT analysis.

Steps 1 - 4

Pursuant to 40 CFR 60 subpart UU, § 60.472(c), Asphalt Storage Tank T-42801 is required to be operated with no visible emissions to the atmosphere, except for one consecutive 15-minute period in any 24-hour period when the transfer lines are being blown for cleaning. No specific control technologies are prescribed.

A review of BACT guidance and precedent for asphalt storage tanks revealed limited data. A single guideline was identified. The Bay Area Air Quality Management District (BAAQMD) maintains a BACT guideline for asphalt storage tanks that specifies that exhaust gases be cooled to less than 120 EF and vented through a fiberglass or steel wool filter.[7]

Step 5 - Establish BACT

The BAAQMD BACT guideline provisions identified above, along with the NSPS requirement for zero opacity emissions, were selected as BACT for PM emissions from the asphalt storage tank and were incorporated into the draft permit.

G. BACT for Loading Racks

The proposed refinery will include loading racks for transferring gasoline and distillate products to rail cars and trucks. These are sources of VOC emissions.

Step 1 - Identify All Control Options

[7]See BAAQMD BACT Guideline Document No. 12.1, 11/8/91.

Identified control technologies for VOC emissions from loading racks include carbon adsorption, condensation, and incineration.

Step 2 - Eliminate Technically Infeasible Control Options

Each of the identified control technologies is technically feasible for application to the loading racks.

Step 3 - Characterize Control Effectiveness of Technically Feasible Control Options

Applied individually, the identified technologies have approximately equivalent control effectiveness capabilities. Each technology, when applied to the exhaust streams from the loading racks, is capable of achieving VOC control efficiencies in excess of 98 percent. The most effective control strategy involves the use of vapor recovery followed by incineration.

Step 4 - Evaluate More Effective Control Options

The Permittee has proposed as BACT for the gasoline product loading racks a vapor recovery system using carbon adsorption (i.e., a regenerative adsorption system) followed by a thermal oxidizer. This is the top control option for the gasoline product loading racks. Thus, no evaluation of alternative control options is necessary.

For the distillate product loading racks, the Permittee has proposed to use a thermal oxidizer. The use of a vapor recovery system followed by incineration is an available, technically feasible, and more effective VOC control option for the distillate product loading racks. The Department concludes that the configuration proposed by the Permittee represents BACT because the beneficial environmental impacts associated with the more stringent control option (i.e., improved VOC control effectiveness) are outweighed by the adverse economic impacts that would result. The rationale for this conclusion is presented in the following paragraphs.

The more stringent control option was evaluated by the Permittee, in its permit application, and by the Department. The evaluation included identification and comparison of the economic, environmental, and energy impacts of the proposed control option and the more stringent control option. Regenerative adsorption systems were used to represent the vapor recovery system technology in this analysis. It was assumed that two separate units, one for jet fuel and one for Diesel fuel, would be required.

Energy Impacts. In the more effective control option, the vapor recovery system would require steam for adsorbent regeneration and electrical input for functions such as air movement. These are insignificant adverse impacts. Used downstream of a vapor recovery system, the thermal oxidizer would be smaller and would use less fuel, which is an insignificant beneficial impact of the more effective control

option. These offsetting and insignificant energy impacts were not a factor in the decision.

Environmental Impacts. Assuming 98 percent control efficiency, the more stringent control option would reduce VOC emissions by about 9 tons per year. In addition, when used downstream of a vapor recovery system, the thermal oxidizer would be smaller and would use less fuel, thereby generating less NO_X and CO emissions. These are beneficial environmental impacts.

Economic Impacts. As documented in Table 6.7-2 of the permit application, the Permittee provided cost information for upgrading the distillate product loading racks to a control option utilizing vapor recovery systems followed by a thermal oxidizer. The Permittee's cost estimate, presented as an incremental evaluation of applying the thermal oxidizer in addition to the vapor recovery systems, indicates an incremental cost effectiveness of $21,336 per ton.

In performing its evaluation of economic impacts of the alternative control options, the Department relied on the cost information provided by the Permittee, but made several adjustments to the values provided. First, the Department calculated the amortized capital costs using an equipment life of 15 years and a real interest rate of 7 percent. Second, the Department compared the cost of the more effective control option to the proposed control option, and did not consider the costs of the vapor recovery systems applied alone. (Because that control option would provide control effectiveness less than the proposed control option at greater cost.) The Department's revised cost information yields an estimated incremental cost effectiveness of approximately $30,000 per ton of VOC emission reduction.

Step 5 - Establish BACT

In its initial permit application, the Permittee proposed a VOC BACT emission limit for gasoline and distillate product loading racks of 10 milligrams per liter loaded. The maximum VOC emission rate under the Permittee's proposed BACT was 507 tons per year.

Based on further review of emission levels achieved by other petroleum liquid loading operations, the Department determined that lower emission limits are achievable using a vapor recovery system in series with a thermal oxidizer to control VOC emissions from gasoline product loading racks, and using a thermal oxidizer to control VOC emissions from distillate product loading racks. The Permittee adjusted its BACT proposal to reflect these control strategies.

Based on the evaluations performed in Step 4, the Department made its BACT determinations for gasoline product loading racks and distillate product loading racks. The Department agrees that the Permittee's proposal represents BACT for VOC emissions from these sources. The Department is not aware of any gasoline loading racks or distillate loading racks are subject to more stringent VOC emission

limits. The maximum VOC emission rate under the proposed BACT is approximately 26 tons per year, a reduction of approximately 95 percent from the originally proposed BACT control strategy.

The primary emission limits established as BACT are the VOC emission limits from the rail car and truck loading rack thermal oxidizers. These limits are 1.25 pounds per million gallons of product loaded at the gasoline product loading racks, and 22.0 pounds per million gallons of product loaded at the distillate product loading racks. Each of these limits is based on a rolling three-hour average. Compliance with this emission limit is to be demonstrated through continuous monitoring of temperature pursuant to an approved CAM plan. In addition to the thermal oxidizer VOC emission limits, the permit includes numerous work practice and equipment design requirements representing BACT, such as vapor collection system pressure-vacuum vent design specifications; prohibition of loading non-vapor-tight cargo tanks; and acting to ensure that the vapor collection systems are fully functional for each cargo tank loading.

H. Wastewater Treatment Plant

The Wastewater Treatment Plant includes a spray dryer, a wastewater collection system comprising drain systems and sumps, and a wastewater treatment system comprising a group of tanks. The spray dryer will emit only particulate matter. The wastewater collection and treatment systems will emit primarily VOC.

1. BACT for Particulate Matter

For this analysis, PM_{10} is defined to include filterable particulate matter as measured by EPA Reference Method 5.

Steps 1-4

The control strategy proposed by the applicant is the use of a fabric filter baghouse. This control strategy is technically feasible and will not cause any adverse energy, environmental, or economic impacts. Other identified control technologies include electrostatic precipitators, wet scrubbers, and inertial separators.

Step 5 - Establish BACT

The proposed BACT emission limit is an exhaust gas concentration of 0.005 grains per dry standard cubic foot, based on a three-hour average, using a fabric filter baghouse. Compliance with this emission limit is to be demonstrated through initial and annual performance testing. The Department is not aware of any spray dryer that is subject to a more stringent PM emission limit.

2. BACT for Volatile Organic Compounds

Step 1 - Identify All Control Options

Identified control technologies for VOC emissions from wastewater collection and treatment include carbon adsorption, incineration, and condensation.

Step 2 - Eliminate Technically Infeasible Control Options

All of the identified control options are technically feasible for application to the wastewater collection and treatment systems.

Step 3 - Characterize Control Effectiveness of Technically Feasible Control Options

Carbon adsorption and incineration have approximately equivalent control effectiveness capabilities. Each technology, when applied to the exhaust streams from the wastewater collection and treatment systems, is capable of achieving VOC control efficiencies in excess of 98 percent. Condensation would be expected to have somewhat lower achievable control efficiencies when applied to the exhaust streams from the wastewater collection and treatment systems.

The Permittee has proposed as BACT for the wastewater treatment system (i.e., tanks) the use of closed-vent systems vented to a thermal oxidizer. The Permittee has proposed as BACT for the wastewater collection system (i.e., drain systems and sumps) the use of closed-vent systems vented to carbon canisters or a thermal oxidizer, depending on the location and design of the individual emission source.

Step 4 - Evaluate More Effective Control Options

Neither of the control technologies proposed by the applicant has significant, adverse energy, environmental, or economic impacts. Each technology has a slight adverse environmental impact, i.e., solid waste from a carbon adsorption system and collateral air pollutant impacts from an incinerator, but these impacts are not sufficient to warrant rejection as BACT.

Step 5 - Establish BACT

The Department is not aware of any petroleum refinery wastewater collection and treatment systems that are required to use emission controls that are more stringent than those proposed by the Permittee. The Department has determined that the control strategy proposed by the Permittee represents BACT for VOC emissions from these systems.

draft

The VOC BACT requirements for the wastewater collection and treatment systems are expressed as equipment design standards and operational requirements. This form of expression will ensure that the maximum achievable level of emission control is achieved under all operating conditions. Specifically, for carbon canisters used to control emissions from sumps, the draft permit requires the use of dual canisters in series, with requirements for monitoring to detect breakthrough and for replacement in the event of breakthrough. For the Wastewater Treatment Plant Thermal Oxidizer, the primary design requirement is a design VOC destruction efficiency of 99.9 percent. Other emission limitations for the thermal oxidizer are expressed as operational requirements (minimum temperature and maximum exhaust gas flow rate). This approach is consistent with BACT precedent and allows for streamlined monitoring (i.e., CAM is not applicable because continuous monitoring consistent with the units of the standard is specified). Refer to Section IV.F herein for a complete discussion of CAM applicability. The Wastewater Treatment Plant Thermal Oxidizer combustion chamber must be maintained at a temperature of least 1600 EF and the exhaust gas volumetric flow rate must be maintained below the rate that corresponds to a minimum residence time of 0.75 seconds. Continuous monitoring of thermal oxidizer combustion chamber temperature and exhaust gas volumetric flow rate are required, as well as annual inspections of the thermal oxidizer burner and monitoring systems.

I. Equipment Leaks

Section XXIV of Attachment "B" of the proposed permit contains requirements for equipment leaks. The proposed ACF refinery design includes piping for the purpose of distributing the liquid and gaseous materials among process units. This piping includes thousands of piping components such as valves, pumps, compressors, flanges, and screwed connectors. Minor emissions of hydrogen sulfide may also occur due to leaking components in H_2S service. Equipment component emissions are mostly related to "leakage" from rotary shaft seals, connection interfaces, valve stems, and similar points.

1. BACT for Volatile Organic Compounds

Step 1 - Identify All Control Options

BACT control strategies for VOC equipment leaks are generally based on comprehensive leak detection and repair (LDAR) programs. The baseline requirements for such programs are described under the new source provisions of the petroleum refinery NESHAP (40 CFR 63 subpart CC) and the HON for equipment leaks (40 CFR 63 subpart H). Alternate, and in some cases more stringent, requirements for new refinery installations are provided

in the "28 MID" program[8] implemented in Texas and in Regulation 8, Rule 18 implemented by the Bay Area Air Quality Management District in California.

Equipment Specifications - Commercially proven equipment components with inherent leak-less design and construction features are available for refinery applications. These components reduce or preclude VOC emissions, regardless of the quality or frequency of LDAR activities. Available control options identified in the 28 MID program involving equipment specification or design include the following:

Pumps:

- Use of canned, magnetic drive, or diaphragm pumps not having external seals; or
- Use of pumps designed with double mechanical seals and a barrier fluid. The barrier fluid is at a higher pressure than the process or the fluid seal pot should be routed to a control device.

Dual mechanical seal pumps - This style of pump offers low seal leakage provided they are chosen and maintained properly. The TNRCC estimates that such equipment provides 75 percent reduction in VOC compared to simple mechanical seals (TNRCC, Regulations Governing Equipment Leaks, 11/98).

Magnetic Drive Pumps - In a magnetic-drive centrifugal pump type, there is no direct coupling between the drive and the pump casing, and consequently no rotating shaft seal. The pump is driven by magnetic coupling of strong permanent magnets attached to the drive motor and similar permanent magnets incorporated into the impeller of the pump. The only connection is by way of the magnet flux passing through the magnetic permeable casing of the pump. Fluid being pumped is totally contained within the pump chamber, so that assumed control efficiency is 100 percent (TNRCC, Regulations Governing Equipment Leaks, 11/98).

Valves:

Selection of diaphragm valves or bellows valves with the bellows welded to both the bonnet and stem.

Flanges and other Connectors:

---

[8]See Texas Natural Resource Conservation Commission (TNRCC) Air Permit Technical Guidance for Chemical Sources: Equipment Leak Fugitives. October 2000.

draft

Installation of piping connections that are welded around the complete circumference such that the joint cannot be disassembled by unbolting or unscrewing the components.

Relief Valves:

Routing of relief valve vents to an operating control device or use of rupture disks with a pressure gauge between a valve and the disk to monitor disk integrity.

Compressors:

Use of compressors designed with enclosed distance pieces and venting of the crankcase to a control device.

The above mentioned equipment designs can result in VOC control efficiency for the particular components of 100 percent assuming the device is functioning as intended. Alternatively, process equipment with a rotating shaft incorporating a double mechanical seal system without barrier fluid affords a control efficiency of approximately 75 percent. For certain equipment categories, applicable requirements also specify leak prevention design features. For example, compressors are required to include a barrier fluid system, and sampling connecting systems are required to be equipped with a closed-purge system routing the fluids back to the process or to a control device.

LDAR Program - The primary control option that has been deemed BACT for equipment leaks in prior determinations is an LDAR program. Such programs are also stipulated as mandatory requirements for new major sources of HAPs under the petroleum refinery NESHAP (40 CFR Part 63, subpart CC), which requires that sources comply with the provisions of the HON for equipment leaks (40 CFR 63 subpart H). An acceptable LDAR program includes suitable definition of a "leaking" component threshold concentration, as measured at the potential leak interface. In the HON subpart H, process equipment potentially present at petroleum refineries are grouped into the following categories:

- Pumps in light liquid service;
- Compressors;
- Pressure relief devices in gas/vapor service;
- Sampling connection systems;
- Open-ended valves or lines;
- Valves in gas/vapor service and in light liquid service;
- Pumps, valves, connectors, and agitators in heavy liquid service;
- Instrumentation systems;
- Pressure relief devices in liquid service;

- Surge control vessels and bottoms receivers; and
- Closed-vent systems and control devices.

For BACT purposes, the LDAR program must encompass all components that contain or convey VOC-containing fluids, while only equipment contacting fluids that meet specific HAP concentration criteria are subject to the NESHAP regulations. For each component category, leak detection procedures and test frequencies are defined in regulations or permit precedents that include both visual and instrumental inspections. If leaks are apparent through visible, audible, or olfactory means, the equipment must be repaired. If certain threshold VOC concentrations at the possible leak interface are surpassed during instrumental inspections (by EPA Reference Method 21 in appendix A to 40 CFR part 60), the equipment is also considered to be leaking and must be repaired.

New sources located in non-attainment areas and subject to the Lowest Achievable Emission Rate (LAER) requirements have adopted leak detection concentrations that are lower than those specified in applicable NESHAP standards. Examples of such determinations in California and Texas are documented in Table 6.5-1 of the Arizona Clean Fuels permit application. Generally, operating cost factors favor a lower leak detection definition since the value of lost product or intermediates due to a leak exceeds the projected cost of LDAR for those components. At very low leak definition levels, however, diminishing returns apply as less VOC is leaking when concentration is low, and the cost per unit VOC abated escalates dramatically as a large portion of the refinery components (even if recently replaced) may be deemed to be leaking.

Widely accepted BACT leak definition thresholds documented in the Arizona Clean Fuels permit application include pump and compressor seals at 2,000 ppmv, and valves and connectors at 500 ppmv. However, recent permits have specified more stringent leak detection definitions in some cases. A leak definition of 500 ppmv has been applied to all components in some permits, including pumps and compressors. This threshold concentration (i.e., leak definition) coincides with that stipulated in the 28 MID program for VOC emission reduction from component leakage.

In its review of LDAR program elements in various permits and regulations applicable to petroleum refineries, the Department identified one regulation (Bay Area Air Quality Management District, Regulation 8, Rule 18) that specifies a 100 ppmv leak definition for valves and connectors in gas/vapor and light liquid service. The Department also identified this rule as including limits, for some types of components, on the refinery-wide percentage of components for which a delay in repair is allowed. In these respects, the Bay Area regulation is more stringent than other LDAR programs that do not include such provisions.

In the NESHAP program, each piece of equipment is monitored on a specified frequency (weekly, monthly, quarterly, and/or annually) and repaired within a specified timeframe after a leak is detected. Alternative standards provide the facility an incentive to demonstrate that the portion of "leaking" valves, pumps, etc. is not greater than a given percentage of the facility population.

Step 2 - Eliminate Technically Infeasible Control Options

Process equipment options that can essentially eliminate fugitive VOC emissions for all instances at the proposed refinery were deemed infeasible or cost prohibitive. However, equipment options such as seal-less magnetic drive pumps and bellows-seal valves are available and technically feasible for many of the duties involved in the refinery design. There are more complex options that were viewed as impractical and cost-prohibitive due the large quantity of pumps and compressors that would be involved. For example, the capture and routing of vapor emissions from all facility pumps and compressors to one or more control devices would be impractical. Such control would involve the addition of an enormous quantity of additional vapor piping and equipment, which would constitute numerous additional fugitive emission sources.

The welding of flange edges and the elimination of piping connections are not feasible in cases where bolted flange connections are necessary. These include instances where access is necessary for maintenance, to facilitate equipment disassembly for inspection and maintenance, or to accommodate normal thermal expansion. Also, bolted flanges are necessary when vibration isolators or stress relief devices are needed on a pipe run. Because of cost considerations, flanges are used only when required for such purposes.

Selection of seal-less pumps is technically feasible for a limited number of situations. However, magnetic drive pumps or other seal-less designs are not commercially available across all ranges of flow and pressures encountered. Primarily, this is because the power transferred from the drive to the pump impeller is limited by the permeability of the pump casing to magnetic fields and the strength of the magnetic field itself. Also, a large portion of the pumps in refineries are driven by high-pressure steam impellers, which limits the availability of the magnetic-drive or seal-less pump option.

Another design selection that would reduce fugitive component VOC emissions includes the use of bellows-seal valves. Bellows-seal valves that are weld-sealed at the top and bottom of the bellows have been stipulated in new source permits by the South Coast Air Quality Management District for new refinery piping components up to and including 8 inches in diameter.

draft

Because seal-less pumps and bellows-seal valves are commercially proven and available for a range of refinery applications, these equipment design options were considered in the BACT economic analysis.

Step 3 - Characterize Control Effectiveness of Technically Feasible Control Options

The technically feasible control strategies, in order of decreasing stringency, are as follows:

- Full implementation of seal-less pumps (e.g., diaphragm, canned, or magnetic drive centrifugal pumps) and seal-less/leakless valves (e.g., welded bonnet bellows and diaphragm valves); HON subpart H and 28 MID equipment design specifications and LDAR programs; and 500 ppmv leak definition for all components.
- HON subpart H and 28 MID equipment design specifications and LDAR programs; limits on percent leaking components; 100 ppmv leak definition for valves and connectors in gas/vapor and light liquid service; and 500 ppmv leak definition for all other components.
- HON subpart H equipment design specifications and LDAR programs; plus leak definitions as required by applicable regulations for all components.

Step 4 - Evaluate More Effective Control Options

Seal-less pumps and bellows seal valves are commercially available for many of the services encountered in the proposed refinery design. Cost effectiveness varies depending on the pump size and type of fluid service category. Tables 6.5-2 through 6.5-6 of the Arizona Clean Fuels permit application present control cost estimates and BACT cost effectiveness for multiple scenarios of seal-less pump and bellows seal valve implementations.

In the Permittee's BACT analysis, the number of pumps or valves in a given service category was estimated, along with an average pump volume capacity. On this basis, the cost per ton abated ratio was determined for the two equipment options to provide a comparative cost effectiveness for pumps and valves in a given service category. Because both magnetic-drive pumps and bellows-seal valves offer nearly 100 percent control efficiency, it was conservatively assumed that all of the VOC emissions attributed to the baseline pump and valve option would be abated.

Tables 6.5-2 and 6.5-3 in the permit application document that the implementation of magnetic drive pumps for any particular service category is not economically reasonable when compared to the beneficial environmental impacts that would result. The Permittee's analysis shows that the use of 242 magnetic-drive pumps (approximately three-fourths of the

refinery-wide pump count) would have an annualized cost of over $700,000 and would reduce VOC emissions by 5.1 tons per year compared to dual mechanical seal pumps. This yields an incremental cost effectiveness of approximately $140,000 per ton of VOC. The Department's revised economic impacts analysis, which uses less conservative emission estimation methodologies, indicates that refinery-wide VOC emissions from pumps in VOC service will be only 2.6 tons per year. Using the Department's emission estimates, the incremental cost effectiveness of requiring magnetic-drive pumps would be well in excess of $300,000 per ton of VOC emission reduction.

The results of the Permittee's economic impacts analysis for bellows-seal valves, provided in Tables 6.5-4 through 6.5-6 of the permit application, show that this measure also is economically unreasonable for abatement of VOC emissions. This analysis shows that the use of 15,938 bellows-seal valves (approximately half of the refinery-wide valve count) would have an annualized cost of over $11 million and would reduce emissions by 77.9 tons per year compared to conventional valves. This yields an incremental cost effectiveness of approximately $140,000 per ton. The Department's revised economic impacts analysis, which uses less conservative emission estimation methodologies, indicates that refinery-wide VOC emissions from valves in VOC service will be only 1.5 tons per year. Using the Department's emission estimates, the incremental cost effectiveness of requiring bellows-seal valves would be well in excess of $1 million per ton of VOC emission reduction.

Step 5 - Establish BACT

A recent U.S. EPA policy memorandum concluded that the requirements of the HON for equipment leaks (40 CFR 63 subpart H) constituted LAER and presumptive BACT for VOC emissions from refinery equipment leaks.[9] In that memorandum, the U.S. EPA stated:

> "After a review of the available information, it is EPA's conclusion that for VOC emissions from hydrotreaters and hydrogen units, at both large and small refiners, compliance with the Hazardous Organic National Emission Standards for Hazardous Air Pollutants (HON) (40 CFR Part 63 Subpart H) represents BACT. This is the most stringent control level achievable for VOCs from these units. In concluding that compliance with the HON represents BACT, EPA considered the incremental and average cost of the control strategy as well as any associated energy and environmental impacts. No adverse impacts were found to be associated with the most

[9] See January 19, 2001 memorandum from J.S. Seitz, Director, Office of Air Quality Planning and Standards, U.S. EPA, to Air Division Directors, U.S. EPA Regions I-X. "BACT and LAER for emissions of NO_X and VOC at Tier 2/Gasoline Sulfur Refinery Projects."

effective control option. Consequently, it was determined to be BACT. The control option represents the most stringent control level achieved or contained in a SIP, it therefore also represents LAER for those units."

The substantive requirements of the HON Subpart H LDAR program are applicable to the proposed refinery. (See Sections IV.C.5 and IV.C.7 herein for additional discussion.) Therefore, these requirements were deemed representative of the BACT baseline for VOC emissions from equipment leaks. These requirements were augmented with more stringent leak definitions (100 ppmv for valves and connectors in gas/vapor and light liquid service, 500 ppmv for all other components) and with the equipment design specification provisions from the 28 MID program, as noted below, to reflect BACT precedent.

General:

- All piping, valves, pump systems, and compressor systems shall conform to applicable American National Standards Institute (ANSI), American Petroleum Institute (API), American Society of Mechanical Engineers (ASME), or equivalent codes.
- Underground process pipelines shall contain no buried valves such that fugitive emission monitoring is rendered impractical.
- To the extent that good engineering practice will permit, valves and piping connections shall be located such that they are reasonably accessible for leak-checking during plant operation. Construction of new and reworked piping valves, pump systems, and compressor systems shall conform to applicable ANSI, API, ASME, or equivalent codes.

Connectors:

For equipment in gas/vapor service or in light liquid service, all piping connections shall be welded or flanged. Screwed connections are permissible only on piping smaller than two-inches in diameter.

Pumps and Compressors:

All pumps and compressors shall be equipped with a shaft sealing system that prevents or detects emissions of VOC from the seal. These may include, but are not limited to, dual pump seals with barrier fluid at higher pressure than process pressure; seals degassing to vent control systems; or seals equipped with an automatic seal failure detection and alarm system. Submerged or seal-less pumps may be used to satisfy this requirement.

Valves:

To the extent practical, considering operability and safety factors, the Permittee shall install seal-less or leak-less valves including, but not limited to, welded bonnet bellow and diaphragm valves.

2. BACT for Hydrogen Sulfide

Steps 1 - 4

Available technologies for H_2S equipment leak BACT include leak-less equipment design, LDAR, and continuous instrumental ambient concentration monitoring. Due to the toxicity of H_2S, leak-less equipment design is inherent to units in H_2S service. Worker exposure and process safety regulations, such as the Process Safety Management (PSM) standards administered by the Occupational Safety and Health Administration (OSHA), constrain equipment design and leak related emissions to a greater extent than identified BACT precedents.

In its permit application, the applicant proposed BACT for H_2S equipment leaks mirroring the LDAR requirements for VOC and organic HAP emissions, but with more stringent leak definitions. From the Department's review, no refinery permits were found requiring instrumental H_2S leak monitoring. However, several refinery permits were reviewed that require instrumental H_2S fenceline or area monitoring in conjunction with olfactory H_2S LDAR. Generally, the Department determined that Texas refinery permits require instrumental H_2S area monitoring and California refinery permits require instrumental H_2S monitoring at the facility fenceline. Examples of these permit conditions are provided below.

The following example is from Permit Number 9868A (PSD-TX-102M4) for Phillips Petroleum in Borger, Texas:

> There shall be 45 H_2S monitors placed throughout the sulfur recovery, amine regeneration, and sour water stripping areas. These monitors shall be arranged in such a way that coverage is provided for wind directions varying through 360 degrees. The existing monitors shall be set to alarm at a concentration of 10 ppmv and shall alarm in the control room.

The following example is from the Bay Area Air Quality Management District, *Manual of Procedures*, Volume VI, and is referenced and required under Permit Number A0011 for Shell Oil Products in Martinez, California:

> [T]he person responsible for emissions shall provide recording instrumentation at not less than three sites chosen to monitor the ambient air in the area surrounding the emission source and at least one meteorological station to record wind speed and direction. Additional instruments may be required in specific cases where necessary to meet the intent of the appropriate section. The instruments shall be sufficient in number to give

reasonable assurance that any ground level limits exceeding the applicable standards will be detected. All analytical instrumentation shall be capable of detecting ground level concentrations which exceed the allowable limits. All instrumentation shall be continuous and equipped with either a strip chart recorder or an electronic data recorder which archives data at averaging intervals not to exceed one minute.

The instruments shall be installed and operated in locations which adequately represent maximum ground level concentrations of the measured air pollutants. Sites will be chosen to intercept most frequent ground level maximum concentrations, but in conformance with Regulation 1-510. Proper siting will be taken to require that a preponderant downwind exposure over the calendar year be accumulated by the instruments of given network, during their hours of operation. Downwind exposure exists when the mean wind direction lies in the arc within 22.5 degrees of a direct line from source to monitor. The effective source height and the prevalent stability class associated with the most frequent wind directions are used to calculate the most probable distances for maximum ground level concentrations. A station may be placed at or within the property line if the location is otherwise acceptable and provided that the person responsible for the stations agrees in writing that such location shall, for the purposes of District requirements, be deemed to be off the property from which the emissions occur. The wind measuring site (or sites) shall be located within the general area encompassed by the source and the ground level monitors. In any case, they must comply with the latest edition of the Bay Area Air Quality Management District Meteorological Monitoring Guidance. Final approval of the siting of ground level monitors and meteorological instrumentation shall be with the [District].

Step 5 - Establish BACT

From available BACT precedent data, continuous fenceline ambient monitoring combined with olfactory LDAR was selected as BACT for H_2S equipment leaks. The proposed permit stipulates that an H_2S ambient monitoring plan be developed and submitted to the Department for approval. In summary, the proposed BACT conditions for H_2S equipment leaks are as follows:

- Install, certify, operate, and maintain a network of H_2S concentration monitors at the facility boundary. Monitors shall be set to alarm at a concentration no higher than 0.03 ppmv.
- Submittal of an H_2S monitoring plan.
- Audio, olfactory, and visual checks for H_2S leaks within each operating area containing equipment in H_2S service once per shift.
- Corrective action shall be taken immediately, and no later than one hour upon detection of a leak

In addition to the fenceline ambient monitoring required as BACT, the

Department notes that the proposed refinery also will be subject to the Process Hazard Analysis requirements under 29 CFR 1910.119(e). Specifically, pursuant to 29 CFR 1910.119(e)(3)(iii), the analysis is required to address:

> "Engineering and administrative controls applicable to the hazards and their interrelationships such as appropriate application of detection methodologies to provide early warning of releases. (Acceptable detection methods might include process monitoring and control instrumentation with alarms, and detection hardware such as hydrocarbon sensors.)"

In order to meet these worker safety and health requirements, the proposed refinery will be required to implement an on-site H_2S concentration monitoring program, or equivalent, within the process unit areas containing equipment in H_2S service. This monitoring will be in addition to that required by the proposed air quality permit.

J. Catalyst Regenerators

As described in Section III.M herein, the Catalytic Reforming Unit Catalyst Regenerator and the Butane Conversion Unit Catalyst Regenerator will emit small quantities of CO and NO_X. The Permittee has indicated that the CO and NO_X emissions from each catalyst regenerator are 0.50 and 0.82 lbs per hour, respectively. These values are based on design maximum exhaust gas flow rates and a conservatively estimated concentration of 200 ppmv for each pollutant. Annual emissions are calculated assuming the hourly emission rate for 8,760 hours per year.

Steps 1-4

The Department is not aware of any process improvements that would provided for reductions in CO and NO_X emissions from the catalyst regenerators. Any end-of-pipe control technology, including SCR and oxidation catalyst, could be applied. However, due to the extremely small size of these emission units, any such application would involve unreasonable, adverse economic impacts and minimal environmental benefit. The uncontrolled rates of CO and NO_X emissions from the catalyst regenerators are similar in magnitude to those from a gas-fired heater or boiler with a capacity of approximately 4 MMBtu/hr. Also, the catalyst regenerator exhaust gas exit temperature is less than 200 ºF, so the gas would have to be reheated in order to allow the use of SCR or oxidation catalyst. Based on knowledge of BACT analyses for combustion sources in this size range, the Department expects that the average cost effectiveness of applying these control technologies would be approximately $10,000 per ton of pollutant controlled. In light of the adverse economic impacts and the minimal environmental benefit that would result, the Department does not consider any end-of-pipe control technology to represent BACT for CO and NO_X emissions from the catalyst regenerators.

Draft

Step 5 - Establish BACT

The Permittee has proposed CO and NO_X BACT emission limits of 0.50 lb per hour and 0.82 lb per hour, respectively. These emission limits are based on an exhaust gas concentration of 200 ppmv for each pollutant. The Department concurs with these proposed emission limits, and is not aware of any similar emission units achieving more stringent emission limits.

K. Petroleum Coke Storage and Handling

The handling and storage of petroleum coke, from removal of coke from the coke drums in the Delayed Coking Unit to the loading of coke into rail cars for transport off-site, are potential sources of particulate matter (dust) emissions.

Step 1 - Identify All Control Options

The control technologies that can be used to control particulate matter emissions from the coke handling operations are:

- Enclosures vented to fabric filter baghouses; and
- Wetting of the material to reduce the generation of dust.

Step 2 - Eliminate Technically Infeasible Control Options

Both identified control options are technically feasible for all petroleum coke storage and handling operations.

Step 3 - Characterize Control Effectiveness of Technically Feasible Control Options

Enclosures with fabric filter baghouses comprise the top control option and wetting is the second-ranked control option.

Step 4 - Evaluate More Effective Control Options

For the coke silo, the Permittee has proposed as BACT the use of a fabric filter baghouse designed so that the exhaust particulate matter concentration does not exceed 0.005 grains per dry standard cubic foot (gr/dscf). The applicant also provided cost information for baghouses designed to achieve particulate matter concentrations of 0.002 and 0.003 gr/dscf indicating that these more stringent levels would result in costs of $10,000 or more per ton of incremental particulate matter reduction. The Department concurs that these costs would represent unwarranted, adverse economic impacts. The Department also notes that the proposed limit on particulate matter concentration is more stringent than the most stringent identified equipment specification for fabric filter baghouses on material handling systems. For these reasons, the Department concurs that the applicant's proposed design specification of 0.005 gr/dscf represents BACT.

draft

For other coke handling operations, the Permittee evaluated the use of a total enclosure of the coker pit in conjunction with a closed-vent system and baghouse. Based on information provided by the Permittee, the annualized cost of this control option would be in excess of $600,000 per year. These costs are unreasonable, given the very low emissions from these activities. The Permittee proposed as BACT the use of wet suppression for these operations. The Department concurs that this technology selection represents BACT for these operations.

Step 5 - Establish BACT

For the coke silo fabric filter baghouse, in addition to the particulate matter concentration limit of 0.005 gr/dscf, based on a three-hour average, the Department is imposing a visible emissions standard of zero opacity. This limitation will provide a more readily enforceable emission standard representing BACT, and will also ensure that the BACT emission limits for the proposed refinery are as stringent as the most stringent limits identified at other comparable facilities.

For other coke handling operations, the Department agrees with the applicant's proposed combination of work practices and equipment design requirements representing BACT. The specific requirements include a minimum moisture level of 12 percent in coke in all handling operations; a requirement for a building with flaps enclosing the rail car loading operations; and a requirement for walls surrounding all other coke handling operations.

L. Cooling Tower

The proposed refinery will require a continual supply of cooled water for heat exchangers, condensers, and other process units. This cooled water will be supplied from a forced-draft, wetted-media type cooling tower. This unit circulates warm "return" water through a media that promotes air/water contact and subsequent cooling by evaporation. This type of cooling tower is a source of particulate matter and VOC emissions.

Particulate matter is emitted from wet cooling towers due to the presence of suspended and dissolved solids in water droplets that drift from the cooling tower. As a droplet that drifts from the tower evaporates, the dissolved solids present in the droplet agglomerate into a single particle. The size of the resulting particle depends on the size of the droplet, the mass of the dissolved solids present in the droplet, and the density of the resulting particle.

VOC emissions occur due to evaporation of volatile organic compounds that may be present in the cooling water due to leaks in heat exchangers. As cooling water passes through one side of a water-cooled heat exchanger, if the water side of the exchanger is maintained at a lower pressure than the hydrocarbon fluid side of the exchanger, small amounts of hydrocarbon may leak to the water side.

draft

1. BACT for Particulate Matter

Step 1 - Identify All Control Options

Two particulate matter control options were identified for the proposed cooling tower:

- Replacement of the wet cooling tower with a dry cooling tower; and
- Drift eliminators.

A dry cooling tower is an inherently less-polluting alternative to a wet cooling tower. This type of cooling tower circulates the process water through a large bank of radiator coils. These coils are cooled by forced flow of ambient air on the outer finned surfaces of the radiator. Ambient airflow is driven by very large axial propeller fans, typically located below the radiator bank, so that the air is blown upward through the radiator and the warmer air exits the top of the tower. Because there is no contact between the water and the ambient air, and thus no opportunity for drift, a dry cooling tower would not be a source of particulate matter emissions.

Drift eliminators are located perpendicular to the air flow and are designed to collect and remove condensed water droplets from the air stream. Changes of direction of the air flow passing through the eliminator promotes removal of droplets by coagulation and impaction on the eliminator surfaces. Particulate matter emissions are thus minimized as drift is minimized.

Step 2 - Eliminate Technically Infeasible Control Options

The performance of dry cooling towers is limited by the ambient dry-bulb temperature rather than ambient wet-bulb temperature. Based on information provided by the Permittee, the return cooling water will arrive at the cooling tower at a design temperature of 102.6 ºF and is to be cooled to a design temperature of 85 ºF. The design cooling water temperature cannot be achieved using a dry cooling tower because the design dry-bulb temperature at the proposed site is in excess of 100 ºF. Therefore, this control option is technically infeasible.

Steps 3-5

The only identified, technically feasible control option is the use of high-efficiency drift eliminators in conjunction with the proposed wet cooling tower. There are no significant environmental, energy, or economic impacts that would affect the determination of BACT.

It should be noted that emission testing is not feasible for wet cooling towers due to exhaust characteristics, so the BACT determination is expressed as an

draft

equipment specification rather than an emission limit.

The Permittee proposed as BACT the use of drift eliminators with a vendor-guaranteed maximum total liquid drift of 0.0005 percent of the circulating water flow rate. This is equivalent to the most stringent identified equipment specification for wet cooling towers. The Department concurs that this proposal represents BACT.

2. BACT for Volatile Organic Compounds

Step 1 - Identify All Control Options

Three VOC control options were identified for the proposed cooling tower:

- Replacement of the wet cooling tower with a dry cooling tower;
- Replacement of the direct-contact wet cooling tower with an indirect-contact wet cooling tower; and
- Heat exchanger leak detection and repair.

A dry cooling tower is an inherently less-polluting alternative to a wet cooling tower as described above, in Section V.L.1.

An indirect-contact cooling tower would use a sealed bank of exchanger tubes, bathed in an internally-circulating water cascade, to cool the process water. Because there is no contact between the process cooling water and the ambient air, and thus no opportunity for evaporation, an indirect-contact cooling tower would not be a source of VOC emissions.

A heat exchanger leak detection and repair program for water-cooled heat exchangers would involve monitoring cooling water for the presence of hydrocarbons, and detecting and repairing leaks when hydrocarbons are found. In some instances, suitable control may include installation of hydrocarbon detectors in the exit water downstream of the exchanger to identify leaking units. In addition, this measure would include systematic inspection, preventive maintenance, and repair programs to avoid leakage. This latter function can include routine replacement of seals, exchanger cleaning, and pressure testing of exchanger vessels.

Step 2 - Eliminate Technically Infeasible Control Options

A dry cooling tower is a technically infeasible control option for the reasons described in Section V.L.1.

Step 3 - Characterize Control Effectiveness of Technically Feasible Control Options

The top control option is the use of an indirect-contact cooling tower rather than a direct-contact cooling tower. The other control option is the implementation of a heat exchanger leak detection and repair program.

Step 4 - Evaluate More Effective Control Options

An indirect-contact cooling tower design would encounter a significant energy penalty due to increased pumping requirements; reduced overall temperature differential for heat rejection from the process cooling water; and reduced heat transfer efficiency due to the presence of heat exchanger tube material and tube surface water film. Adverse economic impacts of this control option include the costs associated with the energy penalty; costs of water treatment for the added external water loop; and incremental capital and operating costs of the indirect-contact cooling tower in excess of those associated with the direct-contact cooling tower design. Based on information provided by the Permittee, the incremental cost of this control option is approximately $20,000 per ton of VOC emission reduction. The Department has determined that this is an unreasonable, adverse economic impact. Due to the adverse energy and economic impacts of the more stringent control option, and its comparatively insignificant environmental benefits, the Department agrees with the Permittee's proposal that implementation of a heat exchanger leak detection and repair program represents BACT for the wet cooling tower.

Step 5 - Establish BACT

It should be noted that emission testing is not feasible for wet cooling towers due to exhaust characteristics, so the BACT determination is expressed as a work practice requirement rather than an emission limit.

The required work practice (i.e., heat exchanger leak detection and repair program) requires application of hydrocarbon detectors at the return water outlet from one or a group of process heat exchangers, along with a systematic program of leak inspections and prompt repairs, consistent with the provisions of the SOCMI NESHAP.

M. Internal Combustion Engines

The proposed refinery will include three reciprocating, lean-burn, compression-ignition internal combustion engines fired with Diesel fuel. These will include a 1500-horsepower engine, which will be used to drive an emergency electrical generator, and two 750-horsepower engines, which will be used to drive fire water pumps. Each engine will be permitted to operate for a maximum of 200 hours per year, but actual operation is expected to be considerably less.

The proposed compression-ignition internal combustion engines are generally similar

to engines that are regulated as non-road mobile sources under 40 CFR part 89. These non-road engine emission standards will not apply to the engines at the proposed refinery because the engines will remain at the refinery site for more than 12 months. Notwithstanding this difference in regulatory applicability, the air pollution control techniques for compression-ignition engines such as those at the proposed refinery are generally driven by the emission standards for mobile sources. The mobile source emission regulations, unlike the BACT requirement for stationary sources, is technology-forcing; the current regulations establish emission standards that must be achieved by engines sold in the future and that are much more stringent than the standards that must be achieved today. For example, if the proposed refinery were operating today (in 2004) and required the temporary use of a skid-mounted, 1500-horsepower electrical generator, that engine would likely be compliant with the Tier 1 emission standards for non-road, compression-ignition engines. These emission standards apply to model year 2000 and later engines and include a NO_X emission limit of 0.015 lb per brake horsepower-hour engine output. The recently promulgated Tier 4 emission standards, which apply to model year 2011 and later engines, include a NO_X emission limit of 0.0011 lb per brake horsepower-hour engine output. This represents a 93 percent reduction in allowable emission levels, based on the expectations of U.S. EPA's Office of Mobile Sources with regard to the technological advancements that will be made by the engine manufacturing industry over the next several years.

The Department cannot make its BACT determinations for the internal combustion engines at the proposed refinery using the approach that U.S. EPA's Office of Mobile Sources uses, relying on expectations of future technological advancements, due to differences in the statutory requirements. However, the Department can and does rely on the continued research of U.S. EPA's Office of Mobile Sources with regard to recent technological advancements for control of emissions from non-road, compression-ignition engines.

1. BACT for Sulfur Dioxide

Steps 1-4

The only control option identified for the internal combustion engines is the use of low-sulfur Diesel fuel. This control option is technically feasible and will not cause any adverse energy, environmental, or economic impacts.

Step 5 - Establish BACT

In its initial permit application, the Permittee proposed a Diesel fuel sulfur content of 0.5 percent by weight as the BACT emission limit for SO_2 from compression-ignition internal combustion engines.

Based on a review of available information characterizing availability of lower sulfur fuels, including representations made by the applicant with

regard to the fuels that will be produced at the proposed refinery, the Department determined that a Diesel fuel sulfur content limit of 15 parts per million by weight (ppmw) (equivalent to 0.0015 percent by weight) is achievable. The Permittee adjusted its BACT proposal to reflect this value as the proposed emission limit representing BACT for SO_2 emissions.

The Department concurs that this proposal represents BACT for SO_2 emissions from compression-ignition internal combustion engines. The Department is not aware of any similar sources that are subject to more stringent SO_2 emission limits.

2. BACT for Nitrogen Oxides

Step 1 - Identify All Control Options

Identified control technologies and techniques for NO_X emissions from compression-ignition engines include the following:

- Fuel injection rate shaping and multiple fuel injections, which typically utilize electronically-controlled fuel injection systems that vary the fuel injection rate and method according to engine load and other operating conditions. Lower NO_X emissions are achieved by initially limiting the rapid increase in temperature and pressure in the cylinder, postponing injection of most of the fuel until an established flame exists.
- Charge air cooling, which typically involves lowering the intake manifold temperature using an air-to-air heat exchanger, or aftercooler, located downstream of a turbocharger. Lower NO_X emissions are achieved by reducing the peak combustion temperature.
- Injection timing retard, also called ignition timing retard, which involves delaying the fuel injection point in each engine cycle such that the heat release from fuel combustion occurs during the cylinder expansion. Lower NO_X emissions are achieved by reducing the peak combustion temperature.
- Exhaust gas recirculation, which involves retaining or re-introducing a fraction of the exhaust gases. Lower NO_X emissions are achieved by reducing the peak combustion temperature and by reducing the amount of available molecular oxygen.
- Lean-NO_X catalyst technology, which typically involves the injection of Diesel fuel into the exhaust gas upstream of a zeolite catalyst. The catalyst adsorbs hydrocarbons from the reductant, creating a locally oxygen-poor region in which reduction of NO_X to N_2 and O_2 is promoted.
- NO_X adsorber technology, which typically utilize alkali or alkaline earth metal catalysts to adsorb NO_X on the catalyst surface under the fuel-lean and oxygen-rich conditions typical of Diesel engine

exhaust. Periodically, the catalyst bed is subjected to fuel-rich exhaust in order to desorb the NO_X and regenerate the catalyst. The desorbed NO_X is catalytically reduced over a second catalyst, typically platinum and rhodium. The periodic regeneration step, which may occur as frequently as every 15 seconds or as infrequently as every several minutes during engine operation, comprises only a small fraction of total operating time. The fuel-rich exhaust conditions required for the regeneration step may be achieved by periodic changes in engine cycle operation, using fuel injection rate shaping systems as described above.

- Selective catalytic reduction (SCR), selective non-catalytic reduction (SNCR), and $SCONO_X$, all of which are described in Section V.B.3 herein.

Step 2 - Eliminate Technically Infeasible Control Options

Lean-NO_X catalyst technology, NO_X adsorber technology, and $SCONO_X$ have not been demonstrated to function efficiently on stationary, compression-ignition engines or on sources with similar exhaust gas characteristics. Therefore, these technologies are not considered technically feasible options for controlling NO_X emissions from the internal combustion engines at the proposed refinery.

Step 3 - Characterize Control Effectiveness of Technically Feasible Control Options

The second-ranked control option for NO_X emissions comprises the use of internal combustion engines certified by the engine manufacturer to meet the emission standards for model year 2006 and later non-road, compression-ignition engines, as codified at 40 CFR § 89.112. For the emergency generator engine, with a rated power output in excess of 560 kilowatts, the relevant emission standards are known as the "Tier 2" standards and include a limit of 6.4 grams of combined NO_X plus nonmethane hydrocarbons per kilowatt-hour of output. For the emergency fire water pump engines, each with a rated power output between 130 and 560 kilowatts, the relevant emission standards are known as the "Tier 3" standards and include a limit of 4.0 grams of combined NO_X plus nonmethane hydrocarbons per kilowatt-hour of output. The Department anticipates that the commercially available, compression-ignition engines certified to meet the cited non-road engine emission standards will utilize a combination of control technologies including electronically-controlled fuel injection rate systems for fuel injection shaping, multiple fuel injections, and injection timing retard; charge air cooling; and exhaust gas recirculation. This control option would result in total NO_X emissions of less than 2.5 tons per year from all three internal combustion engines, assuming negligible emissions of nonmethane hydrocarbons.

The highest-ranked control option for NO_X emissions involves the use of SCR in conjunction with the second-ranked control option. There are no available data characterizing the NO_X emission levels achievable with this equipment configuration. For the purposes of this BACT analysis, the Department has assumed that 80 percent reduction in NO_X emissions, down to a total annual NO_X emission level of 0.5 tons from all three engines, is achievable with SCR. This likely overstates the achievable NO_X emission reduction with SCR by a significant amount, as each engine will have very little time operating under the steady-state conditions favorable for SCR system performance. Nonetheless, the reasonableness of the Department's assumption regarding SCR efficiency is not material to the Department's preliminary BACT determination.

Step 4 - Evaluate More Effective Control Options

In the case of each internal combustion engine, the second-ranked control option will not cause any adverse energy, environmental, or economic impacts. The highest-ranked control option (i.e., the addition of SCR), when considered in comparison with the second-ranked control option, will cause adverse energy and economic impacts, and will yield both beneficial and adverse environmental impacts. The adverse energy impact is due to the electrical requirements of the SCR system operation and to the reduction in energy efficiency attributable to the pressure drop across the SCR catalyst grid. The adverse energy impacts are relatively minor and were not a significant factor in the BACT decision.

The adverse environmental impacts attributable to the addition of the SCR system include the use of ammonia reagent, with associated storage, shipping and handling risks; the handling and disposal of a spent catalyst as a solid waste stream; ammonia emissions; and, indirectly, formation of PM_{10} and visible plume from ammonia salt precipitates. The proposed refinery will use aqueous ammonia as the active reagent in its SCR systems, as opposed to the more hazardous anhydrous ammonia, so this is a relatively minor environmental impact and was not a significant factor in the BACT decision. Similarly, extensive industry experience with SCR systems indicates that the removal and disposal of spent SCR catalyst can be conducted safely, with insignificant risk to the environment. To the extent that the safe removal and disposal of spent catalyst results in an economic penalty, that cost is considered in the evaluation of adverse economic impacts discussed below. Otherwise, the environmental impacts of spent catalyst removal and disposal were not a significant factor in the BACT decision.

Ammonia "slip," or ammonia that is injected in the SCR system and exits the unit without participating in the chemical reduction of NO_X emissions, leads directly to emissions of ammonia and indirectly to the formation of visible plumes, secondary particulate matter, and visibility impairment. These

problems are less severe when SCR catalyst is new and activity is highest, because the ammonia injection rate can be set to near-stoichiometric levels. As the catalyst ages, its activity decreases, and a higher ammonia reagent injection rate is required to maintain the rate of the NO_X reduction reaction necessary for continuous compliance with NO_X emission limits. This tends to result in increasing levels of ammonia slip.

The final consideration in the evaluation of alternative NO_X control options is the adverse economic impact associated with the application of SCR for the internal combustion engines. The Department's evaluation of these adverse economic impacts is based on cost information provided by the Permittee in Table 6.11-1 of its revised permit application. The Department's evaluation shows that the cost effectiveness of adding SCR systems to the internal combustion engines is more than $80,000 per ton of NO_X emission reduction, assuming 200 hours of operation per year for each engine. The Department considers these to be significant, adverse economic impacts.

Considering these adverse economic impacts as well as the adverse environmental impacts and the relatively insignificant air quality benefits that would result, the Department concludes that requiring SCR for the internal combustion engines cannot be justified as BACT. Therefore, the Department considers BACT for NO_X emissions from the internal combustion engines to be the use of engines certified by the engine manufacturer to meet the emission standards for model year 2006 and later non-road, compression-ignition engines, as codified at 40 CFR § 89.112.

Step 5 - Establish BACT

The Department considers BACT for NO_X emissions from the three reciprocating, lean-burn, Diesel-fired, compression-ignition internal combustion engines to be the use of engines certified by the engine manufacturer to meet the emission standards for model year 2006 and later non-road, compression-ignition engines, as codified at 40 CFR § 89.112. Due to the very low emissions from these sources, and due to the availability of engines that are certified to achieve this emission level, the Department has determined that an equipment design standard rather than an emission rate limit is appropriate. Compliance with the equipment design standard will be demonstrated using records of the engine manufacturer's emission performance guarantee.

3. BACT for Carbon Monoxide

Step 1 - Identify All Control Options

Identified control technologies and techniques for CO emissions include

combustion modifications and post-combustion control devices (catalytic oxidation or NSCR).

Step 2 - Eliminate Technically Infeasible Control Options

NSCR has not been demonstrated to function efficiently on lean-burn internal combustion engines. Therefore, NSCR is not considered a technically feasible option for controlling CO emissions from the internal combustion engines at the proposed refinery.

Step 3 - Characterize Control Effectiveness of Technically Feasible Control Options

The third-ranked control option for CO emissions comprises the use of internal combustion engines certified by the engine manufacturer to meet the emission standards for model year 2006 and later non-road, compression-ignition engines, as codified at 40 CFR § 89.112. For the emergency generator engine, with a rated power output in excess of 560 kilowatts, the relevant emission standards are known as the "Tier 2" standards and include a limit of 3.5 grams of CO per kilowatt-hour of output. For the emergency fire water pump engines, each with a rated power output between 130 and 560 kilowatts, the relevant emission standards are known as the "Tier 3" standards and include a limit of 3.5 grams of CO per kilowatt-hour of output. The Department anticipates that the commercially available, compression-ignition engines certified to meet the cited non-road engine emission standards will utilize combustion modifications in order to meet these emission standards. This control option would result in total CO emissions of approximately 1.73 tons per year from all three internal combustion engines.

The second-ranked control option for CO emissions comprises the use of internal combustion engines that are not certified by the engine manufacturer to meet the emission standards for model year 2006 and later non-road, compression-ignition engines. Because these engines do not incorporate the NO_X-reducing control techniques described in Section V.M.2 herein, lower CO emissions are possible. Based on data provided in Table 3.4-1 in U.S. EPA's AP-42 emission factor compilation, CO emissions of 0.0055 lb/hp-hr are achievable with this control option. This control option would result in total CO emissions of approximately 1.66 tons per year from all three internal combustion engines.

The highest-ranked control option for each internal combustion engine involves the use of catalytic oxidation in conjunction with the second-ranked control option. There are no available data characterizing the CO emission levels achievable with this equipment configuration. For the purposes of this BACT analysis, the Department has assumed that 90 percent reduction in CO

emissions, down to a total annual CO emission level of 0.17 tons from all three engines, is achievable with catalytic oxidation. This likely overstates the achievable CO emission reduction with oxidation catalyst by a significant amount, as each engine will have very little time operating under the steady-state conditions favorable for oxidation catalyst system performance. Nonetheless, the reasonableness of the Department's assumption regarding oxidation catalyst system efficiency is not material to the Department's preliminary BACT determination.

Step 4 - Evaluate More Effective Control Options

In the case of each internal combustion engine, the third-ranked control option (i.e., combustion controls) will not cause any adverse energy, environmental, or economic impacts. The highest-ranked control option (i.e., the addition of catalytic oxidation), when considered in comparison with the second- or third-ranked control options, will cause adverse energy and economic impacts, and will yield both beneficial and adverse environmental impacts. The adverse energy impact is due to the reduction in energy efficiency attributable to the pressure drop across the oxidation catalyst grid. The adverse energy impacts are relatively minor and were not a significant factor in the BACT decision.

The adverse environmental impacts attributable to the addition of an oxidation catalyst system are due to the handling and disposal of spent catalyst as a solid waste stream. Extensive industry experience with oxidation catalyst systems indicates that the removal and disposal of spent catalyst can be conducted safely, with insignificant risk to the environment. To the extent that the safe removal and disposal of spent catalyst results in an economic penalty, that cost is considered in the evaluation of adverse economic impacts, discussed below. Otherwise, the environmental impacts of spent catalyst removal and disposal were not a significant factor in the BACT decision.

The final consideration in the evaluation of the highest-ranked CO control option is the adverse economic impact associated with the application of oxidation catalyst for the internal combustion engines. The Department's evaluation of these adverse economic impacts is based on cost information provided by the Permittee in Table 6.11-1 of its revised permit application. The Department's evaluation shows that the cost effectiveness of adding oxidation catalyst systems to the internal combustion engines is more than $100,000 per ton of CO emission reduction, assuming 200 hours of operation per year for each engine. The Department considers these to be significant, adverse economic impacts.

Considering these adverse economic impacts as well as the adverse environmental impacts and the relatively insignificant air quality benefits that

would result, the Department concludes that requiring an oxidation catalyst for the internal combustion engines cannot be justified as BACT.

In the case of each internal combustion engine, the second-ranked control option will not cause any adverse energy or economic impacts. However, when considered in comparison with the third-ranked control option, this option will cause adverse environmental impacts. Based on data provided in Table 3.4-1 in U.S. EPA's AP-42 emission factor compilation, NO_X emissions would increase to 0.013 lb/hp-hr under this control option. This represents an increase of approximately 1.4 tons of NO_X per year, in exchange for a CO emission reduction of only 0.07 tons per year. The Department considers the adverse environmental impacts of this control option to outweigh the beneficial environmental impacts.

Therefore, the Department considers BACT for CO emissions from the internal combustion engines to be the use of engines certified by the engine manufacturer to meet the emission standards for model year 2006 and later non-road, compression-ignition engines, as codified at 40 CFR § 89.112.

Step 5 - Establish BACT

The Department considers BACT for CO emissions from the three reciprocating, lean-burn, Diesel-fired, compression-ignition internal combustion engines to be the use of engines certified by the engine manufacturer to meet the emission standards for model year 2006 and later non-road, compression-ignition engines, as codified at 40 CFR § 89.112. Due to the very low emissions from these sources, and due to the availability of engines that are certified to achieve this emission level, the Department has determined that an equipment design standard rather than an emission rate limit is appropriate. Compliance with the equipment design standard will be demonstrated using records of the engine manufacturer's emission performance guarantee.

N. Emergency Flares

Steps 1 - 5

Flares operate primarily as air pollution control devices, but are nonetheless emission sources subject to BACT analyses. The technically feasible control options for emissions of all pollutants from flares are equipment design specifications and work practices: minimizing exit velocity, ensuring adequate heat value of combusted gases, and minimizing the quantity of gases combusted. Each of these control options is technically feasible and is required in the proposed permit for the emergency flares at the proposed refinery.

The equipment design criteria for the emergency flares in the proposed permit are

based largely on the parallel requirements set forth in the NSPS regulations (40 CFR 60.18) and the NESHAP regulations (40 CFR 63.11). These include a maximum allowable exit velocity, a requirement for smokeless operation, and a minimum allowable net heating value for gases combusted in the flares. In addition, the proposed permit includes terms that reflect and make enforceable the Permittee's commitment to operate these flares only to control emissions during periods of upset and malfunction. This latter requirement will have the immediate effect of minimizing the use of the emergency flares and the secondary effect of minimizing total flare emissions. The Department is not aware of any more stringent requirements imposed on flares at any other petroleum refinery, nor any other technically feasible control options for emissions of any pollutants from flares.

O. Miscellaneous Fugitive Dust Sources

Steps 1 - 4

Various activities associated with the construction and operation of the proposed refinery are potential sources of particulate matter (dust) emissions. Numerous work practices are available and technically feasible for minimizing these emissions, as provided by A.A.C. Title 18, Chapter 2, Articles 6 and 7. One control option not addressed by those rules is a requirement that all on-site roadways and vehicle parking lots be paved. The Department considers this to be available and technically feasible.

Step 5 - Establish BACT

The Department has determined that conformance to A.A.C. Title 18, Chapter 2, Articles 6 and 7, plus a requirement for the paving of all on-site roadways and vehicle parking lots, represents BACT for miscellaneous fugitive dust sources. These work practices are included in the proposed permit.

draft

VI. EMISSION LIMITS, TESTING, MONITORING, RECORDKEEPING, AND REPORTING

This section of the Technical Support Document summarizes the requirements that are applicable to each of the emission units at the proposed refinery and describes the rationale of the Department in establishing case-by-case permit terms not discussed elsewhere. These requirements are presented in tabular format in Table VI-A and are in text format in Sections VI.A through VI.CC.

draft

TABLE VI-A. SUMMARY OF PERMIT CONDITIONS					
Process Unit	Emission Unit	Pollutant/ Parameter	Condition (Authority)	Testing	Monitoring/Recordkeeping
Crude Unit					
	Atmospheric Crude Charge Heater				
		Operating Limits	Fired with natural gas and RFG only (PSD)	Not applicable	Recording of fuels combusted
			Maximum heat input 346 MMBtu/hr (PSD)	Not applicable	Monitoring and recording of heat input rate
		SO_2	Maximum H_2S in RFG 0.10 gr/dscf (NSPS)	Initial test using Method 6, 6C, 11, 15, 15A, or 16	SO_2 CEMS or fuel H_2S CEMS
			Maximum sulfur in RFG 35 ppmv (PSD)	Not applicable	SO_2 CEMS, or fuel sulfur CEMS, or fuel H_2S CEMS plus grab sampling & analysis to determine ratio of H_2S to total sulfur
		PM_{10}	Maximum emissions 0.0075 lb/MMBtu (PSD)	Initial and annual tests using Methods 201 or 201A and Method 202	Not applicable
		NO_X	Maximum emissions 0.0125 lb/MMBtu (PSD)	Not applicable	CEMS
			Install, maintain, and operate low-NO_X burners and SCR (PSD)	Not applicable	Not applicable
		CO	Maximum emissions 0.04 lb/MMBtu (PSD)	Not applicable	CEMS

Process Unit	Emission Unit	Pollutant/ Parameter	Condition (Authority)	Testing	Monitoring/Recordkeeping
			Maximum emissions 400 ppmvd @ 3% O_2 (NESHAP)	Not applicable	CEMS
		Ammonia	Maximum emissions 5.0 ppmvd @ 0% O_2 (PSD)	Not applicable	CEMS
	Vacuum Crude Charge Heater				
		Operating Limits	Fired with natural gas and RFG only (PSD)	Not applicable	Recording of fuels combusted
			Maximum heat input 101 MMBtu/hr (PSD)	Not applicable	Monitoring and recording of heat input rate
		SO_2	Maximum H_2S in RFG 0.10 gr/dscf (NSPS)	Initial test using Method 6, 6C, 11, 15, 15A, or 16	SO_2 CEMS or fuel H_2S CEMS
			Maximum sulfur in RFG 35 ppmv (PSD)	Not applicable	SO_2 CEMS, or fuel sulfur CEMS, or fuel H_2S CEMS plus grab sampling & analysis to determine ratio of H_2S to total sulfur
		PM_{10}	Maximum emissions 0.0075 lb/MMBtu (PSD)	Initial and annual tests using Methods 201 or 201A and Method 202	Not applicable
		NO_X	Maximum emissions 0.034 lb/MMBtu (PSD)	Not applicable	CEMS
			Install, maintain, and operate low-NO_X burners (PSD)	Not applicable	Not applicable
		CO	Maximum emissions 0.04 lb/MMBtu (PSD)	Not applicable	CEMS

Process Unit	Emission Unit	Pollutant/ Parameter	Condition (Authority)	Testing	Monitoring/Recordkeeping
			Maximum emissions 400 ppmvd @ 3% O_2 (NESHAP)	Not applicable	CEMS
	Equipment Leaks				
		VOC, Organic HAP, H_2S	Leak detection and repair program (PSD, NESHAP)	Not applicable	Monitoring for leaks; recording of monitoring and repairs
Gas Concentration Plant					
	Distillation Units				
		VOC	Reduce TOC by 98% or to 20 ppmvd @ 3% O_2 by routing into flame zone of process heater(s) (NSPS)	Initial test using Method 18 for process heater(s) with heat input capacity less than 150 MMBtu/hr	Monitor and record flow into process heater(s); monitor and record periods of operation for process heater(s) of heat input capacity 150 MMBtu/hr or greater; monitor and record flame zone temperature for process heater(s) of heat input capacity less than 150 MMBtu/hr; maintain records for performance tests including a description of location vent streams introduced into the process heater and average combustion temperature for process heater(s) of heat input capacity less than 150 MMBtu/hr; maintain records of periods when the vent stream is diverted from the process heater(s) or has no flow rate
	Equipment Leaks				
		VOC, Organic HAP, H_2S	Leak detection and repair program (PSD, NESHAP)	Not applicable	Monitoring for leaks; recording of monitoring and repairs

Process Unit	Emission Unit	Pollutant/ Parameter	Condition (Authority)	Testing	Monitoring/Recordkeeping
Hydrocracker Unit					
	Hydrocracker Unit Charge Heater				
		Operating Limits	Fired with natural gas and RFG only (PSD)	Not applicable	Recording of fuels combusted
			Maximum heat input 70 MMBtu/hr (PSD)	Not applicable	Monitoring and recording of heat input rate
		SO_2	Maximum H_2S in RFG 0.10 gr/dscf (NSPS)	Initial test using Method 6, 6C, 11, 15, 15A, or 16	SO_2 CEMS or fuel H_2S CEMS
			Maximum sulfur in RFG 35 ppmv (PSD)	Not applicable	SO_2 CEMS, or fuel sulfur CEMS, or fuel H_2S CEMS plus grab sampling & analysis to determine ratio of H_2S to total sulfur
		PM_{10}	Maximum emissions 0.0075 lb/MMBtu (PSD)	Initial and annual tests using Methods 201 or 201A and Method 202	Not applicable
		NO_X	Maximum emissions 0.034 lb/MMBtu (PSD)	Not applicable	CEMS
			Install, maintain, and operate low-NO_X burners (PSD)	Not applicable	Not applicable
		CO	Maximum emissions 0.04 lb/MMBtu (PSD)	Not applicable	CEMS
			Maximum emissions 400 ppmvd @ 3% O_2 (NESHAP)	Initial and annual tests using Methods 10, 10A, or 10B	Not applicable

Process Unit	Emission Unit	Pollutant/ Parameter	Condition (Authority)	Testing	Monitoring/Recordkeeping
	Hydrocracker Unit Main Fractionator Heater				
		Operating Limits	Fired with natural gas and RFG only (PSD)	Not applicable	Recording of fuels combusted
			Maximum heat input 211 MMBtu/hr (PSD)	Not applicable	Monitoring and recording of heat input rate
		SO_2	Maximum H_2S in RFG 0.10 gr/dscf (NSPS)	Initial test using Method 6, 6C, 11, 15, 15A, or 16	SO_2 CEMS or fuel H_2S CEMS
			Maximum sulfur in RFG 35 ppmv (PSD)	Not applicable	SO_2 CEMS, or fuel sulfur CEMS, or fuel H_2S CEMS plus grab sampling & analysis to determine ratio of H_2S to total sulfur
		PM_{10}	Maximum emissions 0.0075 lb/MMBtu (PSD)	Initial and annual tests using Methods 201 or 201A and Method 202	Not applicable
		NO_X	Maximum emissions 0.025 lb/MMBtu (PSD)	Not applicable	CEMS
			Install, maintain, and operate low-NO_X burners (PSD)	Not applicable	Not applicable
		CO	Maximum emissions 0.04 lb/MMBtu (PSD)	Not applicable	CEMS
			Maximum emissions 400 ppmvd @ 3% O_2 (NESHAP)	Not applicable	CEMS
	Equipment Leaks				

Process Unit	Emission Unit	Pollutant/ Parameter	Condition (Authority)	Testing	Monitoring/Recordkeeping
		VOC, Organic HAP, H_2S	Leak detection and repair program (PSD, NESHAP)	Not applicable	Monitoring for leaks; recording of monitoring and repairs
Naphtha Hydrotreater Unit					
	Naphtha Hydrotreater Charge Heater				
		Operating Limits	Fired with natural gas and RFG only (PSD)	Not applicable	Recording of fuels combusted
			Maximum heat input 21.4 MMBtu/hr (PSD)	Not applicable	Monitoring and recording of heat input rate
		SO_2	Maximum H_2S in RFG 0.10 gr/dscf (NSPS)	Initial test using Method 6, 6C, 11, 15, 15A, or 16	SO_2 CEMS or fuel H_2S CEMS
			Maximum sulfur in RFG 35 ppmv (PSD)	Not applicable	SO_2 CEMS, or fuel sulfur CEMS, or fuel H_2S CEMS plus grab sampling & analysis to determine ratio of H_2S to total sulfur
		PM_{10}	Maximum emissions 0.0075 lb/MMBtu (PSD)	Initial and annual tests using Methods 201 or 201A and Method 202	Not applicable
		NO_X	Maximum emissions 0.030 lb/MMBtu (PSD)	Not applicable	CEMS
			Install, maintain, and operate low-NO_X burners (PSD)	Not applicable	Not applicable
		CO	Maximum emissions 0.04 lb/MMBtu (PSD)	Not applicable	CEMS

Process Unit	Emission Unit	Pollutant/ Parameter	Condition (Authority)	Testing	Monitoring/Recordkeeping
			Maximum emissions 400 ppmvd @ 3% O_2 (NESHAP)	Initial and annual tests using Methods 10, 10A, or 10B	Not applicable
	Equipment Leaks				
		VOC, Organic HAP, H_2S	Leak detection and repair program (PSD, NESHAP)	Not applicable	Monitoring for leaks; recording of monitoring and repairs
Catalytic Reforming Unit					
	Catalytic Reforming Unit Charge Heater				
		Operating Limits	Fired with natural gas and RFG only (PSD)	Not applicable	Recording of fuels combusted
			Maximum heat input 122 MMBtu/hr (PSD)	Not applicable	Monitoring and recording of heat input rate
		SO_2	Maximum H_2S in RFG 0.10 gr/dscf (NSPS)	Initial test using Method 6, 6C, 11, 15, 15A, or 16	SO_2 CEMS or fuel H_2S CEMS
			Maximum sulfur in RFG 35 ppmv (PSD)	Not applicable	SO_2 CEMS, or fuel sulfur CEMS, or fuel H_2S CEMS plus grab sampling & analysis to determine ratio of H_2S to total sulfur
		PM_{10}	Maximum emissions 0.0075 lb/MMBtu (PSD)	Initial and annual tests using Methods 201 or 201A and Method 202	Not applicable
		NO_X	Maximum emissions 0.0125 lb/MMBtu (PSD)	Not applicable	CEMS

Process Unit	Emission Unit	Pollutant/ Parameter	Condition (Authority)	Testing	Monitoring/Recordkeeping
			Install, maintain, and operate low-NO_X burners and SCR (PSD)	Not applicable	Not applicable
		CO	Maximum emissions 0.04 lb/MMBtu (PSD)	Not applicable	CEMS
			Maximum emissions 400 ppmvd @ 3% O_2 (NESHAP)	Not applicable	CEMS
		Ammonia	Maximum emissions 5.0 ppmvd @ 0% O_2 (PSD)	Not applicable	CEMS
	Catalytic Reforming Unit Interheater No. 1				
		Operating Limits	Fired with natural gas and RFG only (PSD)	Not applicable	Recording of fuels combusted
			Maximum heat input 192 MMBtu/hr (PSD)	Not applicable	Monitoring and recording of heat input rate
		SO_2	Maximum H_2S in RFG 0.10 gr/dscf (NSPS)	Initial test using Method 6, 6C, 11, 15, 15A, or 16	SO_2 CEMS or fuel H_2S CEMS
			Maximum sulfur in RFG 35 ppmv (PSD)	Not applicable	SO_2 CEMS, or fuel sulfur CEMS, or fuel H_2S CEMS plus grab sampling & analysis to determine ratio of H_2S to total sulfur
		PM_{10}	Maximum emissions 0.0075 lb/MMBtu (PSD)	Initial and annual tests using Methods 201 or 201A and Method 202	Not applicable
		NO_X	Maximum emissions 0.0125 lb/MMBtu (PSD)	Not applicable	CEMS

Process Unit	Emission Unit	Pollutant/ Parameter	Condition (Authority)	Testing	Monitoring/Recordkeeping
			Install, maintain, and operate low-NO_X burners and SCR (PSD)	Not applicable	Not applicable
		CO	Maximum emissions 0.04 lb/MMBtu (PSD)	Not applicable	CEMS
			Maximum emissions 400 ppmvd @ 3% O_2 (NESHAP)	Not applicable	CEMS
		Ammonia	Maximum emissions 5.0 ppmvd @ 0% O_2 (PSD)	Not applicable	CEMS
	Catalytic Reforming Unit Interheater No. 2				
		Operating Limits	Fired with natural gas and RFG only (PSD)	Not applicable	Recording of fuels combusted
			Maximum heat input 129 MMBtu/hr (PSD)	Not applicable	Monitoring and recording of heat input rate
		SO_2	Maximum H_2S in RFG 0.10 gr/dscf (NSPS)	Initial test using Method 6, 6C, 11, 15, 15A, or 16	SO_2 CEMS or fuel H_2S CEMS
			Maximum sulfur in RFG 35 ppmv (PSD)	Not applicable	SO_2 CEMS, or fuel sulfur CEMS, or fuel H_2S CEMS plus grab sampling & analysis to determine ratio of H_2S to total sulfur
		PM_{10}	Maximum emissions 0.0075 lb/MMBtu (PSD)	Initial and annual tests using Methods 201 or 201A and Method 202	Not applicable
		NO_X	Maximum emissions 0.0125 lb/MMBtu (PSD)	Not applicable	CEMS

Process Unit	Emission Unit	Pollutant/ Parameter	Condition (Authority)	Testing	Monitoring/Recordkeeping
			Install, maintain, and operate low-NO_X burners and SCR (PSD)	Not applicable	Not applicable
		CO	Maximum emissions 0.04 lb/MMBtu (PSD)	Not applicable	CEMS
			Maximum emissions 400 ppmvd @ 3% O_2 (NESHAP)	Not applicable	CEMS
		Ammonia	Maximum emissions 5.0 ppmvd @ 0% O_2 (PSD)	Not applicable	CEMS
	Catalytic Reforming Unit Debutanizer Reboiler				
		Operating Limits	Fired with natural gas and RFG only (PSD)	Not applicable	Recording of fuels combusted
			Maximum heat input 23.2 MMBtu/hr (PSD)	Not applicable	Monitoring and recording of heat input rate
		SO_2	Maximum H_2S in RFG 0.10 gr/dscf (NSPS)	Initial test using Method 6, 6C, 11, 15, 15A, or 16	SO_2 CEMS or fuel H_2S CEMS
			Maximum sulfur in RFG 35 ppmv (PSD)	Not applicable	SO_2 CEMS, or fuel sulfur CEMS, or fuel H_2S CEMS plus grab sampling & analysis to determine ratio of H_2S to total sulfur
		PM_{10}	Maximum emissions 0.0075 lb/MMBtu (PSD)	Initial and annual tests using Methods 201 or 201A and Method 202	Not applicable
		NO_X	Maximum emissions 0.030 lb/MMBtu (PSD)	Not applicable	CEMS

Process Unit	Emission Unit	Pollutant/ Parameter	Condition (Authority)	Testing	Monitoring/Recordkeeping
			Install, maintain, and operate low-NO_X burners (PSD)	Not applicable	Not applicable
		CO	Maximum emissions 0.04 lb/MMBtu (PSD)	Not applicable	CEMS
			Maximum emissions 400 ppmvd @ 3% O_2 (NESHAP)	Initial and annual tests using Methods 10, 10A, or 10B	Not applicable
	Catalytic Reforming Unit Catalyst Regenerator				
		Equipment Design / Work Practice	At all times, operate in a manner consistent with good air pollution control practices for minimizing emissions (NESHAP)	Not applicable	Startup, shutdown, and malfunction plan
		NO_X	Maximum emissions 0.82 lb/hr (PSD)	Initial and annual tests using Methods 7 or 7E	Not applicable
		CO	Maximum emissions 0.50 lb/hr (PSD)	Initial and annual tests using Methods 10 or 10B	Not applicable
		Organic HAP	If reactor vent pressure exceeds 5 psig, reduce TOC to 20 ppmvd @ 3% O_2 (NESHAP)	Initial test using Method 25A	Operation, maintenance and monitoring plan

Process Unit	Emission Unit	Pollutant/ Parameter	Condition (Authority)	Testing	Monitoring/Recordkeeping
			Maintain daily average ratio of perchloroethylene feed rate to catalyst circulation rate at or below the maximum ratio established during performance testing	Not applicable	Monitor and record hourly and daily average perchloroethylene feed rate and catalyst circulation rate; determine and record daily average ratio of perchloroethylene feed rate to catalyst circulation rate
		Inorganic HAP	Reduce HCl by 97% or to 10 ppmvd @ 3% O_2 using a caustic scrubber (NESHAP)	Initial test using Method 26A	Operation, maintenance and monitoring plan
			Maintain daily average pH of scrubbing liquid above the minimum level established during performance testing	Not applicable	Monitor and record daily average scrubbing liquid pH
			Maintain daily average scrubber liquid-to-gas ratio above the minimum ratio established during performance testing	Not applicable	Monitor and record scrubbing liquid flow rate and exhaust gas flow rate; determine and record hourly and daily average liquid-to-gas ratio
		Visible Emissions	Maximum opacity 20% (State Rule)	Not applicable	Not applicable
	Equipment Leaks				
		VOC, Organic HAP, H_2S	Leak detection and repair program (PSD, NESHAP)	Not applicable	Monitoring for leaks; recording of monitoring and repairs
Isomerization Unit					
	Equipment Leaks				

Process Unit	Emission Unit	Pollutant/ Parameter	Condition (Authority)	Testing	Monitoring/Recordkeeping
		VOC, Organic HAP, H_2S	Leak detection and repair program (PSD, NESHAP)	Not applicable	Monitoring for leaks; recording of monitoring and repairs
Distillate Hydrotreater Unit					
	Distillate Hydrotreater Charge Heater				
		Operating Limits	Fired with natural gas and RFG only (PSD)	Not applicable	Recording of fuels combusted
			Maximum heat input 25 MMBtu/hr (PSD)	Not applicable	Monitoring and recording of heat input rate
		SO_2	Maximum H_2S in RFG 0.10 gr/dscf (NSPS)	Initial test using Method 6, 6C, 11, 15, 15A, or 16	SO_2 CEMS or fuel H_2S CEMS
			Maximum sulfur in RFG 35 ppmv (PSD)	Not applicable	SO_2 CEMS, or fuel sulfur CEMS, or fuel H_2S CEMS plus grab sampling & analysis to determine ratio of H_2S to total sulfur
		PM_{10}	Maximum emissions 0.0075 lb/MMBtu (PSD)	Initial and annual tests using Methods 201 or 201A and Method 202	Not applicable
		NO_X	Maximum emissions 0.033 lb/MMBtu (PSD)	Not applicable	CEMS
			Install, maintain, and operate low-NO_X burners (PSD)	Not applicable	Not applicable
		CO	Maximum emissions 0.04 lb/MMBtu (PSD)	Not applicable	CEMS

Process Unit	Emission Unit	Pollutant/ Parameter	Condition (Authority)	Testing	Monitoring/Recordkeeping
			Maximum emissions 400 ppmvd @ 3% O_2 (NESHAP)	Initial and annual tests using Methods 10, 10A, or 10B	Not applicable
	Distillate Hydrotreater Splitter Reboiler				
		Operating Limits	Fired with natural gas and RFG only (PSD)	Not applicable	Recording of fuels combusted
			Maximum heat input 117 MMBtu/hr (PSD)	Not applicable	Monitoring and recording of heat input rate
		SO_2	Maximum H_2S in RFG 0.10 gr/dscf (NSPS)	Initial test using Method 6, 6C, 11, 15, 15A, or 16	SO_2 CEMS or fuel H_2S CEMS
			Maximum sulfur in RFG 35 ppmv (PSD)	Not applicable	SO_2 CEMS, or fuel sulfur CEMS, or fuel H_2S CEMS plus grab sampling & analysis to determine ratio of H_2S to total sulfur
		PM_{10}	Maximum emissions 0.0075 lb/MMBtu (PSD)	Initial and annual tests using Methods 201 or 201A and Method 202	Not applicable
		NO_X	Maximum emissions 0.032 lb/MMBtu (PSD)	Not applicable	CEMS
			Install, maintain, and operate low-NO_X burners (PSD)	Not applicable	Not applicable
		CO	Maximum emissions 0.04 lb/MMBtu (PSD)	Not applicable	CEMS
			Maximum emissions 400 ppmvd @ 3% O_2 (NESHAP)	Not applicable	CEMS

Process Unit	Emission Unit	Pollutant/ Parameter	Condition (Authority)	Testing	Monitoring/Recordkeeping
	Equipment Leaks				
		VOC, Organic HAP, H_2S	Leak detection and repair program (PSD, NESHAP)	Not applicable	Monitoring for leaks; recording of monitoring and repairs
Butane Conversion Unit					
	Butane Conversion Unit Dehydrogenation Reactor Charge Heater				
		Operating Limits	Fired with natural gas and RFG only (PSD)	Not applicable	Recording of fuels combusted
			Maximum heat input 311 MMBtu/hr (PSD)	Not applicable	Monitoring and recording of heat input rate
		SO_2	Maximum H_2S in RFG 0.10 gr/dscf (NSPS)	Initial test using Method 6, 6C, 11, 15, 15A, or 16	SO_2 CEMS or fuel H_2S CEMS
			Maximum sulfur in RFG 35 ppmv (PSD)	Not applicable	SO_2 CEMS, or fuel sulfur CEMS, or fuel H_2S CEMS plus grab sampling & analysis to determine ratio of H_2S to total sulfur
		PM_{10}	Maximum emissions 0.0075 lb/MMBtu (PSD)	Initial and annual tests using Methods 201 or 201A and Method 202	Not applicable
		NO_X	Maximum emissions 0.0125 lb/MMBtu (PSD)	Not applicable	CEMS
			Install, maintain, and operate low-NO_X burners and SCR (PSD)	Not applicable	Not applicable

Process Unit	Emission Unit	Pollutant/ Parameter	Condition (Authority)	Testing	Monitoring/Recordkeeping
		CO	Maximum emissions 0.04 lb/MMBtu (PSD)	Not applicable	CEMS
			Maximum emissions 400 ppmvd @ 3% O_2 (NESHAP)	Not applicable	CEMS
		Ammonia	Maximum emissions 5.0 ppmvd @ 0% O_2 (PSD)	Not applicable	CEMS
	Butane Conversion Unit Dehydrogenation Reactor Interheater				
		Operating Limits	Fired with natural gas and RFG only (PSD)	Not applicable	Recording of fuels combusted
			Maximum heat input 328 MMBtu/hr (PSD)	Not applicable	Monitoring and recording of heat input rate
		SO_2	Maximum H_2S in RFG 0.10 gr/dscf (NSPS)	Initial test using Method 6, 6C, 11, 15, 15A, or 16	SO_2 CEMS or fuel H_2S CEMS
			Maximum sulfur in RFG 35 ppmv (PSD)	Not applicable	SO_2 CEMS, or fuel sulfur CEMS, or fuel H_2S CEMS plus grab sampling & analysis to determine ratio of H_2S to total sulfur
		PM_{10}	Maximum emissions 0.0075 lb/MMBtu (PSD)	Initial and annual tests using Methods 201 or 201A and Method 202	Not applicable
		NO_X	Maximum emissions 0.0125 lb/MMBtu (PSD)	Not applicable	CEMS
			Install, maintain, and operate low-NO_X burners and SCR (PSD)	Not applicable	Not applicable

Process Unit	Emission Unit	Pollutant/ Parameter	Condition (Authority)	Testing	Monitoring/Recordkeeping
		CO	Maximum emissions 0.04 lb/MMBtu (PSD)	Not applicable	CEMS
			Maximum emissions 400 ppmvd @ 3% O_2 (NESHAP)	Not applicable	CEMS
		Ammonia	Maximum emissions 5.0 ppmvd @ 0% O_2 (PSD)	Not applicable	CEMS
	Butane Conversion Unit Isostripper Reboiler				
		Operating Limits	Fired with natural gas and RFG only (PSD)	Not applicable	Recording of fuels combusted
			Maximum heat input 222 MMBtu/hr (PSD)	Not applicable	Monitoring and recording of heat input rate
		SO_2	Maximum H_2S in RFG 0.10 gr/dscf (NSPS)	Initial test using Method 6, 6C, 11, 15, 15A, or 16	SO_2 CEMS or fuel H_2S CEMS
			Maximum sulfur in RFG 35 ppmv (PSD)	Not applicable	SO_2 CEMS, or fuel sulfur CEMS, or fuel H_2S CEMS plus grab sampling & analysis to determine ratio of H_2S to total sulfur
		PM_{10}	Maximum emissions 0.0075 lb/MMBtu (PSD)	Initial and annual tests using Methods 201 or 201A and Method 202	Not applicable
		NO_X	Maximum emissions 0.030 lb/MMBtu (PSD)	Not applicable	CEMS
			Install, maintain, and operate low-NO_X burners (PSD)	Not applicable	Not applicable

Process Unit	Emission Unit	Pollutant/ Parameter	Condition (Authority)	Testing	Monitoring/Recordkeeping
		CO	Maximum emissions 0.04 lb/MMBtu (PSD)	Not applicable	CEMS
			Maximum emissions 400 ppmvd @ 3% O_2 (NESHAP)	Not applicable	CEMS
	Butane Conversion Unit Catalyst Regenerator				
		Visible Emissions	Maximum opacity 20% (State Rule)	Not applicable	Not applicable
		NO_X	Maximum emissions 0.82 lb/hr (PSD)	Initial and annual tests using Methods 7 or 7E	Not applicable
		CO	Maximum emissions 0.50 lb/hr (PSD)	Initial and annual tests using Methods 10 or 10B	Not applicable
	Butane Conversion Unit Distillation Units				

Process Unit	Emission Unit	Pollutant/ Parameter	Condition (Authority)	Testing	Monitoring/Recordkeeping
		VOC	Reduce TOC by 98% or to 20 ppmvd @ 3% O_2 by routing into flame zone of process heater(s) (NSPS)	Initial test using Method 18 for process heater(s) with heat input capacity less than 150 MMBtu/hr	Monitor and record flow into process heater(s); monitor and record periods of operation for process heater(s) of heat input capacity 150 MMBtu/hr or greater; monitor and record flame zone temperature for process heater(s) of heat input capacity less than 150 MMBtu/hr; maintain records for performance tests including a description of location vent streams introduced into the process heater and average combustion temperature for process heater(s) of heat input capacity less than 150 MMBtu/hr; maintain records of periods when the vent stream is diverted from the process heater(s) or has no flow rate
	Reactor Processes				
		VOC	Reduce TOC by 98% or to 20 ppmvd @ 3% O_2 by routing into flame zone of process heater(s) (NSPS)	Not applicable	Monitor and record any vent stream flow that is bypassed or diverted from process heater flame zone(s)
	Equipment Leaks				
		VOC, Organic HAP, H_2S	Leak detection and repair program (PSD, NESHAP)	Not applicable	Monitoring for leaks; recording of monitoring and repairs
Benzene Reduction Unit					
	Equipment Leaks				

Process Unit	Emission Unit	Pollutant/ Parameter	Condition (Authority)	Testing	Monitoring/Recordkeeping
		VOC, Organic HAP, H_2S	Leak detection and repair program (PSD, NESHAP)	Not applicable	Monitoring for leaks; recording of monitoring and repairs
Delayed Coking Unit					
	Delayed Coking Unit Charge Heater No. 1				
		Operating Limits	Fired with natural gas and RFG only (PSD)	Not applicable	Recording of fuels combusted
			Maximum heat input 99.5 MMBtu/hr (PSD)	Not applicable	Monitoring and recording of heat input rate
		SO_2	Maximum H_2S in RFG 0.10 gr/dscf (NSPS)	Initial test using Method 6, 6C, 11, 15, 15A, or 16	SO_2 CEMS or fuel H_2S CEMS
			Maximum sulfur in RFG 35 ppmv (PSD)	Not applicable	SO_2 CEMS, or fuel sulfur CEMS, or fuel H_2S CEMS plus grab sampling & analysis to determine ratio of H_2S to total sulfur
		PM_{10}	Maximum emissions 0.0075 lb/MMBtu (PSD)	Initial and annual tests using Methods 201 or 201A and Method 202	Not applicable
		NO_X	Maximum emissions 0.030 lb/MMBtu (PSD)	Not applicable	CEMS
			Install, maintain, and operate low-NO_X burners (PSD)	Not applicable	Not applicable
		CO	Maximum emissions 0.04 lb/MMBtu (PSD)	Not applicable	CEMS

Process Unit	Emission Unit	Pollutant/ Parameter	Condition (Authority)	Testing	Monitoring/Recordkeeping
			Maximum emissions 400 ppmvd @ 3% O_2 (NESHAP)	Initial and annual tests using Methods 10, 10A, or 10B	Not applicable
	Delayed Coking Unit Charge Heater No. 2				
		Operating Limits	Fired with natural gas and RFG only (PSD)	Not applicable	Recording of fuels combusted
			Maximum heat input 99.5 MMBtu/hr (PSD)	Not applicable	Monitoring and recording of heat input rate
		SO_2	Maximum H_2S in RFG 0.10 gr/dscf (NSPS)	Initial test using Method 6, 6C, 11, 15, 15A, or 16	SO_2 CEMS or fuel H_2S CEMS
			Maximum sulfur in RFG 35 ppmv (PSD)	Not applicable	SO_2 CEMS, or fuel sulfur CEMS, or fuel H_2S CEMS plus grab sampling & analysis to determine ratio of H_2S to total sulfur
		PM_{10}	Maximum emissions 0.0075 lb/MMBtu (PSD)	Initial and annual tests using Methods 201 or 201A and Method 202	Not applicable
		NO_X	Maximum emissions 0.030 lb/MMBtu (PSD)	Not applicable	CEMS
			Install, maintain, and operate low-NO_X burners (PSD)	Not applicable	Not applicable
		CO	Maximum emissions 0.04 lb/MMBtu (PSD)	Not applicable	CEMS

Process Unit	Emission Unit	Pollutant/ Parameter	Condition (Authority)	Testing	Monitoring/Recordkeeping
			Maximum emissions 400 ppmvd @ 3% O_2 (NESHAP)	Initial and annual tests using Methods 10, 10A, or 10B	Not applicable
	Equipment Leaks				
		VOC, Organic HAP, H_2S	Leak detection and repair program (PSD, NESHAP)	Not applicable	Monitoring for leaks; recording of monitoring and repairs
Petroleum Coke Storage, Handling, and Loading					
	Coke Pit and Coke Pad				
		Equipment Design / Work Practice	Maximum combined surface area of 48,000 square feet (PSD)	Not applicable	Not applicable
			Completely walled enclosure, with all coke storage and handling operations conducted at least five feet below the lowest point on the top of the walled enclosure (PSD)	Not applicable	Once per shift, determine and record height of coke storage piles
			Minimum coke moisture content of 12% by weight throughout the Coke Pit and Coke Pad (PSD)	Not applicable	Once per day, collect and analyze a coke sample from the Coke Pad; determine and record coke moisture content

Process Unit	Emission Unit	Pollutant/ Parameter	Condition (Authority)	Testing	Monitoring/Recordkeeping
		Visible Emissions	No visible emissions across the refinery's property boundary (PSD)	Not applicable	Once per shift, conduct visible emissions observations using Method 22
	Coke Crusher				
		Equipment Design / Work Practice	Located within the Coke Pad enclosure (PSD)	Not applicable	Not applicable
			Partial enclosure surrounding all sides and top (PSD)	Not applicable	Not applicable
			Minimum coke moisture content of 12% by weight (PSD)	Not applicable	Once per day, collect and analyze a coke sample from the transfer point between the Coke Crusher and the Coke Conveyor; determine and record coke moisture content
		Visible Emissions	No visible emissions (PSD)	Not applicable	Once per shift, conduct visible emissions observations using Method 22
	Coke Conveyor				
		Equipment Design / Work Practice	Conveying only from Coke Crusher to Coke Silo (PSD)	Not applicable	Not applicable
			Full enclosure of Coke Conveyor and transfer points (PSD)	Not applicable	Not applicable

Process Unit	Emission Unit	Pollutant/ Parameter	Condition (Authority)	Testing	Monitoring/Recordkeeping
			Minimum coke moisture content of 12% by weight (PSD)	Not applicable	Once per day, collect and analyze a coke sample from the transfer point between the Coke Crusher and the Coke Conveyor; determine and record coke moisture content
		Visible Emissions	No visible emissions (PSD)	Not applicable	Once per shift, conduct visible emissions observations using Method 22
	Coke Silo				
		Equipment Design / Work Practice	Fully enclosed, with all emissions vented through a baghouse (PSD)	Not applicable	Operation and maintenance plan
		PM	Maximum emissions 0.005 gr/dscf (PSD, State Rule)	Initial and annual tests using Method 5	Operation and maintenance plan
		Visible Emissions	No visible emissions (PSD)	Not applicable	Once per shift, conduct visible emissions observations using Method 22
	Coke Rail Car Loading				
		Equipment Design / Work Practice	Full enclosure, with overlapping flaps or sliding doors on the rail car entrance and exit (PSD)	Not applicable	Not applicable
			Coke transfer using a telescoping chute, with a maximum coke drop distance of four feet (PSD)	Not applicable	Not applicable

Process Unit	Emission Unit	Pollutant/ Parameter	Condition (Authority)	Testing	Monitoring/Recordkeeping
			Minimum coke moisture content of 12% by weight (PSD)	Not applicable	Once per day, collect and analyze a coke sample from the Coke Rail Car Loading Chute; determine and record coke moisture content
		Visible Emissions	No visible emissions (PSD)	Not applicable	Once per shift, conduct visible emissions observations using Method 22
Amine Regeneration Unit					
	Amine Regenerator				
		Operating Limits	All gases containing H_2S or VOC routed to Sulfur Recovery Plant (PSD)	Not applicable	Not applicable
			Maximum of 210,000 gallons rich amine solution processed per day (PSD)	Not applicable	Once per day, determine and record the quantity of rich amine solution processed
			Rich amine solution re-routed to the Rich Amine Tank and acid gas flaring ceased within fifteen minutes after the start of the acid gas flaring or other upset that results in excess emissions (PSD)	Not applicable	Not applicable (recordkeeping requirements are in effect for emission points at which excess SO_2 emissions may occur)
	Rich Amine Tank				

Process Unit	Emission Unit	Pollutant/ Parameter	Condition (Authority)	Testing	Monitoring/Recordkeeping
		Operating Limits	Minimum available rich amine solution storage capacity 210,000 gallons (PSD)	Not applicable	Maintain records of tank dimensions and capacity; once per day, determine and record quantity of liquid being stored
			True vapor pressure of stored liquids less than 3.4 kPa (NESHAP)	Not applicable	Maintain records of true vapor pressure of stored liquids
	Lean Amine Tank				
		Operating Limits	Minimum available lean amine solution 210,000 gallons (PSD)	Not applicable	Maintain records of tank dimensions and capacity; once per day, determine and record available lean amine solution
			True vapor pressure of stored liquids less than 3.4 kPa (NESHAP)	Not applicable	Maintain records of true vapor pressure of stored liquids
	Rich Amine Three Phase Separator				
		Operating Limit	Vent stream routed to Sulfur Recovery Plant Thermal Oxidizer (PSD, NESHAP)	Not applicable	Monitor and record any vent stream flow that is bypassed or diverted from the Sulfur Recovery Plant Thermal Oxidizer, including the time and duration of such bypass or diversion; alternatively, secure the bypass line valve in the closed position, and conduct and record monthly visual inspections of the valve closure mechanism
	Equipment Leaks				

Process Unit	Emission Unit	Pollutant/ Parameter	Condition (Authority)	Testing	Monitoring/Recordkeeping
		VOC, Organic HAP, H_2S	Leak detection and repair program (PSD, NESHAP)	Not applicable	Monitoring for leaks; recording of monitoring and repairs
Sour Water Stripper					
	Sour Water Flash Drum				
		Operating Limit	Vent stream routed to Sulfur Recovery Plant Thermal Oxidizer (PSD, NESHAP)	Not applicable	Monitor and record any vent stream flow that is bypassed or diverted from the Sulfur Recovery Plant Thermal Oxidizer, including the time and duration of such bypass or diversion; alternatively, secure the bypass line valve in the closed position, and conduct and record monthly visual inspections of the valve closure mechanism
	Sour Water Stripper				
		Operating Limits	All gases containing H_2S or VOC routed to Sulfur Recovery Plant (PSD)	Not applicable	Not applicable
			Maximum of 3.78 million gallons sour water processed per day (PSD)	Not applicable	Once per day, determine and record the quantity of sour water processed
			Sour water re-routed to the Sour Water Tank and acid gas flaring ceased within fifteen minutes after the start of the acid gas flaring or other upset that results in excess emissions (PSD)	Not applicable	Not applicable (recordkeeping requirements are in effect for emission points at which excess SO_2 emissions may occur)

Process Unit	Emission Unit	Pollutant/ Parameter	Condition (Authority)	Testing	Monitoring/Recordkeeping
	Sour Water Tank				
		Operating Limits	Minimum available sour water storage capacity 3.78 million gallons (PSD)	Not applicable	Maintain records of tank dimensions and capacity; once per day, determine and record quantity of liquid being stored and available storage capacity
			True vapor pressure of stored liquids less than 76.6 kPa (NSPS)	Not applicable	Maintain records of true vapor pressure of stored liquids
		Equipment Design	Equipped with fixed roof and internal floating roof with dual seals	Conduct inspection of internal floating roof and seals before initial fill, each time the tank is emptied and degassed, and at least annually	Not applicable
		Operating Limits	Vent stream routed to a dedicated dual carbon canister system (PSD)	Not applicable	Daily monitoring of exhaust stream to detect breakthrough.
	Equipment Leaks				
		VOC, Organic HAP, H_2S	Leak detection and repair program (PSD, NESHAP)	Not applicable	Monitoring for leaks; recording of monitoring and repairs
Sulfur Recovery Plant					
	Sulfur Recovery Units				

Process Unit	Emission Unit	Pollutant/ Parameter	Condition (Authority)	Testing	Monitoring/Recordkeeping
		Equipment Design / Work Practice	At all times, operate in a manner consistent with good air pollution control practices for minimizing emissions (NESHAP)	Not applicable	Startup, shutdown, and malfunction plan
		Operating Limits	Vent stream routed to inlet of Tail Gas Treatment Unit (PSD)	Not applicable	Operation, maintenance and monitoring plan
			Vent stream from Tail Gas Treatment Unit routed to inlet of Sulfur Recovery Plant Thermal Oxidizer (PSD)	Not applicable	Operation, maintenance and monitoring plan
	Sulfur Recovery Plant Thermal Oxidizer				
		Operating Limits	Not applicable	Not applicable	Monitoring and recording of heat input rate
		SO_2	Maximum exhaust concentration 250 ppmvd @ 0% O_2 (NSPS, NESHAP)	Initial test using Method 6 or 6C	CEMS
			Maximum emissions 33.5 lb/hr (PSD)	Not applicable	CEMS

Process Unit	Emission Unit	Pollutant/ Parameter	Condition (Authority)	Testing	Monitoring/Recordkeeping
		VOC	Reduce emissions of VOC in vent streams from Sour Water Flash Drum and Rich Amine Three Phase Separator by 98% or to 20 ppmvd @ 3% O_2, whichever is less stringent (NESHAP, PSD)	Initial test using Method 18	Not applicable
			Maintain exhaust gas volumetric flow rate at or below the level that corresponds to a minimum residence time of 0.75 seconds (NESHAP, PSD)	Not applicable	Monitoring and recording of exhaust gas volumetric flow rate
			Maintain combustion chamber temperature at least as high as the level established during the performance test (NESHAP, PSD)	Not applicable	Monitoring and recording of combustion chamber temperature
		Reduced Sulfur Compounds	Maximum emissions 0.089 lb/hr (PSD)	Initial test using Method 15	Not applicable
			Maintain combustion chamber temperature at least as high as the level established during the performance test	Not applicable	Monitoring and recording of combustion chamber temperature

Process Unit	Emission Unit	Pollutant/ Parameter	Condition (Authority)	Testing	Monitoring/Recordkeeping
		NO_X	Maximum emissions 0.06 lb/MMBtu (PSD)	Not applicable	CEMS
			Install, maintain, and operate low-NO_X burners (PSD)	Not applicable	Not applicable
	Sulfur Pits				
		Operating Limit	Vent stream routed to inlet of a Sulfur Recovery Unit (PSD)	Not applicable	Operation, maintenance and monitoring plan
	MDEA Storage Tank				
		Operating Limits	True vapor pressure of stored liquids less than 3.4 kPa (PSD)	Not applicable	Maintain records of true vapor pressure of stored liquids
		Equipment Design / Work Practice	Not applicable	Not applicable	Maintain records of storage tank dimensions and capacity
	Sulfur Product Loading Racks				
		Operating Limit	Maximum of 15 ppmw H_2S in sulfur being loaded into trucks or rail cars (PSD)	Not applicable	Once per day, analyze and record H_2S in sulfur stored in Sulfur Pit No. 1 and Sulfur Pit No. 2
	Equipment Leaks				
		VOC, Organic HAP, H_2S	Leak detection and repair program (PSD, NESHAP)	Not applicable	Monitoring for leaks; recording of monitoring and repairs
Hydrogen Plant					

Process Unit	Emission Unit	Pollutant/ Parameter	Condition (Authority)	Testing	Monitoring/Recordkeeping
	Hydrogen Reformer Heater				
		Operating Limits	Fired with natural gas and RFG only (PSD)	Not applicable	Recording of fuels combusted
			Maximum heat input 1,435 MMBtu/hr (PSD)	Not applicable	Monitoring and recording of heat input rate
		SO_2	Maximum H_2S in RFG 0.10 gr/dscf (NSPS)	Initial test using Method 6, 6C, 11, 15, 15A, or 16	SO_2 CEMS or fuel H_2S CEMS
			Maximum sulfur in RFG 35 ppmv (PSD)	Not applicable	SO_2 CEMS, or fuel sulfur CEMS, or fuel H_2S CEMS plus grab sampling & analysis to determine ratio of H_2S to total sulfur
		PM_{10}	Maximum emissions 0.0075 lb/MMBtu (PSD)	Initial and annual tests using Methods 201 or 201A and Method 202	Not applicable
		NO_X	Maximum emissions 0.0125 lb/MMBtu (PSD)	Not applicable	CEMS
			Install, maintain, and operate low-NO_X burners and SCR (PSD)	Not applicable	Not applicable
		CO	Maximum emissions 0.04 lb/MMBtu (PSD)	Not applicable	CEMS
			Maximum emissions 400 ppmvd @ 3% O_2 (NESHAP)	Not applicable	CEMS
		Ammonia	Maximum emissions 5.0 ppmvd @ 0% O_2 (PSD)	Not applicable	CEMS

Process Unit	Emission Unit	Pollutant/ Parameter	Condition (Authority)	Testing	Monitoring/Recordkeeping
	Equipment Leaks				
		VOC, Organic HAP, H_2S	Leak detection and repair program (PSD, NESHAP)	Not applicable	Monitoring for leaks; recording of monitoring and repairs
Group "A" Storage Tanks					
	Storage Vessels				
		Equipment Design / Work Practice	Emissions routed to RFG system via a vapor compression system (PSD, NESHAP)	Not applicable	Monitor and record any emissions bypassed or diverted from the vapor compression system or RFG system, including the duration of the bypass and the reason why bypass was necessary
			Degassing and cleaning emissions controlled by liquid balancing, incineration, condensation, or other approved measure (PSD)	Not applicable	Maintain records of degassing equipment operation, including tank capacity; material stored; flow rate and VOC concentration of gases vented to degassing equipment; total amount of VOC processed in degassing equipment; control efficiency of degassing equipment; and degassing equipment operating parameters
	Equipment Leaks				
		VOC, Organic HAP, H_2S	Leak detection and repair program (PSD, NESHAP)	Not applicable	Monitoring for leaks; recording of monitoring and repairs
Group "B" Storage Tanks					
	Storage Vessels				

Process Unit	Emission Unit	Pollutant/ Parameter	Condition (Authority)	Testing	Monitoring/Recordkeeping
		Equipment Design / Work Practice	Vent stream routed to Tank Farm Thermal Oxidizer (PSD, NESHAP)	Not applicable	Monitor and record any vent stream flow that is bypassed or diverted from Tank Farm Thermal Oxidizer, including periods of planned routine maintenance performed on the control device
			Equipped with fixed roof and internal floating roof with a dual seal closure device (PSD)	Not applicable	Perform inspections and maintain records of inspection results
			Degassing and cleaning emissions controlled by liquid balancing, incineration, condensation, or other approved measure (PSD)	Not applicable	Maintain records of degassing equipment operation, including tank capacity; material stored; flow rate and VOC concentration of gases vented to degassing equipment; total amount of VOC processed in degassing equipment; control efficiency of degassing equipment; and degassing equipment operating parameters
	Tank Farm Thermal Oxidizer				
		Operating Limits	Fired with natural gas and RFG only (PSD)	Not applicable	Recording of fuels combusted
			Not applicable (State Rule)	Not applicable	Monitoring and recording of heat input rate
			Periods of downtime, due to planned routine maintenance, limited to 240 hours per year (NESHAP, PSD)	Not applicable	Maintain records of downtime due to planned routine maintenance, including the time and date of the beginning and end of each maintenance event

Process Unit	Emission Unit	Pollutant/ Parameter	Condition (Authority)	Testing	Monitoring/Recordkeeping
		VOC, Organic HAP	Reduce inlet emissions of total organic HAP by 95% or greater (NESHAP)	Not applicable	Prepare and maintain records of design evaluation; monitor and record combustion chamber temperature
			Minimum design destruction efficiency of 99.9% (PSD)	Not applicable	Prepare and maintain records of engineering design analysis
			Maximum flow rate corresponding to a minimum combustion chamber residence time of 0.75 seconds (PSD)	Not applicable	Monitor and record exhaust gas volumetric flow rate; prepare and maintain records of engineering design analysis
			Maintain minimum combustion chamber temperature of 1,600 ºF, five-minute average (PSD)	Not applicable	Prepare and maintain records of design evaluation; monitor and record combustion chamber temperature; perform annual inspections of the Tank Farm Thermal Oxidizer burner and combustion chamber temperature monitoring system
		PM_{10}	Maximum emissions 0.0075 lb/MMBtu (PSD)	Initial and annual tests using Methods 201 or 201A and Method 202	Not applicable
		NO_X	Maximum emissions 0.04 lb/MMBtu (PSD)	Not applicable	CEMS
		SO_2	Maximum H_2S in RFG 0.10 gr/dscf (NSPS)	Initial test using Method 6, 6C, 11, 15, 15A, or 16	SO_2 CEMS or fuel H_2S CEMS
			Maximum sulfur in auxiliary fuel 35 ppmv (PSD)	Not applicable	SO_2 CEMS, or fuel sulfur CEMS, or fuel H_2S CEMS plus grab sampling & analysis to determine ratio of H_2S to total sulfur

Process Unit	Emission Unit	Pollutant/ Parameter	Condition (Authority)	Testing	Monitoring/Recordkeeping
	Equipment Leaks				
		VOC, Organic HAP, H_2S	Leak detection and repair program (PSD, NESHAP)	Not applicable	Monitoring for leaks; recording of monitoring and repairs
Group "C" Storage Tanks					
	Storage Vessels				
		Equipment Design / Work Practice	Equipped with external floating roof with a dual seal closure device (PSD, NESHAP)	Not applicable	Perform inspections and maintain records of inspection results
			Degassing and cleaning emissions controlled by liquid balancing, incineration, condensation, or other approved measure (PSD)	Not applicable	Maintain records of degassing equipment operation, including tank capacity; material stored; flow rate and VOC concentration of gases vented to degassing equipment; total amount of VOC processed in degassing equipment; control efficiency of degassing equipment; and degassing equipment operating parameters
		Operating Limit	Maximum true vapor pressure of stored liquids 76.6 kPa (NESHAP)	Not applicable	Maintain records of vapor pressure of stored liquids
	Equipment Leaks				
		VOC, Organic HAP, H_2S	Leak detection and repair program (PSD, NESHAP)	Not applicable	Monitoring for leaks; recording of monitoring and repairs
Group "D" Storage Tanks					

Process Unit	Emission Unit	Pollutant/ Parameter	Condition (Authority)	Testing	Monitoring/Recordkeeping
	Storage Vessels				
		Operating Limit	Maintain minimum 204.9 kPa operating pressure (PSD, NESHAP)	Not applicable	Maintain records of operating pressure
	Equipment Leaks				
		VOC, Organic HAP, H_2S	Leak detection and repair program (PSD, NESHAP)	Not applicable	Monitoring for leaks; recording of monitoring and repairs
Group "E" Storage Tank					
	Storage Vessel				
		Equipment Design / Work Practice	Exhaust gases cooled to a temperature of 120 ºF or less and routed through a filter for particulate matter removal (PSD)	Not applicable	Monitor and record tank exhaust gas temperature at least once per week
			Not applicable	Not applicable	Maintain records of storage tank dimensions and capacity
		Visible Emissions	No visible emissions, except for one consecutive 15-minute period in any 24-hour period when the transfer lines are being blown for clearing (NSPS)	Initial test using Method 9	Conduct and maintain records of daily visible emissions observations using Method 9

Process Unit	Emission Unit	Pollutant/ Parameter	Condition (Authority)	Testing	Monitoring/Recordkeeping
		Operational Limit	Maintain true vapor pressure of stored liquids less than 3.5 kPa (NSPS)	Not applicable	Maintain records of the maximum true vapor pressure of stored liquids, types of liquids, and period of storage
Truck and Rail Car Loading Racks					
	Gasoline Product Truck and Rail Car Loading Racks				
		Equipment Design / Work Practice	Equipped with vapor collection and processing system (NESHAP)	Not applicable	Not applicable
			Loading only into cargo tanks using vapor collection equipment that is compatible with the loading rack vapor collection system (NESHAP)	Not applicable	Maintain records of cargo tanks loaded
			Loading only into vapor-tight cargo tanks (NESHAP)	Not applicable	Maintain records of cargo tanks loaded; obtain and maintain documentation of vapor tightness for each cargo tank loaded
			Maximum 460 mm H_2O gauge pressure in cargo tank during loading (PSD, NESHAP)	Initial test, using pressure measurement device	Continuous monitoring of system pressure
			Gases displaced from cargo tanks routed to regenerative adsorption system (PSD, NESHAP)	Not applicable	Not applicable

Process Unit	Emission Unit	Pollutant/ Parameter	Condition (Authority)	Testing	Monitoring/Recordkeeping
			Maintain regenerative adsorption system exhaust VOC concentration less than the concentration level established during the VOC performance test (PSD, NESHAP)	Not applicable	CEMS
			Exhaust from regenerative adsorption systems routed to thermal oxidizer (PSD)	Not applicable	Not applicable
		VOC	Maximum VOC in regenerative adsorption system exhaust 7.5 mg per liter of gasoline loaded (PSD, NESHAP)	Initial test using Methods 25A or 25B	Maintain records of test results
	Distillate Product Truck and Rail Car Loading Racks				
		Equipment Design / Work Practice	Equipped with vapor collection system (PSD)	Not applicable	Not applicable
			Loading only into cargo tanks using vapor collection equipment that is compatible with the loading rack vapor collection system (PSD)	Not applicable	Maintain records of cargo tanks loaded
			Maximum 460 mm H_2O gauge pressure in cargo tank during loading (PSD)	Not applicable	Continuous monitoring of system pressure

Process Unit	Emission Unit	Pollutant/ Parameter	Condition (Authority)	Testing	Monitoring/Recordkeeping
			Gases displaced from cargo tanks routed to thermal oxidizer (PSD)	Not applicable	Not applicable
	Truck and Rail Car Loading Rack Thermal Oxidizers				
		Operational Limits	Fired only with natural gas and RFG as auxiliary fuels (PSD)	Not applicable	Recording of fuels combusted
		Equipment Design / Work Practice	Maintain combustion chamber temperature at a level at least as high as the temperature established during the VOC performance test (PSD)	Not applicable	Continuously monitor and record combustion chamber temperature; perform annual inspections of the Thermal Oxidizer burners and combustion chamber temperature monitoring systems
			Maintain exhaust gas volumetric flow rate at or below the level that corresponds to a minimum residence time of 0.75 seconds (NESHAP, PSD)	Not applicable	Monitoring and recording of exhaust gas volumetric flow rate
		VOC	Maximum emissions 1.25 lb per million gallons loaded at the gasoline product loading racks plus 22.0 lb per million gallons loaded at the distillate product loading racks (PSD)	Initial test using Methods 25A or 25B	Maintain records of test results

Process Unit	Emission Unit	Pollutant/ Parameter	Condition (Authority)	Testing	Monitoring/Recordkeeping
		SO_2	Maximum H_2S in RFG 0.10 gr/dscf (NSPS)	Initial test using Method 6, 6C, 11, 15, 15A, or 16	SO_2 CEMS or fuel H_2S CEMS
			Maximum sulfur in auxiliary fuel 35 ppmv (PSD)	Not applicable	SO_2 CEMS, or fuel sulfur CEMS, or fuel H_2S CEMS plus grab sampling & analysis to determine ratio of H_2S to total sulfur
	Equipment Leaks				
		VOC, Organic HAP, H_2S	Leak detection and repair program (PSD, NESHAP)	Not applicable	Monitoring for leaks; recording of monitoring and repairs
Wastewater Treatment Plant					
	Wastewater Collection System (Drains)				
		Equipment Design / Work Practice	Equipped with leak-free covers on all openings (PSD, NESHAP)	Not applicable	Perform inspections; maintain records of inspections
			Either the junction box is equipped with water seal controls or a plug, or the vent stream is routed to either the Wastewater Treatment Plant Thermal Oxidizer or a dedicated dual carbon canister system (PSD, NESHAP)	Not applicable	If using water seal controls or a plug, perform inspections and maintain records of inspection results; if using thermal oxidizer, monitor and record any vent stream flow that is bypassed or diverted from thermal oxidizer; if using dedicated dual carbon canister system, continuously monitor exhaust stream for breakthrough
	Equalization Tank				

Process Unit	Emission Unit	Pollutant/ Parameter	Condition (Authority)	Testing	Monitoring/Recordkeeping
		Equipment Design / Work Practice	Equipped with a fixed roof and leak-free covers on all openings (PSD, NESHAP)	Not applicable	Perform inspections; maintain records of inspections
			Equipped with a closed-vent system, with the vent stream routed to Wastewater Treatment Plant Thermal Oxidizer (PSD, NESHAP)	Not applicable	Monitor and record any vent stream flow that is bypassed or diverted from thermal oxidizer
	Oil-Water Separator (API Separator)				
		Equipment Design / Work Practice	Equipped with a fixed roof and leak-free covers on all openings (PSD, NESHAP)	Not applicable	Perform inspections; maintain records of inspections
			Equipped with a closed-vent system, with the vent stream routed to Wastewater Treatment Plant Thermal Oxidizer (PSD, NESHAP)	Not applicable	Monitor and record any vent stream flow that is bypassed or diverted from thermal oxidizer
	Dissolved Air Flotation Unit				
		Equipment Design / Work Practice	Equipped with a fixed roof and leak-free covers on all openings (PSD, NESHAP)	Not applicable	Perform inspections; maintain records of inspections
			Equipped with a closed-vent system, with the vent stream routed to Wastewater Treatment Plant Thermal Oxidizer (PSD, NESHAP)	Not applicable	Monitor and record any vent stream flow that is bypassed or diverted from thermal oxidizer

Process Unit	Emission Unit	Pollutant/ Parameter	Condition (Authority)	Testing	Monitoring/Recordkeeping
	Biotreater				
		Equipment Design / Work Practice	Equipped with a fixed roof and leak-free covers on all openings (PSD, NESHAP)	Not applicable	Perform inspections; maintain records of inspections
			Equipped with a closed-vent system, with the vent stream routed to Wastewater Treatment Plant Thermal Oxidizer (PSD, NESHAP)	Not applicable	Monitor and record any vent stream flow that is bypassed or diverted from thermal oxidizer
	Containers				
		Equipment Design / Work Practice	Equipped with leak-free covers on all openings (PSD, NESHAP)	Not applicable	Perform inspections; maintain records of inspections
			Equipped with a submerged fill pipe (PSD, NESHAP)	Not applicable	Not applicable
	Waste Treatment Processes, Collectively				
		Benzene	Remove benzene from waste by 99%, mass basis, or to a concentration less than 10 ppmw (NESHAP, PSD)	Not applicable	Perform engineering calculations or measure benzene quantity in waste before and after treatment processes; maintain records of results
			Waste shall not be placed in a surface impoundment (PSD)	Not applicable	Not applicable
	Wastewater Treatment Plant Thermal Oxidizer				

Process Unit	Emission Unit	Pollutant/ Parameter	Condition (Authority)	Testing	Monitoring/Recordkeeping
		Operating Limits	Fired with natural gas and RFG only (PSD)	Not applicable	Recording of fuels combusted
			Minimum design destruction efficiency of 99.9% (PSD)	Not applicable	Prepare and maintain records of engineering design analysis
			Maximum flow rate corresponding to a minimum combustion chamber residence time of 0.75 seconds (PSD)	Not applicable	Monitor and record exhaust gas volumetric flow rate; prepare and maintain records of engineering design analysis
			Maintain minimum combustion chamber temperature of 1,600 ºF, five-minute average (PSD)	Not applicable	Monitor and record combustion chamber temperature; perform annual inspections of the Thermal Oxidizer burner and combustion chamber temperature monitoring system; prepare and maintain records of engineering design analysis
		SO_2	Maximum H_2S in RFG 0.10 gr/dscf (NSPS)	Initial test using Method 6, 6C, 11, 15, 15A, or 16	SO_2 CEMS or fuel H_2S CEMS
			Maximum sulfur in RFG 35 ppmv (PSD)	Not applicable	SO_2 CEMS, or fuel sulfur CEMS, or fuel H_2S CEMS plus grab sampling & analysis to determine ratio of H_2S to total sulfur
	Wastewater Treatment Plant Spray Dryer Heater				
		Operating Limits	Fired with natural gas and RFG only (PSD)	Not applicable	Recording of fuels combusted
			Maximum heat input 44 MMBtu/hr (PSD)	Not applicable	Monitoring and recording of heat input rate

Process Unit	Emission Unit	Pollutant/ Parameter	Condition (Authority)	Testing	Monitoring/Recordkeeping
		SO_2	Maximum H_2S in RFG 0.10 gr/dscf (NSPS)	Initial test using Method 6, 6C, 11, 15, 15A, or 16	CEMS
			Maximum sulfur in RFG 35 ppmv (PSD)	Not applicable	CEMS
		PM_{10}	Maximum emissions 0.0075 lb/MMBtu (PSD)	Initial and annual tests using Methods 201 or 201A and Method 202	Not applicable
		NO_X	Maximum emissions 0.030 lb/MMBtu (PSD)	Not applicable	CEMS
			Install, maintain, and operate low-NO_X burners (PSD)	Not applicable	Not applicable
		CO	Maximum emissions 0.04 lb/MMBtu (PSD)	Not applicable	CEMS
			Maximum emissions 400 ppmvd @ 3% O_2 (NESHAP)	Initial and annual tests using Methods 10, 10A, or 10B	Not applicable
	Wastewater Treatment Plant Spray Dryer Baghouse				
		Operating Limits	Maintain pressure drop within the range established in the CAM plan	Not applicable	Continuously monitor and record pressure drop
		Visible Emissions	Maximum opacity 5% (PSD, State Rule)	Not applicable	Perform monthly visible emissions observations using Method 9; maintain records of results

Process Unit	Emission Unit	Pollutant/ Parameter	Condition (Authority)	Testing	Monitoring/Recordkeeping
		PM	Maximum emissions 0.005 gr/dscf (PSD, State Rule)	Initial and annual tests using Method 5	Monitor and record pressure drop and other operating parameters identified in an approved CAM plan; perform monthly inspection of baghouse and baghouse pressure drop monitoring system in accordance with the manufacturer's recommended procedures
	Equipment Leaks				
		VOC, Organic HAP, H_2S	Leak detection and repair program (PSD, NESHAP)	Not applicable	Monitoring for leaks; recording of monitoring results
Emergency Flares					
	Emergency Flares				
		Operating Limits	Except during malfunctions, flares shall combust only pipeline-quality natural gas (PSD)	Not applicable	Continuously monitor and record the flow of pilot gas, purge gas, and other gases to each flare; for each flare event when gases other than pipeline-quality natural gas are combusted, identify and record the date and time of the flare event, submit notification to the Director, obtain a sample of the gases being combusted, and analyze the sample for heating value and sulfur content
		Equipment Design / Work Practice	Operated with pilot flame continuously present (PSD)	Not applicable	Continuously monitor and record presence of flame
			Designed and operated with steam assist (PSD)	Not applicable	Maintain record of flare system operation, maintenance, and monitoring plan

Process Unit	Emission Unit	Pollutant/ Parameter	Condition (Authority)	Testing	Monitoring/Recordkeeping
			Designed and operated with no visible emissions (PSD)	Not applicable	Perform visible emissions observation using Method 22 during each flare event; maintain records of observations
			Maximum exit velocity 60 ft/sec (PSD)	Not applicable	Maintain record of flare system operation, maintenance, and monitoring plan
			Natural gas purge employed so that the net heating value of gas being combusted is 300 Btu/scf or greater (PSD)	Not applicable	Maintain record of flare system operation, maintenance, and monitoring plan
Steam Boilers					
	Steam Boilers				
		Operating Limits	Fired with natural gas only (PSD)	Not applicable	Recording of fuels combusted
			Maximum heat input 419 MMBtu/hr (PSD)	Not applicable	Monitoring and recording of heat input rate
		NO_X	Maximum emissions 0.0125 lb/MMBtu (PSD)	Not applicable	CEMS
			Maximum emissions 0.20 lb/MMBtu at all times, including periods of startup, shutdown, and malfunction (NSPS)	Initial test using CEMS	CEMS

Process Unit	Emission Unit	Pollutant/ Parameter	Condition (Authority)	Testing	Monitoring/Recordkeeping
			Install, maintain, and operate low-NO_X burners and flue gas recirculation (PSD)	Not applicable	Not applicable
		CO	Maximum emissions 0.016 lb/MMBtu (PSD)	Not applicable	CEMS
			Maximum emissions 400 ppmvd @ 3% O_2 (NESHAP)	Not applicable	CEMS
Cooling Tower					
	Cooling Tower				
		Equipment Design / Work Practice	Equipped with high-efficiency drift eliminators guaranteed by the manufacturer for a maximum total liquid drift of 0.0005% (PSD)	Not applicable	Maintain records of vendor-guaranteed maximum total liquid drift
		Operating Limits	Maximum cooling water flow rate 80,000 gallons per minute (PSD)	Not applicable	Maintain records of cooling water pumping capacity
		Visible Emissions	Maximum opacity 20% (State Rule)	Not applicable	Not applicable

Process Unit	Emission Unit	Pollutant/ Parameter	Condition (Authority)	Testing	Monitoring/Recordkeeping
		PM	Maximum emissions 1.6 lb/hr (PSD, State Rule)	Not applicable	Maintain records of cooling water pumping capacity; maintain records of drift rate; perform monthly measurement of total dissolved solids and record results; perform monthly calculation of PM emissions and record results
	Heat Exchange System				
		VOC	Leak detection and repair program (PSD)	Not applicable	Monitoring for leaks; recording of monitoring results
Internal Combustion Engines					
	Emergency Generator				
		Operating Limits	Fired only with No. 2 Diesel fuel with a maximum sulfur content of 15 ppmw (PSD)	Not applicable	Maintain records of type of fuel combusted; maintain records of sulfur content and method of determination
			Maximum fuel usage 15,600 gallons per year, excluding operation during emergencies (PSD)	Not applicable	Maintain records of quantity of fuel combusted
			Maximum operation 50 hours per year, excluding operation during emergencies and during routine testing and maintenance	Not applicable	Maintain records of quantity of fuel combusted

Process Unit	Emission Unit	Pollutant/ Parameter	Condition (Authority)	Testing	Monitoring/Recordkeeping
			Routine operation prohibited during periods when visible emissions observation cannot be performed using Method 9, unless daily visible emissions observation has already been performed (PSD)	Not applicable	Maintain daily records of type and quantity of fuel combusted; maintain records of visible emissions observations
		Visible Emissions	Maximum opacity 40% (State Rule)	Not applicable	Daily visible emissions observations using Method 9 during non-emergency operations; maintain records of visible emissions observations
		Equipment Design / Work Practice	Maximum manufacturer-guaranteed NO_X plus nonmethane hydrocarbon emissions 6.4 grams per kilowatt-hour output (PSD)	Not applicable	Maintain records of manufacturer's emission performance guarantee; maintain records of manufacturer's instructions and recommendations relating to operation and maintenance; maintain records of all maintenance performed on the internal combustion engine
			Maximum manufacturer-guaranteed CO emissions 3.5 grams per kilowatt-hour output (PSD)	Not applicable	Maintain records of manufacturer's emission performance guarantee; maintain records of manufacturer's instructions and recommendations relating to operation and maintenance; maintain records of all maintenance performed on the internal combustion engine

Process Unit	Emission Unit	Pollutant/ Parameter	Condition (Authority)	Testing	Monitoring/Recordkeeping
			Maximum manufacturer-guaranteed PM emissions 0.2 grams per kilowatt-hour output (PSD)	Not applicable	Maintain records of manufacturer's emission performance guarantee; maintain records of manufacturer's instructions and recommendations relating to operation and maintenance; maintain records of all maintenance performed on the internal combustion engine
	Fire Water Pump Nos. 1 and 2				
		Operating Limits	Fired only with No. 2 Diesel fuel with a maximum sulfur content of 15 ppmw (PSD)	Not applicable	Maintain records of type of fuel combusted; maintain records of sulfur content and method of determination
			Maximum fuel usage in each engine 7,800 gallons per year, excluding operation during emergencies (PSD)	Not applicable	Maintain records of quantity of fuel combusted
			Maximum operation 50 hours per year, excluding operation during emergencies and during routine testing and maintenance	Not applicable	Maintain records of quantity of fuel combusted
			Routine operation prohibited during periods when visible emissions observation cannot be performed using Method 9, unless daily visible emissions observation has already been performed (PSD)	Not applicable	Maintain daily records of type and quantity of fuel combusted; maintain records of visible emissions observations

Process Unit	Emission Unit	Pollutant/ Parameter	Condition (Authority)	Testing	Monitoring/Recordkeeping
		Visible Emissions	Maximum opacity 20% (State Rule)	Not applicable	Daily visible emissions observations using Method 9 during non-emergency operations; maintain records of visible emissions observations
		Equipment Design / Work Practice	Maximum manufacturer-guaranteed NO_X plus nonmethane hydrocarbon emissions 4.0 grams per kilowatt-hour output (PSD)	Not applicable	Maintain records of manufacturer's emission performance guarantee; maintain records of manufacturer's instructions and recommendations relating to operation and maintenance; maintain records of all maintenance performed on the internal combustion engine
			Maximum manufacturer-guaranteed CO emissions 3.5 grams per kilowatt-hour output (PSD)	Not applicable	Maintain records of manufacturer's emission performance guarantee; maintain records of manufacturer's instructions and recommendations relating to operation and maintenance; maintain records of all maintenance performed on the internal combustion engine
			Maximum manufacturer-guaranteed PM emissions 0.2 grams per kilowatt-hour output (PSD)	Not applicable	Maintain records of manufacturer's emission performance guarantee; maintain records of manufacturer's instructions and recommendations relating to operation and maintenance; maintain records of all maintenance performed on the internal combustion engine
Fugitive Dust and Miscellaneous Other Sources					
	Open Areas, Dry Washes, and Riverbeds				

Process Unit	Emission Unit	Pollutant/ Parameter	Condition (Authority)	Testing	Monitoring/Recordkeeping
		Operating Limits	Implement reasonable dust control measures (State Rule)	Not applicable	Maintain records of approved fugitive dust control plan
	Roadways, Streets, and Parking Lots				
		Operating Limits	Implement reasonable dust control measures (State Rule)	Not applicable	Maintain records of approved fugitive dust control plan
			Pave all roadways, streets, and parking lots (BACT)	Not applicable	Not applicable
	Material Handling and Storage Piles				
		Operating Limits	Implement reasonable dust control measures (State Rules)	Not applicable	Maintain records of approved fugitive dust control plan
	Storage Piles				
		Operating Limits	Implement reasonable dust control measures (State Rule)	Not applicable	Maintain records of approved fugitive dust control plan
	Roadway/Site Cleaning Machinery				
		Operating Limits	Implement reasonable dust control measures (State Rule)	Not applicable	Not applicable
		Visible Emissions	Maximum opacity 40% (State Rule)	Not applicable	Not applicable
	Off-Road Machinery and Other Mobile Sources				
		Visible Emissions	Maximum opacity 40% (State Rule)	Not applicable	Not applicable

Process Unit	Emission Unit	Pollutant/ Parameter	Condition (Authority)	Testing	Monitoring/Recordkeeping
	Nonpoint sources				
		Visible Emissions	Maximum opacity 40% (State Rule)	Not applicable	Maintain records of approved fugitive dust control plan

A. Crude Unit (Attachment "B" Section I)

1. Fuel Use in the Process Heaters

The Crude Unit includes two process heaters: the Atmospheric Crude Charge Heater and the Vacuum Crude Charge Heater. The Permittee is restricted to using RFG and natural gas in the process heaters, consistent with the information provided in the permit application, and heat input is limited to the maximum rates indicated in the permit application. These restrictions are needed to ensure the enforceability of the representations made in the permit application, because these representations form the basis of all regulatory and technical analyses performed by the Department.

2. SO_2 Emissions from the Process Heaters

The process heaters are subject to limitations on fuel sulfur content, representing both BACT and applicable requirements under the NSPS (40 CFR 60 subpart J). The BACT and NSPS limits, respectively, are 35 ppmv sulfur (as H_2S) and 0.10 grains H_2S per dry standard cubic foot. The Permittee has two options for demonstrating compliance with these limitations: using a CEMS for SO_2 emissions as provided in Condition I.D.2 in Attachment "B" of the proposed permit or monitoring fuel sulfur content in accordance with Conditions XII.C.1 and XII.C.2 in Attachment "B" of the proposed permit. (The fuel sulfur content monitoring requirements are consolidated in Section XII of Attachment "B" of the proposed permit for administrative convenience.) If the fuel sulfur monitoring option is elected, the Permittee must demonstrate compliance with the NSPS limit by continuously monitoring fuel H_2S content and must demonstrate compliance with the BACT limit either by continuously monitoring fuel sulfur content or by periodically sampling and analyzing the fuel for total sulfur content and using these periodic data, in conjunction with the continuous H_2S monitoring data, to calculate fuel sulfur concentration.

The proposed permit includes SO_2 concentration levels that are deemed to be equivalent to the NSPS and BACT RFG sulfur concentration limits. Specifically, as provided by § 60.105(a)(3)(ii) of 40 CFR 60 subpart J, a stack gas SO_2 concentration level of 20 ppmv, dry basis, corrected to zero percent excess air, is deemed equivalent to the NSPS limit of 0.10 grains H_2S per dry standard cubic foot. A stack gas SO_2 concentration level of 4.3 ppmv, dry basis, corrected to zero percent excess air, is deemed equivalent to the BACT limit of 35 ppmv sulfur (as H_2S). If the Permittee chooses the SO_2 CEMS monitoring option for the NSPS and BACT RFG sulfur concentration limits, these SO_2 concentration levels will effectively become the applicable emission standards.

Each of the SO_2 concentration levels is established using an implicitly assumed ratio of 8.1 moles of stack gas (at zero percent excess air) per

mole of RFG. The U.S. EPA's rationale for establishing this relationship between RFG sulfur and stack gas SO_2 is documented in an October 2, 1990, Federal Register notice (55 FR 40171). This ratio is conservative when compared to typical, actual RFG characteristics. For instance, if the actual RFG heat value is 1,000 British Thermal Units per standard cubic foot (Btu/scf) and the actual RFG F-factor is 8,700 dry standard cubic foot per million British Thermal Unit (dscf/MMBtu), both of which are fairly typical, 4.3 ppmv stack gas SO_2 concentration would correspond to an RFG sulfur level of 37.4 ppmv.

3. NO_X Emissions from the Process Heaters

Each of the process heaters is required to use air pollution control equipment to control NO_X emissions, and each is subject to NO_X emission limits representing BACT. The Atmospheric Crude Charge Heater is required to use both SCR and low-NO_X burners; the Vacuum Crude Charge Heater is required to use low-NO_X burners.

Compliance with the NO_X BACT emission limits is required to be demonstrated using CEMS. Each of these CEMS is required to meet the performance and quality assurance requirements of 40 CFR part 60, appendices B and F.

4. CO Emissions from the Process Heaters

Each of the process heaters is subject to CO emission limits representing BACT. Compliance with these emission limits is required to be demonstrated using CEMS. Each of these CEMS is required to meet the performance and quality assurance requirements of 40 CFR part 60, appendices B and F.

5. PM_{10} Emissions from the Process Heaters

Each of the process heaters is subject to a PM_{10} emission limit representing BACT. Compliance with these emission limits is required to be demonstrated through initial and annual performance tests.

6. Organic HAP Emissions from the Process Heaters

Each of the process heaters is subject to work practice standards, expressed as CO emission limits, representing MACT for organic HAP emissions. Compliance with these emission limits is required to be demonstrated using CEMS.

7. Ammonia Emissions from the Atmospheric Crude Charge Heater

The Atmospheric Crude Charge Heater SCR system uses ammonia as a reagent and is subject to an ammonia emission limit representing BACT. Compliance with this emission limit is required to be demonstrated using

draft

CEMS. This CEMS is required to meet the quality assurance requirements of 40 CFR part 60, appendix F. There are no performance specifications for ammonia CEMS in appendix B to 40 CFR part 60, so the proposed permit requires that the Permittee include proposed performance specifications for this CEMS in the monitoring plan that must be submitted for the Director's approval.

8. Equipment in VOC, Organic HAP, and Hydrogen Sulfide Service

The piping components in the Crude Unit may include equipment in VOC, organic HAP, and hydrogen sulfide service. The requirements pertaining to this equipment are consolidated in Section XXIV of Attachment "B" of the proposed permit and are referenced in Condition I.B.8 of Attachment "B" of the proposed permit. These requirements are discussed in Section VI.X herein.

B. Gas Concentration Plant (Attachment "B" Section II)

1. NSPS Provisions for the Distillation Processes

The Gas Concentration Plant includes three distillation units: the De-Ethanizer Column, the Depropanizer Column, and the Debutanizer Column. The emission standards under 40 CFR 60 subpart NNN provide compliance options for these distillation units. The only permissible compliance option available to the Permittee is the routing of affected vent streams to process heaters, via the refinery fuel gas system, to reduce emissions of VOC (expressed as total organic compounds less methane and ethane) either by 98 percent or to an exhaust concentration of 20 ppmvd corrected to 3 percent oxygen. Other emission standards provided as compliance options are not permissible under the proposed refinery configuration. For example, routing the vent stream to a flare is an available compliance option under subpart NNN, but the flares at the proposed refinery are permitted to combust only emergency releases. Several provisions of subpart NNN pertaining to these unavailable compliance options have been omitted from the proposed permit to avoid the ambiguity that would result from their inclusion in the proposed permit.

The proposed permit, consistent with subpart NNN, requires performance testing to demonstrate compliance with the VOC emission limit. This testing requirement applies to each process heater used to comply with the VOC emission limit, except for any process heater having a heat input capacity of 150 MMBtu/hr or greater. In addition, the proposed permit requires monitoring to ensure that the vent streams are routed into the process heaters and to ensure that each process heater, into which vent streams are routed, is operating. For process heaters of less than 150 MMBtu/hr heat input capacity, subject to the testing requirement described above, the temperature of the flame zone must be monitored and must be maintained at or above the level established during the

performance test. Finally, the proposed permit provides for compliance with an alternative monitoring plan approved by the U.S. EPA, consistent with § 60.13 of 40 CFR 60 subpart A, in lieu of the monitoring procedures contained in the proposed permit.

2. Equipment in VOC, Organic HAP, and Hydrogen Sulfide Service

The piping components in the Gas Concentration Plant may include equipment in VOC, organic HAP, and hydrogen sulfide service. The requirements pertaining to this equipment are consolidated in Section XXIV of Attachment "B" of the proposed permit and are referenced in Condition II.B.2 of Attachment "B" of the proposed permit. These requirements are discussed in Section VI.X herein.

C. Hydrocracker Unit (Attachment "B" Section III)

1. Process Heaters

The Hydrocracker Unit includes two process heaters: the Hydrocracker Unit Charge Heater and the Hydrocracker Main Fractionator Heater. Each of these heaters is required to use low-NO_X burners to control NO_X emissions. Refer to Sections VI.A.1 through VI.A.6 herein for a discussion of the requirements relating to fuel use in, visible emissions from, and emissions of SO_2, NO_X, CO, and PM_{10} from the process heaters in the Hydrocracker Unit.

2. Equipment in VOC, Organic HAP, and Hydrogen Sulfide Service

The piping components in the Hydrocracker Unit may include equipment in VOC, organic HAP, and hydrogen sulfide service. The requirements pertaining to this equipment are consolidated in Section XXIV of Attachment "B" of the proposed permit and are referenced in Condition III.B.7 of Attachment "B" of the proposed permit. These requirements are discussed in Section VI.X herein.

D. Naphtha Hydrotreater Unit (Attachment "B" Section IV)

1. Process Heaters

The Naphtha Hydrotreater Unit includes one process heater: the Naphtha Hydrotreater Charge Heater. This heater is required to use low-NO_X burners to control NO_X emissions. Refer to Sections VI.A.1 through VI.A.6 herein for a discussion of the requirements relating to fuel use in, visible emissions from, and emissions of SO_2, NO_X, CO, and PM_{10} from the Naphtha Hydrotreater Charge Heater.

2. Equipment in VOC, Organic HAP, and Hydrogen Sulfide Service

The piping components in the Naphtha Hydrotreater Unit may include

equipment in VOC, organic HAP, and hydrogen sulfide service. The requirements pertaining to this equipment are consolidated in Section XXIV of Attachment "B" of the proposed permit and are referenced in Condition IV.B.7 of Attachment "B" of the proposed permit. These requirements are discussed in Section VI.X herein.

E. Catalytic Reforming Unit (Attachment "B" Section V)

1. NESHAP Provisions for the Catalyst Regenerator

The provisions of 40 CFR 63 subpart UUU that are applicable to catalytic reforming unit catalyst regenerators include emission standards both for organic HAPs and for inorganic HAPs. The control strategy to be used by the Permittee to comply with these emission standards consists of catalyst regenerator equipment design specifications and work practices in combination with the use of a caustic scrubber. Due to this proposed design configuration and control strategy, several of the compliance options provided by the regulation are not available to the Permittee. For example, routing the vent stream to a flare is an available compliance option for the organic HAP emission standards under subpart UUU, but the flares at the proposed refinery are permitted to combust only emergency releases, so the provisions relating to flares have been streamlined out of the proposed permit.

The applicable organic HAP emission standard under subpart UUU is expressed as a total organic compound (TOC) concentration level of 20 ppmv when the reactor vent pressure exceeds 5 psig. This emission standard also serves as the VOC BACT emission limit for this emission unit. The TOC concentration limit is included in Condition V.B.3.a(1) in Attachment "B" of the proposed permit.

The Permittee has indicated that the proposed catalyst regenerator equipment configuration and work practices would be sufficient to meet the TOC concentration limit even in the absence of the caustic scrubber. However, Subpart UUU also requires that the TOC concentration limit be met using a control device. Although the Permittee's proposed equipment configuration is such that the scrubber provides no quantifiable contribution toward compliance with the TOC concentration limit, this regulatory requirement is met due to the use of the caustic scrubber.

Subpart UUU does not provide operating limits or specific monitoring requirements that are adequate, for the Permittee's proposed equipment configuration, to provide assurance of continuous compliance with the organic HAP emission standard (i.e., the TOC concentration limit). For this reason, the Department is requiring that the Permittee maintain the ratio of perchloroethylene feed rate to catalyst circulation rate at a level equal to or lower than the level established during the initial performance test. In addition, Conditions V.D.5.a(1) and V.D.5.c require monitoring

draft

to demonstrate compliance with this work practice requirement.

The applicable inorganic HAP emission standard under subpart UUU includes two compliance options: a minimum required hydrogen chloride percent removal efficiency of 97 percent or a maximum allowable hydrogen chloride concentration level of 10 ppmvd, corrected to 3 percent oxygen. These compliance options are included in Condition V.B.3.b.1 in Attachment "B" of the proposed permit. The caustic scrubber work practice requirements from subpart UUU are included in Condition V.B.3.b(1) in Attachment "B" of the proposed permit.

Pursuant to subpart UUU and the NESHAP General Provisions, the proposed permit also includes a requirement to develop and implement a startup, shutdown, and malfunction plan and an operation, maintenance, and monitoring plan.

It should be noted that, at this time, the Department has neither requested nor been granted delegation of the U.S. EPA's authority to administer and enforce subpart UUU. Thus, citations of the authority for permit terms relating to subpart UUU are to 40 CFR part 63 rather than A.A.C. R18-2-1101. For this reason, all reporting requirements under subpart UUU are required to be submitted to both the Department and the U.S. EPA.

2. Catalyst Regenerator Visible Emissions

The Catalytic Reforming Unit Catalyst Regenerator is subject to A.A.C. R18-2-702(B) for visible emissions. The applicable 20 percent opacity limit is included in the proposed permit. Because only gaseous emissions are expected from the Catalyst Regenerator due to process design, compliance with the applicable opacity standard under this regulation is presumed under all operating conditions. Therefore, no monitoring is required.

3. Catalyst Regenerator NO_X Emissions

The catalyst regenerator is subject to a NO_X emission limit representing BACT. Compliance with this emission limit is required to be demonstrated by conducting initial and annual performance tests using EPA Reference Method 7 or 7E from appendix A to 40 CFR part 60.

4. Catalyst Regenerator CO Emissions

The catalyst regenerator is subject to a CO emission limit representing BACT. Compliance with this emission limit is required to be demonstrated by conducting initial and annual performance tests using EPA Reference Method 10 or 10 B from appendix A to 40 CFR part 60.

5. Process Heaters

The Catalytic Reforming Unit includes four process heaters: the Catalytic Reforming Unit Charge Heater, Catalytic Reforming Unit Interheater Nos. 1 and 2, and the Catalytic Reforming Unit Debutanizer Reboiler. The Debutanizer Reboiler is required to use low-NO_X burners to control NO_X emissions; the other three heaters are required to use low-NO_X burners and SCR to control NO_X emissions.

Refer to Sections VI.A.1 through VI.A.6 herein for a discussion of the requirements relating to fuel use in, visible emissions from, and emissions of SO_2, NO_X, CO, and PM_{10} from the process heaters in the Catalytic Reforming Unit. In addition, refer to Section VI.A.7 herein for a discussion of the requirements relating to emissions of ammonia from the heaters that are equipped with SCR (i.e., the Charge Heater and Interheater Nos. 1 and 2).

6. Equipment in VOC, Organic HAP, and Hydrogen Sulfide Service

The piping components in the Catalytic Reforming Unit may include equipment in VOC, organic HAP, and hydrogen sulfide service. The requirements pertaining to this equipment are consolidated in Section XXIV of Attachment "B" of the proposed permit and are referenced in Condition V.B.4 of Attachment "B" of the proposed permit. These requirements are discussed in Section VI.X herein.

F. Isomerization Unit (Attachment "B" Section VI)

The piping components in the Isomerization Unit may include equipment in VOC, organic HAP, and hydrogen sulfide service. The only requirements pertaining to this process unit are those for this equipment. These requirements are consolidated in Section XXIV of Attachment "B" of the proposed permit and are referenced in Condition VI.B of Attachment "B" of the proposed permit. These requirements are discussed in Section VI.X herein.

G. Distillate Hydrotreater Unit (Attachment "B" Section VII)

1. Process Heaters

The Distillate Hydrotreater Unit includes two process heaters: the Distillate Hydrotreater Charge Heater and the Distillate Hydrotreater Splitter Reboiler. Each of these heaters is required to use low-NO_X burners to control NO_X emissions. Refer to Sections VI.A.1 through VI.A.6 herein for a discussion of the requirements relating to fuel use in, visible emissions from, and emissions of SO_2, NO_X, CO, and PM_{10} from the process heaters in the Distillate Hydrotreater Unit.

2. Equipment in VOC, Organic HAP, and Hydrogen Sulfide Service

The piping components in the Distillate Hydrotreater Unit may include equipment in VOC, organic HAP, and hydrogen sulfide service. The

Draft

requirements pertaining to this equipment are consolidated in Section XXIV of Attachment "B" of the proposed permit and are referenced in Condition VII.B.7 of Attachment "B" of the proposed permit. These requirements are discussed in Section VI.X herein.

H. Butane Conversion Unit (Attachment "B" Section VIII)

1. NSPS Provisions for the Distillation Units

The Butane Conversion Unit includes two distillation units: the Isostripper Column and the Stabilizer Column. Refer to Section VI.B.1 herein for a discussion of the requirements relating to VOC emissions from these distillation units.

2. NSPS Provisions for the Reactor Processes

The Butane Conversion Unit includes three reactor processes: the Butamer Reactor, the Dehydrogenation Reactor, and the Catalytic Condensation Reactor. The emission standards under 40 CFR 60 subpart RRR provide compliance options for these reactor processes. The only permissible compliance option available to the Permittee is the routing of affected vent streams to process heaters, via the refinery fuel gas system, to reduce emissions of VOC (expressed as total organic compounds less methane and ethane) either by 98 percent or to an exhaust concentration of 20 ppmvd corrected to 3 percent oxygen. Other emission standards provided as compliance options are not permissible under the proposed refinery configuration. For example, routing the vent stream to a flare is an available compliance option under subpart RRR, but the flares at the proposed refinery are permitted to combust only emergency releases. Several provisions of subpart RRR pertaining to these unavailable compliance options have been omitted from the proposed permit to avoid the ambiguity that would result from their inclusion in the proposed permit. In light of the requirement for venting the reactor process vent streams to process heaters, via the refinery fuel gas system, the proposed permit, consistent with subpart RRR, does not require any performance testing to demonstrate compliance with the VOC emission limit. The only monitoring requirement is for monitoring of bypass piping that could divert the vent streams away from the process heaters.

3. Catalyst Regenerator Visible Emissions

The Butane Conversion Unit Catalyst Regenerator is subject to A.A.C. R18-2-702(B) for visible emissions. The applicable 20 percent opacity limit is included in the proposed permit. Because only gaseous emissions are expected from the Catalyst Regenerator due to process design, compliance with the applicable opacity standard under this regulation is presumed under all operating conditions. Therefore, no monitoring is required.

draft

4. Catalyst Regenerator NO_X Emissions

The catalyst regenerator is subject to a NO_X emission limit representing BACT. Compliance with this emission limit is required to be demonstrated by conducting initial and annual performance tests using EPA Reference Method 7 or 7E from appendix A to 40 CFR part 60.

5. Catalyst Regenerator CO Emissions

The catalyst regenerator is subject to a CO emission limit representing BACT. Compliance with this emission limit is required to be demonstrated by conducting initial and annual performance tests using EPA Reference Method 10 or 10 B from appendix A to 40 CFR part 60.

6. Process Heaters

The Butane Conversion Unit includes three process heaters: the Butane Conversion Unit Dehydrogenation Reactor Charge Heater, the Butane Conversion Unit Dehydrogenation Reactor Interheater, and the Butane Conversion Unit Isostripper Reboiler. The Isostripper Reboiler is required to use low-NO_X burners to control NO_X emissions; the other two heaters are required to use low-NO_X burners and SCR to control NO_X emissions.

Refer to Sections VI.A.1 through VI.A.6 herein for a discussion of the requirements relating to fuel use in, visible emissions from, and emissions of SO_2, NO_X, CO, and PM_{10} from the process heaters in the Butane Conversion Unit. In addition, refer to Section VI.A.7 herein for a discussion of the requirements relating to emissions of ammonia from the heaters that are equipped with SCR (i.e., the Dehydrogenation Reactor Charge Heater and the Dehydrogenation Reactor Interheater).

7. Equipment in VOC, Organic HAP, and Hydrogen Sulfide Service

The piping components in the Butane Conversion Unit may include equipment in VOC, organic HAP, and hydrogen sulfide service. The requirements pertaining to this equipment are consolidated in Section XXIV of Attachment "B" of the proposed permit and are referenced in Condition VIII.B.6 of Attachment "B" of the proposed permit. These requirements are discussed in Section VI.X herein.

I. Benzene Reduction Unit (Attachment "B" Section IX)

The piping components in the Benzene Reduction Unit may include equipment in VOC, organic HAP, and hydrogen sulfide service. The only requirements pertaining to this process unit are those for this equipment. These requirements are consolidated in Section XXIV of Attachment "B" of the proposed permit and are referenced in Condition IX.B of Attachment "B" of the proposed permit. These requirements are discussed in Section VI.X herein.

J. Delayed Coking Unit (Attachment "B" Section X)

1. Process Heaters

The Delayed Coking Unit includes two process heaters: Delayed Coking Unit Charge Heater Nos. 1 and 2. Each of these heaters is required to use low-NO_X burners to control NO_X emissions. Refer to Sections VI.A.1 through VI.A.6 herein for a discussion of the requirements relating to fuel use in, visible emissions from, and emissions of SO_2, NO_X, CO, and PM_{10} from the process heaters in the Delayed Coking Unit.

2. Equipment in VOC, Organic HAP, and Hydrogen Sulfide Service

The piping components in the Delayed Coking Unit may include equipment in VOC, organic HAP, and hydrogen sulfide service. The requirements pertaining to this equipment are consolidated in Section XXIV of Attachment "B" of the proposed permit and are referenced in Condition X.B.7 of Attachment "B" of the proposed permit. These requirements are discussed in Section VI.X herein.

K. Petroleum Coke Storage, Handling, and Loading (Attachment "B" Section XI)

1. Prohibition of Visible Emissions

The Permittee is required to conduct all coke handling operations in a manner such that there are no visible emissions across the property boundary. In addition, the proposed permit prohibits any visible emissions from the Coke Crusher, the Coke Conveyor, the Coke Silo, and the Coke Rail Car Loading operation. The proposed permit requires once-per-shift visible emissions observations to ensure compliance with these requirements.

2. Coke Moisture Content

The Permittee is required to maintain the coke moisture content at a level of at least 12 percent by weight in order to minimize fugitive particulate matter emissions from coke handling operations. The proposed permit requires daily sampling and analysis of coke from five specified locations to ensure compliance with this requirement.

3. Coke Pit and Coke Pad Equipment Design

The proposed permit restricts the size of the Coke Pit and Coke Pad to a maximum combined surface area of 48,000 square feet. The proposed permit also requires that the Coke Pit and Coke Pad be maintained within a completely walled enclosure and that all coke handling operations be conducted in a manner such that all operations occur at least five feet

draft

below the lowest point on the top of the walled enclosure. The proposed permit requires once-per-shift recording of the height of coke piles to ensure compliance with this requirement.

4. Coke Crusher Equipment Design

The Coke Crusher handles wet material that crushes readily and is not expected to have any fugitive emissions under most operating conditions. Nonetheless, the proposed permit requires that the crusher be located within the walled enclosure around the Coke Pit and Coke Pad. The proposed permit further requires that the Coke Crusher be designed and maintained with a partial enclosure (i.e., sides and a top) to prevent the coke from being entrained by wind under windy conditions.

5. Coke Conveyor Equipment Design

The proposed permit allows the use of only one Coke Conveyor, extending from the Coke Crusher to the Coke Silo. This Coke Conveyor handles wet material and is not expected to have any fugitive emissions under most operating conditions. Nonetheless, the proposed permit requires that the conveyor be fully enclosed, with only two transfer points.

6. Coke Silo

The proposed permit requires that the Coke Silo be fully enclosed and equipped with a baghouse. The Coke Silo Baghouse is subject to a PM_{10} emission limit of 0.005 gr/dscf representing BACT. Compliance with this emission limit is required to be demonstrated through initial and annual performance tests.

7. Coke Rail Car Loading

The proposed permit requires that the Coke Rail Car Loading operation be conducted within an enclosure and that the enclosure be equipped with overlapping flaps or sliding doors on the openings through which rail cars enter and exit the enclosure. The proposed permit further requires that the loading operation be conducted using a telescoping chute to ensure that the height of the coke drop does not exceed four feet.

L. Amine Regeneration Unit (Attachment "B" Section XII)

1. Provisions for Minimizing Excess SO_2 Emissions

The Amine Regeneration Unit serves to regenerate "rich" amine solution (i.e., amine solution with a high level of sulfur) by removing sulfur compounds to produce "lean" amine solution. The lean amine solution is returned to the amine contactors that are used to remove hydrogen sulfide and other reduced sulfur compounds from RFG streams. The rich

amine solution exiting the amine absorbers is recycled to the Amine Regeneration Unit, beginning the cycle again. The "sour gas" (i.e., hydrogen sulfide-rich gas) exiting the Amine Regeneration Unit is routed to the Sulfur Recovery Plant as feed material.

The ability of the amine absorbers to remove sulfur from RFG is limited by the supply of lean amine solution and by the availability of an outlet for rich amine solution. The outlet for rich amine solution is normally the Amine Regeneration Unit but, in the event of an upset or malfunction, the Rich Amine Tank serves as the outlet.

Some of the refinery processes that produce RFG streams cannot be safely shut down in a short period of time. There is no safe alternative to combusting these streams. In the event of an upset or malfunction that renders one or more amine absorbers inoperable, the removal of sulfur from the RFG streams will be diminished, and excess SO_2 emissions from RFG combustion devices are likely. Similarly, in the event of an upset or malfunction of the Sulfur Recovery Plant, the sour gas exiting the Amine Regeneration Unit must be combusted in a flare or thermal oxidizer.

The proposed permit imposes equipment design and work practice requirements that will minimize the excess SO_2 emissions that could occur as a result of upset or malfunction. Specifically, the proposed permit requires that rich amine shall be re-routed to the Rich Amine Tank and acid gas flaring shall be ceased within fifteen minutes after the start of the acid gas flaring or other upset that results in excess emissions. In addition, the proposed permit requires that the Permittee maintain a full day's supply of lean amine solution (210,000 gallons) and a full day's available storage capacity for rich amine solution (210,000 gallons). Taken together, these requirements will allow the amine absorbers to function properly for a period of at least 24 hours in the event of an upset at the Amine Regeneration Unit or the Sulfur Recovery Plant. During that period, the sulfur that would otherwise be emitted as excess SO_2 emissions from the RFG combustion devices, the thermal oxidizer, or the emergency flare is instead stored in rich amine solution being temporarily accumulated in the Rich Amine Tank.

The proposed permit includes terms requiring that records of amine solution throughput be maintained, that the available supply of lean amine solution be at least a specified amount, and that the available rich amine storage capacity be at least the same specified amount. Taken together, these terms will allow the Permittee to demonstrate compliance with the requirements for a full day's supply of lean amine solution and a full day's available storage capacity for rich amine solution.

In the event that the upset cannot be resolved before the available storage capacity for rich amine solution is exhausted, the proposed permit includes a requirement that production at upstream process units be

curtailed in order to minimize excess SO_2 emissions.

2. Monitoring Provisions for RFG Sulfur Content

As noted in Section VI.A.2 herein, all RFG-fired process heaters are subject to limitations on fuel sulfur content, representing both BACT and applicable requirements under the NSPS (40 CFR 60 subpart J). In lieu of using SO_2 CEMS to demonstrate compliance with these limitations, the Permittee has the option of monitoring fuel sulfur content. These optional fuel sulfur content monitoring requirements are consolidated in Section XII of Attachment "B" of the proposed permit. This is done for administrative convenience, because the amine contactors associated with the Amine Regeneration Unit are the primary means of removing sulfur compounds from the RFG prior to combustion.

3. NESHAP Provisions for the Rich Amine Three Phase Separator

The vent stream from the Rich Amine Three Phase Separator is subject to the requirements for miscellaneous process vents under 40 CFR 63 subpart CC. These requirements are included in the proposed permit. The Permittee is required to comply by routing the vent stream to the Sulfur Recovery Plant Thermal Oxidizer for control of VOC emissions. The proposed permit also includes testing, monitoring, and recordkeeping provisions consistent with subpart CC, including monitoring of bypass lines that could divert the vent stream away from the Thermal Oxidizer. Requirements specific to the operation of the Thermal Oxidizer are contained in Section XIV of Attachment "B" of the proposed permit and are discussed in Section VI.N.3 herein.

4. Rich Amine and Lean Amine Tanks

As noted in Section IV.C.8 herein, the rich amine and lean amine tanks are classified as Group 2 Storage Vessels under 40 CFR 63 subpart CC, due to the low vapor pressure of the materials that are proposed to be stored in these tanks. The proposed permit includes the subpart CC requirement, applicable to all Group 2 Storage Vessels, for maintaining records of tank dimensions and capacity. In addition, the proposed permit includes a limit of 3.4 kPa on the maximum true vapor pressure of materials stored in the rich amine and lean amine tanks, and a requirement to maintain records of the true vapor pressure of the materials stored in these tanks. These requirements are designed to ensure that the non-applicability of the more stringent requirements for Group 1 Storage Vessels under subpart CC is maintained continuously.

5. Equipment in VOC, Organic HAP, and Hydrogen Sulfide Service

The piping components in the Amine Regeneration Unit may include equipment in VOC, organic HAP, and hydrogen sulfide service. The requirements pertaining to this equipment are consolidated in Section

XXIV of Attachment "B" of the proposed permit and are referenced in Condition XII.B.2 of Attachment "B" of the proposed permit. These requirements are discussed in Section VI.X herein.

M. Sour Water Stripper (Attachment "B" Section XIII)

1. Provisions for Minimizing Excess SO_2 Emissions

The Sour Water Stripper serves to remove sulfur compounds and other contaminants from refinery process wastewater. Some of the refinery processes that produce sour water streams cannot be safely shut down in a short period of time. In the event of an upset or malfunction of the Sulfur Recovery Plant, sour gas exiting the Sour Water Stripper must be combusted in a flare or thermal oxidizer.

The proposed permit imposes equipment design requirements that will minimize the excess SO_2 emissions that could occur as a result of upset or malfunction. Specifically, the proposed permit requires that sour water shall be re-routed to the Sour Water Tank and acid gas flaring shall be ceased within fifteen minutes after the start of the acid gas flaring or other upset that results in excess emissions. In addition, the proposed permit requires that the Permittee maintain a full day's available storage capacity for sour water (3.78 million gallons). Taken together, these requirements will allow the refinery to operate for a period of at least 24 hours in the event of an upset at the Sulfur Recovery Plant. During that period, the sulfur that would otherwise be emitted as excess SO_2 emissions from the thermal oxidizer or the emergency flare is instead stored in sour water being temporarily accumulated in the Sour Water Tank.

The proposed permit includes conditions requiring that records of sour water throughput be maintained and that the available sour water storage capacity be at least a specified amount. Taken together, these terms will allow the Permittee to demonstrate compliance with the requirement for a full day's available storage capacity for sour water.

In the event that the upset cannot be resolved before the available storage capacity for sour water is exhausted, the proposed permit includes a requirement that production at upstream process units be curtailed in order to minimize excess SO_2 emissions.

2. NESHAP Provisions for the Sour Water Flash Drum

The vent stream from the Sour Water Flash Drum is subject to the requirements for miscellaneous process vents under 40 CFR 63 subpart CC. These requirements are included in the proposed permit. The Permittee is required to comply by routing the vent stream to the Sulfur Recovery Plant Thermal Oxidizer for control of VOC emissions. The proposed permit also includes testing, monitoring, and recordkeeping provisions consistent with subpart CC, including monitoring of bypass

lines that could divert the vent stream away from the Thermal Oxidizer. Requirements specific to the operation of the Thermal Oxidizer are contained in Section XIV of Attachment "B" of the proposed permit and are discussed in Section VI.N.3 herein.

3. NSPS Provisions for Sour Water Tank

As noted in Section IV.B.7 herein, the Sour Water Tank is subject to the provisions of 40 CFR 60 subpart Kb. The Permittee has elected to comply with subpart Kb using a fixed roof in combination with an internal floating roof. This compliance option is available because the maximum true vapor pressure of the materials proposed to be stored in this tank is less than 76.6 kPa. The proposed permit includes the subpart Kb requirements for the chosen compliance option, including the use of a dual seal closure device; performing and maintaining records of floating roof inspections; maintaining records of tank dimensions and capacity; and maintaining records of the maximum true vapor pressure of materials stored in the tank. In addition, the proposed permit includes a limit of 76.6 kPa on the maximum true vapor pressure of materials stored in the tank. This requirement is designed to ensure that the more stringent requirements under subpart Kb, applicable to tanks storing highly volatile materials, are not applicable to the Sour Water Tank.

4. H_2S Emission Standard for Sour Water Tank

In addition to the NSPS requirements pertaining to the use of an internal floating roof, the Sour Water Tank is also required to be equipped with a dual-canister carbon adsorption system representing BACT for emissions of H_2S. In addition, the Permittee is required to perform continuous monitoring of the exhaust stream for breakthrough.

5. Equipment in VOC, Organic HAP, and Hydrogen Sulfide Service

The piping components in the Sour Water Stripper may include equipment in VOC, organic HAP, and hydrogen sulfide service. The requirements pertaining to this equipment are consolidated in Section XXIV of Attachment "B" of the proposed permit and are referenced in Condition XIII.B.3 of Attachment "B" of the proposed permit. These requirements are discussed in Section VI.X herein.

N. Sulfur Recovery Plant (Attachment "B" Section XIV)

1. NSPS and NESHAP Provisions for SO_2 Emissions from the Thermal Oxidizer

The emission standards under 40 CFR 60 subpart J and 40 CFR 63 subpart UUU are essentially identical. Each of these regulations provides several compliance options. The only permissible compliance option available to the Permittee is to meet the exhaust gas SO_2 concentration

standard of 250 ppmvd, corrected to 0.0 percent oxygen, using a TGTU and a thermal oxidizer. Other emission standards provided as compliance options in subpart J and subpart UUU are not permissible under the proposed refinery configuration. Several provisions of subpart J and subpart UUU pertaining to these unavailable compliance options have been streamlined out of the proposed permit.

The proposed permit requires use of an SO_2 CEMS, including an oxygen monitor, to demonstrate compliance with the SO_2 emission limit. There is a minor discrepancy between the monitoring provisions of subpart J and subpart UUU. Under § 60.105(a)(5)(i) of subpart J, the oxygen monitor span value is specified as 25 percent oxygen (O_2). (Prior to a regulatory revision promulgated on October 17, 2000, this value was specified as 10 percent O_2.) Under § 63.1572(a)(1) of subpart UUU, promulgated on April 11, 2002, the span value for the same instrument is specified as 10 percent O_2. The Department has used its discretion in specifying a span value of 10 percent O_2 for the oxygen monitor.

It should be noted that the Department has neither requested nor been granted delegation of the U.S. EPA's authority to administer and enforce subpart UUU. Thus, citations of the authority for permit terms relating to subpart UUU are to 40 CFR part 63 rather than A.A.C. R18-2-1101. For this reason, all reporting requirements under subpart UUU are required to be submitted to both the Department and the U.S. EPA.

2. BACT Emission Limits for SO_2 and Reduced Sulfur Compounds from the Thermal Oxidizer

The BACT emission limits for SO_2 and reduced sulfur compound emissions from the Sulfur Recovery Plant Thermal Oxidizer are included in Conditions XIV.B.2.b and XIV.B.4.a, respectively, in Attachment "B" of the proposed permit. The SO_2 BACT emission limit is expressed in lb/hr, based on a rolling one-hour averaging time. Although this emission limit is expected to be much more stringent than the NSPS SO_2 emission limit, described above, the NSPS limit has not been streamlined out of the proposed permit because it is possible that it could be more stringent under some operating conditions. The proposed permit requires use of an SO_2 CEMS, including an oxygen monitor, to demonstrate compliance with the SO_2 BACT emission limit.

As described in detail in Section V.C.2 herein, the BACT emission limit for reduced sulfur compounds covers three separate PSD-regulated pollutants that are practically equivalent for petroleum refinery sulfur recovery plants. The BACT emission limit for reduced sulfur compounds, as defined in Condition XIV.B.4.b in Attachment "B" of the proposed permit, is expressed in terms of total emissions of the three compounds that are expected to account for nearly all reduced sulfur compounds emissions from the thermal oxidizer: hydrogen sulfide, carbonyl sulfide, and carbon disulfide.

3. BACT and NESHAP Provisions for VOC Emissions from the Thermal Oxidizer

As noted in Sections VI.L.3 and VI.M.2 herein, respectively, the proposed permit requires that the vent streams from the Rich Amine Three Phase Separator and the Sour Water Flash Drum be routed to the Sulfur Recovery Plant Thermal Oxidizer in order to comply with the requirements for miscellaneous process vents under 40 CFR 63 subpart CC. The subpart CC requirements for the Thermal Oxidizer are included in Section XIV of Attachment "B" of the proposed permit. The VOC emission standard requires that the Thermal Oxidizer reduce emissions of VOC (expressed as total organic compounds less methane and ethane) either by 98 percent or to an exhaust concentration of 20 ppmvd corrected to 3 percent oxygen, whichever is less stringent. The proposed permit, consistent with subpart CC, also includes requirements for conducting an initial performance test to demonstrate compliance with the VOC emission standard and to establish a minimum Thermal Oxidizer combustion chamber temperature. In order to satisfy BACT requirements, the proposed permit also includes requirements for maintaining the Thermal Oxidizer exhaust gas volumetric flow rate at or below the level that corresponds to a minimum combustion chamber residence time of 0.75 seconds. Finally, the proposed permit includes monitoring and recordkeeping requirements to ensure compliance with the minimum combustion chamber temperature requirement.

4. Thermal Oxidizer NO_X Emissions

The Sulfur Recovery Plant Thermal Oxidizer is required to use low-NO_X burners to control NO_X emissions and is subject to a NO_X BACT emission limit of 0.06 lb/MMBtu. With the exception of the unit-specific BACT emission limit, the proposed permit conditions, including monitoring, recordkeeping, reporting, and testing requirements, are consistent with those contained in other sections of the proposed permit involving RFG combustion units. See Section VI.A of this document for a more detailed discussion of the proposed permit conditions relating to NO_X emissions from combustion sources.

5. Thermal Oxidizer CO Emissions

The Sulfur Recovery Plant Thermal Oxidizer must be designed and operated to achieve stringent NESHAP and BACT limitations and standards for VOC and organic HAPs as required in the proposed permit. Based on this, it can be assumed that the oxidizer will operate with inherently complete combustion and minimal CO emissions. The proposed permit does not contain specific CO emission limitations or standards for the Sulfur Recovery Plant Thermal Oxidizer. The design and operational requirements for VOC and HAP control and associated monitoring, recordkeeping, and reporting provisions were deemed

draft

sufficient for the purpose of minimizing CO emissions.

6. Sulfur Pits

Consistent with the BACT determination for hydrogen sulfide emissions, as discussed in Section V.D herein, the proposed permit requires that the exhaust gases from Sulfur Pit Nos. 1 and 2 and routed to the inlet of either Sulfur Recovery Unit No. 1 or Sulfur Recovery Unit No. 2.

7. MDEA Tank

As noted in Section IV.C.8 herein, the MDEA Tank is classified as a Group 2 Storage Vessel under 40 CFR 63 subpart CC, due to the low vapor pressure of the materials that are proposed to be stored in this tank. The proposed permit includes the subpart CC requirement, applicable to all Group 2 Storage Vessels, for maintaining records of tank dimensions and capacity. In addition, the proposed permit includes a limit of 3.4 kPa on the maximum true vapor pressure of materials stored in the MDEA Tank, and a requirement to maintain records of the true vapor pressure of the materials stored in this tank. These requirements are designed to ensure that the non-applicability of the more stringent requirements for Group 1 Storage Vessels under subpart CC is maintained continuously.

8. Sulfur Product Truck and Rail Car Loading Racks

Consistent with the BACT determination for hydrogen sulfide emissions, as discussed in Section V.E herein, the proposed permit requires that the liquid sulfur be degassed to a maximum hydrogen sulfide concentration of 15 ppmw before being loaded into trucks or rail cars. The proposed permit includes requirements for daily sampling and analysis of the H_2S content in the sulfur stored in the sulfur pits to determine compliance with this limitation.

9. Equipment in VOC, Organic HAP, and Hydrogen Sulfide Service

The piping components in the Sulfur Recovery Unit may include equipment in VOC, organic HAP, and hydrogen sulfide service. The requirements pertaining to this equipment are consolidated in Section XXIV of Attachment "B" of the proposed permit and are referenced in Condition XIV.B.8 of Attachment "B" of the proposed permit. These requirements are discussed in Section VI.X herein.

O. Hydrogen Plant (Attachment "B" Section XV)

1. Process Heater

The Hydrogen Plant includes one process heater: the Hydrogen Reformer Heater. This heater is required to use low-NO_X burners and SCR to control NO_X emissions. Refer to Sections VI.A.1 through VI.A.7 herein

for a discussion of the requirements relating to fuel use in, visible emissions from, and emissions of SO_2, NO_X, CO, PM_{10}, and ammonia from the Hydrogen Reformer Heater.

2. Equipment in VOC, Organic HAP, and Hydrogen Sulfide Service

The piping components in the Hydrogen Plant may include equipment in VOC, organic HAP, and hydrogen sulfide service. The requirements pertaining to this equipment are consolidated in Section XXIV of Attachment "B" of the proposed permit and are referenced in Condition XV.B.8 of Attachment "B" of the proposed permit. These requirements are discussed in Section VI.X herein.

P. Group "A" Storage Tanks (Attachment "B" Section XVI)

1. VOC and HAP Provisions

Group "A" Storage Tanks, which consist of eight dome-roof storage vessels with emissions routed to the RFG system, are subject to BACT requirements for VOC emissions and to the petroleum refinery NESHAP [40 CFR 63.646; §§ 63.119 - 63.121, by reference] for HAP emissions. The applicable provisions of § 63.119(f) of 40 CFR part 63 were incorporated into the proposed permit. BACT requirements are noted by citation. See Section V.F of this document for information on the BACT analysis for the storage tanks.

Pursuant to A.A.C. R18-2-406(A)(4) [BACT] and NESHAP requirements for new sources [40 CFR 63.646; § 63.119(f), by reference], vapors from all Group "A" Storage Tanks must be collected in a closed-vent hard pipe system and routed to a vapor compression system. Gases collected in the vapor compression system must be introduced into the RFG system. The conditions in Section XVI.B of Attachment "B" of the proposed permit closely follow the regulatory provisions of 40 CFR 63.119(f).

Monitoring, recordkeeping, and reporting conditions are consistent with the requirements of 40 CFR 63.654 and 40 CFR 63.123, by reference, as applicable. No specific testing requirements apply. However, the test methods contained in 40 CFR 63 Subpart CC do apply.

Finally, the proposed permit includes requirements for tank degassing and cleaning, consistent with the BACT determination for storage tank VOC emissions as discussed in Section V.F.1 herein. These include a requirement to control degassing emissions using liquid balancing, incineration, condensation, or another control method subject to prior approval by the Director. The recordkeeping requirements in the proposed permit, pertaining to tank degassing and cleaning operations, include requirements for maintaining records of tank identification and capacity; records of the material stored; records of the flow rate and VOC concentration of gases vented to the degassing equipment; records of the

total amount of VOC processed in the degassing equipment; records of the control efficiency of the degassing equipment; and records of the degassing equipment operating parameters, specific to the type of degassing equipment being used.

2. Equipment in VOC and Organic HAP Service

The piping components associated with the Group "A" Storage Tanks may include equipment in VOC and organic HAP service. The requirements pertaining to this equipment are consolidated in Section XXIV of Attachment "B" of the proposed permit and are referenced in Condition XVI.B.10 of Attachment "B" of the proposed permit. These requirements are discussed in Section VI.X herein.

Q. Group "B" Storage Tanks (Attachment "B" Section XVII)

1. VOC and HAP Provisions

Group "B" Storage Tanks, which consist of 27 fixed roof storage vessels equipped with fixed and internal floating roofs and controlled by the Tank Farm Thermal Oxidizer, are subject to BACT requirements for VOC emissions and to the petroleum refinery NESHAP [40 CFR 63.646; §§ 63.119 - 63.121, by reference] for HAP emissions. The applicable provisions of § 63.119(e) of 40 CFR part 63 were incorporated into the proposed permit. Additional and more stringent requirements apply to the Thermal Oxidizer for the purpose of BACT, as noted by citation. See Section V.F of this document for information on the BACT analysis for the storage tanks.

Pursuant to A.A.C. R18-2-406(A)(4) [BACT] and NESHAP requirements for new sources [40 CFR 63.646; § 63.119(e) by reference], all Group "B" storage tanks must be equipped with an internal floating roof and head space emissions must be collected in a closed-vent system and routed to the Tank Farm Thermal Oxidizer. The conditions in Section XVI.B of Attachment "B" of the proposed permit incorporate the regulatory provisions of 40 CFR 63.119(e). Additionally, the provisions of 40 CFR 63.119(b), (HON for storage vessels - reference control technology: fixed roof tank with internal floating roof) were incorporated for the purpose of BACT for VOC emissions. For the Tank Farm Thermal Oxidizer, VOC BACT emission limitations are design standards and operational requirements including minimum design VOC destruction efficiency ($99.9 percent), minimum combustion chamber temperature ($1600 EF), and maximum exhaust gas volumetric flow rate corresponding to a minimum residence time ($0.75 second).

Monitoring, recordkeeping, and reporting conditions include the compliance determination procedures of 40 CFR 63.120(d) and additional specific BACT monitoring requirements for the Tank Farm Thermal Oxidizer. In addition to the Thermal Oxidizer design evaluation and

monitoring plan required under 40 CFR 63.120(d), the Tank Farm Thermal Oxidizer must be equipped with a continuous combustion chamber temperature monitoring system. Excess emissions for the purpose of BACT are defined as each 5-minute block during which the thermal oxidizer combustion chamber outlet temperature falls below the required minimum or the exhaust gas volumetric flow rate exceeds the specified maximum. An annual inspection of the thermal oxidizer burner and temperature monitoring system is also required.

Because the VOC BACT emission limits/standards for the Tank Farm Thermal Oxidizer are expressed in terms of control device design/operation parameters (temperature and flow rate), and continuous monitoring of these parameters is specified as a proposed permit condition, CAM requirements are not applicable per the exemption provided in 40 CFR 64.4(b)(vi).

The petroleum refinery NESHAP (40 CFR 63 subpart CC) allows for up to 240 hours per year of scheduled maintenance downtime, during which the Thermal Oxidizer is not required to achieve 95 percent HAP control efficiency. The same variance allowance is provided in the proposed permit for the purpose of VOC BACT. This is justified because, for the tank farm operations, control device maintenance cannot be performed during scheduled equipment outages.

NESHAP recordkeeping and reporting conditions are consistent with the requirements of 40 CFR 63.654(f), (g), and (h) and 40 CFR 63.123, by reference in 40 CFR 63.654(i), as applicable. No specific testing requirements apply. However, the test methods contained in 40 CFR 63 Subpart CC do apply.

Finally, the proposed permit includes requirements for tank degassing and cleaning, consistent with the BACT determination for storage tank VOC emissions as discussed in Section V.F.1 herein. These include a requirement to control degassing emissions using liquid balancing, incineration, condensation, or another control method subject to prior approval by the Director. The recordkeeping requirements in the proposed permit, pertaining to tank degassing and cleaning operations, include requirements for maintaining records of tank identification and capacity; records of the material stored; records of the flow rate and VOC concentration of gases vented to the degassing equipment; records of the total amount of VOC processed in the degassing equipment; records of the control efficiency of the degassing equipment; and records of the degassing equipment operating parameters, specific to the type of degassing equipment being used.

2. Thermal Oxidizer Operational Limitations

The Permittee is restricted to using RFG and natural gas in the Tank Farm Thermal Oxidizer, consistent with the information provided in the permit

application. This restriction is necessary to ensure the enforceability of the representations made in the permit application, because these representations form the basis of all regulatory and technical analyses performed by the Department.

The proposed permit does not include any enforceable limitation on the heat input to the Tank Farm Thermal Oxidizer. The sole function of the thermal oxidizer is to control emissions of VOC and organic HAPs; the Permittee has no economic incentive to operate the device at a heat input rate that is higher than necessary to achieve adequate control efficiency. A heat input limit would generally provide disincentive to the Permittee to operate the thermal oxidizer at higher control efficiencies. The emissions of VOC and organic HAP due to insufficient temperature in the thermal oxidizer are substantial; the emissions of combustion-generated pollutants are relatively small. The Department evaluated whether a heat input limit is appropriate and determined that the only possible benefit would be improved tracking of PM_{10} emissions. (Tracking the emissions of other combustion-generated pollutants would be unaffected. Emissions of SO_2 and NO_X are subject to continuous monitoring, and emissions of VOC and CO are inversely related to the thermal oxidizer heat input rate.)

The Department concluded that this benefit is significantly outweighed by the potentially greater adverse environmental impacts that would result. Also, it is unlikely that the heat input will exceed the 53 MMBtu/hr rate that was indicated in the permit application. This value is based on an engineering design evaluation of the heat requirements for maintaining the required thermal oxidizer combustion chamber temperature, assuming a gas flow that reflects the simultaneous maximum rate of displacement from all Group "B" Storage Tanks. This is a conservative method of estimating required heat input rate to the thermal oxidizer.

3. Thermal Oxidizer SO_2 Emissions

The Tank Farm Thermal Oxidizer is subject to NSPS (40 CFR 60 subpart J) and BACT requirements for SO_2 emissions. The proposed permit conditions, including emission limits and standards, monitoring, recordkeeping, reporting, and testing requirements, are consistent with those contained in other sections of the proposed permit involving RFG combustion units. See Sections V.B.2 and VI.A of this document for a more detailed discussion of SO_2 BACT and proposed permit conditions for RFG combustion sources.

4. Thermal Oxidizer PM_{10} Emissions

The Tank Farm Thermal Oxidizer is subject to a PM_{10} BACT emission limit of 0.0075 lb/MMBtu. The proposed permit conditions, including emission limits/standards, monitoring, recordkeeping, reporting, and

testing requirements, are consistent with those contained in other sections of the proposed permit involving RFG combustion units. See Sections V.B.1 and VI.A of this document for a more detailed discussion of PM_{10} BACT and proposed permit conditions for RFG combustion sources.

5. Thermal Oxidizer NO_X Emissions

The Tank Farm Thermal Oxidizer is subject to a NO_X BACT emission limit of 0.04 lb/MMBtu. With the exception of the unit-specific BACT emission limit, the proposed permit conditions, including monitoring, recordkeeping, reporting, and testing requirements, are consistent with those contained in other sections of the proposed permit involving RFG combustion units. See Section VI.A of this document for a more detailed discussion of the proposed permit conditions relating to NO_X emissions from combustion sources.

6. Thermal Oxidizer CO Emissions

The Tank Farm Thermal Oxidizer must be designed and operated to achieve stringent NESHAP and BACT limitations and standards for VOC and organic HAPs as required in the proposed permit. Based on this, it can be assumed that the oxidizer will operate with inherently complete combustion and minimal CO emissions. The proposed permit does not contain specific CO emission limitations or standards for the Tank Farm Thermal Oxidizer. The design and operational requirements for VOC and HAP control and associated monitoring, recordkeeping, and reporting provisions were deemed sufficient for the purpose of minimizing CO emissions.

7. Equipment in VOC and Organic HAP Service

The piping components associated with the Group "B" Storage Tanks may include equipment in VOC and organic HAP service. The requirements pertaining to this equipment are consolidated in Section XXIV of Attachment "B" of the proposed permit and are referenced in Condition XVII.B.8 of Attachment "B" of the proposed permit. These requirements are discussed in Section VI.X herein.

R. Group "C" Storage Tanks (Attachment "B" Section XVIII)

1. VOC and HAP Provisions

Group "C" Storage Tanks, which consist of 20 external floating roof storage vessels, are subject to BACT requirements for VOC emissions and to the petroleum refinery NESHAP [40 CFR 63.646; §§ 63.119 - 63.121, by reference] for HAP emissions. The provisions of § 63.119(c) of 40 CFR part 63 were incorporated into the proposed permit. BACT requirements are noted by citation. See Section V.F of this document for information on the BACT analysis for storage tanks.

Pursuant to A.A.C. R18-2-406(A)(4) [BACT] and NESHAP requirements for new sources [40 CFR 63.646; § 63.119(c) by reference], each Group "C" storage tank must be equipped with an external floating roof with a dual seal closure device meeting specific design criteria. In accordance with 40 CFR 63.119(a)(1), the maximum true vapor pressure of the volatile organic liquid (VOL) and organic HAPs stored in Group "C" Storage Tanks shall not be greater than 76.6 kPa (equivalent to 11 pressure per square inch absolute (psia).

Monitoring, recordkeeping, and reporting conditions include the compliance determination procedures of 40 CFR 63.120(b). Additional NESHAP recordkeeping and reporting conditions are consistent with the requirements of 40 CFR 63.654(f), (g), and (h) and 40 CFR 63.123, by reference in 40 CFR 63.654(i), as applicable. No specific testing requirements apply. However, the test methods contained in 40 CFR 63 subpart CC are referenced.

Finally, the proposed permit includes requirements for tank degassing and cleaning, consistent with the BACT determination for storage tank VOC emissions as discussed in Section V.F.1 herein. These include a requirement to control degassing emissions using liquid balancing, incineration, condensation, or another control method subject to prior approval by the Director. The recordkeeping requirements in the proposed permit, pertaining to tank degassing and cleaning operations, include requirements for maintaining records of tank identification and capacity; records of the material stored; records of the flow rate and VOC concentration of gases vented to the degassing equipment; records of the total amount of VOC processed in the degassing equipment; records of the control efficiency of the degassing equipment; and records of the degassing equipment operating parameters, specific to the type of degassing equipment being used.

2. Equipment in VOC and Organic HAP Service

The piping components associated with the Group "C" Storage Tanks may include equipment in VOC and organic HAP service. The requirements pertaining to this equipment are consolidated in Section XXIV of Attachment "B" of the proposed permit and are referenced in Condition XVIII.B.7 of Attachment "B" of the proposed permit. These requirements are discussed in Section VI.X herein.

S. Group "D" Storage Tanks (Attachment "B" Section XIX)

1. VOC and HAP Provisions

Group "D" Storage Tanks, which consist of six pressure vessels designed to operate with zero emissions, are categorically exempt from NESHAP (40 CFR 63 subpart CC) requirements. To meet NESHAP exemption criteria and BACT requirements, all Group "D" Storage Tanks must be

designed to operate in excess of 204.9 kPa without emissions to the atmosphere. The definition of "storage vessel" in subpart CC (40 CFR 63.641) specifically excludes "pressure vessels designed to operate in excess of 204.9 kPa without emissions to the atmosphere."

Monitoring, recordkeeping, and reporting conditions include requirements to maintain operating pressure records for the purpose of BACT and the voluntarily accepted minimum pressure requirement.

2. Equipment in VOC and Organic HAP Service

The piping components associated with the Group "D" Storage Tanks may include equipment in VOC and organic HAP service. The requirements pertaining to this equipment are consolidated in Section XXIV of Attachment "B" of the proposed permit and are referenced in Condition XIX.B.3 of Attachment "B" of the proposed permit. These requirements are discussed in Section VI.X herein.

T. Group "E" Storage Tank (Attachment "B" Section XX)

1. Visible Emissions

A single storage tank, Asphalt Tank T-42801, comprises the Group "E" Storage Tank category. The asphalt storage tank is subject to the requirements of 40 CFR 60 subpart UU. Section 60.472(c) of subpart UU requires that asphalt tanks be operated with zero visible emissions (opacity) to the atmosphere, except for one consecutive 15-minute period in any 24-hour period when the transfer lines are being blown for cleaning. Pursuant to BACT, the tank exhaust must be cooled to below 120E F and vented through a fiberglass or steel wool filter system for minimizing PM_{10} emissions. See Section V.F of this document for information on the BACT analysis for storage tanks.

Monitoring, recordkeeping, and reporting conditions include the requirement to conduct and maintain records of daily opacity observations. EPA Reference Method 9 is specified for performing opacity measurements on the asphalt tank exhaust. Additionally, for the purpose of BACT, the Permittee must monitor tank exhaust gas temperature at the inlet to the particulate filter weekly and maintain records of each periodic reading.

2. VOC and HAP Provisions

Based on the low vapor pressure of asphalt (approximately 0.9 mmHg, or 0.12 kPa at 325 EF), the asphalt storage tank qualifies as a Group 2 storage vessel for the purpose of the refinery NESHAP (40 CFR 63

draft

subpart CC).[10] As such, the only NESHAP requirements contained in the proposed permit are: 1) the Permittee shall not cause or allow liquid with a true vapor pressure of 3.5 kPa or greater to be stored in the asphalt tank, and 2) readily accessible records showing the dimensions and capacity of the asphalt tank must be maintained.

For the purpose of VOC BACT, the Permittee must maintain records of the liquids stored in the asphalt tank, the period of storage, and the maximum true vapor pressure of such liquids during the respective storage period.

U. Truck and Rail Car Loading Racks (Attachment "B" Section XXI)

1. VOC and HAP Provisions

The proposed permit includes separate and distinct requirements for gasoline product loading racks, distillate product loading racks, and LPG product loading racks. The requirements for all loading racks reflect BACT for VOC emissions; the requirements for gasoline product loading racks also reflect applicable provisions of the petroleum refinery NESHAP [40 CFR 63, subpart CC, § 63.650] for HAP emissions.

Each of these regulations includes provisions requiring leak-tight cargo tanks (i.e., tank trucks or rail cars) and the use of either vapor recovery or vapor destruction units. The requirements generally relating to the loading of leak-tight cargo tanks include procedures relating to the three test methods that are required to be conducted in order to certify a cargo tank as leak-tight: the annual certification test, the leak detection test, and the nitrogen pressure decay field test. In addition, the proposed permit includes a requirement for maintaining the gauge pressure inside the cargo tank within a specified range and a requirement for continuous monitoring of system gauge pressure during loading of cargo tanks.

There is a minor discrepancy within and between the cargo tank pressure and vacuum limitations, and associated monitoring requirements, in the various provisions that are applicable under 40 CFR 63 subpart CC. Specifically, under §§ 60.502(h) and (i) of 40 CFR 60 subpart XX, the pressure limitation is "less than 4,500 pascals (450 mm of water)." (These provisions of subpart XX are referenced by § 63.422(a) of 40 CFR 63 subpart R, which in turn is referenced by § 63.650 of 40 CFR 63 subpart CC.) However, these two values are not equivalent, as is implied by the regulatory language (4,500 pascals is equal to 460 mm of water). In 40 CFR 63 subpart R, the U.S. EPA both corrected the mathematical error in 40 CFR 60 subpart XX and changed the preferred set of units for pressure measurements: The pressure testing required by § 63.425(e)(1)

[10] Vapor pressure data from "Emission Factor Documentation for AP-42 Section 11.1: Hot Mix Asphalt Production." Final Report. December 2000. EPA OAQPS. Pg. 4-83.

of 40 CFR 63 subpart R requires an initial pressure of "460 mm H_2O (18 in. H_2O)." For the sake of both mathematical accuracy and internal consistency, the Department has used its discretion in specifying all pressure limitations and measurements as "460 mm H_2O (18 in. H_2O)" or equivalent.

In addition, the proposed permit terms reflect BACT, which overlaps significantly with the other applicable regulations. BACT for the gasoline product loading racks requires the use of a vapor recovery unit and a thermal oxidizer, in series, to control VOC emissions. The flow rate of VOC in the exhaust from the vapor recovery unit serving the gasoline product loading racks is limited to 7.5 mg per liter of gasoline loaded and the VOC emission rate from the thermal oxidizer is limited to 1.25 pounds per million gallons loaded. BACT for the distillate product loading racks requires the use of a thermal oxidizer to achieve a VOC emission limit of 22.0 pounds per million gallons loaded. As discussed in detail in Sections IV.C.7 and IV.E.6 herein, the VOC BACT provisions are more stringent than the corresponding VOC emission limits under the NESHAP. The provisions of these regulations that are less stringent than BACT and directly comparable to the BACT emission limits have been streamlined out of the proposed permit, as described in Sections IV.C.7 and IV.E.6 herein.

Monitoring, recordkeeping, and reporting conditions include compliance determination procedures, the MACT standards, and additional specific BACT and CAM monitoring requirements for the thermal oxidizers. Because the gasoline and distillate product loading racks will share common thermal oxidizers (i.e., one oxidizer at the rail car loading area and one at the truck loading area), the proposed permit includes an equation to be used to determine compliance during periods when a thermal oxidizer is controlling emissions from both gasoline and distillate product loading racks. The control device operating parameters that serve as a surrogate for compliance with the VOC emission limits are the thermal oxidizer combustion chamber temperature and exhaust gas volumetric flow rate. Consistent with the requirements of the CAM rule, the proposed permit requires that the Permittee develop a CAM plan, submit this plan for the Director's approval, and comply with the provisions of the plan at all times. The proposed permit requires that a minimum combustion chamber temperature be established during thermal oxidizer during performance testing; that the maximum exhaust gas volumetric flow rate be established, at a level corresponding to a minimum combustion chamber residence time of at least 0.75 seconds, by engineering calculations; that the exhaust gas flow rate be maintained at or below the specified maximum level continuously, based on a 15-minute averaging period; and that the temperature be maintained at or above the minimum level continuously, based on a 15-minute averaging period. The proposed permit also requires annual inspections of the thermal oxidizer burners and the combustion chamber monitoring system.

2. Thermal Oxidizer Operational Limitations

The Permittee is restricted to using RFG and natural gas in the thermal oxidizers, consistent with the information provided in the permit application. This restriction is necessary to ensure the enforceability of the representations made in the permit application, because these representations form the basis of all regulatory and technical analyses performed by the Department.

The proposed permit does not include any enforceable limitation on the heat input to the loading rack thermal oxidizers. The sole function of the thermal oxidizers is to control emissions of VOC and organic HAPs; the Permittee has no economic incentive to operate these devices at heat input rates higher than necessary to achieve adequate control efficiency. Heat input limits would generally provide disincentive to the Permittee to operate the thermal oxidizers at higher control efficiencies. The emissions of VOC and organic HAP due to insufficient temperature in the thermal oxidizers are substantial; the emissions of combustion-generated pollutants are relatively small. The Department evaluated whether heat input limits are appropriate and determined that the only possible benefit would be improved tracking of PM_{10} emissions. (Tracking the emissions of other combustion-generated pollutants would be unaffected. Emissions of SO_2 and NO_X are subject to continuous monitoring, and emissions of VOC and CO are inversely related to the thermal oxidizer heat input rate.) The Department concluded that this benefit is significantly outweighed by the potentially greater adverse environmental impacts that would result. Also, it is unlikely that the heat input to either thermal oxidizer will exceed the 12.3 MMBtu/hr rate that was indicated in the permit application. This value is based on an engineering design evaluation of the heat requirements for maintaining the required thermal oxidizer combustion chamber temperature, assuming the maximum gas flow from loading operations. This is a conservative method of estimating required heat input rate to the thermal oxidizer.

3. Thermal Oxidizer SO_2 Emissions

The thermal oxidizers are subject to NSPS (40 CFR 60 subpart J) and BACT requirements for SO_2 emissions. The proposed permit conditions, including emission limits/standards, monitoring, recordkeeping, reporting, and testing requirements, are consistent with those contained in other sections of the proposed permit involving RFG combustion units. The exhaust gases displaced from cargo tanks being loaded are considered to be fuel gas under subpart J, but are not considered to be RFG for the purposes of the SO_2 BACT provisions. See Sections V.B.2 and VI.A of this document for a more detailed discussion of SO_2 BACT and proposed permit conditions for RFG combustion sources.

4. Equipment in VOC and Organic HAP Service

The piping components associated with the Truck and Rail Car Loading Racks may include equipment in VOC and organic HAP service. The requirements pertaining to this equipment are consolidated in Section XXIV of Attachment "B" of the proposed permit and are referenced in Condition XXI.B.6 of Attachment "B" of the proposed permit. These requirements are discussed in Section VI.X herein.

V. Benzene Waste Operation (Attachment "B" Section XXII)

This section of the proposed permit contains the facility-wide requirements under the Benzene Waste NESHAP (40 CFR 61 subpart FF), as discussed in Section IV.C.2 herein. The provisions of subpart FF are included in the proposed permit, generally without modification, except that requirements and compliance options not pertinent to the proposed refinery have been streamlined from the proposed permit. For example, subpart FF includes extensive requirements for surface impoundments, but the Permittee has not requested permission to construct any surface impoundments. Therefore, the proposed permit includes a prohibition on the use of a surface impoundment for storage and treatment of benzene-containing waste, and the subpart FF requirements for surface impoundments have been omitted from the proposed permit.

The Benzene Waste NESHAP requirements are included in a separate section of the proposed permit only for administrative convenience. The specific provisions in Section XXII of Attachment "B" of the proposed permit are expected to apply primarily to the emission units in the Wastewater Treatment Plant; indeed, as required by Condition XXIII.B.1.a in Attachment "B" of the proposed permit, the Permittee must comply with the provisions of Section XXII of Attachment "B" of the proposed permit for all wastewater, regardless of the benzene concentration threshold specified in subpart FF. This control strategy was proposed by the Permittee as BACT. Therefore, the less stringent requirements under subpart FF, for facilities with relatively low benzene waste quantities, have been omitted from the proposed permit.

1. Wastewater Collection System (Drains)

The proposed permit requires that each drain system be equipped with leak-free covers on all openings. The proposed permit also requires that each junction box be equipped with either water seal controls or a plug, routed to the Wastewater Treatment Plant Thermal Oxidizer, or routed to a dedicated dual carbon canister system. Compliance with these equipment design and work practice requirements is required to be demonstrated by performing and maintaining records of inspections. In addition, if the Wastewater Treatment Plant Thermal Oxidizer is used, the Permittee is required to monitor and record any vent stream flow that is bypassed or diverted from the control device, and if a dedicated dual carbon canister system is used, the Permittee is required to perform continuous monitoring of the exhaust stream for breakthrough.

2. Equalization Tank

The proposed permit requires that the Equalization Tank be equipped with a fixed roof and leak-free covers on all openings. Compliance with these equipment design and work practice requirements is required to be demonstrated by performing and maintaining records of inspections. The proposed permit also requires that the Equalization Tank be equipped with a closed-vent system, with the vent stream routed to the Wastewater Treatment Plant Thermal Oxidizer, and the Permittee is required to monitor and record any vent stream flow that is bypassed or diverted from the control device.

3. Oil-Water Separator (API Separator)

The proposed permit requires that the API Separator be equipped with a fixed roof and leak-free covers on all openings. Compliance with these equipment design and work practice requirements is required to be demonstrated by performing and maintaining records of inspections. The proposed permit also requires that the API Separator be equipped with a closed-vent system, with the vent stream routed to the Wastewater Treatment Plant Thermal Oxidizer, and the Permittee is required to monitor and record any vent stream flow that is bypassed or diverted from the control device.

4. Dissolved Air Flotation Unit

The proposed permit requires that the Dissolved Air Flotation Unit be equipped with a fixed roof and leak-free covers on all openings. Compliance with these equipment design and work practice requirements is required to be demonstrated by performing and maintaining records of inspections. The proposed permit also requires that the Dissolved Air Flotation Unit be equipped with a closed-vent system, with the vent stream routed to the Wastewater Treatment Plant Thermal Oxidizer, and the Permittee is required to monitor and record any vent stream flow that is bypassed or diverted from the control device.

5. Biotreater

The proposed permit requires that the Biotreater be equipped with a fixed roof and leak-free covers on all openings. Compliance with these equipment design and work practice requirements is required to be demonstrated by performing and maintaining records of inspections. The proposed permit also requires that the Biotreater be equipped with a closed-vent system, with the vent stream routed to the Wastewater Treatment Plant Thermal Oxidizer, and the Permittee is required to monitor and record any vent stream flow that is bypassed or diverted from the control device.

6. Wastewater Treatment Processes, Collectively

draft

The proposed permit requires that the waste treatment processes, collectively, remove benzene from waste by 99 percent, on a mass basis, or to an effluent concentration less than 10 parts per million by weight (ppmw). Compliance with this requirement is required to be demonstrated either through performing engineering calculations or by measuring benzene quantity in waste before and after (i.e., upstream and downstream of) treatment processes.

The Department recognizes that Condition XXII.B.7.a(3) of the proposed permit, which implements 40 CFR 61.348(a)(3), is potentially confusing. This condition does not proscribe dilution; rather, it proscribes dilution as a means to avoid complying with Conditions XXII.B.2 through XXII.B.6. For example, if a process wastewater stream that would require control is combined with a storm water stream, the combined stream must be treated in units that comply with Conditions XXII.B.2 through XXII.B.6, even if the benzene concentration of the resulting (combined) stream is less than 10 ppmw. The following discussion from the preamble to the March 7, 1990, Federal Register notice (55 FR 8292), announcing promulgation of 40 CFR 61 subpart FF, clarifies that this is the intent of the regulatory provision:

> *"d. Dilution*
>
> *"To avoid situations where an owner or operator would dilute or mix waste streams to reduce the benzene concentration below the 10 ppmw cutoff level, the proposed standards included an equation for calculating a concentration limit that must be met when multiple waste streams are combined before treatment. Several commenters stated that the equation is unwieldy and unusable in many situations because of the large number of waste streams that must be considered and the many different ways in which waste streams are combined for transfer or treatment. The EPA agrees that using the dilution equation could be difficult in many situations and has deleted it from the final rule. The final rule allows the combination of individual waste streams to facilitate treatment in a centralized treatment process unit but prohibits the use of dilution or mixing of waste streams for the sole purpose of reducing the benzene concentration.*
>
> *"While the final rule allows the combination of waste streams for the purpose of centralized treatment, EPA recognizes that this allowance could result in emissions and risks higher than intended in certain cases when many large volume waste streams that contain levels of benzene above and below 10 ppmw are mixed. This situation could occur if an owner or operator chooses to reduce the benzene content of process wastewater streams through treatment that occurs in a facility's wastewater treatment system rather than segregate streams with greater than 10 ppmw benzene for separate treatment. The wastewater treatment system*

draft

at some facilities, such as at petroleum refineries, manages large quantities of wastewater made up of a mixture of waste streams having benzene concentrations above and below 10 ppmw. The mixed stream may go through several management steps leading to a biological treatment unit. Due to the large volume of wastes handled, benzene emissions could be substantial even though the benzene concentration in the mixed waste is below 10 ppmw. The dilution equation in the proposed rule would have required an appropriate level of control in these situations by establishing a treatment limit below 10 ppmw for the mixed stream. With the dilution equation deleted in the final rule, some other provision is needed to ensure the streams are treated to an appropriate level. Therefore, a provision has been added to the final rule that applies specifically to those situations where an owner or operator chooses to use an existing wastewater treatment system to meet the treatment requirements of the rule. In these situations, the final rule requires the facility to apply controls to all wastewater treatment units up to the point where the benzene concentration is below 10 ppmw and one of the following occurs: (1) The total annual quantity of benzene in the process wastewater for the facility is reduced below 1 megagram; or (2) the waste has reached the biological treatment unit. Biological treatment units would need to be controlled only if the benzene concentration of the waste entering the unit is 10 ppmw or greater. These units routinely remove up to 80 percent of the organics in dilute waste streams and thus would not be required to meet the 1 megagram per year limit if the concentration entering the unit is less than 10 ppmw."

The entire preamble discussion is included for completeness, however, references to the "1 megagram per year" compliance option are not applicable to the proposed refinery.

W. Wastewater Treatment Plant (Attachment "B" Section XXIII)

1. Operational Requirements for Wastewater Treatment Vessels

Condition XXIII.B.1.a in Attachment "B" of the proposed permit requires that the Permittee comply with the provisions of Section XXII of Attachment "B" of the proposed permit for all process wastewater, regardless of benzene concentration. The requirements of Section XXII of Attachment "B" of the proposed permit are discussed in Section VI.V herein.

2. Operational Requirements for the Thermal Oxidizer

The Permittee is restricted to using RFG and natural gas in the Wastewater Treatment Plant Thermal Oxidizer, consistent with the information provided in the permit application. This restriction is

necessary to ensure the enforceability of the representations made in the permit application, because these representations form the basis of all regulatory and technical analyses performed by the Department.

Other design standards and operational requirements for the Wastewater Treatment Plant vessels and Thermal Oxidizer include the most stringent requirements of 40 CFR 61 subpart FF, and additional, more stringent requirements for the Thermal Oxidizer for the purpose of BACT. Specifically, for the Wastewater Treatment Plant Thermal Oxidizer, VOC BACT emission limitations are design standards and operational requirements including minimum design VOC destruction efficiency ($99.9 percent), minimum combustion chamber temperature ($1600 EF), and maximum exhaust gas volumetric flow rate corresponding to a minimum residence time ($0.75 second).

Monitoring, recordkeeping, and reporting conditions include the compliance determination procedures of subpart FF and additional specific BACT monitoring requirements for the Thermal Oxidizer. The most important compliance requirement for the Thermal Oxidizer is a requirement for a design evaluation and monitoring plan, similar to that required for the Tank Farm Thermal Oxidizer under the MACT regulations. In addition, the Thermal Oxidizer must be equipped with continuous monitoring systems for combustion chamber temperature and exhaust gas volumetric flow rate. Excess emissions for the purpose of BACT are defined as each 5-minute block during which the thermal oxidizer combustion chamber outlet temperature falls below the specified minimum or the exhaust gas volumetric flow rate exceeds the specified maximum. An annual inspection of the thermal oxidizer burner and temperature monitoring system is also required.

The proposed permit does not include any enforceable limitation on the heat input to the Wastewater Treatment Plant Thermal Oxidizer. The sole function of the thermal oxidizer is to control emissions of VOC and organic HAPs; the Permittee has no economic incentive to operate the device at a heat input rate that is higher than necessary to achieve adequate control efficiency. A heat input limit would generally provide disincentive to the Permittee to operate the thermal oxidizer at higher control efficiencies. The emissions of VOC and organic HAP due to insufficient temperature in the thermal oxidizer are substantial; the emissions of combustion-generated pollutants are relatively small. The Department evaluated whether a heat input limit is appropriate and determined that the only possible benefit would be improved tracking of PM_{10} emissions. (Tracking the emissions of other combustion-generated pollutants would be unaffected. Emissions of SO_2 and NO_X are subject to continuous monitoring, and emissions of VOC and CO are inversely related to the thermal oxidizer heat input rate.) The Department concluded that this benefit is significantly outweighed by the potentially greater adverse environmental impacts that would result. Also, it is unlikely that the heat input will exceed the 0.334 MMBtu/hr rate that was

indicated in the permit application. This value is based on an engineering design evaluation of the heat requirements for maintaining the required thermal oxidizer combustion chamber temperature, assuming a gas flow that reflects the simultaneous maximum rate of displacement from all Wastewater Treatment Plant vessels. This is a conservative method of estimating required heat input rate to the thermal oxidizer.

3. SO_2 Emissions from the Thermal Oxidizer

The Wastewater Treatment Plant Thermal Oxidizer is subject to NSPS (40 CFR 60 subpart J) and BACT requirements for SO_2 emissions. The proposed permit conditions, including emission limits/standards, monitoring, recordkeeping, reporting, and testing requirements, are consistent with those contained in other sections of the proposed permit involving RFG combustion units. See Sections V.B.2 and VI.A of this document for a more detailed discussion of SO_2 BACT and proposed permit conditions for RFG combustion sources. Note that the exhaust gases displaced from wastewater treatment vessels are considered to be RFG both under subpart J and for the purposes of the SO_2 BACT provisions.

4. Spray Dryer Heater

The Wastewater Treatment Plant includes one process heater: the Spray Dryer Heater. This heater is required to use low-NO_X burners to control NO_X emissions. See Sections VI.A.1 through VI.A.6 herein for a discussion of the requirements relating to this process heater.

5. Opacity and PM_{10} Emissions from the Spray Dryer Baghouse

The opacity and particulate matter emission limits applicable to the Spray Dryer Baghouse under BACT, A.A.C. R18-2-702(B), and A.A.C. R18-2-730(A)(1) are included in the proposed permit. The PM BACT emission limit of 0.005 gr/dscf will be significantly more stringent than the process weight-based limit under A.A.C. R18-2-730(A)(1) during normal operation. However, it is theoretically possible that the latter limit could be more stringent under some operating conditions. For this reason, the PM emission limit under A.A.C. R18-2-730(A)(1) has not been streamlined from the permit.

The compliance demonstration requirements for this emission unit include monitoring of pressure drop; periodic inspections and visible emissions observations; and initial and annual particulate matter emission tests. These compliance demonstration requirements meet the provisions of the applicable state regulations as well as the federal CAM rule. See Section IV.F herein for a detailed discussion of CAM requirements.

6. Equipment in VOC, Organic HAP, and Hydrogen Sulfide Service

The piping components in the Wastewater Treatment Plant may include equipment in VOC, organic HAP, and hydrogen sulfide service. The requirements pertaining to this equipment are consolidated in Section XXIV of Attachment "B" of the proposed permit and are referenced in Condition XXIII.B.4 of Attachment "B" of the proposed permit. These requirements are discussed in Section VI.X herein.

X. Equipment Leaks (Attachment "B" Section XXIV)

1. Organization of Proposed Permit Conditions

The general organization and subsection headings under Section XXIV of Attachment "B" of the proposed permit differ from other sections of the proposed permit to better align with leak detection and repair (LDAR) NESHAP and BACT provisions. Section XXIV.B contains emission limitations, standards, and monitoring provisions including general requirements (XXIV.B.1); equipment category specific VOC and organic HAP equipment leak provisions (XXIV.B.2 through XXIV.B.15); H_2S equipment leak provisions (XXIV.B.16); and restrictions designed to make enforceable the benzene emission rate from equipment leaks (XXIV.B.17). Section XXIV.C contains recordkeeping and reporting requirements, and Sections XXIV.D and XXIV.E contain source testing and permit shield provisions, respectively.

2. General Equipment Leak Provisions: VOC, Organic HAP, and H_2S Emissions

Section XXIV.B.1 of Attachment "B" of the proposed permit contains general equipment leak provisions corresponding with the NESHAP provisions in 40 CFR 63.648 (subpart H § 63.161 and 63.162 by reference) and BACT for VOC and H_2S emissions. These conditions include definitions of affected equipment, general equipment identification requirements, specifically excluded equipment (e.g., equipment in vacuum service), identification procedures for equipment leaks, general task completion and equipment repair timing specifications, and general BACT equipment specifications. For the purpose of BACT, many of the NESHAP conditions were modified to apply to equipment in VOC or organic HAP service. Equipment in H_2S service was defined as all equipment that contains or contacts a fluid that is at least 2 percent by weight H_2S (see Section V.I.2 herein for a complete discussion of BACT for H_2S emissions from equipment leaks). All proposed BACT permit conditions were identified by regulatory citation [A.A.C. R18-2-406(A)(4)].

3. Equipment-Specific Provisions: VOC and Organic HAP Emissions

Refinery-wide equipment in organic HAP service are subject to the new source requirements of the petroleum refinery NESHAP, 40 CFR 63 subpart CC § 63.648. In accordance with 63.648(a), new sources must

comply with the HON equipment leak provisions of 40 CFR 63 subpart H. Sections XXIV.B.2 through XXIV.B.15 of Attachment "B" of the proposed permit contain equipment-specific VOC and organic HAP equipment leak provisions organized consistently with 40 CFR 63 subpart H (§§ 63.163 through 63.179) as follows:

XXIV.B.2	Pumps in Light Liquid Service
XXIV.B.3	Compressors
XXIV.B.4	Pressure Relief Devices in Gas/Vapor Service
XXIV.B.5	Sampling Connection Systems
XXIV.B.6	Open-ended Valves or Lines
XXIV.B.7	Valves in Gas/Vapor Service and in Light Liquid Service
XXIV.B.8	Pumps, Valves, Connectors, and Agitators in Heavy Liquid Service; Instrumentation Systems; and Pressure Relief Devices in Liquid Service
XXIV.B.9	Surge Control Vessels and Bottoms Receivers
XXIV.B.10	Delay of Repair
XXIV.B.11	Closed-vent Systems and Control Devices
XXIV.B.12	Connectors in Gas/Vapor Service and in Light Liquid Service
XXIV.B.13	Quality Improvement Program for Valves
XXIV.B.14	Quality Improvement Program for Pumps
XXIV.B.15	Alternative Means of Emission Limitation

The NESHAP includes requirements for categories of equipment that will not be present at the proposed refinery. These requirements, for agitators in gas/vapor service and in light liquid service (pursuant to § 63.173) and for batch processes (pursuant to § 63.178) are not included in the proposed permit.

The proposed permit conditions in Sections XXIV.B.2 through XXIV.B.15 of Attachment "B" of the proposed permit are consistent with the provisions of §§ 63.163 - 63.179 of subpart H. As discussed in Section V.I of this document, the HON equipment leak provisions were deemed representative of baseline BACT for VOC emissions from equipment leaks. Because the requirements reflecting BACT are somewhat more stringent, streamlining of the applicable NESHAP provisions is incorporated in the proposed permit as follows:

- Extending the applicability of the NESHAP provision to apply to equipment either in VOC service or organic HAP service;
- Revising the equipment leak definition to reflect the BACT concentration threshold of 100 ppmv for valves and connectors in gas/vapor and light liquid service;
- Revising the equipment leak definition to reflect the BACT concentration threshold of 500 ppmv for all other equipment categories;
- Revising the required deadlines for the first attempt at repair (from 5 days down to 24 hours) and for successful repair (from 15

days down to 7 days) for valves in gas/vapor service or light liquid service, connectors in gas/vapor service or light liquid service, pumps in light liquid service, and compressors;

- Eliminating the provisions for designating pumps in light liquid service as "unsafe to monitor" and for monitoring these pumps with less frequency than other pumps;
- Eliminating the provisions providing for reduced monitoring frequency for valves in gas/vapor service or light liquid service;
- Eliminating the quality improvement program provisions for pumps in light liquid service, as the applicability threshold for this program (in terms of percent leaking components) is above the allowable level representing BACT; and
- Eliminating the provisions for increased monitoring frequency and the quality improvement program provisions for valves in gas/vapor service or light liquid service, as the applicability thresholds for these provisions (in terms of percent leaking components) are above the allowable level representing BACT.

Additional specific BACT conditions, including equipment technology requirements and specifications as documented in Section V.I herein, are also incorporated. Section V.I of this document presents a complete discussion of BACT selection for equipment leaks and supporting analyses. Each proposed permit condition is referenced with corresponding regulatory citations (i.e., NESHAP and/or BACT).

4. Equipment Leak Provisions for H_2S Emissions

Section XXIV.B.16 of Attachment "B" of the proposed permit contains emission limitations/standards and monitoring requirements for H_2S emissions from equipment leaks. These requirements exclusively represent BACT, and are discussed in detail in Section V.I.2 of this document.

5. Equipment Leak Provisions for Benzene Emissions

Section XXIV.B.17 of Attachment "B" of the proposed permit contains limitations on the number of components in organic HAP service. These provisions are included in the proposed permit in order to make enforceable the benzene emission rates that were included in the AAAQG modeling analysis, discussed in Section VII.A.3.e herein.

6. Recordkeeping and Reporting Requirements

Section XXIV.C of Attachment "B" of the proposed permit contains recordkeeping and reporting requirements for equipment leaks. In accordance with 40 CFR 63.654(d), HON subpart H recordkeeping requirements (§ 63.181) and reporting requirements (§ 63.182) must be met with certain exceptions. These requirements are incorporated in the proposed permit along with other applicable requirements under § 63.654.

Modifications to proposed NESHAP-based permit conditions were made to incorporate BACT requirements.

7. Testing Requirements

The equipment leak test methods and procedures required by the NESHAP (40 CFR 63.180) are incorporated in Section XXIV.D.1 of Attachment "B" of the proposed permit for the purpose of both MACT and BACT compliance. The requirements specify EPA Reference Method 21 of 40 CFR part 60 for monitoring VOC and organic HAP emissions from equipment leaks.

Y. Emergency Flares (Attachment "B" Section XXV)

1. Emergency Usage

The proposed permit prohibits the use of the two emergency flares to combust any gases other than natural gas, as pilot gas and purge gas, and process upset gases generated during malfunctions. These proposed permit conditions reflect and make enforceable the Permittee's commitment to operate the emergency flares only to control emissions during periods of upset and malfunction.

2. Equipment Design and Work Practice Requirements

The proposed permit includes design requirements related to exit velocity and flame detection, to ensure that the flare is continuously available for controlling emissions, and smokeless operation, to ensure that emission control is maximized during periods of upset and malfunction. Specifically, the proposed permit requires a design incorporating steam assist; limits exit velocity to a maximum of 60 ft/sec; requires that natural gas purge be employed so that the net heating value of the gas being combusted is at least 300 Btu/scf; requires the continuous presence of a pilot flame, with monitoring conducted using a thermocouple or equivalent device; and requires operation with no visible emissions, with visible emissions observations conducted for each flare event. These proposed permit conditions are based largely on the parallel requirements set forth in the NSPS regulations (40 CFR 60.18) and the NESHAP regulations (40 CFR 63.11).

3. Testing Requirements

In addition, the proposed permit includes requirements for a flare operation, monitoring, and maintenance plan that will ensure collection of representative emission data during flare events. These data can be utilized by the Permittee in implementing design and work practice changes, and will be utilized by the Department for the purposes of determining appropriate enforcement action for flare events.

Z. Steam Boilers (Attachment "B" Section XXVI)

1. Fuel Use

The Permittee is restricted to using natural gas in the steam boilers, consistent with the information provided in the permit application, and heat input is limited to the maximum rates indicated in the permit application. These restrictions are needed to ensure the enforceability of the representations made in the permit application, because these representations form the basis of all regulatory and technical analyses performed by the Department.

2. NO_X Emissions

Each of the steam boilers is required to use low-NO_X burners and flue gas recirculation to control NO_X emissions. Each is subject to a NO_X emission limit of 0.0125 lb/MMBtu heat input (HHV), based on a rolling three-hour average, representing BACT. In addition, for each steam boiler, the proposed permit includes the NSPS emission limit of 0.20 lb/MMBtu, based on a rolling 30-day average. Although the NSPS limit is substantially less stringent than the BACT limit during normal operations, the NSPS limit does not provide an exception for periods of startup, shutdown, or malfunction. Thus, the NSPS limit has the potential to be more stringent during some periods, and for this reason it has not been streamlined from the permit. Compliance with the NO_X emission limits is required to be demonstrated using CEMS. Each CEMS is required to meet the performance and quality assurance requirements of 40 CFR part 60, appendices B and F.

3. CO Emissions

Each of the steam boilers is subject to a CO emission limit representing BACT. Compliance with these emission limits is required to be demonstrated using CEMS. Each CEMS is required to meet the performance and quality assurance requirements of 40 CFR part 60, appendices B and F.

AA. Cooling Tower (Attachment "B" Section XXVII)

1. Circulating Water Flow Rate

Circulating water flow rate is limited to the maximum rate indicated in the permit application. This restriction is needed to ensure the enforceability of the representations made in the permit application, because these representations form the basis of all regulatory and technical analyses performed by the Department.

2. Opacity of Visible Emissions

The Cooling Tower is subject to A.A.C. R18-2-702(B) for visible emissions. The applicable 20 percent opacity limit was incorporated in the proposed permit. However, because any particulate matter that is emitted from the cooling tower will occur as drift, which by definition is uncombined water, valid determination of opacity using EPA Reference Method 9 is not expected to be feasible. In addition, the particulate matter emissions from the cooling tower are expected to be very low in relation to the exhaust gas volumetric flow. For these reasons, compliance with the applicable opacity standard under this regulation is presumed under all operating conditions, and no monitoring or testing is required.

3. Particulate Matter Emissions

The proposed permit includes a limit on the particulate matter emission rate representing the modeled emission rate and a requirement for high-efficiency drift eliminators representing BACT. Compliance with the particulate matter emission rate is required to be demonstrated through calculations using circulating water flow rate, drift eliminator design efficiency, and solids loading in the circulating water as determined through monthly measurements.

4. Heat Exchange System Operational Requirements

The proposed permit includes equipment design and work practice requirements representing BACT for VOC emissions. (See Section V.L.2 herein for a detailed discussion of the VOC BACT determination for the cooling tower.) Compliance with these operational requirements is to be demonstrated through recordkeeping and reporting requirements.

BB. Internal Combustion Engines (Attachment "B" Section XXVIII)

1. Fuel Specification and Fuel Consumption Limitations

Fuel consumption in each internal combustion engine is restricted to No. 2 distillate fuel oil, and fuel consumption during non-emergency situations is limited to the maximum rates indicated in the permit application. (Heat input capacities specified in the permit application were converted to fuel consumption rates using a heating value of 140,000 British Thermal Unit (Btu) per gallon for No. 2 diesel fuel.) These restrictions are needed to ensure the enforceability of the representations made in the permit application, because these representations form the basis of all regulatory and technical analyses performed by the Department.

In addition, the sulfur content of the No. 2 distillate fuel oil burned in each of the internal combustion engines is limited to a maximum of 15 ppmw, representing BACT for SO_2 emissions. Compliance with these proposed permit terms is required to be demonstrated through

recordkeeping. On each day that a particular engine is operated, the Permittee is required to create and maintain records of the quantity and type of fuel combusted, as well as the sulfur content and the method by which the sulfur content was determined.

2. NO_X, CO, and PM Emissions

The proposed permit includes a requirement that each internal combustion engine be guaranteed by the engine manufacturer to achieve NO_X, CO, and PM emissions equal to or less than the levels determined to represent BACT. The proposed permit also requires that each engine be operated and maintained in accordance with the engine manufacturer's instructions and recommendations. Compliance with these requirements is required to be demonstrated through recordkeeping. The Permittee is required to maintain, for the life of each engine, records of the manufacturer's emission performance guarantee for that engine. The Permittee is also required to maintain records of all maintenance performed on each engine.

3. Visible Emissions

The Internal Combustion Engines are subject to A.A.C. R18-2-719(E) for visible emissions. The applicable 40% opacity limit was incorporated in the proposed permit for each internal combustion engine. Compliance with this limitation is required to be demonstrated through monitoring and recordkeeping. The Permittee is required to perform visible emissions observations, using EPA Reference Method 9, for at least six minutes on each day that a particular engine is operated (other than emergency operations). The Permittee is also required to maintain records of all visible emissions observations. Finally, the proposed permit includes a prohibition on routine (i.e., non-emergency) operation of any internal combustion engine at any time when a visible emissions observation, using EPA Reference Method 9, cannot be performed. This prohibition is not applicable (i.e., operation at any time of day is allowed) on any day on which the requirement for a visible emissions observation has been met for the particular engine.

CC. Mobile Sources and Fugitive Dust Sources (Attachment "B" Section XXIX)

1. Visible Emissions

All nonpoint emission sources are subject to a 40 percent opacity limitation for visible emissions, based on a six-minute average, under A.A.C. R18-2-612. Nonpoint emission sources subject to this regulation include, but are not limited to, open areas, dry washes, riverbeds, roadways, streets, parking lots, storage piles, and material handling operations. The applicable 40 percent opacity limit for nonpoint emission sources was incorporated into the proposed permit.

draft

Mobile sources, excluding motor vehicles and agricultural vehicles, are subject to a 40 percent opacity limitation for visible emissions under A.A.C. R18-2-801, -802, and -804. Compliance with these requirements is based on an observation period of ten consecutive seconds. Mobile sources subject to these regulations include, but are not limited to, offroad machinery and roadway cleaning machinery. The applicable 40 percent opacity limits were incorporated into the proposed permit for visible emissions from these categories of sources.

2. Work Practices

The proposed permit requires that the Permittee prepare, submit, and adhere to a dust control plan; that the dust control plan include and address specific work practices; and that the Permittee pave all roadways and vehicle parking lots. These requirements implement the provisions of A.A.C. R18-2-604, -605, -606, and -607 and the BACT requirements.

draft

VII. AIR QUALITY IMPACT ANALYSIS

A. Ambient Air Quality Impacts Analysis

1. General

The site of the proposed refinery is located in an area that has been designated as attainment or unclassifiable for all criteria pollutants. Therefore, the relevant ambient air quality impact analyses requirements are found in A.A.C. R18-2-406(A)(5) and R18-2-407. The air quality analyses must demonstrate that the project's proposed significant emission increases will not cause or contribute to an exceedance of any applicable National Ambient Air Quality Standard (NAAQS) or PSD increment. (There are primary and secondary NAAQS, and there are separate Class I and Class II PSD increments.) It must also demonstrate the project's proposed significant emission increases will not contribute to an increase in ambient concentrations for a pollutant by an amount in excess of the significance level in any area in which NAAQS for that pollutant are being violated. The PSD pollutants that are proposed to be emitted in significant quantities include NO_x, CO, SO_2, VOC, and PM_{10}.

The NAAQS are maximum concentration "ceilings" measured in terms of the total concentration of a pollutant in the atmosphere. For a new or modified source, compliance with any NAAQS is based upon the total estimated air quality, which is the sum of the background ambient concentrations, the estimated ambient impacts of existing sources of air pollution, and the estimated ambient impacts of the applicant's proposed emissions. A PSD increment, on the other hand, is the maximum increase in ambient concentration that is allowed to occur above a baseline concentration for a pollutant. Significant deterioration is said to occur when the amount of new pollution would exceed the applicable PSD increment. PSD increments have been established for Class II areas, and at lower acceptable levels for Class I areas such as national parks (to further limit air quality degradation in Class I areas).

Additional air quality analyses required under A.A.C. R18-2-407 include an analysis of the impairment to visibility, soils, and vegetation, and an analysis of the air quality impact projected for the area as a result of general commercial, residential, industrial, and other growth associated with the new major source.

The nearest Class I area to the proposed project site is Joshua Tree National Park, located 191 km away. Because no adverse effects were predicted for the facility when it was proposed at the Mobile site, when the nearest Class I area was only 88 km away from the facility, the Department has concluded that there will be no adverse effects at 191 km away from the Mohawk site. Consequently, the Department has largely relied on the detailed Class I area impact analysis that was previously performed for the Mobile site, and a detailed impact analysis for Class I

areas was not performed for the Mohawk site.

The Muggin Mountains Wilderness area lies between 32 and 40 km northwest of the project site. While this area is classified as Class II, and is not subject to the special protections afforded Class I areas under A.A.C. R18-2-406(A)(5) and R18-2-407, it is considered by the Department to be a "sensitive" Class II area. Therefore, the Department requested, and the applicant performed, a visibility analysis for this sensitive Class II area.

The "ADEQ Air Quality Division Modeling Guidelines," June 22, 1998 (hereinafter, "ADEQ MG"), presents policy statements and guidance on many air quality analysis issues, including the authority and application of the Arizona Ambient Air Quality Guidelines (AAAQG). Section 1.3 of Appendix B of the ADEQ MG describes the Department's current HAP/AAAQG program policy, and outlines the legal authority and procedural requirements. In accordance with this Department policy, the Permittee has submitted an AAAQG modeling analysis as part of the PSD permit application.

Finally, as described in A.A.C. R18-2-730(H), "No person shall allow hydrogen sulfide to be emitted from any location in such manner and amount that the concentration of such emissions into the ambient air at any occupied place beyond the premises on which the source is located exceeds 0.03 parts per million by volume for any averaging period of 30 minutes or more". The ambient air quality impact analysis performed by the applicant includes an assessment of the predicted hydrogen sulfide impacts from the proposed facility in the results of the AAAQG analysis. The 1-hour impact can be converted to units of ppm and compared to the 0.03 ppm standard.

2. Modeling Methodology

a. Department and U.S. EPA Modeling Analysis Guidance

The Department's technical requirements and guidance for air quality analyses are described in the ADEQ MG. Additionally, the U.S. EPA's guidance for performing PSD air quality analyses is set forth in the "Guideline on Air Quality Models" (GAQM), codified in 40 CFR Part 51 Appendix W, and in Chapter C of the October 1990 New Source Review Workshop Manual. These guidance documents were utilized to assess the completeness and accuracy of the Arizona Clean Fuels air quality analyses.

b. Arizona Clean Fuels Dispersion Modeling Protocol

For a PSD permit application, the Department requires the submittal and subsequent approval of a dispersion modeling protocol before a dispersion modeling analysis is accepted.

draft

Development of the modeling protocol document guides the applicant in fulfilling all necessary requirements. A recommended protocol format, including suggested content, is described in the ADEQ MG. The Department reviews the protocol and provides comments to the applicant on any deficiencies. After approval of the modeling protocol, the Department will then accept the modeling report. All Class I air quality permit applications should include a formal modeling report summarizing the results of the modeling. Again, the ADEQ MG present a recommended format and suggested content for the modeling report.

The Department received the modeling protocol for the Arizona Clean Fuels project, prepared by URS Corporation, in February 2004. The protocol was reviewed and, in general, it conformed to ADEQ MG and U.S. EPA requirements.

The following sections summarize the procedures and data used in the analysis, and present significant Department comments on the protocol and evaluation comments on the final modeling report.

c. Computer Models Used

The refined model proposed for the air quality analyses is the Industrial Source Complex 3 Short Term Model (ISCST3, version 02035). This model has been approved by the Department for use in the load screening, NAAQS, PSD increment, and AAAQG analyses.

For modeling the Class II visibility impacts within 50 km of the facility, the VISCREEN model was used.

d. Receptor Grid

For the purposes of demonstrating compliance with the PSD increment, NAAQS, and the AAAQGs, a receptor grid was created with sufficient density to determine the maximum model-predicted impact within the surrounding ambient air. Receptor elevations were derived from the United States Geological Service (USGS) 7.5 minute and 1-degree (DEM) data using the AERMAP program.

The Permittee had used the property boundary to represent the process area boundary, as appropriate. While the applicant used 50 meter spacing of receptors along the process boundary and 100 meter spacing within 500 meters of the property boundary, the Department used 25 meter spacing of receptors during its review to ensure compliance with all applicable standards, increments,

and AAAQGs.

e. Meteorological Data

Five years of surface and upper air data from the nearest National Weather Service airport observation station were used in the dispersion modeling analysis. Five years of surface meteorology observed between 1998 and 2002 from the Yuma International Airport were used in conjunction with concurrent upper air observations from Tucson, AZ.

The US EPA mixing height program was used to calculate twice daily mixing heights based on parameters from the Yuma Surface data and Tucson upper air data.

f. Downwash and Good Engineering Practice (GEP)

Because of the effect of building downwash, BPIP was used to calculate the building downwash parameters for input into ISCST3. All of the facility stacks are subject to downwash. The building locations and GEP analysis were independently confirmed. All but two stacks are below the maximum 65 meter allowable GEP height. The two flares (EP13 and EP21) were originally modeled with a height of 100 meters. In the revised confirmatory modeling performed by the Department, the flare heights were adjusted to 65 meters.

During the review of the modeling files, the location of the cooling tower structure was offset from the cooling tower discharge points by approximately 40 meters to the east of where the first emission point is located. Additionally, the height of the cooling tower was modeled at 50.82 meters tall, whereas the point source emission was modeled at 18.30 meters. BPIP was revised to align the tower structure with the emission points. The height of the cooling cells was reset to 1 meter below the release height of the point sources and the revised building parameters were used in the verification of the modeling results. This change did not significantly alter the results.

g. Background Concentrations

The background concentration values presented in Table VII-1 were approved by the Department and used in the modeling analysis. The CO, and O_3 values were based upon the Surprise monitoring station from observations taken during 2001-2002 data. The background SO_2 concentrations are based upon observations at the Phoenix Roosevelt Street station, using the 200-2002 data. The NO_2 value was based upon observations at the Palo Verde station during 2000-2002.

Background SO_2 concentrations were selected based upon the following information. In Arizona, the principal sources of sulfur dioxide emissions has been primary copper smelters and coal-fired power plants. In addition to these sources, most fuels (e.g., gasoline) contain trace quantities of sulfur, and their combustion releases both gaseous sulfur dioxide (SO_2) and particulate sulfate (SO_4). A recent sulfate inventory for Phoenix shows 32 percent of SO_2 emissions come from point sources, 26 percent from area sources, 23 percent from off-road vehicles and equipment, and 19 percent from on-road motor vehicles. Sulfur dioxide is removed from the atmosphere through dry deposition on plants and its conversion to sulfuric acid and eventually to sulfate. Sulfur dioxide has extremely low background levels, with elevated concentrations found downwind of large point sources. Concentrations in urban areas are low and are homogeneously distributed.

Upon reviewing existing ambient monitoring data to represent background SO_2 concentrations, all the sites were determined to be influenced by either copper smelters or coal fired power plants, with the exception of the three urban sites: Central Phoenix, South Scottsdale, and Craycroft (Tucson). Vehicular traffic accounts for most of the gaseous SO_2 being measured in the cities. The Department has taken the "Central Phoenix," aka "Roosevelt Street" 2000-2002 values as adequately conservative. Obviously, lower concentrations could be utilized from the other two urban sites.

The background PM_{10} values were based upon the average concentrations observed from the Yuma/Ajo monitoring stations between 2000-2002.

Table VII-1. Ambient Background Monitored Air Quality

Pollutant	Averaging Period	Background Concentration	NAAQS ($\mu g/m^3$)
CO	1-hour	2807 $\mu g/m^3$	40,000
	8-hour	1260 $\mu g/m^3$	10,000
SO_2	3-hour	47.2 $\mu g/m^3$	1,300
	24-hour	27.1 $\mu g/m^3$	365
	Annual	7.86 $\mu g/m^3$	80
NO_2	Annual	9.41 $\mu g/m^3$	100
O_3	1-hour	0.090 ppm	0.12 ppm
	8-hour	0.077 ppm	0.08 ppm
PM_{10}	24-hour	98.2 $\mu g/m^3$	150
	Annual	30.3 $\mu g/m^3$	50

draft

h. Source Data for the Project

The emission rates and stack parameters used in the modeling analysis are presented in Table VII-2 for point sources, Table VII-3 for area sources, and Table VII-4 for volume sources.

Tables VII-2, VII-3, and VII-4 present the emissions data and stack parameters that represent the operating loads with maximum ambient impacts (i.e., the worst-case load scenarios). Refer to the Permittee's modeling report for stack parameters and emission rates for each operating load.

i. NAAQS and PSD Increment Inventory

The maximum radius of impact (ROI) of the proposed facility was determined to be 7.5 km. Data for other sources within 58 km of the proposed site (i.e., the 7.5 km ROI plus 50 km, rounded) were compiled for the NAAQS cumulative inventory. The emissions, stack parameters, and locations for these sources are presented in Appendix B of the Permittee's modeling report. Approximately 19 other point sources and 30 area sources representing emissions from nearby interstate highways were included in the cumulative modeling inventory. The modeling protocol describes the procedures used to select sources, and to estimate stack parameters when they were not available. The inventory was developed by the Permittee in consultation with the Department and Yuma County.

Although Section 4.3 of the Permittee's modeling report stated that certain sources were excluded from the increment inventory based on the minimal emission rates that allowed elimination of the source based on the "20D" criteria," this was not actually the case. For reference, the "20D" criteria is a screening method that was developed by the State of North Carolina which allows applicants to eliminate off-site sources whose emissions (expressed in tons per year) are less than 20 times the distance from the proposed project source (expressed in km). For example, a source located 20 km away from the project with emissions less than one ton per year of the pollutant in question would not have to be included in the PSD increment consumption analysis. The rationale is that these sources are too small to have a significant impact at the distance. Again, however, this procedure was not actually utilized for this project.

The same source inventory used for the NAAQS analysis was also used for the Class II area PSD increment analysis. This is a conservative assumption because some of the NAAQS sources are not PSD increment-consuming sources and because the allowable rather than the actual emission rates were modeled for increment consumption.

Table VII-2. Source Emissions and Stack Parameters for Arizona Clean Fuels Point Sources

Source ID	UTM Easting (m)	UTM Northing (m)	Elevation (m)	NO_X (g/s)	CO (g/s)	SO_2 (g/s)	PM_{10} (g/s)	VOC (g/s)	Stack Ht (m)	Temp (K)	Velocity (m/s)	Diameter (m)
EP1	232232	3623680	102	9.70E-01	2.24E+00	3.28E-01	4.28E-01	2.27E-01	50.3	461	13.6	2.59
EP2	232583	3623700	103	6.93E-01	2.24E+00	3.28E-01	4.16E-01	2.27E-01	50.3	450	14.7	2.13
EP3	232570	3623700	103	8.82E-02	1.13E-01	1.26E-02	2.52E-02	1.26E-02	50.3	589	13.2	0.67
EP4	232477	3623600	102	7.56E-02	1.38E-01	1.26E-02	2.52E-02	1.26E-02	50.3	650	13.8	0.67
EP5	232418	3623610	102	5.67E-01	7.18E-01	1.01E-02	1.39E-01	7.56E-02	50.3	478	13.0	1.52
EP6	232693	3623730	103	9.70E-01	1.42E+00	2.02E-01	2.65E-01	1.39E-01	50.3	450	14.6	1.98
EP7	232817	3623690	103	2.26E+00	7.23E+00	1.05E+00	1.36E+00	7.18E-01	50.3	422	16.7	3.66
EP8	232837	3623620	103	6.55E-01	8.44E-01	3.78E-02	3.91E-01	2.14E-01	50.3	622	14.8	3.20
EP9	232837	3623620	103	6.55E-01	8.44E-01	3.78E-02	3.91E-01	2.14E-01	50.3	622	14.8	3.20
EP10	231952	3623300	103	7.56E-01	1.01E+00	1.51E-01	1.89E-01	1.01E-01	50.3	450	13.4	1.68
EP11	232603	3623660	103	1.03E-01	6.30E-02	N/A	N/A	N/A	61.0	361	8.0	0.23
EP12	232303	3623660	102	7.56E+00	1.06E+00	4.23E+00	1.01E-01	7.56E-02	50.3	1089	9.5	3.66
EP13	231928	3623799	102	7.56E-03	3.91E-02	6.68E-05	N/A	6.30E-03	106.7[1]	811	5.6	1.22
EP14	231678	3623210	103	N/A	N/A	N/A	1.13E-02	N/A	30.5	200	21.0	0.25
EP15	232883	3624050	103	N/A	N/A	N/A	1.47E-01	N/A	30.5	394	10.6	1.52
EP16	232022	3623290	103	2.90E-01	5.92E-01	3.78E-02	5.04E-01	1.16E-01	15.2	1089	16.17	3.05
EP16r	232022	3623290	103	N/A	N/A	N/A	N/A		15.2	310	3.0	1.00
EP17	232496	3623410	103	1.55E-01	1.31E-01	8.82E-03	1.13E-02	1.75E-01	22.9	533	25.9	1.52
EP18	232877	3623980	103	4.16E-03	3.53E-03	2.52E-04	3.20E-04	1.02E-00	22.9	533	25.9	1.52
EP19	232837	3623850	103	1.01E+00	3.21E+00	4.66E-01	6.05E-01	3.15E-01	50.3	422	16.8	2.96
EP20	232838	3623810	103	8.44E-01	1.12E+00	1.64E-01	2.14E-01	1.13E-01	50.3	422	16.8	1.49
EP21	231714	3623806	102	7.56E-03	3.91E-02	6.68E-05	N/A	6.30E-03	91.4[1]	811	5.6	1.22
EP22	232838	3623760	103	1.01E-01	6.31E-02	N/A	N/A	N/A	60.96	360.93	8.05	0.23
EP23	232854	3624020	103	1.64E-01	2.27E-01	3.78E-02	3.78E-02	2.52E-02	30.5	644	13.7	1.01
EP24	232089	3623510	102	5.61E-02	1.04E-00	7.69E-02	1.34E-02	1.34E-02	6.1	589	50	0.25
EP25	231847	3623510	102	2.82E-02	5.20E-01	3.78E-02	3.91E-02	6.68E-02	6.1	589	50	0.25

Table VII-2. Source Emissions and Stack Parameters for Arizona Clean Fuels Point Sources

Source ID	UTM Easting (m)	UTM Northing (m)	Elevation (m)	NO_X (g/s)	CO (g/s)	SO_2 (g/s)	PM_{10} (g/s)	VOC (g/s)	Stack Ht (m)	Temp (K)	Velocity (m/s)	Diameter (m)
EP26	232560	3623720	103	2.82E-01	5.20E-01	3.78E-02	3.91E-03	6.68E-02	6.1	589	50	0.25
EP27	231606	3623270	103	1.55E-01	1.31E-01	8.82E-03	1.13E-02	1.75E+00	22.9	533	25.9	1.52
EPCT01	232274	3623760	102	N/A	N/A	N/A	2.02E-02	4.23E-02	18.3	311	1.33	8.6
EPCT02	232286	3623760	102	N/A	N/A	N/A	2.02E-02	4.23E-02	18.3	311	1.33	8.6
EPCT03	232298	3623760	102	N/A	N/A	N/A	2.02E-02	4.23E-02	18.3	311	1.33	8.6
EPCT04	232311	3623760	102	N/A	N/A	N/A	2.02E-02	4.23E-02	18.3	311	1.33	8.6
EPCT05	232323	3623760	102	N/A	N/A	N/A	2.02E-02	4.23E-02	18.3	311	1.33	8.6
EPCT06	232274	3623770	102	N/A	N/A	N/A	2.02E-02	4.23E-02	18.3	311	1.33	8.6
EPCT07	232287	3623770	102	N/A	N/A	N/A	2.02E-02	4.23E-02	18.3	311	1.33	8.6
EPCT08	232298	3623770	102	N/A	N/A	N/A	2.02E-02	4.23E-02	18.3	311	1.33	8.6
EPCT09	232312	3623770	102	N/A	N/A	N/A	2.02E-02	4.23E-02	18.3	311	1.33	8.6
EPCT10	232323	3623770	102	N/A	N/A	N/A	2.02E-02	4.23E-02	18.3	311	1.33	8.6

Notes: 1 - Stack Height modeled at 65 meters.

2 - Evaluation of emission estimates for these sources resulted in revised pollutant concentrations. The concentrations presented here were input into confirmatory modeling files.

N/A = Not Applicable

Table VII-3. Source Emissions and Parameters for Arizona Clean Fuels Area Sources

Source ID	UTM Easting (m)	UTM Northing (m)	Release Height (m)	PM_{10} (g/s)	AAAQG VOC (g/s)	Area Width or Lateral Dimension (m)	Area Length or Vertical Dimension (m)
EPA1	231858	3623260	3	1.46E-05	2.06E-04	30.5	45.7
EPA2	232192	3623550	3	N/A	3.73E-05	76.2	152.4
EPA3	232512	3623550	3	N/A	1.28E-05	91.4	167.6
EPA4	232398	3623550	3	N/A	2.69E-05	91.4	167.6
EPA5	232663	3623550	3	N/A	2.00E-05	83.8	198.1
EPA6	232292	3623550	3	N/A	6.93E-07	76.2	121.9
EPA7	232793	3623550	3	N/A	9.86E-06	76.2	350.5
EPA8	232824	3623980	3	N/A	6.61E-06	76.2	106.7
EPA9	231423	3623450	3	N/A	2.81E-06	53.3	53.3
EPA10	231422	3623240	3	N/A	1.27E-05	53.3	167.6
EPA11	231476	3623330	3	N/A	2.12E-06	320.0	167.6
EPA12	232028	3623230	3	N/A	2.81E-06	365.8	266.7
EPA13	232392	3623440	3	N/A	1.51E-05	160.0	53.34
EPA14	232492	3623250	3	N/A	9.20E-06	243.8	152.4
EPA15	232451	3623340	3	N/A	2.41E-05	30.5	30.48
EPA16	232453	3623250	3	N/A	1.97E-05	30.5	60.96
EPA17	231477	3623109	3	N/A	6.69E-06	330.0	122.0

Notes: N/A = Not Applicable

Table VII-4. Source Emissions and Parameters for Arizona Clean Fuels Volume Sources

Source ID	UTM Easting (m)	UTM Northing (m)	Release Height (m)	PM_{10} (g/s)	VOC (g/s)	Lateral Dimension (m)	Vertical Dimension (m)
EP-V10	231449	3623324	7.3	N/A	8.73E-01	22.0	6.79
EP-V11	231636	3623414	7.3	N/A	7.59E-01	54.0	6.79
EP-V12	232211	3623363	7.3	N/A	5.50E+00	72.6	6.79
EP-Road1 through Road21	too many to list	too many to list	3.66	2.01E-03	N/A	9.6	3.4
EP-Road22 through Road71	too many to list	too many to list	3.66	2.01E-03	N/A	6.2	3.4

3. Modeling Results

The following sections present the results and conclusions from the air quality impact analyses. The air quality concentrations that are predicted by the dispersion models are compared to various "action thresholds," including the Significant Impact levels (SILs), NAAQS, and PSD increments. Because the short-term NAAQS and PSD increments for all short-term averaging periods (1-hour through 24-hour averages) may be exceeded once per year, the dispersion models calculate both the highest (or "high-first-high") and the "high-second-high" ("H2H") short-term average concentrations. Given that the meteorological data used in the modeling analysis meet criteria established by the U.S. EPA to ensure a climatologically representative period (generally 5 years of National Weather Service data or 1 year of site-specific data), then the H2H concentration estimates are compared to the NAAQS and PSD increments. The meteorological data used in the Arizona Clean Fuels analysis did meet the U.S. EPA criteria, therefore the H2H concentration estimates were used in the NAAQS and PSD increment compliance analyses.

When determining if the proposed project exceeds the SILs, the highest modeled concentration must be used, and the extent of the Significant Impact Area (SIA) must be determined. This is because the "project only" modeling cannot determine how the ambient impacts from the proposed source overlap in time and space with other existing source impacts. Therefore, the only way to ensure that the proposed source impacts are insignificant at any potential modeled exceedance is to compare the highest modeled concentration to the SILs.

a. Class II Significant Impact Modeling and SIA

The results of the significant impact analysis (SIA) are shown in Table VII-5. The Permittee demonstrated that SO_2 and PM_{10} emissions had predicted maximum concentrations greater than the significant impact level (SIL) for all applicable averaging periods, and the maximum radius of impact for any pollutant/averaging interval was determined to be 7.5 km. Consequently, a full impact analysis was required for SO_2 and PM_{10}.

draft

Table VII-5. Maximum Air Quality Impacts from Arizona Clean Fuels Sources

Pollutant	Averaging Period	Maximum Project Impact [a] ($\mu g/m^3$)	Significant Impact Level ($\mu g/m^3$)	Exceed SIL?
NO_2	Annual	0.616 [b]	1	No
CO	1-hour	368	2000	No
	8-hour	170	500	No
SO_2	3-hour	97.9	25	Yes
	24-hour	37.6	5	Yes
	Annual	2.35	1	Yes
PM_{10}	24-hour	77.8	5	Yes
	Annual	1.39	1	Yes

[a] High first high value

[b] Value adjusted using the ambient ratio method (ARM)

b. Load-Screening Analysis

Three operating scenarios encompassing the anticipated range of normal operating conditions were modeled to determine worst case conditions. The three scenarios included the base case (100 percent capacity), the post maintenance outage case (95 percent capacity), and the reduced refinery throughput case (75 percent capacity). The results of the load screening analysis concluded that the base case, full capacity operation, was found to have the highest predicted impact on the ambient air for almost all criteria pollutant and averaging period combinations. Exceptions to this trend were determined for the 1-hour CO (maximum impact at 95 percent load), and annual average SO_2 concentration (maximum impact at 75 percent load).

c. Comparison of Arizona Clean Fuels Impacts with NAAQS and PSD Increments

The full impact analysis expanded the significant impact analysis by considering emissions from both the proposed project, as well as other sources in the SIA. Maximum modeled concentrations presented in the modeling report are presented in Table VII-6, and predicted ambient concentrations are compared to both the NAAQS and the Class II PSD increments. The NAAQS and PSD increment analyses were rerun by the Department using the corrected source and receptor grids data. The Department's revised NAAQS and PSD increment results are presented

draft

in Table VII-6.

The Permittee's NAAQS analysis demonstrated that ambient impacts are predicted to be less than the NAAQS. This conclusion was reaffirmed in the Department's results from the revised modeling analysis.

The Permittee's analysis demonstrated that all ambient impacts were below PSD Class II increments.

Table VII-6. Permittee PSD Class II Increment and NAAQS Analysis

Pollutant	Averaging Period	Modeled Impact[a] ($\mu g/m^3$)	PSD Increment ($\mu g/m^3$)	Background Conc ($\mu g/m^3$)	Total Concentration ($\mu g/m^3$)	NAAQS ($\mu g/m^3$)	UTME (m)	UTMN (m)
SO_2	3-hour	67.8	512	47.2	115.0	1300	232300	3624200
	24-hour	25.2	91	27.1	52.3	365	232360	3623989
	Annual	2.35	20	7.86	10.2	80	232310	3623990
PM_{10}	24-hour	12.4	30	68.2	80.6	150	231872	3623063
	Annual	1.33	17	30.3	31.6	50	232260	3623991

[a] Annual averaging period concentrations are high first high values; short term averages are high second high values
[b] Value adjusted using ARM

d. AAAQGs Analysis

One of the programs used to control air toxics emissions in Arizona is the AAAQG program. AAAQGs are residential screening values that are protective of human health, but they are not regulatory air quality standards. Annual AAAQGs have been developed for human carcinogens, and assume an exposure frequency of 365 days per year for 70 years. Twenty-four hour AAAQGs also protect against excessive exposure to carcinogens. One-hour AAAQGs were developed with the intent to protect the more sensitive members of the population, including children and the elderly.

AAAQG pollutant emissions can be categorized as either process or fugitive. Several methods were used to calculate AAAQG pollutant concentrations depending upon the emission unit. These include (1) sources with known emission rates of specific pollutants (e.g., SRU hydrogen sulfide emissions), (2) area and volume sources of fugitive VOCs in which a representative speciated pollutant profile was applied (e.g, propane emissions from the Group B tanks), (3) sources of inorganic pollutants which adhere onto particulate matter (e.g., crude unit

and vacuum unit heater aluminum emissions) , and (4) combustion source speciated VOC emissions (e.g., crude unit and vacuum unit heater acetaldehyde emissions).

Only the following AAAQG pollutants were modeled as directly emitted from each source: benzene, chlorine, chlorobenzene, ammonia, MTBE, chromium (VI), nickel, hydrogen chloride, hydrogen sulfide, nitric oxide and tetrachlorethane. All other AAAQG pollutants were modeled by multiplying the constituent percentage of an emission stream (either VOC or particulate) by ambient impact of VOC or particulate, as applicable. For example, if aluminum was estimated to constitute 10 percent of particulate emissions from combustion sources, the model-predicted PM_{10} impact from combustion sources was multiplied by 0.10 to obtain the ambient impact of aluminum.

The Permittee used many conservative assumptions in estimating emissions of these pollutants. Many of the AAAQG emission rates are based upon representative source profiles obtained through EPA's FIRE database, the CATEF database, or EPA's SPECIATE source profile for petroleum refineries. For some pollutants, more than one database contained a value for an individual pollutant's percentage of VOCs, and these values often differed (see Table 7-28 in the Permittee's Air Quality Impact Analysis Report). The Permittee used a conservative approach by using the maximum percentage of any value found in the database.

Conservative assumptions were also used to quantify the ambient impacts from the AAAQG pollutants. In many cases, the highest constituent percentage listed in the SPECIATE database was multiplied by the maximum model-predicted VOC or PM_{10} concentration, as applicable, to estimate the maximum concentration of a given AAAQG pollutant. If AAAQG conformance is demonstrated using this methodology, no further analysis was necessary.

Modeling output files were reviewed to ensure correct emission rates and other model input parameters were entered correctly, and maximum model-predicted reported concentrations were supported by the model output.

The Permittee's modeling report did not include the AAAQG VOC and PM_{10} modeling files for the combustion sources, so the Department conducted confirmatory modeling to determine the ambient concentration of VOC and PM_{10} AAAQG pollutants. The maximum model-predicted impacts were then multiplied by the percent VOC or PM_{10} content to obtain the pollutant-specific ambient impact. These

values were then compared with the concentrations reported in the modeling report. In most cases, the concentrations were not equal, but in no case did the remodeled concentration exceed the AAAQGs.

Additionally, for pollutants whose maximum model-predicted impacts as presented in the Permittee's modeling report were within a factor of 10 of the AAAQG for any averaging period, additional steps were taken by the Department to verify conformance. These pollutants included aluminum, cadmium, lead, mercury, silver, selenium, chlorine, phenol, formaldehyde, hydrogen sulfide, ammonia, and benzene. Only formaldehyde was found to be underestimated, by a factor of 1.8. Consequently, the ambient concentration was increased by this factor, and conformance with the AAAQG was still demonstrated.

The Permittee's final modeling report presented HAP ambient impacts and comparisons to the AAAQGs. All reported concentrations were high-first-high maximum concentrations. Table VII-7 presents the Permittee's results of both short term and the annual AAAQG analyses for 45 pollutants analyzed. The Permittee's modeling indicates that maximum predicted annual ambient concentrations of benzene was greater than the AAAQG value. All other concentrations were estimated by the Permittee to be below the AAAQG levels.

draft

Table VII-7. Arizona Clean Fuels Comparison to AAAQG for Compounds with Significant Emissions

Chemical	1-Hour Average		24-Hour Average		Annual Average	
	Modeled Concentration ($\mu g/m^3$)	AAAQG ($\mu g/m^3$)	Modeled Concentration ($\mu g/m^3$)	AAAQG ($\mu g/m^3$)	Modeled Concentration ($\mu g/m^3$)	AAAQG ($\mu g/m^3$)
Acetaldehyde	1.21E-01	6.30E+02	2.92E-02	1.70E+02	2.01E-03	4.50E-01
Aluminum	7.07E+01	4.50E+02	9.13E+00	1.20E+02	-	NL
Ammonia	2.49E+01	2.30E+02	4.97E-01	1.40E+02	-	NL
Antimony [4]	6.02E-03	1.50E+01	7.78E-04	4.00E+00	-	NL
Barium	9.28E-01	1.50E+01	1.20E-01	4.00E+00	-	NL
Benzene [5]	1.23E+02	1.70E+02	2.39E+01	4.40E+01	**9.94E-01**	1.40E-01
Benzo(a)pyrene	1.67E-04	6.70E-01	4.04E-05	1.80E-01	2.79E-06	4.80E-04
Cadmium	5.42E-02	7.70E-01	7.00E-03	2.00E-01	1.03E-04	5.60E-04
Chlorine	1.84E+01	2.50E+01	4.28E+00	1.20E+01	-	NL
Chlorobenzene	2.16E+00	1.10E+04	5.08E-07	2.80E+03	-	NL
Chromium	1.48E-02	1.50E+01	3.57E-03	4.00E+00	-	NL
Chromium (VI)	1.20E-03	1.70E-02	3.00E-05	4.40E-03	0.00E-05	1.20E-05
Cobalt	6.02E+00	NL (HAP)	7.78E-01	NL	1.14E-02	NL
Copper	1.09E-02	3.00E+00	2.64E-03	7.90E-01	1.82E-04	NL
Chrysene[1]	1.29E-04	NL	3.11E-05	NL	-	NL
Ethylbenzene	3.02E+01	4.50E+03	9.87E+00	3.50E+03	-	NL
Formaldehyde [6]	7.00E-01	2.50E+01	1.69E-01	1.60E+01	1.17E-02	7.60E-02
Fluoranthene[1]	1.54E-03	NL	3.72E-04	NL	-	NL
n-Hexane	5.22E+01	5.40E+03	1.70E+01	1.40E+03	-	NL
Hydrogen Chloride	1.88E-01	2.10E+02	4.07E-02	5.60E+01	-	NL
Hydrogen Sulfide	8.46E+01	1.80E+02	7.09E+00	1.10E+02	-	NL
Iron	3.36E-00	1.50E+02	4.34E-01	4.00E+01	-	NL
Isopropylbenzene (cumene)	1.06E+00	HAP	3.47E-01	NL	2.05E-02	NL
Lead[2]	2.23E-01	1.50E+00	2.88E-02	1.50E+00	4.23E-04	1.50E+00
Manganese	1.06E+00	2.50E+01	3.47E-01	7.90E+00	-	NL
Mercury	3.03E-01	1.50E+00	7.32E-02	4.00E-01	-	NL
Methyl t-butyl ether	3.41E+04	HAP	8.56E+03	NL	-	NL
Naphthalene	2.10E-02	6.30E+02	5.07E-03	4.00E+02	-	NL
Nickel	2.38E-03	4.50E-01	5.40E-04	1.20E-01	4.00E-05	2.10E-03
Nitric Oxide	3.18E+01	3.80E+02	7.34E+00	2.40E+02	-	NL
n-Octane	0.00E+00	1.50E+04	0.00E+00	1.20E+04	-	NL
n-Pentane	2.49E+01	1.90E+04	8.11E+00	1.40E+04	-	NL
Phenol	4.04E+01	3.20E+02	1.32E+01	1.50E+02	-	NL
Potassium[3]	3.55E-01	NL	4.59E-02	NL	-	NL
Propane	4.29E-02	5.40E+04	1.04E-02	1.40E+04	-	NL
Selenium	1.68E-00	6.00E+00	2.17E-01	1.60E+00	-	NL
Silver	1.33E-01	3.00E-01	1.71E-02	7.90E-02	-	NL
Styrene	1.37E+02	3.50E+03	4.48E+01	1.70E+03	-	NL
Sulfur[3]	6.06E+01	NL	7.82E+00	NL	-	NL
Tetrachloroethene	1.70E+00	1.30E+03	3.69E-01	6.40E+02	2.82E-02	1.70E+00

Draft

Table VII-7. Arizona Clean Fuels Comparison to AAAQG for Compounds with Significant Emissions

Chemical	1-Hour Average		24-Hour Average		Annual Average	
	Modeled Concentration ($\mu g/m^3$)	AAAQG ($\mu g/m^3$)	Modeled Concentration ($\mu g/m^3$)	AAAQG ($\mu g/m^3$)	Modeled Concentration ($\mu g/m^3$)	AAAQG ($\mu g/m^3$)
Toluene	7.52E+00	4.40E+03	2.46E+00	3.00E+03	-	NL
Trimethylbenzene (1,3,5-)	8.18E+01	1.40E+03	3.09E+01	9.90E+02	-	NL
Trimethylbenzene (1,2,4-)	2.51E+01	1.40E+03	8.18E+00	9.90E+02	-	NL
Trimethylpentane (2,2,4-)	2.31E+01	HAP	2.26E+01	NL	-	NL
Xylenes (total)	4.56E+00	5.40E+03	1.49E+010	3.50E+03	-	NL
Zirconium	2.29E-01	8.30E+01	2.96E-02	4.00E+01	-	NL

NL = No Listed Guideline

Bolded values are greater than the applicable AAAQG guideline.

1 – No individual guideline concentrations are provided for these chemicals, however, they are included as polycyclic organic matter.

2 – The AAAQG concentration listed is the NAAQS, which is a quarterly average. The quarterly averaged concentration would be significantly lower than the short term averages reported.

3 – These chemicals are included in the AAAQG list, however, no guideline concentrations are provided.

4 - The model predicted impact shown in the modeling report is not supported as the emission rate of antimony is shown to be zero; consequently, the ambient impact should be zero as well.

5 - Benzene concentrations shown in this table are not supported by findings during the Department's review. Then annual benzene impact was remodeled as discussed below. Revised annual benzene concentrations decreased from .0.994 $\mu g/m^3$ to 0.13 $\mu g/m^3$.

6 - Ambient impacts of formaldehyde shown here should be multiplied by a factor of 1.8.

Benzene:

The Permittee's modeling report showed that the predicted benzene concentration would exceed the annual AAAQG value of 0.14 $\mu g/m^3$ in the area beyond the process area boundary and beyond the property boundary. The Department's review of this analysis identified several errors and discrepancies that were corrected and changed by the Department before performing confirmatory modeling. These corrections and changes are as follows:

1) The Permittee's benzene emission rates for the Group B storage tanks and the tank farm thermal oxidizer stack (EP-16) were incorrect, apparently because the Permittee's contractor did not properly portray the venting configuration. For 240 hours each year, the thermal oxidizer does not operate. During this period, the subject benzene stream is vented to a co-located stack with no controls. Consequently, a new stack was added (EP-16r) with the same stack height as EP-16. The stack gas exit

temperature was assumed to be 100°F; the gas was assumed to exit at 1 m/sec, and the stack gas exit diameter was assumed to be 1 m.

For the short-term impact analysis, the emissions from the thermal oxidizer (EP-16) were "turned off" during this venting scenario as the uncontrolled emissions are mutually exclusive. The collocated stack (EP-16r) was modeled with uncontrolled benzene emissions of 0.28 lb/hr during this alternative operating scenario. During normal operations, EP-16 was modeled with a short-term benzene emission rate of 0.0055 lb/hr.

For the annual impact analysis, the emissions from the thermal oxidizer (EP-16) were modeled at the normal emission rate for 8,520 hours/yr (i.e., "turned off" for 240 hours/yr). The modeled annual benzene emission rates were 0.023 tons/yr for EP-16 and the 0.033 tpy for EP-16r.

2) EP-V10 was deleted, as these benzene emissions will occur through EP-16r as described above, and the emissions are not properly characterized as a volume source.

3) For each of the loading rack thermal oxidizers (EP-17 and EP-27), the short-term benzene emission rate is 0.0199 lb/hr, and the long-term benzene emission rate is 0.0065 tons/yr. These values are considerably lower than what was shown in the Permittee's modeling report.

4) Long-term benzene emissions from EP-V11 are 0.088 tons/yr, reflecting the correction described in item (1) above.

5) Benzene emissions from EP-V12 were changed to 0.125 lb/hr short-term and 0.367 tpy long-term, reflecting the correction described in item (1) above.

7) For all sources of fugitive benzene emissions due to equipment leaks, the Permittee's analysis did not take into account several VOC BACT provisions that arose after submittal of the modeling report. These provisions, most importantly the limits on percent leaking components, were incorporated into the Department's analysis.

The Department revised the benzene impact analysis based upon these comments and reran the analyses. The revised model-predicted impacts for the annual benzene concentration decreased from 0.994 $\mu g/m^3$ to 0.13 $\mu g/m^3$.

B. Additional Impacts Analysis

1. Growth Analysis

The growth analysis is performed to assess the impacts due to additional growth resulting from project, but not directly emitted from the project. The assessment is performed to ensure compliance with NAAQS and PSD increments. The Permittee performed a qualitative analysis of the impacts due to growth. A quantitative analysis was not performed due to the many uncertainties.

The Permittee proposes that more than 500 plant employees in three shifts will be needed for operation of the new facility. The Permittee anticipates that these employees will be drawn primarily from the existing population of Yuma. Additionally, the applicant anticipates that there would be some industrial and economic growth, promoted by the refinery, in the area surrounding the refinery.

Predicted increases in air emissions from this population influx are primarily a result of the increase in vehicle exhaust from the increase in traffic flow. An incremental increase in vehicle traffic in the area is expected to occur due to employee and product delivery travel. The projected increase in traffic levels, and subsequent impact on local air quality, have not been quantified as part of the submitted permit application, but it is unlikely that the air quality impacts from the vehicular traffic will change any of the air quality analysis conclusions. Therefore, the Department has concluded that a detailed growth analysis is not warranted.

2. Effects on Soils and Vegetation

A.A.C. R18-2-407.I.1 requires that the PSD permit application include an analysis of the impacts that emissions from the proposed facility and from secondary growth will have on soils and vegetation. The Permittee was unable to identify any specific sensitive soil and vegetation resources in the project vicinity through consultation with the Arizona Department of Game and Fish and the United States Fish and Wildlife Service. A comparison of the maximum predicted concentrations to the screening levels found in the U.S. EPA document, "A Screening Procedure for the Impacts of Air Pollution Sources on Plants, Soils, and Animals" (U.S. EPA 1980), none of the screening levels are exceeded. Therefore, the results indicate that the project will not adversely impact soils and vegetation in the area.

3. Visibility Impacts Analysis

A.A.C. R18-2-407.I.1 and R18-2-410 require that the PSD permit application include an analysis of the impacts that emissions from the proposed major source and from secondary growth will have on visibility. This requirement is separate

from the required Class I visibility impact analysis. The visibility analysis was conducted for one sensitive Class II wilderness area: the Muggins Mountains, located 32 km northwest of the proposed refinery. This analysis was performed using the VISCREEN model with maximum hourly emission rate inputs for directly emitted PM_{10}, NO_X, directly emitted NO_2. Emission rates of elemental carbon and directly emitted sulfate were assumed to be negligibly small.

For purposes of the Permittee's VISCREEN analysis, all project sources were assumed to contribute to a single plume. In reality, this assumption is likely to be conservative (i.e., over-predict plume visibility). Under certain combinations of stability class and wind speed, plumes emitted at different heights and with different dispersion characteristics (e.g., exhaust exit velocity, building or stack-tip induced downwash, and exhaust temperature) will not necessarily merge into a single coherent plume.

The Permittee's modeling report demonstrated that its impact would exceed the Class I visibility screening thresholds in the Muggin Mountains Class II Wilderness Area. The revised VISCREEN modeling results are shown in Table VII-8.

Table VII-8. Level II VISCREEN Analysis Inputs and Results

Input Emission Rates								
PM					5.00 g/s			
NO_X (as NO_2)					6.69 g/s			
Primary NO_2					1.14 g/s			
Soot					0.00 g/s			
Primary SO_4					0.00 g/s			
Transport Scenario Specifications								
Background Ozone					0.08 ppm			
Background Visual Range					218 km			
Source-Observer Distance					32 km			
Minimum Source-Class I Distance					32 km			
Maximum Source-Class I Distance					40 km			
Plume-Source-Observer Angle					11.25 degrees			
Stability Class					F			
Wind Speed					2.5 m/s			
Maximum Visual Impacts Inside Muggins Mountain Class II Wilderness Area								
					ΔE		Contrast	
Background	Theta	Azimut	Distanc	Alpha	Criteria	Plume	Criteria	Plume
SKY	10	133	40	36	2	1.968	0.05	0.04
SKY	140	133	40	36	2	0.646	0.05	-0.016
TERRAIN	10	84	32	84	2	4.892	0.05	0.032
TERRAIN	140	84	32	84	2	0.235	0.05	0.003

draft

C. Class I Area Impacts Analysis

The Permittee has not performed a detailed analysis of Class I area impacts for the proposed Mohawk project site, which is located 191 km from the nearest Class I area, Joshua Tree National Park. The previous Class I area analysis demonstrated impacts below levels of concern when the project was originally proposed near Mobile, Arizona, only 88 km from the nearest Class I area (Superstition Wilderness). The Department considers the prior analysis for the Mobile site to provide adequate demonstration that the proposed project, located at the Mohawk site, will not cause or contribute to unacceptable impacts at any Class I area.

D. Conclusions

The Permittee has adequately demonstrated that the proposed project will not cause or contribute to an exceedance of any NAAQS or PSD increment, will conform with all AAAQGs, and will not cause any unacceptable adverse impacts on soils, vegetation, or visibility.

draft

VIII. INSIGNIFICANT ACTIVITIES

The following is a list of general activities that may occur at the proposed facility which fall under the definition of "Insignificant Activities" pursuant to A.A.C. R18-2-101(57), or "Trivial Activities" pursuant to A.A.C. R18-2-101(117).

A. Landscaping, building maintenance, or janitorial activities (R18-2-101(57)(a)).

B. Manually-operated equipment used for buffing, carving, cutting, drilling, machining, routing, sanding, sawing, surface grinding or turning and associated venting hoods (R18-2-101(57)(f)).

C. Chemical Laboratories including lab equipment used exclusively for chemical and physical analysis (R18-2-101(57)(i)).

D. Fuel burning equipment rated at less than 0.5 MMBtu/hr (R18-2-302(B)(2)(b)(v)). Such equipment includes gas-fired space heaters, hot water heaters, and process boilers. Specific equipment, model numbers, maximum potential heat rates, and site locations are not available at the present time (R18-2-101(57)(j)).

E. Additional Insignificant Sources. The following is a listing of additional equipment or activities which the Department has determined to be insignificant.

1. Petroleum product storage tanks and associated loading operations for lubricating oil, transformer oil, and used oil (R18-2-101(57)(j)).
2. Piping of fuel oils, used oil and transformer oil (R18-2-101(57)(j)).
3. Storage and handling of drums or other transportable containers where the containers are sealed during storage, and covered during loading and unloading (R18-2-101(57)(j)).
4. Water and Wastewater Treatment (R18-2-101(57)(j)):
   a. Water treatment or storage systems for boiler feedwater.
   b. Water treatment or storage or cooling systems for process water.
   c. Chemical storage associated with water and wastewater treatment where the water is treated for consumption or is used within the permitted facility.
5. Individual flanges, valves, pump seals, pressure relief valves, and other individual components not in VOC, organic HAP, or H_2S service (R18-2-101(57)(j)).
6. Cafeterias, kitchens, and other facilities used for food or beverage preparation. (R18-2-101(117)(d)).
7. Equipment using water, water and soap or detergent, or a suspension of abrasives in water for purposes of cleaning or finishing.
8. Battery recharging areas (R18-2-101(117)(r)).
9. Aerosol can usage (R18-2-101(57)(j)).
10. Acetylene, butane, and propane torches (R18-2-101(57)(j)).
11. Equipment used for portable steam cleaning. (R18-2-101(117)(xx)).
12. Blast-cleaning equipment using a suspension of abrasive in water and any exhaust system or collector serving them exclusively (R18-2-101(57)(j)).
13. Lubricating system reservoirs (R18-2-101(57)(j)).
14. Hydraulic system reservoirs (R18-2-101(57)(j)).
15. Adhesive use (R18-2-101(57)(j)).

draft

16. Production of hot/chilled water for onsite use (R18-2-101(57)(j)).
17. Safety devices such as fire extinguishers (R18-2-101(57)(j)).
18. General vehicle maintenance and servicing activities (R18-2-101(57)(j)).
19. Storage cabinets for flammable products (R18-2-101(57)(j)).
20. Office/Administration:
    a. Housekeeping activities and associated products for cleaning purposes and operation of vacuum cleaning systems (R18-2-101(57)(j)).
    b. Air conditioning, cooling, heating or ventilation equipment (R18-2-101(117)(b) and (c)).
    c. General office activities such as paper shredding, copying, photographic activities, and blueprinting (R18-2-101(57)(j)).
    d. Restroom facilities and associated cleanup operations, stacks, and vents (R18-2-101(117)(h)).
    e. Smoking rooms and areas (R18-2-101(117)(j)).
    f. Normal consumer use of consumer products, including hazardous substances as defined in the Federal Hazardous Substances Act (15 U.S.C. 1261 et. seq.) (R18-2-101(57)(j)).
21. Firefighting activities and training conducted at the facility in preparation of fighting fires. The various components of this fire fighting system include (R18-2-101(57)(j)):
    a. Foam System Fire Water Systems
    b. Dry Chemical Extinguisher
22. Rail car traffic and locomotive switching activities (R18-2-101(57)(j)).

draft

IX. ABBREVIATIONS AND ACRONYMS

AAAQG . . . . . Arizona Ambient Air Quality Guideline
A.A.C. . . . . Arizona Administrative Code
Arizona Clean Fuels . . . . . Arizona Clean Fuels
ADEQ . . . . . Arizona Department of Environmental Quality
ADEQ MG . . . . . Arizona Department of Environmental Quality Modeling Guidelines
AGO . . . . . Atmospheric Gas Oil
ANSI . . . . . American National Standards Institute
API . . . . . American Petroleum Institute
AQRV . . . . . Air Quality Related Value
ARM . . . . . Ambient Ratio Method
ASME . . . . . American Society of Mechanical Engineers
BAAQMD . . . . . Bay Area Air Quality Management District
BACT . . . . . Best Available Control Technology
BLM . . . . . Bureau of Land Management
Btu . . . . . British Thermal Unit
Btu/scf . . . . . British Thermal Unit per Standard Cubic Foot
ºC . . . . . Degrees Celsius
CAM . . . . . Compliance Assurance Monitoring
CARB . . . . . California Air Resources Board
CEMS . . . . . Continuous Emission Monitoring System
CFR . . . . . Code of Federal Regulations
CO . . . . . Carbon Monoxide
DAF . . . . . Dissolved Air Flotation
DEM . . . . . ERL-Athens Dynamic Estuary Model
dscf/MMBtu . . . . . Dry Standard Cubic Feet per Million British Thermal Unit
ºF . . . . . Degrees Fahrenheit
FLAG . . . . . Air Quality Related Values Workgroup
FLM . . . . . Federal Land Manager
FR . . . . . Federal Register
GAQM . . . . . Guideline on Air Quality Models
GEP . . . . . Good Engineering Practice
gr/dscf . . . . . Grains per Dry Standard Cubic Foot
g/s . . . . . Gram per Second
HAP . . . . . Hazardous Air Pollutant
HF . . . . . Hydrogen Fluoride
H_2S . . . . . Hydrogen Sulfide
HHV . . . . . Higher Heating Value
HON . . . . . Hazardous Organic NESHAP
HVGO . . . . . Heavy Vacuum Gas Oil
ISC . . . . . Industrial Source Complex
ISCST3 . . . . . Industrial Source Complex 3 Short Term Model
IWAQM . . . . . Interagency Workgroup on Air Quality Modeling
K . . . . . Kelvin

draft

kg/ha-yr . . . . . Kilograms per Hectare per Year
km . . . . . Kilometers
kPa . . . . . Kilopascals
LAER . . . . . Lowest Achievable Emission Rate
lb . . . . . Pound
lb/hr . . . . . Pound per Hour
lb/MMBtu . . . . . Pound per Million British Thermal Unit
LDAR . . . . . Leak Detection and Repair
LPG . . . . . Liquified Petroleum Gas
LVGO . . . . . Light Vacuum Gas Oil
m . . . . . Meter
MDEA . . . . . Methyl Diethanolamine
$\mu g/m^3$ . . . . . Microgram per Cubic Meter
MMBtu . . . . . Million British Thermal Unit
MMBtu/hr . . . . . Million British Thermal Unit per Hour
mmHg . . . . . Millimeters of Mercury
m/s . . . . . Meter per Second
NAAQS . . . . . National Ambient Air Quality Standard
NESHAP . . . . . National Emission Standards for Hazardous Air Pollutants
NH_3 . . . . . Ammonia
NO . . . . . Nitrogen Oxide
NO_2 . . . . . Nitrogen Dioxide
NO_x . . . . . Nitrogen Oxides
NSCR . . . . . Non-Selective Catalytic Reduction
NSPS . . . . . New Source Performance Standard
O_2 . . . . . Oxygen (Molecular)
O_3 . . . . . Ozone
OAQPS . . . . . Office of Air Quality Planning and Standards
OSBL . . . . . Outside Battery Limits
OSHA . . . . . Occupational Safety and Health Administration
PM . . . . . Particulate Matter
PM_{10} . . . . . Particulate Matter less than 10 Microns
ppm . . . . . Parts per Million
ppmv . . . . . Parts per Million by Volume
ppmvd . . . . . Part per Million by Volume, Dry Basis
ppmw . . . . . Parts per Million by Weight
PSA . . . . . Pressure-Swing Adsorption
PSD . . . . . Prevention of Significant Deterioration
psia . . . . . Pressure per Square Inch Absolute
psig . . . . . Pressure per Square Inch Gauge
PSM . . . . . Process Safety Management
RACT . . . . . Reasonable Available Control Technology
RBLC . . . . . RACT/BACT/LAER Clearinghouse
RFG . . . . . Refinery Fuel Gas
ROI . . . . . Radius of Impact

draft

RON . . . . . Research Octane Number
SCAQMD . . . . . South Coast Air Quality Management District
SCR . . . . . Selective Catalytic Reduction
SIA . . . . . Significant Impact Area
SIC . . . . . Standard Industrial Code
SIL . . . . . Significant Impact Level
SNCR . . . . . Selective Non-Catalytic Reduction
SO_2 . . . . . Sulfur Dioxide
SO_x . . . . . Sulfur Oxides
SOCMI . . . . . Synthetic Organic Chemical Manufacturing Industry
SRP . . . . . Sulfur Recovery Plant
SRU . . . . . Sulfur Recovery Unit
SWS . . . . . Sour Water Stripper
TGTU . . . . . Tail Gas Treatment Unit
TNRCC . . . . . Texas Natural Resources Conservation Commission
TOC . . . . . Total Organic Compounds
UAM . . . . . Urban Airshed Model
U.S. EPA . . . . . United States Environmental Protection Agency
USGS . . . . . United States Geological Survey
UTM . . . . . Universal Transverse Mercator
UTME . . . . . UTM Easting
UTMN . . . . . UTM Northing
VOC . . . . . Volatile Organic Compounds
VOL . . . . . Volatile Organic Liquid
WWTP . . . . . Wastewater Treatment Plant

draft

X. RESPONSES TO PRELIMINARY U.S. EPA COMMENTS

The Department on October 7, 2003 provided U.S. EPA Region IX with preliminary draft copies of the proposed Class I Permit and Technical Support Document for the Arizona Clean Fuels Yuma, LLC petroleum refinery. The Department received comments from U.S. EPA Region IX staff both verbally, during several teleconferences over a six-month period, and via electronic mail. This section of the Technical Support Document summarizes the comments, the Department's responses to the comments, and the changes made to the proposed permit and Technical Support Document as a result of the comments.

The comments received from U.S. EPA Region IX, when introducing suggested changes to the draft permit or the draft Technical Support Document, occasionally use the word "must." More frequently, the word "should" is used, and in some instances, the comment is made without any comparable verb. The distinctions between this usage are not explained in U.S. EPA's comments. Therefore, for the purpose of preparing these responses, the Department has presumed that all comments which suggest changes to the permit have been provided for the purpose of conveying U.S. EPA's interpretation that the Department's proposed permit is legally deficient.

A. Process Heater NO_X Emissions

1. Heaters for which SCR is not Required

a. U.S. EPA's comment: *Low-NOx burners and SCR proposed for only seven of eighteen refinery process heaters. Unclear what distinction made between two groups that led to elimination of SCR as BACT for several process heaters.*

Department's response: The Department did not explicitly or purposely categorize the process heaters into two groups for the purposes of the NO_X BACT determination. Instead, the Department evaluated each process heater individually.

As discussed in detail in Section V.B.3 herein, for each of the eighteen process heaters, the Department identified the use of SCR plus combustion controls as the most effective of the technically feasible control options, and combustion controls without SCR as the second most effective option. In its initial permit application, the applicant proposed to use only combustion controls for all eighteen process heaters. The Department determined that the information provided by the applicant did not justify the rejection of SCR as BACT in all cases, and requested that the applicant provide additional documentation to support its proposal. In its revised permit application, the applicant proposed the top control option as BACT for seven of the process heaters, so there was no need for the Department to perform a detailed review of the beneficial or adverse economic, energy, or environmental impacts of any identified control options for NO_X emissions from these

heaters. For the other eleven process heaters, the applicant again proposed to use only combustion controls. For each of these eleven heaters, the Department conducted a detailed evaluation of the beneficial and adverse economic, energy, and environmental impacts of both the top control option and the second most effective control option. Based on the results of this evaluation, the Department determined that the control option proposed by the applicant represented BACT for NO_X emissions from each of these eleven process heaters.

In summary, there are two distinctions between the heaters for which the proposed BACT determination requires SCR and those for which it does not: First, SCR is more cost-effective (i.e., a given expenditure will achieve greater NO_X emission reduction) for the heaters for which SCR is proposed. Second, the applicant proposed the top control option as BACT for NO_X emissions from certain of the process heaters, and the Department elected not to review less effective control options in detail for those process heaters.

b. U.S. EPA's comment: *The Region considers that the evaluation of the top NO_X control option in this case should be based primarily on average cost effectiveness, and that basing the BACT decision predominantly on incremental cost effectiveness rather than average cost effectiveness is more appropriate for modified existing emission units than for new emission units.*

Department's response: The Department is not aware of any provision in the PSD program that would support either of the opinions set forth in this comment.

The Department emphatically states that its preliminary BACT determination for NO_X emissions from each process heater was not based primarily or predominantly on the incremental cost effectiveness, or on any other single factor, for any particular control option. Instead, as described in detail in Section V.B.3 herein, the Department's preliminary BACT determinations are based on consideration of all beneficial and adverse economic, energy, and environmental impacts of both control options under consideration. For each of the eleven process heaters for which the Department has proposed not to require the use of SCR, the Department determined that the adverse impacts (including, but not limited to, ammonia emissions and capital and operating costs) outweigh the beneficial impact (reduced NO_X emissions).

Cost effectiveness, generally expressed in dollars per ton of emission reduction, is a unit of measure that provides a comparison of the adverse economic impacts (i.e., capital and operating costs) and the beneficial environmental impact (i.e., air pollutant emission reduction) of a control

option being evaluated. Cost effectiveness does not take into account any beneficial or adverse energy impacts or any adverse environmental impacts of a control option so, by itself, cannot be used to satisfy the statutory requirement for consideration of all economic, energy, and environmental impacts. For any control option, the "average" or "total" cost effectiveness is the ratio of total costs to total emission reduction, as compared to some "baseline." In BACT analyses where at least two identified control options are more effective than the baseline, a separate "incremental" cost effectiveness of a more effective control option can be calculated. This value is the ratio of the incremental costs of the more stringent control option to the incremental emission reduction achieved by the more stringent control option, as compared to a less stringent control option. In the BACT analyses at issue here, the more stringent control option is use of SCR plus combustion controls and the less stringent control option is combustion controls without SCR. For the eleven process heaters for which the Department's proposed NO_X BACT determination would not require SCR, the Department did calculate and consider both the average cost effectiveness and the incremental cost effectiveness of the top control option before deciding to reject this control option. For reasons that are described in greater detail in the response to the next comment, the Department in this instance gave greater weight to the incremental cost effectiveness than to the average cost effectiveness.

The Department notes that the Clean Air Act expressly leaves to the State, acting as the permitting authority, the responsibility to consider the economic, energy, and environmental impacts and other costs of each control option being considered. (See, for example, CAA § 169(3).) The intent of the congress in crafting this statutory provision is described in the Senate Report as follows:

"The decision regarding the actual implementation of best available technology is a key one, and the [Senate Environment and Public Works Committee] places this responsibility with the State, to be determined in a case-by-case judgment. It is recognized that the phrase has broad flexibility in how it should and can be interpreted, depending on site. In making this key decision on the technology to be used, the State is to take into account energy, environmental, and economic impacts and other costs of the application of best available control technology. The weight assigned to such factors is to be determined by the State."

The Department recognizes that U.S. EPA Region IX, in cases where it acts as the permitting authority for PSD permitting actions, as on Indian Lands in Arizona, it has the responsibility to determine weight assigned to the various factors (i.e., impacts) that are required by the statute to be considered. In those permitting actions, when considering and

considering the impacts, U.S. EPA Region IX may, as a matter of policy, elect to quantify certain of the impacts using only specified units of measurement and may elect to give greater weight to certain types of impacts. Based on the comments that the Department received on the draft permit for the proposed refinery, it appears that U.S. EPA Region IX, as a matter of policy, has elected, when evaluating BACT for new major stationary sources, to give relatively great weight to the average cost effectiveness of each identified control option. The Department has determined that any such policy, if it exists, is in no way binding on the Department's BACT determinations, either for new major stationary sources or for major modifications at existing sources.

The Department also recognizes that U.S. EPA has oversight authority for the Department's implementation of the PSD program. This oversight authority is expressly provided by §§ 113(a)(5) and 167 of the Clean Air Act and was recently upheld by the U.S. Supreme Court in *Alaska Department of Environmental Conservation v. Environmental Protection Agency et al*. However, this oversight authority does not extend to imposition of prescriptive policies regarding the proper weighting of the several factors, or regarding the proper units of measurement for quantifying the impacts being considered. Instead, U.S. EPA's oversight authority is limited to ensuring that the Department's BACT determinations conform to the two core criteria identified by U.S. EPA for making BACT determinations consistent with the statutory requirements. These core criteria are (1) consideration of the most stringent control technologies available, and (2) a reasoned justification, considering "energy, environmental and economic impacts and other costs," of any decision to require less than the "maximum degree of reduction" in emissions. The Department's proposed BACT determinations, including its proposed BACT determination for NO_X emissions from the eleven heaters for which SCR is not required, conform to these core criteria.

As a result of this comment from U.S. EPA, and recognizing that this information may be useful and informative to other agencies conducting NO_X BACT analyses in the future, the Department revised Section V.B.3 of the Technical Support Document to include additional information characterizing the economic impacts of the top control option as considered and rejected for eleven of the process heaters.

c. U.S. EPA's comment: *The Region considers $10,000 per ton to be an appropriate threshold for average cost effectiveness for NO_X BACT analyses.*

Department's response: The Department is not aware of any provision in the PSD program that would support the opinion set forth in this

comment. As indicated in the Department's response to the previous comment, the oversight authority exercised by U.S. EPA in PSD permitting actions undertaken by the Department does not extend to imposition of prescriptive policies regarding the proper weighting of the several factors that are required to be considered, or regarding the proper units of measurement for quantifying the impacts being considered. Assuming that the Department has interpreted this comment correctly, this comment would suggest precisely that: Since U.S. EPA Region IX applies a $10,000 per ton threshold for average cost effectiveness when it acts as the permitting authority in making NO_X BACT determinations, the Department should do likewise. The Department strongly disagrees with this comment in principle.

As a result of this comment from U.S. EPA Region IX, the Department conducted a brief review of pertinent U.S. EPA guidance and of BACT determinations recently made by other permitting authorities for NO_X emissions from petroleum refinery combustion sources. The Department conducted this review because, although it has the sole responsibility to determine the weighting afforded each of the several factors required to be considered, it would be inappropriate for any BACT decision to be made entirely in a vacuum. The results of this review fully support all of the Department's proposed BACT determinations for NO_X emissions from process heaters.

(1) Cost Effectiveness of Proposed Arizona Clean Fuels Process Heaters

For the purposes of facilitating and simplifying the comparison of the Department's proposed BACT determinations with other States' BACT determinations for NO_X emissions from petroleum refinery combustion sources, the Department has identified the Hydrocracker Unit heaters at the proposed refinery as the heaters that will provide the most meaningful comparison. These heaters will exhaust through a common stack and, if equipped with SCR, would likely be served by a common SCR system. Thus, for the purposes of comparison with other combustion sources for which NO_X BACT determinations have been made, these two heaters can be evaluated as a single unit. This unit has a maximum heat input capacity of 281.1 MMBtu/hr, which is larger than any of the other process heaters for which the Department's proposed NO_X BACT determination would not require SCR. Primarily as a result of its size and its uncontrolled emissions, this unit could be equipped with SCR more cost effectively than the other process heaters for which the Department's proposed NO_X BACT determination would not require SCR. The projected annualized costs and achievable NO_X emission reductions for

each identified control option for this unit are summarized in the following table. Although the Department did not conduct a detailed economic analysis for a high-efficiency SCR system capable of achieving 0.0085 lb/MMBtu, for reasons that are discussed in detail in Section V.B.3 herein, the Department has assumed for the purposes of this comparative review that the costs of such a system would be identical. (This assumption is conservative, because both catalyst replacement costs and ammonia costs would likely be somewhat higher, but this conservatism is immaterial for this analysis.)

Control Option	NO_X Level (lb/MMBtu)	Emissions (tons/yr)	Annualized Cost ($/yr)	Average Cost Effectiveness ($/ton)	Incremental Cost Effectiveness ($/ton)
CC+SCR	0.0085	10.5	474,000	1,850	20,300
CC+SCR	0.0125	15.4	474,000	1,880	25,800
CC	0.02725	33.5	6,000	26	n/a
baseline	0.217	267.2	0	n/a	n/a

(2) Cost Effectiveness for Kansas Refinery

The first of the NO_X BACT determinations to which the Department compared its proposed NO_X BACT determinations is embodied in a PSD permit issued by the Kansas Department of Health and Environment (KDHE) to the NCRA refinery in McPherson, Kansas on January 6, 2003. This PSD permit included a new Unicracking Unit that includes a 212 MMBtu/hr Unicracking Unit Heater. The KDHE NO_X BACT determination for this heater is an emission limit of 0.026 lb/MMBtu, based on the use of combustion controls without SCR. The KDHE, like the Department, identified the use of combustion controls with SCR as the top control option and documented the rationale for its decision not to require that option as BACT. The cost and emissions data presented by the applicant and relied upon by KDHE are summarized in the following table:

draft

Control Option	NO_X Level (lb/MMBtu)	Emissions (tons/yr)	Annualized Cost ($/yr)	Average Cost Effectiveness ($/ton)	Incremental Cost Effectiveness ($/ton)
CC+SCR	0.0085	7.9	546,000	14,189	20,768
CC	0.026	24.1	209,000	9,392	n/a
baseline	0.05	46.4	0	n/a	n/a

Obviously, the incremental cost effectiveness of the top NO_X control option for the heater at the NCRA refinery in Kansas is nearly identical to that for the Hydrocracker Unit heaters at the proposed Arizona Clean Fuels refinery, as would be expected for heaters of similar size. However, the average cost effectiveness values are not at all similar. This dissimilarity is attributable to two factors: the costs associated with combustion controls are projected to be 30 times higher at the Kansas heater than at the proposed Arizona Clean Fuels refinery, and the baseline NO_X emission level for the Kansas heater is less than one-fourth as high. The projected costs of combustion controls at the Kansas heater are based on the actual costs of a retrofit installation at a facility in Texas and, thus, are probably too high to be representative. The Department considers the cost figure provided for the proposed Arizona Clean Fuels refinery to be more representative of the costs for combustion controls that are integrated into the design of a new process heater. However, the cost of combustion controls was not a significant factor in the Department's decision regarding BACT for NO_X emissions from the Hydrocracker Unit heaters, or any other process heaters, at the proposed Arizona Clean Fuels refinery. Because the applicant proposed to use process heaters with integral combustion controls, and because combustion controls are a part of both of the NO_X control options under consideration, the Department considers it counterintuitive to give significant weight to the costs of these combustion controls when deciding whether SCR should be required as part of the BACT control option.

The Department considers the second factor, the significantly different baseline emission rates used for the Kansas heater and the proposed Arizona Clean Fuels process heaters, to be a result of the inherently arbitrary nature of the baseline emission rate selection. The term "baseline emission rate" is defined by at least one U.S. EPA guidance document to represent "a realistic scenario of upper bound uncontrolled emissions for the source."

draft

The Department finds this definition to be vague, ambiguous, and conducive to arbitrariness. As noted in Section V.B.3 herein, the Department based its estimate of each process heater's baseline emission rate (0.217 lb/MMBtu) loosely on the estimated uncontrolled emissions for a process heater as documented in a 1993 U.S. EPA publication. Because the applicant has proposed to equip each of its process heaters with burners capable of achieving NO_X emissions of approximately 0.03 lb/MMBtu, the Department does not consider its estimate of baseline emission rate to be realistically representative of the emissions from these heaters. However, the Department also does not consider the baseline emission rate of 0.05 lb/MMBtu used in the Kansas BACT analysis to be any more representative. Instead, the Department considers the selection of a baseline NO_X emission rate for a refinery process heater to be inherently arbitrary. For this reason, and because the calculation of average cost effectiveness is inextricably linked to the selection of a baseline emission rate, the Department has elected to give very little weight to the average cost effectiveness when making its decision regarding NO_X BACT for process heaters at the proposed Arizona Clean Fuels refinery.

In closing, the Department notes that, if the NO_X BACT analysis for the Hydrocracker Unit heaters were performed using the costs presented above, and the baseline emission rate used in the Kansas BACT analysis, the average cost effectiveness of the top control option would be approximately $10,000 per ton. If the analysis were revised to include an additional $200,000 per year in combustion control costs, consistent with the Kansas BACT analysis, and also using the baseline emission rate used in the Kansas BACT analysis, the average cost effectiveness would be approximately $15,000 per ton.

(3) Cost Effectiveness for Oklahoma Refinery

The second of the NO_X BACT determinations to which the Department compared its proposed NO_X BACT determinations is embodied in a PSD permit issued by the Oklahoma Department of Environmental Quality (ODEQ) to the Conoco refinery in Ponca City, Oklahoma on July 1, 2002. This PSD permit included four new process heaters, ranging in size from 33 to 149 MMBtu/hr, and a new 483 MMBtu/hr boiler. The ODEQ NO_X BACT determination for each of these combustion sources is an emission limit of 0.035 lb/MMBtu, based on the use of combustion controls without SCR. The ODEQ, like the Department, identified the use of combustion controls with SCR

as the top control option and documented the rationale for its decision not to require that option as BACT. The cost and emissions data presented and relied upon by ODEQ in determining NO_X BACT for the new 483 MMBtu/hr boiler are summarized in the following table:

Control Option	NO_X Level (lb/MMBtu)	Emissions (tons/yr)	Annualized Cost ($/yr)	Average Cost Effectiveness ($/ton)	Incremental Cost Effectiveness ($/ton)
CC+SCR	0.0085	18.0	748,000	4,943	not provided
CC	0.035	74.1	not provided	not provided	n/a
baseline	0.08	169.3	0	n/a	n/a

The NO_X BACT analysis documented by ODEQ did not include any cost information for the control option proposed by the applicant, so the average cost effectiveness of that control option and the incremental cost effectiveness of the top control option cannot be determined by the Department.

The average cost effectiveness value cited by ODEQ is, not surprisingly, very dissimilar to the average cost effectiveness values for both the Kansas refinery and the proposed Arizona Clean Fuels refinery. This dissimilarity is attributable, at least in part, to the fact that the baseline NO_X emission level is much lower than that selected by the Department and much higher than that selected by KDHE. Again, the Department considers these differences to be a result of the inherently arbitrary nature of the baseline emission rate selection, and further justification for the Department's decision to give very little weight to the average cost effectiveness when making its decision regarding NO_X BACT for process heaters at the proposed Arizona Clean Fuels refinery.

In closing, the Department notes that, if the NO_X BACT analysis for the Hydrocracker Unit heaters were performed using the costs presented above, and the baseline emission rate used in the Oklahoma BACT analyses, the average cost effectiveness of the top control option would be approximately $6,000 per ton.

(4) Cost Effectiveness for Washington Refinery

The third of the NO_X BACT determinations to which the Department compared its proposed NO_X BACT determinations

is embodied in a PSD permit issued by the Washington Department of Environment (WDOE) to the BP Cherry Point refinery in Washington on May 15, 2003. This PSD permit included a new 362 MMBtu/hr boiler. The WDOE NO_X BACT determination for this boiler is an emission limit of 0.018 lb/MMBtu, based on the use of combustion controls without SCR. The WDOE, like the Department, identified the use of combustion controls with SCR as the top control option. The WDOE appears to have based its BACT decision primarily on a determination that the incremental cost effectiveness of the top control option is "clearly cost prohibitive as compared to only using [combustion controls]." The cost and emissions data presented and relied upon by WDOE in determining NO_X BACT for the new boiler are summarized in the following table:

Control Option	NO_X Level (lb/MMBtu)	Emissions (tons/yr)	Annualized Cost ($/yr)	Average Cost Effectiveness ($/ton)	Incremental Cost Effectiveness ($/ton)
CC+SCR	0.0085	13.5	1,086,710	10,792	66,735
CC	0.018	28.5	85,680	1,000	n/a
baseline	0.07	114.2	0	n/a	n/a

Both the average and incremental cost effectiveness values cited by WDOE are largely inconsistent with those used by the Department in making its preliminary NO_X BACT determinations for process heaters at the proposed Arizona Clean Fuels refinery. These dissimilarities are attributable to three factors: the size-adjusted costs of both combustion controls and SCR are projected to be much higher for the Washington boiler than for the proposed Arizona Clean Fuels process heaters, and the baseline NO_X emission level for the Washington boiler is sixty percent lower. The projected costs of combustion controls at the Washington boiler include flue gas recirculation, which is not technically feasible for petroleum refining process heaters, so this apparent discrepancy can be explained by technical differences between the two emission units.

The projected costs of SCR for the Washington boiler are much higher than those for the heaters at the proposed Arizona Clean Fuels refinery because the former include an estimated annualized cost of $600,000 for scrubbing of SO_2 emissions from the exhaust gas. The applicant claimed that the scrubbing system would be necessary in order to avoid fouling of the air heater due

to ammonium sulfate formation in the SCR system because the fuel gas at this refinery has a sulfur content in excess of 0.02 grains per dry standard cubic foot. However, this also is true for the proposed Arizona Clean Fuels refinery and, based on information available to the Department, this is generally true for the fuel gases burned at all petroleum refineries. The Department determined that SCR has been demonstrated to function efficiently, without upstream scrubbing, and notwithstanding the expected fuel gas sulfur levels in excess of 0.02 grains per dry standard cubic foot, on a variety of combustion sources in petroleum refineries. This effectively indicates that the Department made a determination of technical feasibility that is different from the determination made by WDOE for an apparently very similar source. For the purposes of comparing the cost effectiveness values for the Washington boiler and the proposed Arizona Clean Fuels process heaters, this discrepancy must be resolved by adjusting the costs to reflect consistent control equipment design and configuration. If the projected costs of the top control option for the Washington boiler are adjusted to exclude the $600,000/yr cost of a scrubber, and no adjustments are made to the baseline emission rate used by WDOE, the average cost effectiveness of this option is approximately $4,800 per ton, and the incremental cost effectiveness is $27,000 per ton.

Finally, as with the NO_X BACT determinations made by KDHE and ODEQ, the average cost effectiveness value for the Washington boiler is dissimilar to that for the heaters at the proposed Arizona Clean Fuels refinery, in part, because of the different baseline emission rates used by WDOE and by the Department. Again, the Department considers this difference to be a result of the inherently arbitrary nature of the baseline emission rate selection, and further justification for the Department's decision to give very little weight to the average cost effectiveness when making its decision regarding NO_X BACT for process heaters at the proposed Arizona Clean Fuels refinery. The Department notes that, if the NO_X BACT analysis for the Hydrocracker Unit heaters were performed using the costs presented above, and the baseline emission rate used in the WDOE BACT analyses, the average cost effectiveness of the top control option would be approximately $6,500 per ton.

(5) Cost Effectiveness in U.S. EPA's Presumptive NO_X BACT Analysis for Petroleum Refinery Process Heaters

In addition to the three NO_X BACT determinations made by

other States and described above, the Department also compared its preliminary NO_X BACT determinations for process heaters at the proposed Arizona Clean Fuels refinery to the presumptive NO_X BACT determinations recently made available by U.S. EPA's Office of Air Quality Planning and Standards.[11]

While again emphasizing that the applicable statutory and regulatory provisions leave to the Department the responsibility to consider and weigh the economic, energy, and environmental impacts and other costs of each control option being considered, the Department notes that it affords greater weight to the referenced policy document from the Director of U.S. EPA's Office of Air Quality Planning and Standards than to an undocumented policy expressed only verbally by staff members at U.S. EPA Region IX. The referenced policy document represents U.S. EPA's policy on a national basis and it was made available for public comment for nearly a year, via the agency's Internet web site, before being finalized. The agency's stated purpose in issuing this Federal guidance is to "set forth levels of control that, in [EPA's] view, would generally be considered to satisfy the BACT [] requirements for certain emission units and pollutants associated with required refinery desulfurization projects" and to "add certainty about EPA's general perspective and expectations as to the applicable technology requirements for BACT [] for types of refinery emissions units identified herein."

In preparing the referenced policy document, U.S. EPA identified SCR plus combustion controls as the top control option and combustion controls as the only other control option worthy of real consideration. This approach is consistent with the preliminary NO_X BACT determinations made by the Department and the final NO_X BACT determinations made by KDHE, ODEQ, and WDOE, as described previously. In addition, the presumptive NO_X BACT determinations made by U.S. EPA are based on an <u>incremental</u> cost effectiveness threshold of $10,000 per ton; this approach yields results that are generally consistent with the preliminary NO_X BACT determinations made by the Department and the final NO_X BACT determinations made by KDHE, ODEQ, and WDOE, as described previously, but it is in stark contrast with the apparent

[11] "Memorandum: BACT and LAER for Emissions of Nitrogen Oxides and Volatile Organic Compounds at Tier 2/Gasoline Sulfur Refinery Projects." J.S. Seitz, Director, U.S. EPA, Office of Air Quality Planning and Standards, to Air Division Directors, U.S. EPA Regions I-X. January 19, 2001.

policy of U.S. EPA Region IX.

The cost and emissions data presented and relied upon by U.S. EPA in determining the presumptive NO_X BACT for petroleum refinery process heaters are summarized in the following table. As is evident from these data, U.S. EPA's conclusions would have been drastically different if they had applied an upper cost effectiveness threshold of $10,000 per ton in terms of average cost effectiveness rather than incremental cost effectiveness: instead of determining that the presumptive NO_X BACT would require SCR for five out of ten model heaters evaluated, they would have concluded that SCR should be required for all ten model heaters, even including heaters of only 10 MMBtu/hr heat input capacity.

Model	Control Option	NO_X Level (lb/MMBtu)	Emissions (tons/yr)	Annualized Cost ($/yr)	Average Cost Effectiveness ($/ton)	Incremental Cost Effectiveness ($/ton)
Mechanical Draft, 10 MMBtu/hr (SCR not required)						
	CC+SCR	0.0085	0.4	38,701	4,238	32,874
	CC	0.035	1.5	244	31	n/a
	baseline	0.217	9.5	n/a	n/a	n/a
Mechanical Draft, 50 MMBtu/hr (SCR not required)						
	CC+SCR	0.0085	1.9	68,170	1,493	11,477
	CC	0.035	7.7	1,040	26	n/a
	baseline	0.217	47.6	n/a	n/a	n/a
Mechanical Draft, 75 MMBtu/hr (SCR required)						
	CC+SCR	0.0085	2.3	89,226	1,293	9,462
	CC	0.035	11.6	1,408	24	n/a
	baseline	0.217	71.3	n/a	n/a	n/a
Mechanical Draft, 150 MMBtu/hr (SCR required)						
	CC+SCR	0.0085	5.6	138,977	1,015	7,761
	CC	0.035	23.1	2,796	23	n/a
	baseline	0.217	142.6	n/a	n/a	n/a
Mechanical Draft, 350 MMBtu/hr (SCR required)						
	CC+SCR	0.0085	13.0	253,064	792	6,034
	CC	0.035	54.0	5,995	22	n/a
	baseline	0.217	332.6	n/a	n/a	n/a

draft

Model	Control Option	NO_X Level (lb/MMBtu)	Emissions (tons/yr)	Annualized Cost ($/yr)	Average Cost Effectiveness ($/ton)	Incremental Cost Effectiveness ($/ton)
Natural Draft, 10 MMBtu/hr (SCR not required)						
	CC+SCR	0.0085	0.4	40,400	9,270	34,594
	CC	0.035	1.5	244	76	n/a
	baseline	0.108	4.7	n/a	n/a	n/a
Natural Draft, 50 MMBtu/hr (SCR not required)						
	CC+SCR	0.0085	1.9	71,710	3,291	12,176
	CC	0.035	7.7	1,040	65	n/a
	baseline	0.108	23.7	n/a	n/a	n/a
Natural Draft, 75 MMBtu/hr (SCR not required)						
	CC+SCR	0.0085	2.8	93,474	2,818	10,422
	CC	0.035	11.7	1,408	58	n/a
	baseline	0.108	36.0	n/a	n/a	n/a
Natural Draft, 150 MMBtu/hr (SCR required)						
	CC+SCR	0.0085	5.6	143,933	2,202	8,106
	CC	0.035	23.0	2,796	58	n/a
	baseline	0.108	71.0	n/a	n/a	n/a
Natural Draft, 350 MMBtu/hr (SCR required)						
	CC+SCR	0.0085	13.0	258,728	1,696	6,221
	CC	0.035	53.7	5,995	54	n/a
	baseline	0.108	165.5	n/a	n/a	n/a

In closing, the Department notes that its methodology for deciding which control option represents BACT for NO_X emissions from process heaters at the proposed Arizona Clean Fuels refinery is fundamentally similar to the methodology used by U.S. EPA's Office of Air Quality Planning and Standards. The Department disagrees with the comment made by U.S. EPA Region IX to the extent that the comment suggests that the Department should be required to assign greater weight to the beneficial environmental impact and less weight to the adverse environmental, energy, and economic impacts.

d. U.S. EPA's comment: *The NO_X emission limits vary from heater to heater. Why do they differ?*

Department's response: Each of the process heaters at the proposed Arizona Clean Fuels refinery is an integral part of a refining process unit. Each process unit design and function is different from those of all other process units. Similarly, the function and the physical and operational characteristics of each process heater are different from those of all other process heaters. These differences, and in particular the differences in factors such as heat release rate, required turndown ratio, and permissible flame length, affect the degree to which NO_X formation in the heater's firebox can be reduced.

e. U.S. EPA's comment: *The Region has identified more stringent NO_X emission limits for other petroleum refinery process heaters; thus, the proposed NO_X limits are higher than BACT.*

Department's response: It appears that the U.S. EPA Region IX commenter is confusing the applicable definition of "BACT" under Arizona's Prevention of Significant Deterioration rule with the definition of "BACT" applied by some permitting authorities in California.

The BACT requirement that is applicable to the proposed Arizona Clean Fuels refinery is that defined at A.A.C. R18-2-101.19. This BACT requirement, and the underlying statutory BACT requirement at Clean Air Act § 169(3), require that the determination of BACT be based on a case-by-case evaluation of economic, energy, and environmental impacts and other costs. This is drastically different from the definition applied by some permitting authorities in California, where the term "BACT" actually implements the statutory Lowest Achievable Emission Rate ("LAER") provision, which is required in nonattainment areas under Clean Air Act § 171(3).

The distinction between the California BACT requirement and the BACT requirement that is applicable to the proposed Arizona Clean Fuels refinery is, in this instance, an important one. The BACT requirement being implemented by the Department, as described previously, requires a case-by-case determination of BACT considering the economic, energy, and environmental impacts and other costs of the identified control options. Having given due consideration to each of these factors, the Department has made a preliminary determination of BACT for NO_X emissions from each of the eighteen process heaters at the proposed Arizona Clean Fuels refinery, as described in detail in Section V.B.3 herein. For eleven of the process heaters, the Department preliminarily determined that BACT is an emission limit based on the use of combustion controls without SCR, because the addition of SCR would result in adverse energy, environmental, and economic impacts that do not outweigh its beneficial environmental impact. Similarly, for the remaining seven process heaters, the Department preliminarily

determined that BACT is an emission limit based on the use of combustion controls and moderate-efficiency SCR; the Department selected the moderate-efficiency SCR system in order to achieve the optimal balance of beneficial and adverse environmental impacts. The California BACT definition, and the underlying statutory LAER provision, would not allow these considerations to influence the determination. The California BACT requirement provides that the emission limitation can be no less stringent than the most stringent emission limitation which is achieved in practice for "such class or category of source," and also no less stringent than the most stringent emission limitation contained in a State Implementation Plan. Thus, if these more rigid and prescriptive requirements had been applicable to the proposed Arizona Clean Fuels refinery, the Department would have had no choice but to require combustion controls and high-efficiency SCR for each process heater, even though such a requirement would have resulted in adverse energy, economic, and environmental impacts that the Department has determined outweigh its beneficial environmental impacts.

Thus, when implementing the BACT requirement that is applicable to the proposed Arizona Clean Fuels refinery, the Department may review the emission limitations that have been imposed on similar emission units at stationary sources in other States, but for a different purpose than an agency implementing California BACT would perform such a review. A permitting authority in California would be required to identify the most stringent emission limit being achieved by a similar emission unit, and could not establish a less stringent emission limit for the unit under consideration. The Department, however, considers such emission limits only to the extent that they may be informative as to the technical feasibility of certain control options, the degree of emission reduction achievable, and the relative weights that other permitting authorities are assigning to the various factors required to be considered under the statutory BACT provision.

f. U.S. EPA's comment: *The EPA's approach is that the average cost is given more weight than incremental cost when determining economic impacts at a new facility. At an existing source undergoing a modification, the incremental cost may be more relevant since retrofit costs, rather than new construction costs, would be the focus.*

Department's response: The comment is noted. The Department notes that, in this instance, the Department is the permitting authority and has responsibility for determining BACT. Thus, the approach that U.S. EPA or other permitting authorities might employ, if faced with similar circumstances, is not material.

g. U.S. EPA's comment: *In the case of the EPA guidance memo, an incremental cost was given as a guideline in the context of installing new heaters at an existing refinery necessitated by the new Tier 2 standards. (In the report attached to the EPA guidance memo, average costs are also provided.)*

Department's response: The Department notes that the memorandum referenced in this comment is the January 2001 memorandum mentioned in Section V.B.3 herein and discussed in detail in Section X.A.1.c(5) herein. The comment is noted.

h. U.S. EPA's comment: *When determining whether an economic impact is significant, EPA's approach is to look at the cost effectiveness of a control technology for the facility in question and compare it to the cost effectiveness at other facilities where the control technology is already installed and being used. (Refer to section IV.D.2.c. of Chapter B of the Puzzle Book.) If the cost effectiveness of SCR at Arizona Clean Fuels is not significantly higher than the cost effectiveness at recent installations elsewhere, SCR cannot be eliminated as a control technology option based on economic impacts. We did not see an analysis in the TSD making such a comparison.*

Department's response: The comment with regard to U.S. EPA's approach is noted. The Department notes that, in this instance, the Department is the permitting authority and has responsibility for determining BACT. Thus, the approach that U.S. EPA or other permitting authorities might employ, if faced with similar circumstances, is not material.

With regard to the remainder of the comment, and in particular the assertion that SCR "cannot be eliminated" unless its cost effectiveness is "significantly higher than the cost effectiveness at recent installations elsewhere, the Department strenuously disagrees. The Department believes that this assertion reflects a fundamental misunderstanding by the commenter regarding the implementation of the BACT requirement under the Clean Air Act.

The "Puzzle Book" cited within this comment is the October 1990 draft U.S. EPA guidance document entitled "New Source Review Workshop Manual: Prevention of Significant Deterioration and Nonattainment Area Permitting." The Department considers the comment from U.S. EPA Region IX to be an accurate summary of the following passage from the draft 1990 Workshop Manual:

> "[W]here unusual factors exist that result in cost/economic impacts beyond the range normally incurred by other sources

> in that category, the technology can be eliminated provided the applicant has adequately identified the circumstances, including the cost or other analyses, that show what is significantly different about the proposed source...
>
> "To justify elimination of an alternative on these grounds, the applicant should demonstrate to the satisfaction of the permitting agency that costs of pollutant removal (e.g., dollars per total ton removed) for the control alternative are disproportionately high when compared to the cost of control for the pollutant in recent BACT determinations. Specifically, the applicant should document that the cost to the applicant of the control alternative is significantly beyond the range of recent costs normally associated with BACT for the type of facility (or BACT control costs in general) for the pollutant."

Cost effectiveness, which is most commonly expressed in dollars per ton of emission reduction, is the primary consideration both in the comment from U.S. EPA and in the quoted passage from the draft 1990 Workshop Manual. As discussed in Section X.A.1.b herein, cost effectiveness, expressed in dollars per ton of emission reduction, is a unit of measure that provides a comparison of the adverse economic impacts (i.e., capital and operating costs) and the beneficial environmental impact (i.e., air pollutant emission reduction) of a control option being evaluated. Cost effectiveness does not take into account any beneficial or adverse energy impacts or any adverse environmental impacts of a control option so, by itself, cost effectiveness cannot be used to satisfy the statutory requirement for consideration of all economic, energy, and environmental impacts. Notwithstanding these limitations, U.S. EPA's apparent policy would require exclusive reliance on cost effectiveness as the determinant of the control technology representing BACT.

To illustrate the effect of strict adherence to this policy: A permitting authority having jurisdiction over an economically depressed area with no significant air quality concerns (i.e., NAAQS are not threatened and no increment has been consumed) is evaluating BACT for NO_X emissions from a boiler. The permitting authority has made few BACT determinations for any type of source, as its jurisdiction includes only areas that have seen very little economic growth since enactment of the PSD program, and has never made a BACT determination that required any add-on control for NO_X emissions. The permitting authority identifies SCR as the most effective of the technically feasible control options, and determines that the average cost effectiveness of SCR at this particular boiler is $5,000 per ton. Ammonia slip and decreased energy efficiency are identified as adverse environmental and energy impacts associated with SCR. The permitting authority, based on consideration of the air quality and the economic situation in the area where the

proposed boiler will be installed, and after consultation with other government agencies in the same jurisdiction, decides that the single most important criterion affecting its BACT decision is the need for an economically viable employer in the area. The permitting authority determines that the NSPS, all applicable state and local emission standards, and all ambient air quality standards will easily be met without the use of SCR. The permitting authority surveys the relevant industrial category nationwide and determines that only five percent of similar boilers employ SCR, all of them in California and New York. The permitting authority considers the environmental and energy impacts of requiring SCR, and determines that the benefit of reducing NO_X emissions marginally outweighs the adverse environmental and energy impacts. However, the permitting authority, giving relatively greater weight to economic impacts and relatively little weight to the negligible air quality benefit, determines that the cost of SCR would greatly outweigh its benefits, and preliminarily determines that SCR does not represent BACT for the particular facility under consideration. However, during the comment period, U.S. EPA points out that an identical facility in San Francisco has installed SCR to control NO_X emissions. Due to higher insurance costs, the SCR installation in California has an average cost effectiveness of $5,050 per ton. The local commerce department points out that the median household income in San Francisco is eight times that of the county where the proposed boiler would be located, and the unemployment rate in San Francisco is only one-fourth as high. The permitting authority reviews its policy and, after consultation with U.S. EPA, determines that these economic considerations are not unique to the proposed facility. Thus, the permitting authority, realizing that its policy does not allow consideration of adverse economic impacts unless the impacts are more adverse than any other similar facility regardless of location, changes its determination to require SCR as BACT.

As illustrated by the above example, adherence to this policy severely restricts a permitting authority's discretion to assign appropriate weight to the factors that are required to be considered in determining BACT. A permitting authority that adheres to this policy cannot assign less weight to emission reductions or more weight to economic considerations than any other permitting authority has assigned. To the extent that this policy is implemented by U.S. EPA in instances where U.S. EPA is the permitting authority and is responsible for determining BACT, the Department considers this policy to be an admirable goal. However, it appears that the comment from U.S. EPA would suggest that adherence to this policy is a binding requirement on the Department and other permitting authorities. This is wholly untrue. The statutory PSD provisions, the legislative history, and the PSD regulations are unambiguous and are in agreement: The state, as permitting authority,

is responsible for assigning weight to economic impacts and other factors, based on local considerations. Consideration of the cost effectiveness of controls required by other permitting authorities is certainly not discouraged or prohibited, but neither is it required.

Unfortunately, in spite of the clarity of congressional intent on this issue, U.S. EPA has, for nearly twenty years, occasionally had staff who misrepresent this and similar policies as requirements of the PSD program. The draft 1990 Workshop Manual and the latest comment from U.S. EPA Region IX are but two instances. The 1987 Region IX "Best Available Control Technology Guidance Document" includes an even more extreme statement of essentially the same policy:

> "An agency implementing the PSD program and wishing to impose a stringent BACT requirement may place the geographic area over which it has authority at an economic disadvantage with respect to other geographic localities if the air pollution agencies in those other localities are willing to impose BACT requirements less stringent than those imposed elsewhere. In order to avoid this problem, and achieve national consistency, each BACT proposal less stringent than the most effective control for that source category must make two showings in order for the proposal to receive consideration...
>
> "The project proponent must show that there are factors unique to the project that differentiate this project from other projects in the source category permitted with more stringent limits...
>
> "The applicant should also make a showing that granting the request for a less stringent limit will not grant an undue competitive advantage to other industries that are of the same source category, and would be constructing a similar new facility at the same time. The rigor of the analysis may range from certification by the applicant that the project would not cause a competitive advantage if permitted with less stringent controls, to an in-depth analysis comparing similar facilities nationwide. The degree of rigor should be determined on a case-by-case basis by the reviewing agency."

Notwithstanding the occasional misrepresentations by U.S. EPA staff, the U.S. EPA as a whole has long recognized that prescriptive policy statements like those above are not binding requirements on State permitting authorities charged with making BACT determinations. For example, the preface to the draft 1990 Workshop Manual includes the following disclaimer:

draft

> "This document ... is not intended to be an official statement of policy and standards and does not establish binding regulatory requirements; such requirements are contained in the regulations and approved state implementation plans. Rather, the manual is designed to (1) describe in general terms and examples the requirements of the new source regulations and pre-existing policy; and (2) provide suggested methods of meeting these requirements, which are illustrated by examples. Should there be any apparent inconsistency between this manual and the regulations (including any policy decisions made pursuant to those regulations), such regulations and policy shall govern... The focus of this manual is the prevention of significant deterioration (PSD) portion of the NSR program found in the Federal Regulations at 40 CFR 52.21. It does not necessarily describe the specific requirements in those areas where the PSD program is conducted under a state implementation plan (SIP) which has been developed and approved in accordance with 40 CFR 51.166. The reader is cautioned to keep this in mind when using this manual for general program guidance."

Consistent with this disclaimer, U.S. EPA, when it proposed to revise the PSD regulations in 1996, proposed to establish very different BACT provisions for 40 CFR § 51.166 and 40 CFR § 52.21. The proposed regulations would require that a prescriptive top-down procedure, similar to that outlined in the draft 1990 Workshop Manual, be implemented as part of the federal PSD program. For SIP-approved PSD programs, no such prescriptive requirements were proposed; instead, the regulation would require only that each BACT determination meet the two core criteria described in Section V.A.1 herein.

Finally, it should be noted that, in making its BACT determination for NO_X emissions from process heaters at the proposed refinery, the Department did review the cost effectiveness of NO_X controls required by other permitting authorities. As discussed in detail in Section X.A.1.c herein, this review shows that the Department is not assigning greater weight to adverse economic impacts (i.e., is not applying a lower cost-effectiveness threshold) than other permitting authorities making NO_X BACT determinations for petroleum refineries. However, the Department did not give any particular consideration to the results of this review, and the Department continues to emphasize that the PSD program reserves to the permitting authority the responsibility to weigh the factors as it sees fit for a particular site. As stated repeatedly herein, the Department considers other States' BACT determinations only to the extent that they may be informative as to the technical feasibility of certain control options, the degree of emission reduction achievable, and the relative weights that other permitting authorities are assigning to the

various factors required to be considered under the statutory BACT provision.

2. Heaters for which SCR is Required

a. U.S. EPA's comment: *The Region has identified more stringent NO_X emission limits for other petroleum refinery process heaters; thus, the proposed NO_X limits are higher than BACT. [Note: This comment was included only once in the process heater NO_X emission section in EPA's written comments, but it was unclear to the Department whether it was intended to apply to process heaters for which SCR is or is not required. Because it could potentially apply in both situations, the Department has included it in both Sections X.A.1 and X.A.2 of this Technical Support Document.]*

Department's response: See Section X.A.1.e herein.

b. U.S. EPA's comment: *The South Coast Air Quality Management District in California on May 16, 2000 issued a BACT determination for Cenco Refining that required low-NO_X burners with SCR, a NO_X emission limit of 7 ppm, and 5 ppm ammonia slip.*

Department's response: The Department is aware that the "BACT Clearinghouse Database" available on the California Air Resources Board Internet web site (http://www.arb.ca.gov/bact/bactsearch.htm) includes a listing for a process heater at the Cenco Refining Company. The web site listing is dated May 22, 2000, but it includes information that is otherwise similar to that cited by U.S. EPA Region IX, so the Department presumes that they refer to the same BACT determination. U.S. EPA's comment does not appear to reflect the final BACT determination for the Cenco Refining process heater: the cited "BACT Clearinghouse Database" indicates that it was last updated on July 25, 2000; the South Coast Air Quality Management District's Internet web site (http://www.aqmd.gov/bact/AQMDBactDeterminations.htm) includes an updated BACT determination dated January 3, 2001. The updated BACT determination indicates a NO_X emission limit of 5 ppmvd, corrected to three percent oxygen concentration, and an ammonia slip limit of 9 ppmvd, corrected to three percent oxygen concentration.

As discussed in detail in Section X.A.1.e herein, when evaluating BACT for a particular emission unit, the Department considers emission limits that have been imposed on similar emission units at stationary sources in other States only to the extent that they may be informative as to (1) the technical feasibility of certain control options, (2) the degree of emission reduction achievable, and (3) the relative weights that other

permitting authorities are assigning to the various factors required to be considered under the statutory BACT provision. The cited BACT determination is not at all informative as to items (1) or (2) because the permit was invalidated and the facility was never constructed; in addition, even if the facility had been constructed, it was permitted to fire only natural gas, not refinery fuel gas, and thus is not comparable to the process heaters at the proposed Arizona Clean Fuels refinery. The cited BACT determination made in California also is not informative as to item (3) because it was made under the California BACT provision, which does not provide for consideration of these factors.

c. U.S. EPA's comment: *We do not agree that the NOx emission limit of 0.0125 lb/MMBtu (=10 ppm) is BACT. For heaters with SCR and low-NOx burners, we have seen NOx emission limits lower than 10 ppm. In both the RACT/BACT/LAER Clearinghouse as well as CARB's database, NOx emission limits of 7 ppm are listed for heaters at refineries. Furthermore, the EPA guidance memo gives a NOx emission limit of 7 ppm as BACT for heaters rated 75 MMBtu/hr or greater. South Coast has listed NOx limits at 5 ppm. In fact, in discussing BACT for heaters with South Coast, they stated that they now normally require 5 ppm NOx for heaters rated at or above 20 MMBtu/hr, regardless of the type of fuel used. They currently have a reformer furnace at Chevron-El Segundo permitted at 5 ppm NOx. This unit is fueled with refinery fuel gas (RFG). The unit has been source tested, and the NOx emission limit has been met. The approval step by South Coast's Source Test group has not yet been completed but is expected to occur soon. At that point, the BACT determination will be listed on South Coast's web page. A BACT determination is not final until the final permit has been issued. We would like to emphasize that, if the decision currently is to include a NOx limit higher than 5 ppm in the permit, it may need to be reconsidered at a later time since new BACT determinations at other facilities may be listed before the final permit for Arizona Clean Fuels is issued.*

Department's response: See Section X.A.1.e herein.

B. Process Heater CO Emissions

1. U.S. EPA's comment: *The proposed CO limits are higher than BACT.*

Department's response: See Section X.A.1.e herein.

2. U.S. EPA's comment: *The South Coast Air Quality Management District in California on May 16, 2000 issued a BACT determination for Cenco Refining that required a CO emission limit of 10 ppm.*

Department's response: The Department is aware that the "BACT Clearinghouse

Database" available on the California Air Resources Board Internet web site (http://www.arb.ca.gov/bact/bactsearch.htm) includes a listing for a process heater at the Cenco Refining Company. The web site listing is dated May 22, 2000, but it includes information that is otherwise similar to that cited by U.S. EPA Region IX, so the Department presumes that they refer to the same BACT determination.

As discussed in detail in Section X.A.1.e herein, when evaluating BACT for a particular emission unit, the Department considers emission limits that have been imposed on similar emission units at stationary sources in other States only to the extent that they may be informative as to (1) the technical feasibility of certain control options, (2) the degree of emission reduction achievable, and (3) the relative weights that other permitting authorities are assigning to the various factors required to be considered under the statutory BACT provision. The cited BACT determination is not at all informative as to items (1) or (2) because the permit was invalidated and the facility was never constructed; in addition, even if the facility had been constructed, it was permitted to fire only natural gas, not refinery fuel gas, and thus is not comparable to the process heaters at the proposed Arizona Clean Fuels refinery. The cited BACT determination made in California also is not informative as to item (3) because it was made under the California BACT provision, which does not provide for consideration of these factors.

3. U.S. EPA's comment: *Emission limits proposed for coker heaters are double the limits found in RBLC for similar heaters.*

Department's response: The Department is aware of RBLC database entry number TX-0322, which indicates that the Texas Commission on Environmental Quality (TCEQ) (formerly the Texas Natural Resource Conservation Commission) in October 1999 made a draft BACT determination for a coker heater at the Citgo Refining and Chemicals petroleum refinery in Corpus Christi, Texas. The cited RBLC database entry, which pertains to draft PSD Permit No. PSD-TX-408M2, includes information that appears to correspond with the comment from U.S. EPA Region IX, so the Department presumes that they refer to the same facility.

The cited RBLC database entry indicates that the draft BACT determinations made by TCEQ for the 291 MMBtu/hr coker heater at the Citgo refinery include a CO emission limit of 5.81 lb/hr, which is equivalent to approximately 0.02 lb/MMBtu, and a NO_X emission limit of 52.31 lb/hr, which is equivalent to approximately 0.18 lb/MMBtu. This NO_X emission limit is six times as high as the proposed NO_X BACT emission limit for the Delayed Coking Unit Charge Heaters at the proposed Arizona Clean Fuels refinery. The NO_X and CO emission limits in the cited RBLC entry would appear to reflect the fact that rates of formation of CO and NO_X in heaters, boilers, and furnaces are inversely related.

As discussed in detail in Section X.A.1.e herein, when evaluating BACT for a particular emission unit, the Department considers emission limits that have been imposed on similar emission units at stationary sources in other States only to the extent that they may be informative as to (1) the technical feasibility of certain control options, (2) the degree of emission reduction achievable, and (3) the relative weights that other permitting authorities are assigning to the various factors required to be considered under the statutory BACT provision. The cited draft BACT determination made by TCEQ is somewhat informative as to items (1) and (2), in that it supports the Department's conclusions regarding the inverse relationship of CO and NO_X formation in RFG-fired process heaters. The cited BACT determination made by TCEQ is somewhat informative as to item (3) because it provides an indication of the relative importance that TCEQ assigns to CO and NO_X emissions, but this is a function of local air quality considerations and is not material to the Department's BACT analysis in this case.

Permit No. PSD-TX-408M2 was issued by TCEQ as a final permit in October 2003 with less stringent CO emission limits. The revised CO emission limit is 23.90 lb/hr, which is equivalent to approximately 0.082 lb/MMBtu, and more than twice as high as the proposed CO BACT limit for the Delayed Coking Unit Charge Heaters at the proposed Arizona Clean Fuels refinery. The NO_X emission limit is unchanged at 52.31 lb/hr, which is equivalent to approximately 0.18 lb/MMBtu, and six times as high as the proposed NO_X BACT limit for the Delayed Coking Unit Charge Heaters at the proposed Arizona Clean Fuels refinery.

As a result of this comment from U.S. EPA, the Department revised Section V.B.4 of the Technical Support Document to include a more meaningful discussion of the inverse relationship of CO and NO_X formation in RFG-fired process heaters.

C. Process Heater PM Emissions

1. U.S. EPA's comment: *The proposed limit is 0.0075 lb/MMBtu heat input; numerically lower limits were found in the RBLC (0.0065 and 0.006 lb/MMBtu).*

Department's response: The Department is aware of RBLC database entry number PA-0231, which indicates that the Pennsylvania Department of Environmental Resources (PaDER) in October 2003 issued PSD Plan Approval No. 62-017G for the United Refining petroleum refinery in Warren, Pennsylvania. The Department also is aware of RBLC database entry number TX-0322, which indicates that TCEQ in October 1999 issued draft PSD Permit No. PSD-TX-408M2 for the Citgo Refining and Chemicals petroleum refinery in Corpus Christi, Texas. Each of these RBLC database entries includes information that appears to correspond with the comment from U.S. EPA Region

IX, so the Department presumes that they represent the entries to which U.S. EPA refers.

The cited RBLC database entry number PA-0231 indicates that PaDER's BACT determination included a PM emission limit of 0.75 lb/hr for a 116 MMBtu/hr coker heater. This limit is equivalent to approximately 0.0065 lb/MMBtu. Based on the Department's review of the PSD Plan Approval No. 62-017G and on discussions with the PaDER permit writer and stack test coordinator, this emission limit represents only filterable particulate matter, with compliance to be demonstrated using U.S. EPA Reference Method 5, and the initial compliance demonstration has not yet been performed.

The cited RBLC database entry number TX-0322 indicates that the draft BACT determinations made by TCEQ include the following PM emission limits, each of which is equivalent to approximately 0.006 lb/MMBtu:

0.36 lb/hr at a 62 MMBtu/hr distillate hydrotreater charge heater;
0.48 lb/hr at an 82 MMBtu/hr distillate hydrotreater reboiler;
0.58 lb/hr at a 99 MMBtu/hr steam boiler; and
1.71 lb/hr at a 291 MMBtu/hr coker heater.

However, Permit No. PSD-TX-408M2 was issued by TCEQ as a final permit in October 2003 with less stringent PM emission limits. The revised PM emission limits, each of which is equivalent to approximately 0.0075 lb/MMBtu, are as follows:

0.46 lb/hr at the 62 MMBtu/hr distillate hydrotreater charge heater;
0.61 lb/hr at the 82 MMBtu/hr distillate hydrotreater reboiler;
0.74 lb/hr at the 99 MMBtu/hr steam boiler; and
2.20 lb/hr at the 291 MMBtu/hr coker heater.

As discussed in detail in Section X.A.1.e herein, when evaluating BACT for a particular emission unit, the Department considers emission limits that have been imposed on similar emission units at stationary sources in other States only to the extent that they may be informative as to (1) the technical feasibility of certain control options, (2) the degree of emission reduction achievable, and (3) the relative weights that other permitting authorities are assigning to the various factors required to be considered under the statutory BACT provision. The cited BACT determination made by PaDER is not informative as to items (1) and (2) because the subject emission unit has not demonstrated compliance with its emission limit. Also, this emission limit is less stringent than that proposed by the Department, so, if compliance with this emission limit had been demonstrated, this information would generally support the Department's conclusions. The cited BACT determination made by PaDER is not informative as to item (3) because, since only one control option was identified, the determination provides no indication as to the agency's consideration of the

various factors.

The cited BACT determinations made by TCEQ are somewhat informative as to items (1) and (2), in that they support the Department's conclusions regarding the achievable PM emission levels at RFG-fired process heaters. The cited BACT determination made by TCEQ is not informative as to item (3) because, since only one control option was identified, the determination provides no indication as to the agency's consideration of the various factors.

D. Steam Boilers

1. U.S. EPA's comment: *The South Coast Air Quality Management District in California on December 16, 1999 issued a BACT determination for Coca Cola that required a NO_X emission limit of 7 ppm and an ammonia slip limit of 5 ppm.*

Department's response: The Department is aware that South Coast Air Quality Management District's Internet web site (http://www.aqmd.gov/bact/AQMDBactDeterminations.htm) includes a BACT determination for a boiler at a Coca Cola facility. The cited BACT determination indicates a NO_X emission limit of 5 ppmv, corrected to three percent oxygen concentration, and an ammonia slip limit of 7 ppmv, also corrected to three percent oxygen concentration. The web site listing is dated December 6, 1999, but it includes information that is otherwise similar to that cited by U.S. EPA Region IX, so the Department presumes that they refer to the same BACT determination.

As discussed in detail in Section X.A.1.e herein, when evaluating BACT for a particular emission unit, the Department considers emission limits that have been imposed on similar emission units at stationary sources in other States only to the extent that they may be informative as to (1) the technical feasibility of certain control options, (2) the degree of emission reduction achievable, and (3) the relative weights that other permitting authorities are assigning to the various factors required to be considered under the statutory BACT provision. The cited BACT determination is not at all informative as to items (1) or (2) because the web site listing indicates that the facility has not yet demonstrated compliance with its emission limit. The cited BACT determination made in California also is not informative as to item (3) because it was made under the California BACT provision, which does not provide for consideration of these factors.

2. U.S. EPA's comment: *The draft Technical Support Document states that the highest-ranked NO_X control strategy involves SCR in addition to combustion modifications (i.e., low-NO_X burners with flue gas recirculation) and that SCR was ruled out based on adverse economic impacts.*

Department's response: The comment with regard to the identification of the highest-ranked NO_X control strategy is noted and is correct. The comment with regard to the Department's rationale for not selecting the highest-ranked control

option as BACT is incorrect; the Department's preliminary BACT determination for NO_X emissions from the Steam Boilers was not based primarily or predominantly on the incremental cost effectiveness, or on any other single factor, for any particular control option. Instead, as described in detail in Section V.B.3 herein, the Department's preliminary BACT determinations are based on consideration of all beneficial and adverse economic, energy, and environmental impacts of both control options under consideration. For the Steam Boilers, the Department determined that the adverse impacts (including, but not limited to, ammonia emissions and capital and operating costs) outweigh the beneficial impact (reduced NO_X emissions).

3. U.S. EPA's comment: *Economic impact is described in terms of incremental cost only, including the following statement: "The cost effectiveness of adding SCR systems to those combustion sources where the Permittee has proposed the use of combustion controls as BACT" is $38,000 per ton.*

Department's response: The comment from U.S. EPA Region IX is noted and, with respect to the preliminary draft copy of the Technical Support Document provided by the Department in October 2003, is correct.

While this comment from U.S. EPA Region IX does not include any explicit mention of a preference for average cost effectiveness or any particular threshold for average cost effectiveness of NO_X controls, the Department infers that the intent of the comment may have been similar to that of the comments addressed in Sections X.A.1.b and X.A.1.c herein. Allowing for that possibility, the Department has proactively addressed those comments as they would apply to the Steam Boilers at the proposed Arizona Clean Fuels refinery.

As a result of the comment from U.S. EPA that was addressed in Section X.A.1.b herein, and recognizing that this information may be useful and informative to other agencies conducting NO_X BACT analyses in the future, the Department revised Section V.B.3 of the Technical Support Document to include additional data characterizing the economic impacts portion of the BACT analysis for NO_X emissions from the Steam Boilers. As discussed in the revised Section V.B.3, the Department's calculations show that the highest-ranked NO_X control strategy for the Steam Boilers has an average cost effectiveness of approximately $800 per ton and an incremental cost effectiveness (when compared to the control option proposed as BACT) of $34,000 per ton.

For the reasons described in detail in Section X.A.1.c herein, when making its preliminary BACT determination for NO_X emissions from the Steam Boilers, the Department gave greater weight to the incremental cost effectiveness than to the average cost effectiveness. The selection of a baseline NO_X emission rate for the Steam Boilers, and thus the determination of average cost effectiveness for any NO_X control option for these emission units, is inherently arbitrary. As noted in Section V.B.3 herein, the Department based its estimate of each boiler's baseline

draft

emission rate (0.274 lb/MMBtu) on the estimated uncontrolled emissions for a large natural gas-fired boiler as documented in Section 1.4 of U.S. EPA's AP-42 emission factor compilation. Because the applicant has proposed to equip each of its process heaters with combustion controls capable of achieving NO_X emissions of approximately 0.0125 lb/MMBtu, the Department is does not consider its estimate of baseline emission rate to be realistically representative of the emissions from these boilers. However, the Department also does not consider any other specific baseline emission rate to be any more representative.

4. U.S. EPA's comment: *The NO_X emission limit in the draft permit (10 ppm) is higher than BACT.*

Department's response: See Section X.A.1.e herein.

E. Gas Concentration Plant

1. U.S. EPA's comment: *Why doesn't the de-ethanizer column have a condenser?*

Department's response: The Department cannot provide a definitive answer to this question, as it is beyond the purview of the Department's review of the PSD permit application. (There are no emissions from the De-Ethanizer Column, other than possible fugitive emissions due to leaking components, so the Department's review was limited to the minimization of these fugitive emissions.) The Department can, however, provide the following speculative answer based on general knowledge of the petroleum refining industry: an ethane condenser would serve no useful purpose, as ethane burns effectively as a fuel when delivered into the combustion device in its gaseous state.

As this comment was made in the context of U.S. EPA's review of the Department's preliminary BACT determinations for the proposed Arizona Clean Fuels refinery, it appears that the U.S. EPA Region IX commenter likely is mistakenly considering the Depropanizer Condenser and the Debutanizer Condenser as air pollution control devices. The Depropanizer Column and the Debutanizer Column are equipped with condensers to recover mixed C3 and mixed C4 hydrocarbon materials as products.

2. U.S. EPA's comment: *Will RFG be routed to treatment unit before combustion?*

Department's response: It is unclear to the Department what is meant by the term "treatment unit" in this comment. For the purposes of this response, the Department is presuming that the comment refers generally to equipment used for removal of sulfur compounds from RFG in order to minimize SO_2 emissions from RFG-fired combustion sources.

As described in detail in Sections II.B and V.B.2 herein, the Gas Concentration Plant will include process vessels in which hydrogen sulfide-containing gas

streams are contacted with an aqueous amine solution for sulfur removal. The Department's preliminary BACT determination for SO_2 emissions would require that the RFG be treated in this manner to an extent sufficient to ensure that the sulfur content of RFG burned in each RFG-fired combustion sources is equal to or less than 35 ppmv, based on a daily average.

F. Group "C" Storage Tanks

1. U.S. EPA's comment: *According to the TSD, control with thermal oxidizer is technically feasible but prohibitive from environmental and economic standpoints.*

Department's response: The Department is in general agreement with this observation by U.S. EPA Region IX, but two clarifications are in order. First, the alternative control option to which U.S. EPA is apparently referring would involve replacement of the external floating-roof storage tanks with internal floating-roof storage tanks, and with the headspace routed to a thermal oxidizer. Second, the Department did not determine that the adverse impacts of the more effective control option are "prohibitive" in the sense that the Department would disallow the use of that control option; rather, the Department determined that the adverse impacts of requiring such use would outweigh the beneficial impacts.

2. U.S. EPA's comment: *With regard to the environmental impacts of using a thermal oxidizer [as referenced in Section X.E.a above]: The potential 80 tons per year reduction of VOCs would be accompanied by 10 tons per year increase of NO_X and CO. The ozone non-attainment designation is due in larger part to VOCs than NO_X; therefore, while not desirable, the slight to moderate increase in NO_X and CO does not necessarily outweigh the benefits derived from 80 tons per year VOC emission reduction.*

Department's response: The Department presumes that the ozone nonattainment designation to which U.S. EPA Region IX refers in this comment is that for the Phoenix metropolitan area. (At the time this comment was made, the proposed Arizona Clean Fuels refinery was to be located in Maricopa County, much nearer Phoenix than the current proposed location in Yuma County.) The Department notes that the ambient air quality impact analyses performed for both locations demonstrated that the proposed refinery would not cause or contribute to exceedance of any NAAQS or PSD increment, and the atmospheric chemistry of tropospheric ozone formation in the Phoenix area was not a consideration in the Department's VOC BACT analysis for the Group "C" Storage Tanks.

The Department agrees with the observation by U.S. EPA Region IX that, by themselves, a 10 ton per year increase in NO_X emissions and a 10 ton per year increase in CO emissions do not necessarily outweigh the VOC emission decrease of 80 tons per year that would be projected to occur as a result of requiring the use of the top control option (i.e., internal floating-roof storage

tanks with the headspace routed to a thermal oxidizer) for the Group "C" storage tanks. The Department's decision not to require the use of the top control option in this case was based on a determination that its adverse impacts, considered as a whole, would outweigh its beneficial impacts. Any implication in this comment from U.S. EPA Region IX that the Department's decision was based solely on a comparison of the beneficial and adverse environmental impacts, without consideration of the adverse energy and environmental impacts, is misplaced.

3. U.S. EPA's comment: *With regard to the economic impacts of using a thermal oxidizer [as referenced in Section X.E.a above]: The Department's analysis yielded an incremental cost effectiveness of $17,000/ton VOC emissions reduced. A single cost calculation is not sufficient. The Department should examine average cost effectiveness to justify elimination of control option. Undue focus on incremental cost can give impression cost is unreasonably high.*

Department's response: As discussed in Sections V.F.1 and Section X.E.2 herein, the Department's decision not to require the use of the top control option in this case was based on a determination that its adverse impacts, considered as a whole, would outweigh its beneficial impacts. The Department has described in Section V.F.1 herein, qualitatively and in some cases quantitatively, the beneficial and adverse energy, economic, and environmental impacts that it considered in reaching its decision. The cited cost effectiveness value is simply a quantitative representation of two discrete impacts. Any reviewer of the complete file for this proposed permitting action could calculate innumerable other ratios that would serve the same purpose, such as tons of VOC emission reduction per barrel of storage tank throughput, or tons of VOC emission reduction per Btu of energy usage. The Department strongly disagrees with any suggestion that its BACT analysis is deficient because a single, calculated cost effectiveness value is used to portray a comparison of the adverse economic impacts (i.e., capital and operating costs) and the beneficial environmental impact (i.e., air pollutant emission reduction) of a control option being evaluated.

Notwithstanding the above, as a result of this comment from U.S. EPA, the Department recognizes that describing the calculated cost effectiveness value as an "incremental cost effectiveness" in the draft Technical Support Document provided to U.S. EPA was potentially inappropriate and misleading, given the meaning that is generally assigned to this term in U.S. EPA policy guidance documents. The calculated cost effectiveness of $17,000/ton VOC emissions reduced actually represents the average cost effectiveness, using the equipment configuration proposed by the applicant to represent the "baseline" configuration. Therefore, in response to this comment from U.S. EPA, the Department's has removed the word "incremental" from the discussion of cost effectiveness for the top control option in this case.

As discussed in detail in Sections X.A.1.b and X.A.1.c herein, the calculation of average cost effectiveness as suggested by U.S. EPA guidance is inextricably linked to the selection of a baseline emission rate, and the term "baseline emission rate" is vague, ambiguous, and conducive to arbitrariness. Nonetheless, the Department understands that other agencies conducting VOC BACT analyses in the future may find it useful to know the average cost effectiveness value calculated by the Department in this case. For this reason, the Department has made the aforementioned revision to Section V.F.1 of this Technical Support Document.

The Department's conclusion regarding the proper characterization of the calculated cost effectiveness value of $17,000/ton VOC emissions can be explained as follows. Predominant U.S. EPA guidance defines the term "baseline emission rate" as "a realistic scenario of upper bound uncontrolled emissions for the source." Although the external floating roofs proposed by the applicant could be considered air pollution control equipment, the Department was unable to identify any alternative equipment configuration that it considers to provide a more realistic representation of the equipment that would be installed in the absence of any regulatory requirement for air pollution control equipment. An 'uncontrolled" external floating-roof storage tank would be simply a cylindrical shell with no roof, which is not a realistic equipment configuration. Similarly, a fixed-roof storage tank would not constitute a realistic configuration or a reasonable baseline, because economics would dictate the use of a floating-roof tank instead. Using Tank 42101 as an example, the Department considers $100,000 to be a reasonable estimate of the excess cost of an external floating-roof tank as compared to a comparably sized fixed-roof tank. The total losses from the fixed-roof tank would be approximately 1.4 million pounds per year. This represents approximately 4,600 barrels of crude oil lost to the atmosphere each year. Assuming a crude oil cost of $25 per barrel and a control efficiency of 95 percent, the use of an external floating roof would save $110,000 per year in crude oil costs. Thus, while uncontrolled, fixed-roof storage tanks might arguably be more representative of uncontrolled emissions, the Department considers this to be an unrealistic representation of the equipment that might actually be installed by the applicant. Any cost effectiveness value that might be calculated by comparison with such an arbitrarily selected "baseline" would be given very little weight by the Department in making its decision regarding BACT for VOC emissions from the Group "C" Storage Tanks.

4. U.S. EPA's comment: *The cost analysis must demonstrate that the cost of thermal oxidizer is disproportionately higher than cost previously borne by other sources. The Department should document that significant differences between the proposed Arizona Clean Fuels refinery and other facilities that create disproportionality.*

Department's response: The Department is not aware of any provision in the

PSD program that would support the opinion set forth in this comment. The Department again notes, as discussed in detail in Sections X.A.1.b and X.A.1.h herein, that the Clean Air Act expressly leaves to the State, acting as the permitting authority, the responsibility to consider the economic, energy, and environmental impacts and other costs of each control option being considered. The Department has not established any policy that would restrict the rejection of a control option as BACT to those instances where the control option is disproportionately more costly than other installations of that same control technology. Such a policy would unnecessarily limit the Department's discretion to consider the full range of beneficial and adverse impacts of alternative control options under consideration. While U.S. EPA Region IX may implement such a policy in those permitting actions where it acts as the permitting authority, that policy is in no way binding on the Department. U.S. EPA's oversight authority is limited to ensuring that the Department's BACT determinations conform to the two core criteria identified by U.S. EPA for making BACT determinations consistent with the statutory requirements. These core criteria are (1) consideration of the most stringent control technologies available, and (2) a reasoned justification, considering "energy, environmental and economic impacts and other costs," of any decision to require less than the "maximum degree of reduction" in emissions. The Department's proposed BACT determinations, including its proposed BACT determination for VOC emissions from the Group "C" Storage Tanks, conform to these core criteria.

5. U.S. EPA's comment: *The following tables provide a summary of the search results from four BACT clearinghouses. The results presented are restricted to entries whose tanks have sizes and contents comparable to those of the Group C tanks at the proposed refinery.*

Department's response: The Department notes that this comment and the accompanying information originated as the result of a conference involving U.S. EPA Region IX staff and Department staff. U.S. EPA staff inquired as to why the top control option had been rejected for the Group "C" Storage Tanks when it had been accepted at other petroleum refineries. The Department indicated that it had no information indicating that any petroleum refineries were similarly equipped. At the Department's request, U.S. EPA provided the information that is presented in the following subsections. No response to U.S. EPA's introductory comment is warranted.

a. U.S. EPA's comment: *CARB BACT Clearinghouse*

Company	*Tank Capacity*	*Tank Contents*	*Control Measures*

Gaviota Terminal Company	*2 @ 9,870,000 gallons* *3 @ 3,360,000 gallons* *1 @ 1,470,000 gallons*	*Crude oil* *Crude oil* *Crude oil*	*Tanks equipped with double-seal internal floating roofs. Vapors are vented to a hard-piped, closed facility vapor collection system and incinerator.*
TOSCO Refining Co.	*4 @ 2,814,000 gallons*	*Crude oil*	*Tanks equipped with internal floating roofs. Vapors collected by enclosed vapor control system and sent to a thermal oxidizer.*
HOPCO	*Unknown*	*Crude oil*	*Collection and incineration of uncontrolled emissions of approximately 12 tpy.*

Department's response: As discussed in detail in Section X.A.1.e herein, when evaluating BACT for a particular emission unit, the Department considers emission limits that have been imposed on similar emission units at stationary sources in other States only to the extent that they may be informative as to (1) the technical feasibility of certain control options, (2) the degree of emission reduction achievable, and (3) the relative weights that other permitting authorities are assigning to the various factors required to be considered under the statutory BACT provision. Each of these three clearinghouse database entries is addressed by the Department in this context.

The cited clearinghouse entry for Gaviota Terminal Company pertains to a BACT determination made by the Santa Barbara County Air Pollution Control District in California in 1987. The BACT determination does not pertain to a petroleum refinery; the subject facility was originally permitted as a marine terminal, and now operates as a pipeline breakout station. The BACT determination is somewhat informative as to item (1) above, to the extent that it supports the Department's determination that this equipment configuration (which was proposed by the applicant for the Group "B" Storage Tanks at the proposed Arizona Clean Fuels refinery) is a technically feasible control option for storage tanks such as the Group "C" Storage Tanks. The BACT determination is somewhat informative as to item (2) above, to the extent that it qualitatively supports the Department's determination that this equipment configuration should be identified as the top control

option for the Group "C" Storage Tanks. The BACT determination made by the Santa Barbara County Air Pollution Control District is not informative as to item (3) because it was not made under a control technology review requirement that implements the statutory BACT requirement at Clean Air Act § 169(3). Instead, because the Gaviota Terminal Company facility is located in an area that is designated nonattainment for ozone, the applicable regulatory provision requiring a control technology review implements the statutory"LAER" provision under Clean Air Act § 171(3).

The cited clearinghouse entry for Tosco Refining Company pertains to a BACT determination made by the Kern County Air Pollution Control District in California in 1997. The BACT determination does not pertain to a petroleum refinery; the subject facility is a petroleum storage and railcar loading station. The BACT determination is somewhat informative as to item (1) above, to the extent that it supports the Department's determination that this equipment configuration (which was proposed by the applicant for the Group "B" Storage Tanks at the proposed Arizona Clean Fuels refinery) is a technically feasible control option for storage tanks such as the Group "C" Storage Tanks. The BACT determination is somewhat informative as to item (2) above, to the extent that it qualitatively supports the Department's determination that this equipment configuration should be identified as the top control option for the Group "C" Storage Tanks. The BACT determination is not at all informative as to item (3) because it does not reflect any consideration by the Kern County Air Pollution Control District of the various factors that are required to be considered in making a BACT determination under the PSD regulation that is applicable to the proposed Arizona Clean Fuels refinery. This is true for two separate reasons. First, the actual BACT "determination" made by the Kern County agency allowed the installation of fixed-roof storage tanks and required only that the tanks be vented to an emission control system that is at least 95 percent efficient in controlling hydrocarbon emissions. The permittee voluntarily installed internal floating-roof storage tanks and, after construction was completed, submitted a permit application reflecting this voluntary installation. (This information supports the Department's selection of the "baseline" configuration for the Group "C" Storage Tanks, discussed in Section X.E.3 herein.) Second, the determination was not made under a control technology review requirement that implements the statutory BACT requirement at Clean Air Act § 169(3). Instead, because the Tosco Refining Company facility is located in an area that is designated nonattainment for ozone, the applicable regulatory provision requiring a control technology review implements the statutory"LAER" provision under Clean Air Act § 171(3).

The cited clearinghouse entry for Hopco pertains to a LAER

determination made by the Kern County Air Pollution Control District in California in 1984. There is no indication that this LAER determination requires an equipment configuration that is similar to what is being evaluated here, or that it imposes an emission limitation that is more stringent than the Department's proposed BACT determination for the Group "C" Storage Tanks. Therefore, this information is not at all informative for the Department's BACT determinations.

b. U.S. EPA's comment: *BAAQMD BACT Guidelines*

Source	*Class*	*Control Measures*	
		Technically Feasible/ Cost Effective	*Achieved in Practice*
*Fixed roof organic liquids storage tanks**	*Tanks with capacity greater than 20,000 gallons*	*None more stringent that those achieved in practice*	*Vapor recovery system with an overall system efficiency $ 98%*
*External floating roof organic liquids storage tanks**	*All tanks*	*Vapor recovery system w/ an overall system efficiency $ 98%*	*BAAQMD Approved roof w/ liquid mounted primary seal and zero gap secondary seal, all meeting design criteria of Reg. 8, Rule 5. Also, no un- gasketed roof penetrations, no slotted pipe guide pole unless equipped with float and wiper seals, and no adjustable roof legs unless fitted w/ vapor seal boots or equivalent.*

draft

*Internal floating roof organic liquids storage tanks**	*All tanks*	*Vapor recovery system w/ an overall system efficiency $ 98%*	*BAAQMD Approved roof w/ liquid mounted primary seal and zero gap secondary seal, all meeting design criteria of Reg. 8, Rule 5. Also, no un gasketed roof penetrations, no slotted pipe guide pole unless equipped with float and wiper seals, and no adjustable roof legs unless fitted w/ vapor seal boots or equivalent*

Department's response: The information is noted. As these "guidelines" reflect a general policy of another permitting agency, rather than specific information for a similar facility, it is not informative for the purposes of the Department's BACT determinations.

c. U.S. EPA's comment: *EPA RBL Clearinghouse - A review of the entries in the EPA RBL Clearinghouse yielded inconclusive results with regard to this particular issue. For most entries, the database did not indicate the tank sizes and/or contents. In such cases, no comparison could be made between the tanks in question and previous BACT determinations. Note, however, that an entry was found for TOSCO Refining Company's crude oil tanks (see summary table for CARB BACT Clearinghouse above).*

Department's response: The observation is noted.

d. U.S. EPA's comment: *South Coast AQMD LAER/BACT Determinations - No LAER/BACT determinations were identified for tanks with capacities and contents comparable to those of the tanks in question.*

Department's response: The observation is noted.

G. Emergency Flares

1. U.S. EPA's comment: *According to the draft Technical Support Document, the flares are designed to combust gases at 276 ºF. Is this the temperature in the flare stack?*

Department's response: The reference to 236 °F in Section II.Y of this Technical

Support Document describes the gas conditions that were used by the applicant in designing the capacities of the emergency flares. In order to improve clarity, the descriptive language in Section II.Y herein has been revised to read as follows. "Each of the two elevated flares is nominally designed to combust 2.0 million pounds per hour of gases (based on gases having a design average molecular weight of 28 pounds per pound-mole and released at a design temperature of 236 degrees Fahrenheit (°F)). This reflects the estimated maximum process vessel venting case and corresponds to the emergency scenario of a total refinery power failure."

2. U.S. EPA's comment: *The flare temperature should be specified in the permit conditions. Flare temperatures are usually specified at 1000-2000 ºF.*

Department's response: In elevated flares such as those at the proposed Arizona Clean Fuels refinery, combustion of waste gases occurs primarily in the open atmosphere, after the gases have exited the flare tip. The Department is not aware of any technology that would allow measurement of the temperature at any location in or near an elevated flare such that the measured temperature would provide a meaningful representation of the flare's performance in reducing VOC emissions. This is supported by the fact that U.S. EPA has promulgated air quality rules regulating the use of flares to control VOC emissions from dozens of different types of emission sources, including several types of emission units that occur frequently in petroleum refineries, and has consistently and exclusively specified the use of opacity, waste gas net heating value, flare exit velocity, and flame presence as surrogate parameters indicative of effective control device operation. Accordingly, the Department considers the statement "flare temperatures are usually specified" in U.S. EPA's comment to be inaccurate, at least with regard to elevated emergency flares, and the Department disagrees with any suggestion that the proposed permit terms for the emergency flares are deficient.

3. U.S. EPA's comment: *A flare gas recovery system would be a useful tool in minimizing emissions from small volume emergency releases and should be considered in a BACT analysis. The addition of a recovery system should not compromise the safety of the plant in the event of large releases, since these systems are designed to open as the pressure rises, and would save Arizona Clean Fuels money in recovered product. While we recognize that the addition of a recovery system may not be cost effective, we would like to see the analysis done. We are open to addition al thoughts and dialogue o n the appropriateness of this control.*

Department's response: The system described in this comment from U.S. EPA Region IX is already required to be included in the design of the proposed refinery.

The term "flare gas recovery system" is not defined in any air pollution control

statute or regulation of which the Department is aware. The description offered by U.S. EPA includes two defining characteristics: "a useful tool in minimizing emissions from small emergency releases" and "designed to open as the pressure rises." This is generally consistent with the description offered on the web site of John Zink Company LLC, a manufacturer of flare systems and other equipment:

> "A flare system consists of a vapor header that collects the flare gases from various sources, a knockout vessel, a liquid seal vessel, and the flare itself. The flare gas recovery unit connection is typically located between the knockout vessel and the liquid seal. Any liquids in the flare gas should be removed before introduction into the flare gas recovery unit. The primary control variable of the John Zink flare gas recovery unit is flare system pressure.
>
> "As the flare header pressure reaches the predetermined pressure control set point, a liquid ring compressor starts up and begins to compress the flare gas. The compressor uses an operating liquid, usually water, to perform the work of compression on the recovered gas. The operating liquid is cooled in a shell-and-tube heat exchanger, evaporative cooler or air-cooled heat exchanger to control compressor discharge temperature.
>
> "The compressor discharges the gas into a three-phase separator that separates the operating liquid from the flare gas and then the condensed hydrocarbons from the operating liquid. Instead of venting process vent streams into the flare system, the compressed gases are made available to the operating plant's fuel gas supply or possibly as a process feedstock.
>
> "Integration and control of a flare gas recovery unit is of critical importance. For example, care must be exercised in the design of the recovery system to prevent application of a vacuum to the vapor header that might draw in air and create a flammable mixture in either the flare header or the fuel gas system.
>
> "When all compressors are operating at full capacity and if the process vent flow rate continues to increase, flare gas will begin to pass through the liquid seal and flow to the flare stack. Therefore, the safety function of the flare system is maintained in the event of process upset conditions." [12]

The Department is aware that U.S. EPA is currently implementing a nationwide "enforcement initiative" in order to remedy widespread noncompliance at existing petroleum refineries. One of the noncompliance issues that is a focus of this initiative is the frequent and routine use of flares to combust waste gas

[12] See http://www.johnzink.com/products/fgr/html/fgr_jz.htm. Emphasis added.

draft

streams in non-emergency situations, which results in illegal SO_2 emissions in excess of those allowed by the petroleum refinery NSPS (40 CFR part 60, subpart J).[13] As a result of this initiative, U.S. EPA has included provisions relating to flare gas recovery systems in several of the Consent Decrees that U.S. EPA has entered into with operators of existing, non-compliant petroleum refineries. These Consent Decree provisions generally require that the refiners identify the routinely generated, non-emergency waste gas streams that are being combusted in flares. For each such gas stream, the refiner is then required to achieve compliance with the NSPS either by eliminating the gas stream, monitoring its sulfur concentration, or installing a flare gas recovery system to ensure that only exempt (i.e., emergency or process upset) gases are combusted in the flares.[14]

The proposed permit includes stringent requirements pertaining to the minimization of flaring, including a prohibition on combusting in a flare any gas (other than natural gas used as pilot fuel) except process upset gases generated during a malfunction. Pursuant to A.A.C. R18-2-101(65), the term "malfunction" means "any sudden and unavoidable failure of air pollution control equipment, process equipment or a process to operate in a normal and usual manner, but does not include failures that are caused by poor maintenance, careless operation or any other upset condition or equipment breakdown which could have been prevented by the exercise of reasonable care." Gases generated during startup or non-emergency shutdown would not meet this exception and, thus, are prohibited from being combusted in the flares. In addition, the proposed permit includes detailed recordkeeping requirements pertaining to flaring events. For each instance of flaring of any quantity of waste gas, the Permittee is required to identify, record, and report to the Department the cause of the event and the emissions that resulted.

The requirements of the proposed permit, pertaining to minimization of flaring, are more stringent than any other requirements imposed on a petroleum refinery under any air quality regulation or permit terms. In particular, these requirements are considerably more stringent than the provisions of U.S. EPA's Consent Decrees, which do not apply to exempt gases generated during startup or shutdown of refinery process units, and which do not address any flaring events that result in less than 500 lbs of SO_2 in a 24-hour period.

Notwithstanding this comment from U.S. EPA, the Department has not used the phrase "flare gas recovery system" in the BACT analysis for the flare system at the proposed refinery because the phrase does not identify a discrete control

---

[13]See, http://www.epa.gov/compliance/resources/newsletters/civil/enfalert/flaring.pdf.

[14]See, for example, http://www.epa.gov/compliance/resources/decrees/civil/caa/chevron-cd.pdf at Paragraph 54.

alternative for inclusion in the analysis. The Permittee has proposed, and the permit requires, a flare system that combusts only gases generated during malfunctions. By definition, this includes only gases the flaring of which is unavoidable. In order to comply with the permit terms pertaining to minimization of flaring, the design of the petroleum refining process units will have to incorporate features that will ensure that recoverable gases are not flared. These design features are inherent to the process and are not within the scope of the Department's BACT analysis.

H. Thermal Oxidizers, Generally

1. U.S. EPA's comment: *The Department should include a discussion of the thermal oxidizers in the TSD.*

Department's response: The Department disagrees with any suggestion that this Technical Support Document does not include adequate discussion of the thermal oxidizers at the proposed Arizona Clean Fuels refinery.

General descriptions of the thermal oxidizers and their functions within the proposed Arizona Clean Fuels refinery are presented in this Technical Support Document in Section II.N for the Sulfur Recovery Plant Thermal Oxidizer, Section II.Q for the Tank Farm Thermal Oxidizer, Section II.U for the Loading Rack Thermal Oxidizers, and Section II.W for the Wastewater Treatment Plant Thermal Oxidizer.

Emissions from the thermal oxidizers are discussed in this Technical Support Document in Section III.D for the Sulfur Recovery Plant Thermal Oxidizer, Section III.E for the Tank Farm Thermal Oxidizer, Section III.G for the Loading Rack Thermal Oxidizers, and Section III.F for the Wastewater Treatment Plant Thermal Oxidizer.

Applicable emission standards affecting the thermal oxidizers are discussed in this Technical Support Document in Section IV.C.2, Section IV.C.8, and Section IV.E.

The Department's BACT determinations for the thermal oxidizers and the emission units venting to them are discussed in this Technical Support Document in Sections V.C for the Sulfur Recovery Plant Thermal Oxidizer, Section V.F for the Tank Farm Thermal Oxidizer, Section V.G for the Loading Rack Thermal Oxidizers, and Section V.H for the Wastewater Treatment Plant Thermal Oxidizer.

The proposed permit terms for each of the thermal oxidizers are presented in tabular form in Section VI of this Technical Support Document.

2. U.S. EPA's comment: *For all thermal oxidizers, the permit should specify an*

draft

appropriate control efficiency, testing for efficiency and limits, and proper operating conditions (flow rate, residence time, flame temperature) with recordkeeping requirements.

Department's response: Because this comment was made by U.S. EPA Region IX in the context of U.S. EPA's review of the Department's preliminary BACT determinations for the proposed Arizona Clean Fuels refinery, the Department has presumed, for the purpose of preparing this response, that the comment pertains to the Department's determination of BACT for VOC emissions from the sources that will be controlled by thermal oxidizers.

In response to this comment, the Department has revised the draft permit to include a minimum design efficiency for the Tank Farm Thermal Oxidizer and the Wastewater Treatment Plant Thermal Oxidizer and to include monitoring of exhaust gas volumetric flow rate from all five thermal oxidizers. These changes are discussed in greater detail in Sections X.H.2.a through X.H.2.d.

This comment from U.S. EPA, while not lengthy, is far-reaching and raises numerous complex issues, both from a technical standpoint and from a policy standpoint. The comment suggests the inclusion of several different types of provisions for five different thermal oxidizers, each serving to control VOC emissions from very different emission units or groups of emission units, and each with somewhat different proposed permit terms embodying the Department's proposed BACT determinations for VOC emissions. Therefore, the Department's response to this comment is presented issue-by-issue and unit-by-unit.

a. The Draft Permit Conditions for the Sulfur Recovery Plant Thermal Oxidizer Represent BACT and Include Adequate Compliance Demonstration Procedures.

For the Sulfur Recovery Plant Thermal Oxidizer, the preliminary draft permit conditions that were presented to U.S. EPA Region IX included a minimum VOC control efficiency requirement; a requirement for performance testing to demonstrate compliance with the efficiency requirement; a requirement for maintaining the thermal oxidizer combustion chamber temperature at a level at least as high as the minimum level established during the performance test, and which is demonstrated to be indicative of continuous compliance; and requirements for monitoring and recordkeeping to demonstrate compliance with each of the aforementioned emission limits. These draft permit conditions appear to satisfy most of the provisions suggested by the comment from U.S. EPA Region IX. The only provisions that were not included in the preliminary draft permit conditions are those that would prescribe "proper operating conditions," if the Department correctly interprets the comment to suggest that the permit must

prescribe limitations on flow rate, residence time, and flame temperature in order to be sufficient.

In response to this comment, the Department has revised the draft permit to include a requirement for establishing a maximum thermal oxidizer exhaust gas volumetric flow rate, in addition to the existing requirement for a minimum temperature level. The maximum flow rate is to be established, using engineering calculations, at a level that corresponds to a minimum thermal oxidizer combustion chamber residence time of 0.75 seconds. The permit also has been revised to require continuous monitoring to demonstrate compliance with the exhaust gas volumetric flow rate limitation.

The Department strongly disagrees with any suggestion that the Department's BACT determination is inadequate, or that the draft permit conditions are not adequate to provide a continuous indication of the compliance status of the thermal oxidizer with respect to its VOC emission limitations.

(1) Comparison with NESHAP

Each of the two emission units that vent VOC emissions to the Sulfur Recovery Plant Thermal Oxidizer is subject to the process vent provisions of 40 CFR part 63, subpart CC, "National Emission Standards for Hazardous Air Pollutants from Petroleum Refineries." Prior to receiving this comment from U.S. EPA Region IX, the Department had preliminarily determined that the applicable organic HAP emission standards in this NESHAP regulation represent BACT for VOC emissions from these emission units, and that the monitoring and recordkeeping provisions of the NESHAP regulation are adequate to provide a continuous indication of the compliance status of the thermal oxidizer with respect to its VOC emission limitations.

The Department's determination that the organic HAP emission standards in subpart CC represent BACT for VOC emissions from petroleum refinery process vents is supported by the rulemaking procedure used by U.S. EPA in establishing these emission standards. The subpart CC emission standards for process vents at new sources were promulgated by U.S. EPA in 1995 for the purpose of meeting the statutory mandate at Clean Air Act § 112(d). The statute establishes rigid criteria that must be satisfied by U.S. EPA in establishing these emission standards, including § 112(d)(2), which indicates that they "shall require the maximum degree of reduction in emissions [] that the

Administrator, taking into consideration the cost of achieving such emission reduction, and any non-air quality health and environmental impacts and energy requirements, determines is achievable...." In addition, § 112(d)(3) requires that they "shall not be less stringent than the emission control that is achieved in practice by the best controlled similar source, as determined by the Administrator."

Thus, the subpart CC rulemaking manifests two determinations that U.S. EPA made in 1995 with regard to organic HAP emissions from petroleum refinery process vents. First, no source had achieved a more stringent level of control than what is reflected in the subpart CC provisions and in the draft permit conditions. In the parlance used by U.S. EPA, this determination is generally described as establishing the "floor" level of control. Second, after considering costs and other impacts, no more stringent level of control was achievable. In the case of the subpart CC rulemaking for process vents, U.S. EPA established the NESHAP emission standard equal to the "floor" level of control; U.S. EPA did not perform an evaluation of costs and other impacts for any more stringent control options because "[t]here are no available control options that are generally applicable that can achieve emission levels more stringent than the floor." (See *Federal Register*, July 15, 1994, 59 FR 36130 at 36141.)

The criteria set forth in § 112(d)(2) for the establishment of NESHAP emission standards are very similar to those set forth in Clean Air Act § 169(3) for the determination of BACT. Also, the criterion set forth in § 112(d)(3) for the establishment of NESHAP emission standards for new sources are very similar to those set forth in Clean Air Act § 171(3) for the determination of LAER. Based on a review of these statutory criteria, and on a review of the analyses performed and determinations made by U.S. EPA in establishing the NESHAP emission standards for process vents, the Department has determined that the procedure to which U.S. EPA adhered in establishing the NESHAP emission standards for process vents would also have satisfied the criteria for establishing BACT or LAER for either of the process vents that will be controlled by the Sulfur Recovery Plant Thermal Oxidizer.

The Department is not aware of any more recent data indicating that a more stringent level of control has been achieved or has become achievable, either for petroleum refinery process vents in general or for Rich Amine Three Phase Separators or Sour

draft

Water Flash Drums specifically, since U.S. EPA made its determinations in 1995.

The Department notes that the preliminary draft permit included performance testing, monitoring, and recordkeeping requirements (relating to VOC emissions from the Sulfur Recovery Plant Thermal Oxidizer, and from sources venting to that control device) that were essentially identical to those established by U.S. EPA in the NESHAP for petroleum refinery process vents in 40 CFR 63 subpart CC. The Department's preliminary determination with regard to the sufficiency of the proposed performance testing, monitoring, and recordkeeping requirements, in light of the proposed emission limitations and applicable statutory provisions, was consistent with numerous determinations made by U.S. EPA in similar circumstances. For example, U.S. EPA in 1995 promulgated the NESHAP regulation for petroleum refinery process vents at 40 CFR 63 subpart CC as described above. More recently, U.S. EPA promulgated NESHAP emission standards for organic HAP emissions from process vents at miscellaneous organic chemical manufacturing facilities, codified at 40 CFR 63 subpart FFFF and promulgated on November 10, 2003. Each of these regulations includes both emission limitations and compliance demonstration requirements that are essentially identical to those included in the draft permit, and each of these rulemakings manifests a determination by U.S. EPA that the NESHAP compliance demonstration requirements satisfy the applicable statutory provisions for compliance demonstration requirements set forth in Clean Air Act §§ 114(a)(3) and 504(b). This determination has been stated repeatedly by U.S. EPA. For example, in promulgating the original Title V operating permits regulation, U.S. EPA stated the following: "Section 504(c) [of the Act] provides that every permit issued under title V shall contain monitoring requirements 'to assure compliance with the permit terms and conditions.' This statutory provision is implemented through § 70.6(a)(3)(i) of the regulations. If the underlying applicable requirement imposes a requirement to do periodic monitoring or testing (which may consist of recordkeeping designed to serve as monitoring), the permit must simply incorporate this provision under § 70.6(a)(3)(i)(A). [] <u>Any Federal standards promulgated pursuant to the Act amendments of 1990 are presumed to contain sufficient monitoring</u> and, therefore, only § 70.6(a)(3)(i)(A) applies." (Emphasis added.) (See, *Federal Register*, July 21, 1992, 57 FR 32250.)

In addition, in promulgating the Compliance Assurance Monitoring regulation, codified at 40 CFR part 64, U.S. EPA stated the following: "If existing requirements are more rigorous than part 64, those requirements should continue to exist unaffected by part 64. This point is made explicitly in several instances in the final rule. In addition, EPA is committed to developing new emission standards subsequent to the 1990 Amendments with methods specified for directly determining continuous compliance whenever possible, taking into account technical and economic feasibility, and other pertinent factors. In recognition of this EPA commitment, the rule exempts New Source Performance Standards (NSPS) and National Emission Standards for Hazardous Air Pollutants (NESHAP) rules that are proposed after the 1990 Amendments to the Act from part 64 requirements." (Emphasis added.) (See, *Federal Register*, October 22, 1997, 62 FR 54900 at 54904.)

The Department also notes that the preliminary draft permit conditions include greater enforceability than the applicable NESHAP emission standards in at least two respects. The applicable NESHAP requirements specifically relating to the conduct of performance testing require that the test be conducted under representative conditions, as specified in a test plan, but do not require that the test plan be submitted to or approved by the Department or any other agency. After the performance test is completed and the source has commenced operating, the applicable NESHAP requirements, as discussed previously, require monitoring of combustion zone temperature, but do not require monitoring or recording of any parameter that would allow confirmation that the performance test was actually performed under conditions that are representative of worst-case conditions. In contrast, the draft permit conditions, in addition to all of the applicable NESHAP requirements, require the Department's prior approval of the site-specific test plan, and also require continuous monitoring and recording of thermal oxidizer exhaust gas flow rate at all times subsequent to the initial performance test. The exhaust gas flow rate monitoring system is required to conform to U.S. EPA's Performance Specification 6, codified in appendix B to 40 CFR part 60, which the Department considers representative of the state-of-the-art in exhaust flow rate monitoring. These additional compliance demonstration provisions will provide the Department with information that can be used to maintain the enforceability of the Sulfur Recovery Plant Thermal Oxidizer VOC emission limitations, above and beyond those provisions that have been determined by U.S. EPA to meet all applicable statutory

requirements for compliance demonstration provisions.

(2) Flame Temperature

The Department specifically disagrees with the comment from U.S. EPA Region IX to the extent that it suggests that "flame temperature" is preferable to combustion chamber temperature as an indicator of thermal oxidizer performance. The Department considers flame temperature to be a poor surrogate for VOC destruction efficiency, as the relationship between these two variables is complex and largely unpredictable. Moreover, the Department is not aware of any technology that would enable continuous monitoring of flame temperature.

The Department notes that its selection of combustion chamber temperature as a surrogate parameter indicative of Sulfur Recovery Plant Thermal Oxidizer performance is consistent with the determinations made by U.S. EPA in establishing the NESHAP emission standards for organic HAP emissions from petroleum refinery process vents in 40 CFR 63 subpart CC, as discussed in Section X.H.2.a(1) herein; and in establishing more recent NESHAP emission standards for similar sources, such as those for organic HAP emissions from process vents at miscellaneous organic chemical manufacturing facilities, codified at 40 CFR 63 subpart FFFF and promulgated on November 10, 2003.

(3) Flow Rate and Residence Time

The residence time achieved in a combustion device, such as the Sulfur Recovery Plant Thermal Oxidizer, is a critical factor in achieving good combustion. For this reason, specification of the minimum residence time of a thermal oxidizer is a commonly and effectively used format for VOC emission limitations. However, residence time is not a directly measurable parameter. Instead, it is a calculated parameter, representing the quotient of exhaust gas volumetric flow rate and reactor volume. Because the reactor volume is a fixed parameter, the residence time in a particular thermal oxidizer is inversely proportional to exhaust gas volumetric flow rate; *e.g.*, if the flow rate doubles, the residence time is decreased by half. Flow rate, unlike residence time, is a parameter that can be readily monitored.

Given the considerations above, and in light of the fact that the comment from U.S. EPA Region IX was ambiguous as to the thermal oxidizer operating parameter specifications that were

being suggested, the Department has made several presumptions for the purpose of preparing this response. Specifically, the Department presumes that U.S. EPA is suggesting that the permit must specify either a minimum residence time or a maximum exhaust gas volumetric flow rate; that the permit must require a design evaluation and recordkeeping to show the exhaust gas volumetric flow rate that corresponds to the minimum residence time; and that the permit must require exhaust gas flow rate monitoring and recordkeeping. The Department presumes that U.S. EPA is not suggesting that the permit must specify minimum or maximum flow rates for waste gas, auxiliary fuel, exhaust gas, or any other stream; or that the permit must require direct monitoring of residence time.

The Department is in general agreement with U.S. EPA Region IX that, in order to ensure that maximum achievable VOC emission reduction is being achieved continuously, specification and monitoring of both temperature and residence time (or flow rate) is necessary and appropriate. The Department also agrees that the compliance demonstration requirements established by U.S. EPA in 40 CFR 63 subpart CC, and various other NESHAP emission standards for organic HAP emission sources using combustion devices for emission control, are not adequate to provide assurance of continuous compliance, in spite of the statutory mandate for such assurance. Accordingly, the Department has added to the draft permit provisions requiring that the Permittee establish a maximum exhaust gas volumetric flow rate for the Sulfur Recovery Plant Thermal Oxidizer and requiring that the Permittee monitor continuously to demonstrate compliance with this requirement. The Department strongly disagrees with the comment from U.S. EPA Region IX to the extent that it suggests that the permit, in order to satisfy any statutory or regulatory criteria, must include, in addition to those emission limitations and monitoring requirements included in the revised draft permit, any additional emission limitations or monitoring requirements for the Sulfur Recovery Plant Thermal Oxidizer.

b. The Draft Permit Conditions for the Loading Rack Thermal Oxidizers Represent BACT and Include Adequate Compliance Demonstration Procedures.

For the Truck Loading Rack Thermal Oxidizer and the Rail Car Loading Rack Thermal Oxidizer, the preliminary draft permit conditions that were presented to U.S. EPA Region IX included maximum VOC emission limitations expressed in terms of mass VOC emission rate per unit

volume of product loaded; requirements for performance testing to demonstrate compliance with the VOC emission rate limitation; a requirement for maintaining the thermal oxidizer combustion chamber temperature at a level at least as high as the minimum level established during the performance test, and which is demonstrated to be indicative of continuous compliance; and requirements for monitoring and recordkeeping to demonstrate compliance with each of the aforementioned emission limits. These draft permit conditions did not conform to the provisions suggested by the comment from U.S. EPA Region IX because they did not prescribe a minimum control efficiency; did not include any monitoring or recordkeeping relating to a prescribed control efficiency requirement; and did not prescribe "proper operating conditions," if the Department correctly interprets the comment to suggest that the permit must prescribe limitations on flow rate, residence time, and flame temperature in order to be sufficient.

In response to this comment, the Department has revised the draft permit to include a requirement for establishing a maximum thermal oxidizer exhaust gas volumetric flow rate, in addition to the existing requirement for a minimum temperature level. The maximum flow rate is to be established, using engineering calculations, at a level that corresponds to a minimum thermal oxidizer combustion chamber residence time of 0.75 seconds. The permit also has been revised to require continuous monitoring to demonstrate compliance with the exhaust gas volumetric flow rate limitation.

The Department strongly disagrees with any suggestion that the Department's BACT determination is inadequate, or that the draft permit conditions are not adequate to provide a continuous indication of the compliance status of the thermal oxidizers with respect to their VOC emission limitations.

(1) Comparison with NESHAP

Each of the gasoline product loading racks that vent VOC emissions to the Loading Rack Thermal Oxidizers is subject to the provisions of 40 CFR part 63, subpart CC, "National Emission Standards for Hazardous Air Pollutants from Petroleum Refineries." The Department has determined that the format for the applicable organic HAP emission standards in this NESHAP regulation represents an appropriate format for the VOC BACT emission limitations for both the gasoline product loading racks and the distillate product loading racks; that the numerical NESHAP emission standards are not representative of BACT; and that this NESHAP regulation includes monitoring and recordkeeping provisions, applicable to thermal oxidizers

used to demonstrate compliance with the NESHAP emission standard, that are adequate to provide a continuous indication of the compliance status of the Loading Rack Thermal Oxidizers with respect to their VOC BACT emission limitations.

The Department's preliminary BACT determination for VOC emissions from the gasoline product loading racks, as discussed in Section V.G herein, is represented by an emission limitation of 1.25 pounds per million gallons loaded. This emission limitation is equal to 0.15 milligrams per liter of gasoline loaded. The NESHAP emission standard for these emission units under subpart CC is 10 milligrams per liter, approximately 70 times higher than the proposed BACT level. The Department's determination regarding the control level representing BACT for VOC emissions from the loading racks is supported by the rulemaking procedure used by U.S. EPA in establishing the NESHAP emission standards for these emission units. The subpart CC emission standards for gasoline product loading racks at new sources were promulgated by U.S. EPA in 1995 for the purpose of meeting the statutory mandate at Clean Air Act § 112(d). As described in detail in Section X.H.2.a(1) herein, the subpart CC rulemaking manifests two determinations that U.S. EPA made in 1995 with regard to organic HAP emissions from gasoline product loading racks. First, no source had achieved a more stringent level of control than what is reflected in the subpart CC provisions. This determination is described by U.S. EPA as follows: "To establish the control requirements for new sources the Agency is required to select controls not less stringent (floor) than the control achieved in practice by the best similar source. The best performing control systems at similar sources, or systems achieving the maximum degree of reduction in emissions, are those systems designed and operated to meet the 10 mg TOC per liter standard." (See *Federal Register*, February 8, 1994, 59 FR 5868 at 5878.) Second, U.S. EPA determined, after considering costs and other impacts, that no more stringent level of control was achievable. In the case of the subpart CC rulemaking for gasoline product loading racks, U.S. EPA established the NESHAP emission standard equal to the "floor" level of control; U.S. EPA did not perform an evaluation of costs and other impacts for any more stringent control options because no such options were identified. As the control equipment configuration proposed for the gasoline product loading racks at the Arizona Clean Fuels refinery clearly is technically feasible, and more effective than the "floor" level of control identified by U.S. EPA in 1995, and given the statutory mandate to consider the maximum achievable degree of emission

reduction, the Department is unclear as to why U.S. EPA did not identify and consider this control option in the subpart CC rulemaking.

As a result of the Department's BACT analysis, the proposed permit conditions include a VOC emission limitation of 1.25 pounds per million gallons of gasoline products loaded. The Department is not aware of any data indicating that more stringent levels of VOC control have been achieved or have been demonstrated to be achievable for the loading of gasoline products into tank trucks or rail cars. The comment from U.S. EPA Region IX neither provides nor hints at the existence of any such data.

As a result of the Department's BACT analysis, the proposed permit conditions include a VOC emission limitation of 22.0 pounds per million gallons of distillate product loaded. The Department is not aware of any data indicating that more stringent levels of VOC control have been achieved for the loading of distillate products into tank trucks or rail cars.

(2) Format of Emission Limitations

The Department has determined that the most appropriate format for the primary VOC BACT emission limitations for both the gasoline product loading racks and the distillate product loading racks is a limit on mass emission rate per unit volume of product loaded. This format is the same as that used for the applicable organic HAP emission standards in the applicable NESHAP regulation. (As discussed above, the Department has determined that the numerical NESHAP emission standards are not representative of BACT, but this determination is independent of the format of the emission standards.)

The rationale used in selecting the format of the NESHAP emission standards for loading racks was described by U.S. EPA as follows.

"Since emissions from the vapor collection system can be measured, standards of performance in the form of a numerical emission limit can be applied to emissions from the vapor collection system. Several formats for these standards of performance are possible. Three formats considered for limiting emissions from the vapor collection system include a concentration standard, a control efficiency standard, and a mass emissions standard. A vapor processing system would be necessary under any of these formats to achieve the required emission

limit.

"A format expressed in terms of concentration would limit the HAP concentration in the exhaust from the vapor processing system. However, test data from these systems indicate a variation in exhaust gas flow rates and concentrations among the various types of systems. Separate concentration limits might be required for each type of control system at each affected terminal if a concentration format were selected.

"Information from the manufacturers and test results indicate that the control efficiencies of the processing systems are dependent on the inlet concentration to the processor. The data further indicate that concentrations at the inlet of the processor vary considerably from terminal to terminal. It would be difficult to adjust the calculations to account for these variations. Also, control efficiency testing would require two separate measurements of pollutant concentration instead of just one measurement as required in the concentration or mass approaches.

"A mass standard based upon the vapor processor outlet emissions would involve a simpler, less expensive, and more straightforward test procedure. This testing would require measurement of mass emissions at the processor outlet only. In addition, the affected industry has over 15 years experience in conducting this type of testing at bulk gasoline terminals and, in fact, this is the type of test data analyzed to determine the MACT control levels for the facilities to be regulated in this source category. Due to these considerations, a mass emission format, based on measurements at the outlet of the vapor processor only, was selected for the standard to be applied to bulk terminal tank truck and railcar loading emissions." (See *Federal Register*, February 8, 1994 59 FR 5868 at 5882.)

The Department considers this to be a well-reasoned justification with a logical and desirable outcome. The Department also considers U.S. EPA's rationale to be applicable and transferable to its decision regarding the appropriate format for the VOC BACT emission limitations for the gasoline and distillate product loading racks at the proposed Arizona Clean Fuels refinery. This is supported by the similarity between the statutory provisions governing the Department's determination of BACT and U.S. EPA's establishment of NESHAP emission standards.

The statutory and regulatory provisions governing the Department's determination of BACT are as follows. Clean Air Act § 169(3) defines BACT as "an <u>emission limitation</u> based on the maximum degree of reduction of each pollutant subject to regulation under this Act emitted from or which results from any

major emitting facility, which the permitting authority, on a case-by-case basis, taking into account energy, environmental, and economic impacts and other costs, determines is achievable for such facility through application of production processes and available methods, systems, and techniques, including fuel cleaning, clean fuels, or treatment or innovative fuel combustion techniques for control of each such pollutant." [Emphasis added.]

Clean Air Act § 302(k) defines the terms "emission limitation" and "emission standard" to mean "a requirement established by the State or the Administrator which limits the quantity, rate, or concentration of emissions of air pollutants on a continuous basis, including any requirement relating to the operation or maintenance of a source to assure continuous emission reduction, and any design, equipment, work practice or operational standard promulgated under this Act." [Emphasis added.]

Similarly, A.A.C. R18-2-101.19 defines BACT as "an emission limitation, including a visible emissions standard, based on the maximum degree of reduction for each air pollutant listed in R18-2-101(97)(a) which would be emitted from any proposed major source or major modification, taking into account energy, environmental, and economic impact and other costs, determined by the Director in accordance with R18-2-406(A)(4) to be achievable for such source or modification." [Emphasis added.]

A.A.C. R18-2-101.37 defines the terms "emission standard" and "emission limitation" to mean "a requirement established by the state, a local government, or the Administrator which limits the quantity, rate, or concentration of emissions of air pollutants on a continuous basis, including any requirements which limit the level of opacity, prescribe equipment, set fuel specifications, or prescribe operation or maintenance procedures for a source to assure continuous emission reduction." [Emphasis added.]

The Department does not interpret any of the above statutory or regulatory provisions to suggest that a permit term specifying a minimum control efficiency (*i.e.*, limiting mass emission rate as a function of uncontrolled emission rate) is in any way preferable to a permit term limiting mass emissions a function of unit throughput. In fact, the selection of thermal oxidizer control efficiency as the format of the primary VOC BACT emission limitation, as suggested by this comment from U.S. EPA Region IX, would have the effect of discouraging product recovery and pollution prevention, because higher control efficiencies are

draft

more easily achieved when uncontrolled emission rates are higher. Such an effect would be in direct conflict with Clean Air Act § 101(c), which states that "[a] primary goal of this Act is to encourage or otherwise promote reasonable Federal, State, and local governmental actions, consistent with the provisions of this Act, for pollution prevention."

By comparison, the statutory provisions governing U.S. EPA's establishment of NESHAP emission standards for new sources are as follows. Clean Air Act § 112(d)(1) requires that U.S. EPA promulgate the NESHAP regulations and that these regulations must establish "emission standards." [Emphasis added.]

Clean Air Act § 302(k), as described above, defines the phrase "emission standard" in exactly the same terms as it defines the phrase "emission limitation."

Clean Air Act § 112(d)(2) further requires that "emission standards" established in NESHAP regulations "shall require the maximum degree of reduction in emissions [] that the Administrator, taking into consideration the cost of achieving such emission reduction, and any non-air quality health and environmental impacts and energy requirements, determines is achievable...."

With respect to the appropriate format of BACT "emission limitations" and NESHAP "emission standards," the Department considers the relevant statutory and regulatory provisions to be so similar as to be indistinguishable. The Department considers these similarities, in conjunction with the decision by U.S. EPA to express the applicable NESHAP emission standards in 40 CFR 63 subpart CC as a limit on mass emission rate per unit volume of product loaded, to be supportive of the Department's selection of this format for the VOC BACT emission limitations for gasoline product loading racks and distillate product loading racks.

(3) Flame Temperature

The Department specifically disagrees with the comment from U.S. EPA Region IX to the extent that it suggests that "flame temperature" is preferable to combustion chamber temperature as an indicator of thermal oxidizer performance. The Department considers flame temperature to be a poor surrogate for VOC destruction efficiency, as the relationship between these two variables is complex and largely unpredictable. Moreover,

the Department is not aware of any technology that would enable continuous monitoring of flame temperature.

The Department notes that its selection of combustion chamber temperature as the surrogate parameter indicative of Loading Rack Thermal Oxidizer performance is consistent with the determinations made by U.S. EPA in establishing the NESHAP emission standards for petroleum refinery gasoline loading racks in 40 CFR 63 subpart CC and in more recent NESHAP emission standards for similar sources, such as those for loading racks at miscellaneous organic chemical manufacturing facilities, codified at 40 CFR 63 subpart FFFF and promulgated on November 10, 2003.

(4) Flow Rate and Residence Time

With regard to U.S. EPA's comments pertaining to flow rate and residence time, and for the reasons outlined in Section X.H.2.a(3) herein, the Department has made several presumptions for the purpose of preparing this response. Specifically, as to the Loading Rack Thermal Oxidizers, the Department presumes that U.S. EPA is suggesting that the permit must specify either a minimum residence time or a maximum exhaust gas volumetric flow rate; that the permit must require a design evaluation and recordkeeping to show the exhaust gas volumetric flow rate that corresponds to the minimum residence time; and that the permit rate monitoring and recordkeeping. The Department presumes that U.S. EPA is not suggesting that the permit must specify minimum must require exhaust gas flow or maximum flow rates for waste gas, auxiliary fuel, exhaust gas, or any other stream; or that the permit must require direct monitoring of residence time.

The Department is in general agreement with U.S. EPA Region IX that, in order to ensure that maximum achievable VOC emission reduction is being achieved continuously, specification and monitoring of both temperature and residence time (or flow rate) is necessary and appropriate. The Department also agrees that the compliance demonstration requirements established by U.S. EPA in 40 CFR 63 subpart CC, and various other NESHAP emission standards for organic HAP emission sources using combustion devices for emission control, are not adequate to provide assurance of continuous compliance, in spite of the statutory mandate for such assurance. Accordingly, the Department has added to the draft permit provisions requiring that the Permittee establish a maximum exhaust gas volumetric

flow rate for each Loading Rack Thermal Oxidizer and requiring that the Permittee monitor continuously to demonstrate compliance with these requirements. The Department strongly disagrees with the comment from U.S. EPA Region IX to the extent that it suggests that the permit, in order to satisfy any statutory or regulatory criteria, must include, in addition to those emission limitations and monitoring requirements included in the revised draft permit, any additional emission limitations or monitoring requirements for the Loading Rack Thermal Oxidizers.

c. The Draft Permit Conditions for the Tank Farm Thermal Oxidizer Represent BACT and Include Adequate Compliance Demonstration Procedures.

The Tank Farm Thermal Oxidizer at the proposed Arizona Clean Fuels refinery serves only to control VOC emissions from 28 internal floating-roof storage tanks that are referred to collectively as the Group "B" Storage Tanks. As described below and in Section V.F.1 herein, the required use of the Tank Farm Thermal Oxidizer represents only a portion of the Department's preliminary BACT determination for VOC emissions from the Group "B" Storage Tanks. Therefore, any discussion of the adequacy of the BACT determination for VOC emissions from the Tank Farm Thermal Oxidizer necessarily represents a discussion of the adequacy of the BACT determination for the Group "B" Storage Tanks. The cited comment from U.S. EPA Region IX is addressed in this context.

For the Tank Farm Thermal Oxidizer, the draft permit conditions that were presented to U.S. EPA Region IX included a specified minimum design destruction efficiency level; a specified minimum residence time; a specified minimum thermal oxidizer combustion chamber temperature; requirements for preparing a design evaluation documenting that the specified minimum temperature and residence time will be achieved continuously; and requirements for monitoring and recordkeeping to demonstrate compliance with the specified minimum temperature. These preliminary draft permit conditions did not conform to the provisions suggested by the comment from U.S. EPA Region IX because they did not prescribe a minimum control efficiency; did not include any monitoring or recordkeeping relating to a prescribed control efficiency requirement; and do not prescribe "proper operating conditions," if the Department correctly interprets the comment to suggest that the permit must prescribe limitations on flow rate and flame temperature in order to be sufficient.

In response to this comment, the Department has revised the draft permit

to include two substantive new requirements for the Tank Farm Thermal Oxidizer. First, in addition to the existing requirement for a 95 percent minimum design VOC destruction efficiency as required by 40 CFR 63 subpart CC, the revised draft permit also includes a specified minimum design VOC destruction efficiency of 99.9 percent representing BACT. Second, the revised draft permit includes a requirement for establishing a maximum thermal oxidizer exhaust gas volumetric flow rate, in addition to the existing requirement for a minimum temperature level. The maximum flow rate is to be established, using engineering calculations, at a level that corresponds to a minimum thermal oxidizer combustion chamber residence time of 0.75 seconds. The permit also has been revised to require continuous monitoring to demonstrate compliance with the exhaust gas volumetric flow rate limitation.

The Department strongly disagrees with any suggestion that the Department's BACT determination is inadequate, or that the draft permit conditions are not adequate to provide a continuous indication of the compliance status of the thermal oxidizer with respect to its VOC emission limitations.

(1) Design Standards and Work Practice Requirements as BACT.

The Department considers the draft permit conditions representing BACT for VOC emissions from the Group "B" Storage Tanks to be "design standards" and "work practice requirements." This terminology is used throughout the discussion that follows.

It is unclear to the Department whether the cited comment from U.S. EPA Region IX reflects an individual's belief that design standards and work practice requirements generally cannot be used to meet the BACT requirements, or a belief that the specific design standards and work practice requirements included in the proposed permit do not reflect BACT. Both possibilities are addressed herein.

Clean Air Act § 169(3) defines BACT as "an <u>emission limitation</u> based on the maximum degree of reduction of each pollutant subject to regulation under this Act emitted from or which results from any major emitting facility, which the permitting authority, on a case-by-case basis, taking into account energy, environmental, and economic impacts and other costs, determines is achievable for such facility through application of production processes and available methods, systems, and techniques, including fuel cleaning, clean fuels, or treatment or

innovative fuel combustion techniques for control of each such pollutant." [Emphasis added.]

Clean Air Act § 302(k) defines the terms "emission limitation" and "emission standard" to mean "a requirement established by the State or the Administrator which limits the quantity, rate, or concentration of emissions of air pollutants on a continuous basis, including any requirement relating to the operation or maintenance of a source to assure continuous emission reduction, and any design, equipment, work practice or operational standard promulgated under this Act." [Emphasis added.]

A.A.C. R18-2-101.19 defines BACT as "an emission limitation, including a visible emissions standard, based on the maximum degree of reduction for each air pollutant listed in R18-2-101(97)(a) which would be emitted from any proposed major source or major modification, taking into account energy, environmental, and economic impact and other costs, determined by the Director in accordance with R18-2-406(A)(4) to be achievable for such source or modification." [Emphasis added.]

A.A.C. R18-2-101.37 defines the terms "emission standard" and "emission limitation" to mean "a requirement established by the state, a local government, or the Administrator which limits the quantity, rate, or concentration of emissions of air pollutants on a continuous basis, including any requirements which limit the level of opacity, prescribe equipment, set fuel specifications, or prescribe operation or maintenance procedures for a source to assure continuous emission reduction." [Emphasis added.]

Based on the foregoing, the Department has determined that design standards and work practice requirements can be used to meet the statutory and regulatory provisions relating to BACT emission limitations.

(2) Comparison of BACT Emission Limitation Format with Format of NESHAP Emission Standards

The Department's preliminary BACT determination for VOC emissions from the Group "B" Storage Tanks, as discussed in Section V.F.1 herein, includes the following emission limitations: a requirement to equip each tank with an internal floating roof meeting specific design requirements; a requirement to maintain and operate the internal floating roof in accordance with certain specifications; a requirement to collect the vapors from the headspace in each tank and to route those vapors to the

Tank Farm Thermal Oxidizer; a requirement to design the Tank Farm Thermal Oxidizer for a VOC destruction efficiency of at least 99.9 percent; and requirements to design, maintain, and operate the Tank Farm Thermal Oxidizer such that it meets a specified minimum combustion chamber temperature of 1,600 ºF, based on a five-minute average, and at a maximum exhaust gas flow rate that corresponds to a specified minimum residence time of 0.75 seconds.

Each of the Group "B" Storage Tanks is subject to the provisions of 40 CFR part 63, subpart CC, "National Emission Standards for Hazardous Air Pollutants from Petroleum Refineries." Therefore, in addition to the BACT emission limitations described above, these storage tanks are subject to the NESHAP emission standards in subpart CC. As discussed in Section X.H.2.c(3) herein, the Department has determined that the emission control level required by applicable organic HAP emission standards in subpart CC is not representative of BACT for VOC emissions from the Group "B" Storage Tanks.

The Department has further determined that the format selected by U.S. EPA for the applicable organic HAP emission standards in subpart CC is inappropriate for establishing BACT for VOC emissions from the Group "B" Storage Tanks. The basis for this determination is discussed in the following paragraphs.

The subpart CC NESHAP emission standards applicable to the Group "B" Storage Tanks allow the source to select any of several control options that are deemed by U.S. EPA to be equivalent for the purposes of controlling organic HAP emissions. For the purposes of this discussion, only two of these control options are relevant: the option to use an internal floating roof, in which case no "end-of-pipe" air pollution control equipment is required, and the option to use a fixed-roof storage tank in conjunction with a closed-vent system and a thermal oxidizer or some other end-of-pipe air pollution control device.

If an internal floating-roof tank is used to satisfy the NESHAP requirements, subpart CC includes design specifications and work practice requirements for the tank generally and for the internal floating roof. Permit terms based on these requirements are included in the draft permit conditions for the Group "B" Storage Tanks. As the comment from U.S. EPA Region IX did not cite these requirements as deficiencies in the draft permit, the Department's response includes no further discussion of these requirements.

draft

If a closed-vent system and a thermal oxidizer are used to satisfy the NESHAP requirements, subpart CC includes design specifications and work practice requirements for the thermal oxidizer. The Department considers this approach to be appropriate, in general, for both for NESHAP emission standards and for BACT emission limitations applicable to thermal oxidizers used to control emissions from storage tanks. In addition, because U.S. EPA has promulgated regulations implementing the statutory mandate for enhanced monitoring and compliance certification under Clean Air Act §§ 114(a)(3) and 504(b) to give special treatment to subpart CC and other NESHAP regulations, the Department considers the format of the subpart CC thermal oxidizer design specifications and work practice requirements to be reasonable and appropriate for that regulation. However, the regulations promulgated by U.S. EPA for the purpose of implementing the statutory mandate for enhanced monitoring and compliance certification under Clean Air Act §§ 114(a)(3) and 504(b) do not provide the same special treatment for BACT emission limitations established by the Department. For this reason and others, the Department has determined that a different format is more appropriate for the Tank Farm Thermal Oxidizer design specifications and work practice requirements. The Department's considerations with regard to the effect of the statutory enhanced monitoring and compliance certification provisions are discussed in Section X.H.2.c(4) herein.

The design specifications and work practice requirements in subpart CC include a requirement that the thermal oxidizer "shall be designed and operated to reduce inlet emissions of total organic HAP by 95 percent or greater." This might appear to be a numerical limit on emission rate, but the Department contends that it actually is a design specification and a work practice requirement, in light of the following additional provisions in subpart CC:

"The owner or operator shall either prepare a design evaluation, which includes the information specified in [paragraph (i)], or submit the results of a performance test as described in [paragraph (ii)].

"(i) The design evaluation shall include documentation demonstrating that the control device being used achieves the required control efficiency during reasonably expected maximum filling rate. This documentation is to include a description of the gas stream which enters the control device, including flow and organic HAP content under varying liquid level conditions, and the information specified in [paragraphs (A) through (E)], as applicable.

"(B) If an enclosed combustion device with a minimum residence time of 0.5 seconds and a minimum temperature of 760 °C is used to meet the emission reduction requirement [of 95 percent], documentation that those conditions exist is sufficient to meet the requirements of [this section].

In other words, although the NESHAP regulation includes mention of a 95 percent control efficiency requirement, which the Department would normally consider to be a numerical limit on emission rate, compliance with this emission limitation can be demonstrated by preparing a design evaluation documenting that the thermal oxidizer will achieve a specified minimum residence time and a specified minimum temperature. In effect, then, the NESHAP emission standards are design specifications and work practice requirements; there is no independently enforceable, numerical limit on emission rate. The requirements actually imposed on a source owner or operator by these NESHAP emission standards are almost identical to those imposed by the draft permit conditions for the Tank Farm Thermal Oxidizer at the proposed Arizona Clean Fuels refinery, except that the draft permit conditions are much more stringent.

As discussed in detail in Section X.H.2.c(1) herein, the statutory and regulatory provisions governing the Department's determination of BACT explicitly allow the use of design standards and work practice requirements. Of course, these statutory and regulatory provisions would also allow the use of a specified minimum control efficiency, or any number of other formats for the BACT emission limitation. In selecting the most appropriate format for permit conditions representing BACT for VOC emissions from the Tank Farm Thermal Oxidizer, the Department's intent was to develop permit conditions that would be practicably enforceable and would require the maximum degree of reduction in VOC emissions on a continuous basis. The Department considered several possible formats before selecting those that are included in the draft permit conditions.

The Department considered establishing an independently enforceable, specified minimum VOC control efficiency for the Tank Farm Thermal Oxidizer. The Department rejected this format for two reasons. First, expressing the BACT emission limitation as a control efficiency requirement to be achieved continuously creates difficulties in implementing the statutory mandate for enhanced monitoring and compliance certification under Clean Air Act §§ 114(a)(3) and 504(b). These difficulties are discussed in detail in Section X.H.2.c(4) herein. Second, the

Department considers this format, by itself, to be inadequate for the purposes of requiring the maximum degree of reduction in VOC emissions on a continuous basis. If this format were used, the minimum control efficiency would have to be established at a level that is continuously achievable, with an adequate compliance margin. Because high control efficiency levels are more readily achieved in a thermal oxidizer at higher inlet concentrations, the "worst-case" conditions for the purpose of determining the continuously achievable control efficiency level at the Tank Farm Thermal Oxidizer would be would be representative of those periods with maximum waste gas flow rate and minimum inlet VOC concentration. For the purposes of this discussion, the Department has assumed that the maximum, continuously achievable VOC control efficiency level for the Tank Farm Thermal Oxidizer is 98 percent and that, in order to ensure compliance with this requirement, the thermal oxidizer would have to be designed and operated to achieve a minimum residence time of 0.75 seconds and a minimum combustion chamber temperature of 1,600 °F. (These are the minimum residence time and the minimum temperature specified in the draft permit conditions. Although the Department has not conducted an exhaustive and quantitative analysis of the continuously achievable control efficiency level, the Department considers 98 percent to be a reasonable estimate; however, as shown by the following discussion, a quantitative determination of the continuously achievable control efficiency level is not material to the Department's decision.) Fundamental engineering principles dictate that, if a residence time of 0.75 seconds and a minimum temperature of 1,600 °F will achieve 98 percent control efficiency under the worst-case conditions described above, the same thermal oxidizer will achieve greater than 98 percent control efficiency under other conditions. For instance, during periods of relatively low waste gas flow rate, residence time will increase; if all other parameters are held constant, control efficiency also will increase. If BACT were expressed as a minimum 98 percent control efficiency, the source owner or operator could reduce auxiliary fuel input, with a corresponding reduction in combustion chamber temperature, and still comply with the emission limitation. The proposed permit condition would require that the minimum temperature of 1,600 °F be maintained, even when residence time is higher than 0.75 seconds, and would thus result in a control efficiency in excess of 98 percent. Based on this analysis, the Department concludes that an independently enforceable, minimum control efficiency format would not require the maximum degree of reduction in VOC emissions achievable on a continuous basis.

The Department also considered using a "nominal" control efficiency requirement, as U.S. EPA did in establishing the NESHAP emission standard for similar thermal oxidizers in 40 CFR 63 subpart CC, but rejected this format for two reasons. First, expressing the BACT emission limitation as a "nominal" control efficiency requirement creates difficulties in implementing the statutory mandate for enhanced monitoring and compliance certification under Clean Air Act §§ 114(a)(3) and 504(b). These difficulties are discussed in detail in Section X.H.2.c(4) herein. Second, the Department considers this format to be inadequate for the purposes of requiring the maximum degree of reduction in VOC emissions on a continuous basis. Using the design standards and work practice requirements in subpart CC to illustrate: Subpart CC allows compliance to be demonstrated by documenting that a minimum residence time of 0.5 seconds and a minimum temperature of 1,400 °F will be achieved. As an alternative to that demonstration, the source owner or operator can demonstrate compliance by preparing a design evaluation, the primary engineering considerations in which will be the pollutant autoignition temperature, the minimum thermal oxidizer combustion chamber residence time, and the minimum thermal oxidizer combustion chamber temperature. Presumably, given the option to comply by achieving the specified parameters, the source owner or operator is going to elect to comply using the "design evaluation" alternative only if it is cheaper and easier to meet; for example, if the design evaluation for this particular source shows that the nominal 95 percent control efficiency requirement can be met with 0.5 seconds residence time and 1,300 °F minimum temperature. Clearly, though, in establishing the subpart CC emission standards, U.S. EPA determined that a minimum residence time of 0.5 seconds and a minimum temperature of 1,400 °F are achievable and technically feasible. Fundamental engineering principles dictate that a greater VOC destruction efficiency will be achieved at 1,400 °F than at 1,300 °F. No analysis of economic impacts or other considerations is required in order for the source owner or operator to elect the less effective, 1,300 °F minimum temperature compliance option. Based on this analysis, the Department concludes that the "nominal control efficiency" format used by U.S. EPA in establishing the NESHAP emission standards does not require the maximum degree of reduction in VOC emissions achievable on a continuous basis.

Ultimately, in response to the comment from U.S. EPA Region

IX regarding the preliminary draft permit conditions, the Department elected to add to the permit a requirement for a VOC destruction efficiency design level of at least 99.9 percent. The format of this requirement differs from the "nominal" control efficiency format used by U.S. EPA in the NESHAP in that the draft permit term uses the phrase "designed to achieve" rather than the phrase "designed and operated to reduce." As noted previously, the intent and effect of these phrases is the same, but the phrasing used by the Department will not create difficulties in implementing the statutory mandate for enhanced monitoring and compliance certification under Clean Air Act §§ 114(a)(3) and 504(b), as discussed in detail in Section X.H.2.c(4) herein.

(3) Comparison of BACT Control Level with NESHAP Control Level

The proposed VOC emission limitations for the Group "B" Storage Tanks include the following: a requirement to equip each tank with an internal floating roof meeting specific design requirements; a requirement to maintain and operate the internal floating roof in accordance with certain specifications; a requirement to collect the vapors from the headspace in each tank and to route those vapors to the Tank Farm Thermal Oxidizer; a requirement to design the Tank Farm Thermal Oxidizer for a VOC destruction efficiency of at least 99.9 percent; and requirements to design, maintain, and operate the Tank Farm Thermal Oxidizer such that it meets a specified minimum combustion chamber temperature of 1,600 ºF, based on a five-minute average, and at a maximum exhaust gas flow rate that corresponds to a specified minimum residence time of 0.75 seconds. The Department estimates that the emission limitations relating to the use of an internal floating roof will reduce long-term average VOC emissions by 95 percent and that the emission limitations relating to the use of a thermal oxidizer will reduce these emissions by a further 98.5 percent. Thus, the Department estimates that this combination of emission limitations will result in a reduction in long-term average VOC emissions well in excess of 99.9 percent.

The Department is not aware of any data indicating that more stringent levels of VOC control have been achieved or have been demonstrated to be achievable for petroleum liquid storage tanks. The comment from U.S. EPA Region IX neither provides nor hints at the existence of any such data.

In addition to being subject to these BACT requirements, each

of the Group "B" Storage Tanks is subject to the NESHAP emission standards in 40 CFR part 63, subpart CC. The NESHAP emission standards allow the source to select any of several control options that are deemed by U.S. EPA to be equivalent for the purposes of controlling organic HAP emissions. One of the control options is the use of an internal floating-roof tank; the NESHAP design specifications and work practice requirements for this control option are included in the draft permit conditions for the Group "B" Storage Tanks. Thus, in order to achieve compliance with the applicable requirements of the NESHAP regulation at the proposed Arizona Clean Fuels refinery, the Tank Farm Thermal Oxidizer would not be required.

The Department and the U.S. EPA estimate that the NESHAP emission standards relating to the use of an internal floating roof will reduce long-term average VOC emissions by 95 percent. Thus, the NESHAP emission standard for the Group "B" storage tanks under subpart CC would allow emissions approximately 70 times higher than the proposed BACT level.

The Department's determination regarding the control level representing BACT for VOC emissions from the Group "B" Storage Tanks is supported by the rulemaking procedure used by U.S. EPA in establishing the NESHAP emission standards for these storage tanks. The subpart CC emission standards for storage tanks at new sources were promulgated by U.S. EPA in 1995 for the purpose of meeting the statutory mandate at Clean Air Act § 112(d). As described in detail in Section X.H.2.a(1) herein, the subpart CC rulemaking manifests two determinations that U.S. EPA made in 1995 with regard to organic HAP emissions from storage tanks at petroleum refineries. First, no source had achieved a more stringent level of control than what is reflected in the subpart CC provisions. Second, U.S. EPA determined, after considering costs and other impacts, that no more stringent level of control was achievable. In the case of the subpart CC rulemaking for storage tanks, U.S. EPA established the NESHAP emission standard equal to the "floor" level of control; U.S. EPA did not perform an evaluation of costs and other impacts for any more stringent control options because no such options were identified. As the control equipment configuration proposed for the Group "B" Storage Tanks at the Arizona Clean Fuels refinery clearly is technically feasible, and more effective than the "floor" level of control identified by U.S. EPA in 1995, and given the statutory mandate to consider the maximum achievable degree of emission reduction, the

Department is unclear as to why U.S. EPA did not identify and consider this control option in the subpart CC rulemaking.

Similarly, the Department's determination regarding the control level representing BACT for VOC emissions from the Group "B" Storage Tanks is supported by the rulemaking procedure used by U.S. EPA in establishing the NESHAP emission standards for storage vessels at oil and natural gas production facilities. These standards were promulgated by U.S. EPA in 1999 for the purpose of meeting the same statutory mandate, are codified at 40 CFR 63 subpart HH, and include the same substantive provisions for storage tanks as subpart CC. In the case of the subpart HH rulemaking for storage tanks, U.S. EPA again established the NESHAP emission standard equal to the "floor" level of control; U.S. EPA did not perform an evaluation of costs and other impacts for any more stringent control options because no such options were identified. As the control equipment configuration proposed for the Group "B" Storage Tanks at the Arizona Clean Fuels refinery clearly is technically feasible, and more effective than the "floor" level of control identified by U.S. EPA in 1999, and given the statutory mandate to consider the maximum achievable degree of emission reduction, the Department is unclear as to why U.S. EPA did not identify and consider this control option in the subpart HH rulemaking.

Furthermore, as evidenced by another comment from U.S. EPA Region IX as discussed in Section X.E.5 herein, U.S. EPA since at least the late 1980's has been aware that at least one facility with crude oil storage tanks has actually employed the control equipment configuration proposed for the Group "B" Storage Tanks at the Arizona Clean Fuels refinery. The Department interprets this as an indication that some of the U.S. EPA resources currently directed at oversight of State preconstruction permitting programs might be better directed toward ensuring that its rulemaking efforts conform to the express statutory mandates authorizing those rulemaking efforts.

(4) Consideration of Enhanced Monitoring and Compliance Certification Requirements

As mentioned previously, in identifying the most appropriate format for the Group "B" Storage Tank VOC BACT emission limitations, one of the Department's considerations was the degree of difficulty for each alternative format with respect to implementing the statutory mandate for enhanced monitoring

and compliance certification under Clean Air Act §§ 114(a)(3) and 504(b).

Specifically, for the Tank Farm Thermal Oxidizer, the Department decided to express the VOC emission limitations as requirements to design the Tank Farm Thermal Oxidizer for a VOC destruction efficiency of at least 99.9 percent and to design, maintain, and operate the device such that it meets a specified minimum combustion chamber temperature of 1,600 ºF, based on a five-minute average, and a specified minimum residence time of 0.75 seconds. The Department made this decision, in part, because the format of these requirements allows for monitoring which provides data in units that can be correlated directly with the emission limitation and which can be used to provide a continuous indication of compliance. The Department considers this to be an important factor in selecting the format for BACT because Clean Air Act § 504(b) provides that U.S. EPA "may by rule prescribe procedures and methods for determining compliance and for monitoring and analysis of pollutants regulated under this Act, but continuous emissions monitoring need not be required if alternative methods are available that provide sufficiently reliable and timely information for determining compliance." Similarly, Clean Air Act § 114(a)(3) mandates that U.S. EPA require, for a major stationary source such as the proposed refinery, "enhanced monitoring and submission of compliance certifications. Compliance certifications shall include (A) identification of the applicable requirement that is the basis of the certification, (B) the method used for determining the compliance status of the source, (C) the compliance status, (D) whether compliance is continuous or intermittent, (E) such other facts as the Administrator may require."

These statutory provisions, as they would apply to the Tank Farm Thermal Oxidizer at the proposed refinery, are implemented primarily by the "Compliance Assurance Monitoring" regulations codified at 40 CFR part 64. These regulations, as discussed in Section IV.F herein, provide an exemption for applicable requirements for which the permit specifies a "continuous compliance determination method," which is defined at 40 CFR § 64.1 as "a method, specified by the applicable standard or an applicable permit condition, which: (1) Is used to determine compliance with an emission limitation or standard on a continuous basis, consistent with the averaging period established for the emission limitation or standard; and (2) Provides data either in units of the standard or correlated directly

with the compliance limit." Applicable requirements meeting this exemption criterion are those that provide both the Department and the source owner or operator with the greatest certainty as to whether compliance is continuous or intermittent, as required by Clean Air Act § 114(a)(3), and as to whether the monitoring provides sufficiently timely and reliable information for determining compliance, as required by Clean Air Act § 504(b).

By comparison, if the Department had instead chosen to express the Tank Farm Thermal Oxidizer VOC emission limitation representing BACT as an independently enforceable control efficiency requirement, as discussed in Section X.H.2.c(2) herein, the Department and the source would be subjected to continued and unavoidable uncertainty regarding whether compliance is continuous or intermittent, as required by Clean Air Act § 114(a)(3), and regarding whether the monitoring provides sufficiently timely and reliable information for determining compliance, as required by Clean Air Act § 504(b). This uncertainty would arise because a subjective determination would be required as to the sufficiency and representativeness of data produced by monitoring of combustion chamber temperature and exhaust gas volumetric flow rate as surrogates for control efficiency. In order to avoid this uncertainty, the Department could require the use of dual continuous emissions rate monitoring systems, one at the control device inlet and one at the outlet, but this requirement would greatly increase the cost of implementing this control option without any increase in enforceability relative to the proposed format for the VOC BACT emission limitations.

Similarly, if the Department had instead chosen to express the Tank Farm Thermal Oxidizer VOC emission limitation representing BACT as a "nominal control efficiency," as discussed in Section X.H.2.c(2) herein, the Department and the source would be subjected to continued and unavoidable uncertainty regarding whether compliance is continuous or intermittent, as required by Clean Air Act § 114(a)(3), and regarding whether the monitoring provides sufficiently timely and reliable information for determining compliance, as required by Clean Air Act § 504(b). This uncertainty would arise for two reasons. First, the Department considers the "nominal control efficiency" format to be inherently vague and unclear as to whether the control efficiency is actually an emission limitation, or whether the design standards and work practice requirements, with which the source owner or operator must actually

draft

demonstrate compliance, are the only applicable emission limitations. Second, assuming that the control efficiency is considered an emission limitation under this format, a subjective determination is required as to the sufficiency and representativeness of data produced by monitoring of combustion chamber temperature as a surrogate for control efficiency.

In promulgating the Compliance Assurance Monitoring regulations, U.S. EPA included an exemption for all NESHAP emission standards codified at 40 CFR part 63, including the subpart CC emission standards for thermal oxidizers used to control VOC emissions from storage tanks, as discussed in detail in Sections X.H.2.c(1) and X.H.2.c(2) herein. For the purposes of the nominal control efficiency requirement in subpart CC, this exemption in the Compliance Assurance Monitoring rule obviates the need for any subjective determination of the sufficiency and representativeness of data produced by monitoring of combustion chamber temperature as a surrogate for control efficiency. The basis for this exemption is U.S. EPA's determination that, because the NESHAP monitoring requirements have already been identified as sufficient, no further evaluation is necessary. However, notwithstanding any determination made by the Department using precisely this rationale, the exemption in the Compliance Assurance Monitoring rule would not apply to a BACT emission limitation imposed by the Department, expressed in the same terms as the NESHAP emission standard, and applicable to the same type of emission source and control device regulated by the NESHAP emission standard.

In summary, in instances such as this, when two or more alternative formats for a BACT emission limitation are identified, one of the differentiating factors that the Department may consider is the relative certainty and enforceability provided by the identified compliance demonstration methods for each format. If one format allows for monitoring that produces data in the same units as the emission limitation (*i.e.*, a "continuous compliance determination method" for the purposes of the Compliance Assurance Monitoring regulation), the Department considers that format preferable, if all other factors are equal.

(5) Flame Temperature

The Department specifically disagrees with the comment from U.S. EPA Region IX to the extent that it suggests that "flame

temperature" is preferable to combustion chamber temperature as an indicator of thermal oxidizer performance. The Department considers flame temperature to be a poor surrogate for VOC destruction efficiency, as the relationship between these two variables is complex and largely unpredictable. Moreover, the Department is not aware of any technology that would enable continuous monitoring of flame temperature.

The Department notes that its selection of combustion chamber temperature and exhaust gas volumetric flow rate as the primary parameters indicative of Tank Farm Thermal Oxidizer performance is consistent with the determinations made by U.S. EPA in establishing the NESHAP emission standards for petroleum refinery storage tanks in 40 CFR 63 subpart CC and in more recent NESHAP emission standards for similar sources, such as those for storage tanks at miscellaneous organic chemical manufacturing facilities, codified at 40 CFR 63 subpart FFFF and promulgated on November 10, 2003.

(6) Flow Rate and Residence Time

With regard to U.S. EPA's comments pertaining to flow rate and residence time, and for the reasons outlined in Section X.H.2.a(3) herein, the Department has made several presumptions for the purpose of preparing this response. Specifically, as to the Tank Farm Thermal Oxidizer, the Department presumes that U.S. EPA is suggesting that the permit must specify either a minimum residence time or a maximum exhaust gas volumetric flow rate; that the permit must require a design evaluation and recordkeeping to show the exhaust gas volumetric flow rate that corresponds to the minimum residence time; and that the permit rate monitoring and recordkeeping. The Department presumes that U.S. EPA is not suggesting that the permit must specify minimum must require exhaust gas flow or maximum flow rates for waste gas, auxiliary fuel, exhaust gas, or any other stream; or that the permit must require direct monitoring of residence time.

The Department is in general agreement with U.S. EPA Region IX that, in order to ensure that maximum achievable VOC emission reduction is being achieved continuously, specification and monitoring of both temperature and residence time (or flow rate) is necessary and appropriate. The Department also agrees that the compliance demonstration requirements established by U.S. EPA in 40 CFR 63 subpart CC, and various other NESHAP emission standards for organic HAP emission sources using

combustion devices for emission control, are not adequate to provide assurance of continuous compliance, in spite of the statutory mandate for such assurance. Accordingly, the Department has added to the draft permit provisions requiring that the Permittee establish a maximum exhaust gas volumetric flow rate for the Tank Farm Thermal Oxidizer and requiring that the Permittee monitor continuously to demonstrate compliance with these requirements. The Department strongly disagrees with the comment from U.S. EPA Region IX to the extent that it suggests that the permit, in order to satisfy any statutory or regulatory criteria, must include, in addition to those emission limitations and monitoring requirements included in the revised draft permit, any additional emission limitations or monitoring requirements for the Tank Farm Thermal Oxidizer.

d. The Draft Permit Conditions for the Wastewater Treatment Plant Thermal Oxidizer Represent BACT and Include Adequate Compliance Demonstration Procedures.

The Wastewater Treatment Plant (WWTP) Thermal Oxidizer at the proposed Arizona Clean Fuels refinery serves only to control VOC emissions from vents within the WWTP. As described below and in Section V.H.2 herein, the required use of the WWTP Thermal Oxidizer represents only a portion of the Department's preliminary BACT determination for VOC emissions from the WWTP. Therefore, any discussion of the adequacy of the BACT determination for VOC emissions from the WWTP Thermal Oxidizer necessarily represents a discussion of the adequacy of the BACT determination for the WWTP. The cited comment from U.S. EPA Region IX is addressed in this context.

For the WWTP Thermal Oxidizer, the draft permit conditions that were presented to U.S. EPA Region IX included a specified minimum residence time; a specified minimum thermal oxidizer combustion chamber temperature; requirements for preparing a design evaluation documenting that the specified minimum temperature and residence time will be achieved continuously; and requirements for monitoring and recordkeeping to demonstrate compliance with the specified minimum temperature. These preliminary draft permit conditions did not conform to the provisions suggested by the comment from U.S. EPA Region IX because they did not prescribe a minimum control efficiency; did not include any monitoring or recordkeeping relating to a prescribed control efficiency requirement; and do not prescribe "proper operating conditions," if the Department correctly interprets the comment to suggest that the permit must prescribe limitations on flow rate and flame temperature in order to be sufficient.

In response to this comment, the Department has revised the draft permit to include two substantive new requirements for the Wastewater Treatment Plant Thermal Oxidizer. First, the revised draft permit includes a specified minimum design VOC destruction efficiency of 99.9 percent representing BACT. Second, the revised draft permit includes a requirement for establishing a maximum thermal oxidizer exhaust gas volumetric flow rate, in addition to the existing requirement for a minimum temperature level. The maximum flow rate is to be established, using engineering calculations, at a level that corresponds to a minimum thermal oxidizer combustion chamber residence time of 0.75 seconds. The permit also has been revised to require continuous monitoring to demonstrate compliance with the exhaust gas volumetric flow rate limitation.

The Department strongly disagrees with any suggestion that the Department's BACT determination is inadequate, or that the draft permit conditions are not adequate to provide a continuous indication of the compliance status of the thermal oxidizer with respect to its VOC emission limitations.

(1) Design Standards and Work Practice Requirements as BACT.

For the reasons described in Section X.H.2.c(1) herein, the Department has determined that design standards and work practice requirements can be used to meet the statutory and regulatory provisions relating to BACT emission limitations.

(2) Comparison of BACT Emission Limitation Format with Format of NESHAP Emission Standards

The Department's preliminary BACT determination for VOC emissions from the WWTP Thermal Oxidizer, as discussed in Section V.H.2 herein, is represented by a requirement to design the control device for a VOC destruction efficiency of at least 99.9 percent and requirements to design, maintain, and operate the control device such that it meets a specified minimum combustion chamber temperature of 1,600 ºF, based on a five-minute average, and at a maximum exhaust gas flow rate that corresponds to a specified minimum residence time of 0.75 seconds.

The WWTP at the proposed Arizona Clean Fuels refinery is subject to the provisions of 40 CFR part 63, subpart CC, "National Emission Standards for Hazardous Air Pollutants from

Petroleum Refineries." Therefore, in addition to the BACT emission limitations described above, the WWTP is subject to the NESHAP emission standards in subpart CC. As discussed in Section X.H.2.d(3) herein, the Department has determined that the emission control level required by applicable organic HAP emission standards in subpart CC is not representative of BACT for VOC emissions from the WWTP at the proposed Arizona Clean Fuels refinery. The Department also has determined that the format selected by U.S. EPA for the applicable organic HAP emission standards in subpart CC is inappropriate for establishing BACT for VOC emissions from the WWTP. The basis for this determination is discussed in the following paragraphs.

The subpart CC NESHAP emission standards applicable to the WWTP Thermal Oxidizer allow the source to select any of several control options that are deemed by U.S. EPA to be equivalent for the purposes of controlling organic HAP emissions. For the purposes of this discussion, only one of these control options is relevant: the option to use a closed-vent system and a thermal oxidizer or some other end-of-pipe air pollution control device. If a closed-vent system and a thermal oxidizer are used to satisfy the NESHAP requirements, subpart CC includes design specifications and work practice requirements for the thermal oxidizer. The Department considers this approach to be appropriate, in general, both for NESHAP emission standards and for BACT emission limitations applicable to thermal oxidizers used to control emissions from wastewater treatment plants. In addition, because U.S. EPA has promulgated regulations implementing the statutory mandate for enhanced monitoring and compliance certification under Clean Air Act §§ 114(a)(3) and 504(b) to give special treatment to subpart CC and other NESHAP regulations, the Department considers the format of the subpart CC thermal oxidizer design specifications and work practice requirements to be reasonable and appropriate for that regulation. However, as discussed in detail in Section X.H.2.d(4) herein, the regulations promulgated by U.S. EPA for the purpose of implementing the statutory mandate for enhanced monitoring and compliance certification do not provide the same special treatment for BACT emission limitations established by the Department. For this reason and others, the Department has determined that a different format is more appropriate for the WWTP Thermal Oxidizer design specifications and work practice requirements.

The design specifications and work practice requirements in

subpart CC include a requirement that the thermal oxidizer "shall be designed and operated [to] meet one of the following conditions: (A) reduce the organic emissions vented to it by 95 weight percent or greater; (B) achieve a total organic compound concentration of 20 ppmv (as the sum of the concentrations for individual compounds using Method 18) on a dry basis corrected to 3 percent oxygen; or (C) provide a minimum residence time of 0.5 seconds at a minimum temperature of 760 ºC (1,400 ºF)." The last of these three compliance options includes only design standards and work practice requirements. The first two compliance options might appear to be numerical limits on emission rate, but the Department contends that they, too, are actually design specification and a work practice requirements, in light of the following additional provisions of subpart CC:

"An owner and operator shall demonstrate that each control device, except for a flare, achieves the appropriate conditions specified in [this section] by using one of the following methods:

"(i) Engineering calculations in accordance with requirements specified [elsewhere in] this subpart; or

"(ii) Performance tests conducted using the test methods and procedures that meet the requirements specified in [this section].

"An owner or operator using a closed-vent system and control device in accordance with [this regulation] shall maintain the following records. The documentation shall be retained for the life of the control device.

"(1) A statement signed and dated by the owner or operator certifying that the closed-vent system and control device is designed to operate at the documented performance level when the waste management unit vented to the control device is or would be operating at the highest load or capacity expected to occur.

"(2) If engineering calculations are used to determine control device performance in accordance with [this regulation], then a design analysis for the control device that includes for example:

"(i) Specifications, drawings, schematics, and piping and instrumentation diagrams prepared by the owner or operator, or the control device manufacturer or vendor that describe the control device design based on acceptable engineering texts. The design analysis shall address the following vent stream characteristics and control device operating parameters:

"(A) For a thermal vapor incinerator, the design analysis shall consider the vent stream composition, constituent concentrations, and flow rate.

The design analysis shall also establish the design minimum and average temperature in the combustion zone and the combustion zone residence time."

In other words, although the NESHAP regulation includes mention of a 95 percent control efficiency requirement, which the Department would normally consider to be a numerical limit on emission rate, compliance with this emission limitation can be demonstrated by preparing a design evaluation documenting that the thermal oxidizer will achieve a specified minimum residence time and a specified minimum temperature. In effect, then, the NESHAP emission standards are design specifications and work practice requirements; there is no independently enforceable, numerical limit on emission rate. The requirements actually imposed on a source owner or operator by these NESHAP emission standards are almost identical to those imposed by the draft permit conditions for the WWTP Thermal Oxidizer at the proposed Arizona Clean Fuels refinery, except that the draft permit conditions are more stringent.

As discussed in detail in Section X.H.2.c(1) herein, the statutory and regulatory provisions governing the Department's determination of BACT explicitly allow the use of design standards and work practice requirements. Of course, these statutory and regulatory provisions would also allow the use of a specified minimum control efficiency, or any number of other formats for the BACT emission limitation. In selecting the most appropriate format for permit conditions representing BACT for VOC emissions from the WWTP Thermal Oxidizer, the Department's intent was to develop permit conditions that would be practicably enforceable and would require the maximum degree of reduction in VOC emissions on a continuous basis. The Department considered several possible formats before selecting those that are included in the draft permit conditions.

The Department considered establishing an independently enforceable, specified minimum VOC control efficiency for the Wastewater Treatment Plant Thermal Oxidizer. The Department rejected this format for two reasons. First, expressing the BACT emission limitation as a control efficiency requirement to be achieved continuously creates difficulties in implementing the statutory mandate for enhanced monitoring and compliance certification under Clean Air Act §§ 114(a)(3) and 504(b). These difficulties are discussed in detail in Section X.H.2.d(4) herein. Second, the Department considers this format, by itself, to be inadequate for the purposes of requiring the maximum

degree of reduction in VOC emissions on a continuous basis. If this format were used, the minimum control efficiency would have to be established at a level that is continuously achievable, with an adequate compliance margin. Because high control efficiency levels are more readily achieved in a thermal oxidizer at higher inlet concentrations, the "worst-case" conditions for the purpose of determining the continuously achievable control efficiency level at the Wastewater Treatment Plant Thermal Oxidizer would be would be representative of those periods with maximum waste gas flow rate and minimum inlet VOC concentration. For the purposes of this discussion, the Department has assumed that the maximum, continuously achievable VOC control efficiency level for the Wastewater Treatment Plant Thermal Oxidizer is 98 percent and that, in order to ensure compliance with this requirement, the thermal oxidizer would have to be designed and operated to achieve a minimum residence time of 0.75 seconds and a minimum combustion chamber temperature of 1,600 °F. (These are the minimum residence time and the minimum temperature specified in the draft permit conditions. Although the Department has not conducted an exhaustive and quantitative analysis of the continuously achievable control efficiency level, the Department considers 98 percent to be a reasonable estimate; however, as shown by the following discussion, a quantitative determination of the continuously achievable control efficiency level is not material to the Department's decision.) Fundamental engineering principles dictate that, if a residence time of 0.75 seconds and a minimum temperature of 1,600 °F will achieve 98 percent control efficiency under the worst-case conditions described above, the same thermal oxidizer will achieve greater than 98 percent control efficiency under other conditions. For instance, during periods of relatively low waste gas flow rate, residence time will increase; if all other parameters are held constant, control efficiency also will increase. If BACT were expressed as a minimum 98 percent control efficiency, the source owner or operator could reduce auxiliary fuel input, with a corresponding reduction in combustion chamber temperature, and still comply with the emission limitation. The proposed permit condition would require that the minimum temperature of 1,600 °F be maintained, even when residence time is higher than 0.75 seconds, and would thus result in a control efficiency in excess of 98 percent. Based on this analysis, the Department concludes that an independently enforceable, minimum control efficiency format would not require the maximum degree of reduction in VOC emissions achievable on a continuous basis.

draft

The Department also considered using a "nominal" control efficiency requirement, consistent with the first compliance option provided by U.S. EPA in establishing the NESHAP emission standard for similar thermal oxidizers in 40 CFR 63 subpart CC, but rejected this format for two reasons. First, expressing the BACT emission limitation as a "nominal" control efficiency requirement creates difficulties in implementing the statutory mandate for enhanced monitoring and compliance certification under Clean Air Act §§ 114(a)(3) and 504(b). These difficulties are discussed in detail in Section X.H.2.d(4) herein. Second, the Department considers this format to be inadequate for the purposes of requiring the maximum degree of reduction in VOC emissions on a continuous basis. Using the design standards and work practice requirements in subpart CC to illustrate: Subpart CC allows compliance to be demonstrated by documenting that a minimum residence time of 0.5 seconds and a minimum temperature of 1,400 °F will be achieved. As an alternative to that demonstration, the source owner or operator can demonstrate compliance with a nominal 95 percent control efficiency requirement by preparing a design analysis, the primary engineering considerations in which will be the pollutant autoignition temperature, the minimum thermal oxidizer combustion chamber residence time, and the minimum thermal oxidizer combustion chamber temperature. Presumably, given the option to comply by achieving the specified parameters, the source owner or operator is going to elect to comply using the nominal control efficiency alternative only if it is cheaper and easier to meet; for example, if the design evaluation for this particular source shows that the nominal 95 percent control efficiency requirement can be met with 0.5 seconds residence time and 1,300 °F minimum temperature. Clearly, though, in establishing the subpart CC emission standards, U.S. EPA determined that a minimum residence time of 0.5 seconds and a minimum temperature of 1,400 °F are achievable and technically feasible. Fundamental engineering principles dictate that a greater VOC destruction efficiency will be achieved at 1,400 °F than at 1,300 °F. No analysis of economic impacts or other considerations is required in order for the source owner or operator to elect the less effective, 1,300 °F minimum temperature compliance option. Based on this analysis, the Department concludes that the "nominal control efficiency" format used by U.S. EPA in establishing the NESHAP emission standards does not require the maximum degree of reduction in VOC emissions achievable on a continuous basis.

Ultimately, in response to the comment from U.S. EPA Region

IX regarding the preliminary draft permit conditions, the Department elected to add to the permit a requirement for a VOC destruction efficiency design level of at least 99.9 percent. The format of this requirement differs from the "nominal" control efficiency format used by U.S. EPA in the NESHAP in that the draft permit term uses the word "designed" rather than the phrase "designed and operated." As noted previously, the intent and effect of these phrases is the same, but the phrasing used by the Department will not create difficulties in implementing the statutory mandate for enhanced monitoring and compliance certification under Clean Air Act §§ 114(a)(3) and 504(b), as discussed in detail in Section X.H.2.c(4) herein.

(3) Comparison of BACT Control Level with NESHAP Control Level

The Department's preliminary BACT determination for VOC emissions from the WWTP Thermal Oxidizer, as discussed in Section V.H.2 herein, is represented by a requirement to design the control device for a VOC destruction efficiency of at least 99.9 percent and requirements to design, maintain, and operate the control device such that it meets a specified minimum combustion chamber temperature of 1,600 ºF, based on a five-minute average, and at a maximum exhaust gas flow rate that corresponds to a specified minimum residence time of 0.75 seconds. The Department estimates that the emission limitations relating to the use of a thermal oxidizer will reduce long-term average VOC emissions by 99 percent.

The Department is not aware of any data indicating that more stringent levels of VOC control have been achieved or have been demonstrated to be achievable for petroleum refinery wastewater treatment plants. The comment from U.S. EPA Region IX neither provides nor hints at the existence of any such data.

In addition to being subject to these BACT requirements, the WWTP is subject to the NESHAP emission standards in 40 CFR part 63, subpart CC. The NESHAP emission standards allow the source to select any of several compliance options that are deemed by U.S. EPA to be equivalent for the purposes of controlling organic HAP emissions. One of the compliance options is a requirement to design, maintain, and operate the WWTP Thermal Oxidizer such that it meets a specified minimum combustion chamber temperature of 1,400 ºF, based on a three-hour average, and a specified minimum residence time of 0.5 seconds.

The Department's determination regarding the control level representing BACT for VOC emissions from the WWTP is supported by the rulemaking procedure used by U.S. EPA in establishing the NESHAP emission standards for petroleum refinery wastewater treatment plants. The subpart CC emission standards for wastewater treatment plants at new sources were promulgated by U.S. EPA in 1995 for the purpose of meeting the statutory mandate at Clean Air Act § 112(d). As described in detail in Section X.H.2.a(1) herein, the subpart CC rulemaking manifests two determinations that U.S. EPA made in 1995 with regard to organic HAP emissions from wastewater treatment plants at petroleum refineries. First, no source had achieved a more stringent level of control than what is reflected in the subpart CC provisions. Second, U.S. EPA determined, after considering costs and other impacts, that no more stringent level of control was achievable. In the case of the subpart CC rulemaking for wastewater treatment plants, U.S. EPA established the NESHAP emission standard equal to the "floor" level of control; U.S. EPA did not perform an evaluation of costs and other impacts for any more stringent control options because no such options were identified.

Similarly, the Department's determination regarding the control level representing BACT for VOC emissions from the WWTP at the proposed Arizona Clean Fuels refinery is supported by the rulemaking procedure used by U.S. EPA in establishing the NESHAP emission standards for wastewater treatment plants at miscellaneous organic chemical manufacturing facilities, codified at 40 CFR 63 subpart FFFF and promulgated on November 10, 2003. These emission standards were promulgated for the purpose of meeting the same statutory mandate and include the same substantive provisions for wastewater treatment plants as subpart CC.

(4) Consideration of Enhanced Monitoring and Compliance Certification Requirements

The Department's considerations with regard to implementation of the statutory mandate for enhanced monitoring and compliance certification under Clean Air Act §§ 114(a)(3) and 504(b), and the effect of those considerations on selection of a format for the VOC BACT emission limitations for the WWTP Thermal Oxidizer at the proposed Arizona Clean Fuels refinery, are as discussed in Section X.H.2.c(4) herein.

(5) Flame Temperature

The Department specifically disagrees with the comment from U.S. EPA Region IX to the extent that it suggests that "flame temperature" is preferable to combustion chamber temperature as an indicator of thermal oxidizer performance. The Department considers flame temperature to be a poor surrogate for VOC destruction efficiency, as the relationship between these two variables is complex and largely unpredictable. Moreover, the Department is not aware of any technology that would enable continuous monitoring of flame temperature.

The Department notes that its selection of combustion chamber temperature and exhaust gas volumetric flow rate as the primary parameters indicative of WWTP Thermal Oxidizer performance is consistent with the determinations made by U.S. EPA in establishing the NESHAP emission standards for petroleum refinery wastewater treatment plants in 40 CFR 63 subpart CC and in more recent NESHAP emission standards for similar sources, such as those for wastewater treatment plants at miscellaneous organic chemical manufacturing facilities, codified at 40 CFR 63 subpart FFFF and promulgated on November 10, 2003.

(6) Flow Rate and Residence Time

With regard to U.S. EPA's comments pertaining to flow rate and residence time, and for the reasons outlined in Section X.H.2.a(3) herein, the Department has made several presumptions for the purpose of preparing this response. Specifically, as to the WWTP Thermal Oxidizer, the Department presumes that U.S. EPA <u>is</u> suggesting that the permit must specify a minimum residence time; that the permit must require a design evaluation and recordkeeping to show the exhaust flow rate that corresponds to the minimum residence time; and that the permit must require exhaust gas flow rate monitoring and recordkeeping. The Department presumes that U.S. EPA <u>is not</u> suggesting that the permit must specify minimum or maximum flow rates for waste gas, auxiliary fuel, exhaust gas, or any other stream; or that the permit must require direct monitoring of residence time.

The Department is in general agreement with U.S. EPA Region IX that, in order to ensure that maximum achievable VOC emission reduction is being achieved continuously, specification and monitoring of both temperature and residence time (or flow

rate) is necessary and appropriate. The Department also agrees that the compliance demonstration requirements established by U.S. EPA in 40 CFR 63 subpart CC, and various other NESHAP emission standards for organic HAP emission sources using combustion devices for emission control, are not adequate to provide assurance of continuous compliance, in spite of the statutory mandate for such assurance. Accordingly, the Department has added to the draft permit provisions requiring that the Permittee establish a maximum exhaust gas volumetric flow rate for the Wastewater Treatment Plant Thermal Oxidizer and requiring that the Permittee monitor continuously to demonstrate compliance with these requirements. The Department strongly disagrees with the comment from U.S. EPA Region IX to the extent that it suggests that the permit, in order to satisfy any statutory or regulatory criteria, must include, in addition to those emission limitations and monitoring requirements included in the revised draft permit, any additional emission limitations or monitoring requirements for the Wastewater Treatment Plant Thermal Oxidizer.

3. U.S. EPA's comment: *I wanted to pass along a couple thermal oxidizer BACT determinations.*

Department's response: The Department notes that this comment and the accompanying information originated as the result of a conference call involving U.S. EPA Region IX staff and Department staff. U.S. EPA staff inquired as to why the proposed permit terms representing BACT for VOC emissions from the thermal oxidizers at the proposed refinery were less stringent than the permit terms for other similar facilities. The Department indicated that it had no information indicating that any similar facilities are subject to more stringent permit terms. At the Department's request, U.S. EPA provided the information that is presented in the following subsections. No response to U.S. EPA's introductory comment is warranted.

a. U.S. EPA's comment: *Atofina Chemical (RBLC ID TX-0354): 99.9% control efficiency and 1,800 ºF.*

Department's response: As discussed in detail in Section X.A.1.e herein, when evaluating BACT for a particular emission unit, the Department considers emission limits that have been imposed on similar emission units at stationary sources in other States only to the extent that they may be informative as to (1) the technical feasibility of certain control options, (2) the degree of emission reduction achievable, and (3) the relative weights that other permitting authorities are assigning to the various factors required to be considered under the statutory BACT provision. The information provided in this comment from U.S. EPA

Region IX is addressed by the Department in this context.

The cited clearinghouse entry for Atofina Chemicals pertains to a LAER (not BACT) determination made by the Texas Commission on Environmental Quality in 2002. This LAER determination is memorialized in Permit No. PSD-TX-1016, which was most recently amended in March 2003. The LAER determination does not pertain to a petroleum refinery; the subject facility manufactures synthetic organic chemicals such as acrolein, dimethyl sulfide, dimethyl disulfide, hydrogen sulfide, methyl mercaptan, ethyl mercaptan, and methylmercaptopropionaldehyde. This facility is projected to commence operation in 2005.

The thermal oxidizer referenced in this comment from U.S. EPA Region IX will be used to control VOC and organic HAP emissions from emission sources such as process vents, storage tanks, and rail car loading operations. However, in addition to serving as an air pollution control device for VOC-containing gas streams, this thermal oxidizer also will serve as an incinerator for disposal of liquid waste streams from the synthetic organic chemical manufacturing facility. This incinerator is not comparable to the air pollution control devices proposed for use at the Arizona Clean Fuels refinery. The Department does not consider a liquid waste incinerator to be a viable control alternative for inclusion in the VOC BACT analysis for the sulfur recovery plant, wastewater treatment plant, storage tanks, loading operations, or process vents at the proposed Arizona Clean Fuels refinery. The significant difference between a liquid waste incinerator and a thermal oxidizer used solely for control of VOC-containing gas streams is evident from the Texas permit cited by U.S. EPA Region IX. This permit includes, in addition to the liquid waste incinerator previously described, a separate thermal incinerator used solely to combust VOC-containing gas streams from the same facility. The VOC LAER determination for this thermal incinerator requires a minimum firebox temperature of 1,600 ºF, rather than 1,800 ºF as is required for the liquid waste incinerator.

The Texas LAER determination for the liquid waste incinerator cited by U.S. EPA Region IX is not at all informative as to items (1) or (2) above, both because the subject facility has not yet started up and because it is not similar or comparable to the proposed Arizona Clean Fuels refinery. The LAER determination is not informative as to item (3) because it was not made under a control technology review requirement that implements the statutory BACT requirement at Clean Air Act § 169(3). The LAER determination for the waste gas thermal incinerator is somewhat informative as to items (1) and (2), to the extent that it supports the Department's conclusion regarding BACT.

b. U.S. EPA's comment: *Fuji Kikai Kogyo Company, Ltd. (SCAQMD ID 06-320-001B): 99% control efficiency; 1,500 ºF; and 1.5 to 2.5 seconds residence time.*

Department's response: As discussed in detail in Section X.A.1.e herein, when evaluating BACT for a particular emission unit, the Department considers emission limits that have been imposed on similar emission units at stationary sources in other States only to the extent that they may be informative as to (1) the technical feasibility of certain control options, (2) the degree of emission reduction achievable, and (3) the relative weights that other permitting authorities are assigning to the various factors required to be considered under the statutory BACT provision. The information provided in this comment from U.S. EPA Region IX is addressed by the Department in this context.

The cited database entry is found on the Internet web site of the South Coast Air Quality Management District in California. This database entry pertains to Permit No. 06-320-001B, which was issued in 1999 by the Pennsylvania Department of Environmental Protection. The permit was issued to Chiyoda America, Inc., for a rotogravure printing operation used in manufacturing laminate countertops and similar products. (Fuji is the manufacturer of the printing equipment.)

The information provided by U.S. EPA Region IX with regard to the Chiyoda permit appears to be somewhat misleading. First, the permit does not include either a BACT or LAER determination; instead, it includes terms that restrict the facility's potential to emit VOC to less than the applicable major source threshold of 50 tons per year. Second, neither the cited efficiency level of 99 percent or the cited residence time of 1.5 to 2.5 seconds are listed as limits in the permit. The actual permit limits that are listed in the South Coast Air Quality Management District database entry are as follows. "1) Facility's VOC emissions shall not exceed 1000 lbs/day and/or 49 tons during any consecutive 12-month period; 2) Combustion temperatures of thermal oxidizers shall be maintained at a minimum of 1500 degree F (a surrogate measurement for 99% destruction efficiency); 3) Enclosure shall be maintained to ensure 100% capture efficiency." To the extent that they are comparable, the proposed VOC BACT emission limitations for the thermal oxidizers at the Arizona Clean Fuels refinery appear to the Department to be more stringent than the emission limitations for the Chiyoda facility in Pennsylvania.

The Chiyoda permit limits are somewhat informative as to items (1) and (2) above, to the extent that they support the Department's conclusions regarding BACT for VOC emissions from the thermal oxidizers at the proposed Arizona Clean Fuels refinery. However, the value of the

Chiyoda permit is limited, because the facility is not similar or comparable to the proposed Arizona Clean Fuels refinery. The Chiyoda permit is not informative as to item (3) because it was not made under a control technology review requirement that implements the statutory BACT requirement at Clean Air Act § 169(3).

c. U.S. EPA's comment: *Envent Corporation (SCAQMD ID 384630): 99.9% control efficiency and 1,400 ºF.*

Department's response: As discussed in detail in Section X.A.1.e herein, when evaluating BACT for a particular emission unit, the Department considers emission limits that have been imposed on similar emission units at stationary sources in other States only to the extent that they may be informative as to (1) the technical feasibility of certain control options, (2) the degree of emission reduction achievable, and (3) the relative weights that other permitting authorities are assigning to the various factors required to be considered under the statutory BACT provision. The information provided in this comment from U.S. EPA Region IX is addressed by the Department in this context.

The cited database entry is found on the Internet web site of the South Coast Air Quality Management District in California. This database entry pertains to Permit No. F39976, issued in 1999 by the South Coast agency. The permit was amended in March 2003 to reflect a change in the name of the permittee/equipment manufacturer. The permit covers a portable tank degassing system.

The information provided by U.S. EPA Region IX with regard to the Envent permit appears to be somewhat misleading, because the cited efficiency level of 99.9 percent is not an enforceable requirement in the permit. The actual permit limits that are listed in the South Coast Air Quality Management District database entry are as follows. "Restricted to degassing of tanks containing non-chlorinated petroleum hydrocarbon vapors, with exception of trace (<0.1 ppm) chlorinated hydrocarbons. VOC at outlet not to exceed 50 ppmv as hexane (measured hourly). Temperature at outlet of oxidizer to be at least 1400F in thermal mode, 600F in catalytic mode. Benzene at outlet not to exceed (ppmv limits based on distance, in meters, to nearest receptor): 25<50 .03, 50<75 .06, 75<100 0.11, 100<150 0.18, 150<200 0.28, 200<500 0.65, 500 or more 3.4. Minimum degassing time = 2.3 x V/Q, where V=tank volume and Q= volumetric suction rate (Rule 1149)."

The South Coast agency describes the basis for the VOC emission limit as follows: "The VOC concentration limit is consistent with 5000 ppm max. vapor concentration in the tank and 99.9% destruction efficiency, with a factor of 10 margin. The 99.9% destruction efficiency was based

on AQMD's knowledge of similer oxidizers used in soil vapor recovery systems." To the extent that they are comparable, the proposed VOC BACT emission limitations for the thermal oxidizers at the Arizona Clean Fuels refinery appear to the Department to be more stringent than the emission limitations for the Envent facility in California.

The Envent permit limits are somewhat informative as to items (1) and (2) above, to the extent that they support the Department's conclusions regarding BACT for VOC emissions from the thermal oxidizers at the proposed Arizona Clean Fuels refinery. However, the value of the Envent permit is limited, because the facility is not similar or comparable to the proposed Arizona Clean Fuels refinery. The Envent permit is not informative as to item (3) because it was not made under a control technology review requirement that implements the statutory BACT requirement at Clean Air Act § 169(3). Instead, because the facility is located in an area that is designated nonattainment for ozone, the applicable regulatory provision requiring a control technology review implements the statutory"LAER" provision under Clean Air Act § 171(3).

4. U.S. EPA's comment: *We consider BACT for thermal oxidizers to be an overall VOC destruction efficiency of 99.9%, and the permit for Arizona Clean Fuels must include this destruction efficiency requirement along with a requirement for periodic source tests.*

Department's response: The Department notes that the Clean Air Act, as well as Arizona and Federal implementing regulations, expressly leave to the State, acting as the permitting authority, the responsibility to determine the emission limitation that represents the maximum achievable reduction in air pollutant emissions.

The Department recognizes that U.S. EPA Region IX, in cases where it acts as the permitting authority for PSD permitting actions, as on Indian Lands in Arizona, it has the responsibility to make this determination. In those permitting actions, U.S. EPA Region IX may, as a matter of policy, elect to set BACT at levels that have not been demonstrated to be achievable continuously. The Department also recognizes that U.S. EPA has oversight authority for the Department's implementation of the PSD program. This oversight authority is expressly provided by §§ 113(a)(5) and 167 of the Clean Air Act and was recently upheld by the U.S. Supreme Court in *Alaska Department of Environmental Conservation v. Environmental Protection Agency et al*. However, this oversight authority does not extend to imposition of prescriptive policies regarding the setting of BACT emission limitations. Instead, U.S. EPA's oversight authority is limited to ensuring that the Department's BACT determinations conform to the two core criteria identified by U.S. EPA for making BACT determinations consistent with the statutory requirements. These

core criteria are (1) consideration of the most stringent control technologies available, and (2) a reasoned justification, considering "energy, environmental and economic impacts and other costs," of any decision to require less than the "maximum degree of reduction" in emissions. The Department's proposed BACT determinations, including its proposed BACT determinations for VOC emissions from the five thermal oxidizers at the proposed refinery, conform to these core criteria. The emission limit that U.S. EPA Region IX considers representative of BACT is not material to the Department's BACT determination.

5. U.S. EPA's comment: *We consider BACT to be an overall destruction efficiency of 99.9%, and we expect this efficiency to be included in Arizona Clean Fuels's permit.*

Department's response: See the Department's response in Section X.H.4 herein.

6. U.S. EPA's comment: *Continuous compliance with a destruction efficiency requirement must be demonstrated by appropriate operating parameters for temperature and residence time, and these values must be correlated to the desired destruction efficiency via a performance test.*

Department's response: The Department strongly disagrees with any suggestion that the Department's BACT determination is inadequate, or that the draft permit conditions are not adequate to provide a continuous indication of the compliance status of each thermal oxidizer with respect to its VOC emission limitations.

For the purposes of preparing this response, the Department has adopted the presumption that this comment from U.S. EPA Region IX, when it refers to a "destruction efficiency requirement," is referring to an independently enforceable requirement for achieving a minimum destruction efficiency level on a continuous basis. For several reasons that are discussed in detail in Section X.H.2 herein, the Department elected not to use this format for the VOC BACT emission limitations for the Loading Rack Thermal Oxidizers, the Tank Farm Thermal Oxidizer, or the Wastewater Treatment Plant Thermal Oxidizers. The Department strongly disagrees with the assertion that, if the Department had elected to use this format for the VOC BACT emission limitations for these thermal oxidizers, performance testing and surrogate parameter monitoring would be appropriate or sufficient for demonstrating continuous compliance.

7. U.S. EPA's comment: *We consider BACT to be an overall destruction efficiency of 99.9%, and we expect this efficiency to be included in Arizona Clean Fuels's permit. To assure compliance with this BACT limit, we consider requirements for a minimum temperature and residence time, along with continuous monitoring, to be necessary. The values for proper operating parameters must initially be based on a complete engineering evaluation of the most difficult to destruct feed-stream anticipated at Arizona Clean Fuels, verified by an initial*

draft

performance test, and consequently adjusted to maintain compliance with the permit limit as dictated by periodic source tests.

Department's response: See the Department's response in Sections X.H.2 through X.H.6 herein.

I. Sulfur Recovery Plant Thermal Oxidizer

U.S. EPA's comment: *VOC control efficiency of 98% but no certification or testing.*

Department's response: Section XIV.E.2 of Appendix "B" to the draft permit includes requirements for the conduct of performance testing to demonstrate initial compliance with the VOC BACT emission limitations affecting the sulfur recovery plant thermal oxidizer.

The Department is unclear as to the meaning of the term "certification" in this comment from U.S. EPA Region IX. Requirements relating to compliance certifications and certifications of truth, accuracy, and completeness.

J. Tank Farm Thermal Oxidizer

U.S. EPA's comment: *The draft permit requires destruction efficiency of 95%; higher efficiencies have been observed in practice.*

Department's response: The cited 95 percent control efficiency requirement is an applicable requirement for the Group "B" Storage Tanks pursuant to 40 CFR 63, subpart CC, "National Emission Standards for Hazardous Air Pollutants from Petroleum Refineries." The Department is required to include this applicable requirement in the permit pursuant to A.A.C. R18-2-306(A)(2).

As this comment was made in the context of U.S. EPA's review of the Department's preliminary BACT determinations for the proposed Arizona Clean Fuels refinery, it appears that the U.S. EPA Region IX commenter likely has mistakenly interpreted this draft permit condition as representative of the Department's preliminary BACT determination for VOC emissions from the Group "B" Storage Tanks. As described in detail in Section X.H.2.c herein, the Department's preliminary BACT determination for these storage tanks is much more stringent than the cited NESHAP emission standard.

K. Wastewater Treatment Plant Thermal Oxidizer

U.S. EPA's comment: *The draft permit requires destruction efficiency of 95%; higher efficiencies have been observed in practice.*

Department's response: The cited 95 percent control efficiency requirement is an applicable requirement for the Group "B" Storage Tanks pursuant to 40 CFR 63, subpart CC, "National Emission Standards for Hazardous Air Pollutants from Petroleum

draft

Refineries." The Department is required to include this applicable requirement in the permit pursuant to A.A.C. R18-2-306(A)(2).

As this comment was made in the context of U.S. EPA's review of the Department's preliminary BACT determinations for the proposed Arizona Clean Fuels refinery, it appears that the U.S. EPA Region IX commenter likely has mistakenly interpreted this draft permit condition as representative of the Department's preliminary BACT determination for VOC emissions from the Group "B" Storage Tanks. As described in detail in Section X.H.2.c herein, the Department's preliminary BACT determination for these storage tanks is much more stringent than the cited NESHAP emission standard.

L. Sulfur Recovery Plant

1. U.S. EPA's comment: *Alternative processes for sulfur recovery should be reviewed more rigorously.*

Department's response: The Department notes that this comment was conveyed verbally by a staff member at U.S. EPA Region IX during a conference call with Department personnel.

In response to this comment, the Department conducted additional review of alternative processes for sulfur removal and recovery at petroleum refineries. Section V.C.1 of this Technical Support Document has been revised to reflect this additional review. The preliminary draft copy of the Technical Support Document that was provided to U.S. EPA Region IX for their review included the following language in Section V.C.1.a.

"The control strategy proposed by the applicant is the use of parallel, three-stage Claus sulfur recovery units with a tail gas treatment unit (TGTU) and a thermal oxidizer. This is the combination of control technologies used by most petroleum refineries. Other identified control technologies include process modifications such as SuperClaus®, MCRC®, and Clinsulf®, which are proprietary adaptations of the Claus technology; Selectox, which is another proprietary technology that is similar to the Claus process; and SulFerox, which is a sulfur removal technology that uses a concentrated iron solution rather than amine absorption. In addition, a thermal oxidizer followed by a caustic wet scrubber is a potential alternative to the TGTU and thermal oxidizer. For the purposes of this BACT analysis, these control alternatives are considered equivalent in terms of the achievable SO_2 emission reduction."

2. U.S. EPA's comment: *Discussion of add-on control for SO_2 from oxidizer discussed in application but not TSD.*

Department's response: This comment from U.S. EPA Region IX is incorrect. As indicated above, Section VI.C.1 of the preliminary draft copy of the Technical Support Document included the statement, "a thermal oxidizer followed by a

caustic wet scrubber is a potential alternative to the TGTU and thermal oxidizer." This alternative control option was not evaluated in great detail because it is not more effective than the control option proposed by the applicant.

M. Sour Water Stripper

1. U.S. EPA's comment: *The proposed control method for the sour water tank is an internal floating roof tank. The TSD says that Subpart Kb internal floating roof storage vessel design and operation specifications were deemed representative of BACT but it does not discuss how that conclusion was reached or other potential control alternatives. The EPA Clearinghouse contains an entry where the tank emissions are collected and vented to a control device with a 98 percent control efficiency. The CARB Clearinghouse contains an entry where vapors from a tank are vented to a venturi scrubber with a 99.9 percent removal efficiency and a 13 ppmv limit. In addition, the CARB entry says that the tank had extremely high levels of H_2S offgasing (approximately 15,000 ppm and 100 lb/hr). The Arizona Clean Fuels tank is about three times bigger so emissions could potentially be high as well. The Department should re-evaluate the BACT determination and revise the TSD a more complete discussion of the emissions from the sour water tank, the possible options for control, and a justification for the selected control option.*

Department's response: The Department agrees with this comment and recognizes that the BACT analysis and preliminary BACT determination presented in the preliminary draft Technical Support Document did not identify or fully evaluate the most effective options for controlling H_2S emissions from the Sour Water Tank. In response to this comment from U.S. EPA Region IX, the Department identified carbon adsorption and wet scrubbing as available control options. The Department brought these control options to the attention of the Permittee, and the Permittee agreed to propose carbon adsorption as BACT for H_2S emissions from the Sour Water Tank. The proposed permit and this Technical Support Document have been revised accordingly.

2. U.S. EPA's comment: *H_2S and NH_3 that is removed from the feed water is routed to the sulfur recovery plant, which is ok. However, stripped water is routed to the wastewater treatment plant and the permit does not contain any removal efficiency requirements for the stripper. Without such requirements, poor stripper efficiency or operation could allow downstream releases of H_2S. The Bay Area BACT guideline requires that sour water strippers remove at least 95 percent of the H_2S from the process water stream. The permit should include a similar efficiency requirement and testing to verify that it is being achieved.*

Department's response: To the extent that this comment from U.S. EPA Region IX suggests that the proposed permit is deficient because it does not include an efficiency requirement for the Sour Water Stripper, the Department strongly disagrees. The Sour Water Stripper is designed to operate with no emissions to

the atmosphere; thus, it is not an emission unit as that term is defined at A.A.C. R18-2-101(38).

The two process streams exiting the Sour Water Stripper are acid gas, which is routed to the Sulfur Recovery Plant, and stripped water, which is routed to the Wastewater Treatment Plant. The Sour Water Stripper is designed to remove essentially all H_2S from the sour water and route the H_2S to the Sulfur Recovery Plant. However, no stripping device can be 100 percent effective and, as is correctly noted in this comment from U.S. EPA, any H_2S that is not removed from sour water is routed to the Wastewater Treatment Plant.

The Sour Water Stripper is a necessary part of the proposed refinery's process and, as noted above, is not an emission unit. Rather than impose an efficiency requirement on this process unit, the Department has elected to regulate sulfur compound emissions by imposing emission limits on the emission units from which the sulfur compounds will actually be emitted. These emission units are the Sulfur Recovery Plant Thermal Oxidizer and the Wastewater Treatment Plant Thermal Oxidizer. The approach taken by the Department is more direct, much more stringent, and much more enforceable than the approach suggested by U.S. EPA.

The permit application for the proposed Arizona Clean Fuels refinery indicates that the sulfur feed to the Sour Water Stripper is 53 long tons per day, or approximately 22,000 tons per year. At the proposed refinery, most of the SO_2 emissions attributable to the processing of sour water will be emitted to the atmosphere from the Sulfur Recovery Plant Thermal Oxidizer, with a lesser amount emitted from the Wastewater Treatment Plant Thermal Oxidizer. Because the Wastewater Treatment Plant vessels are required to be equipped with closed vent systems routed to the Wastewater Treatment Plant Thermal Oxidizer, no H_2S emissions from elsewhere in the Wastewater Treatment Plant are expected.

Based on a Wastewater Treatment Plant Thermal Oxidizer design maximum heat input of 0.334 MMBtu/hr and a maximum allowable sulfur concentration of 35 ppmv in the RFG combusted in this device, the SO_2 emissions from the Wastewater Treatment Plant Thermal Oxidizer are effectively limited to less than 0.01 tons per year. This represents less than 0.00005 percent of the sulfur in process water at the proposed refinery. Similarly, the SO_2 and H_2S BACT emission limits for the Sulfur Recovery Plant Thermal Oxidizer are based on a minimum 99.97 percent recovery efficiency. The maximum allowable sulfur emissions to the atmosphere from this control device represent only 0.03 percent of the sulfur in process water at the proposed refinery, or approximately 13 tons per year (as SO_2).

For the purpose of preparing this response, the Department has presumed that the Bay Area AQMD regulation referenced by the comment from U.S. EPA Region

IX is Rule 9-1-313.2. This rule requires that 95 percent of the H_2S in process water be removed and recovered. The Bay Area AQMD rule, if applied to the proposed refinery, would allow sulfur emissions of approximately 2,200 tons per year (as SO_2) attributable to the processing of sour water. This is approximately 170 times more than the proposed permit would allow, and more than eight times the maximum SO_2 emission rate for the proposed refinery in its entirety.

In addition, the Department's approach provides for continuous monitoring to ensure compliance with the limits on emissions of sulfur compounds from the Sulfur Recovery Plant Thermal Oxidizer and the Wastewater Treatment Plant Thermal Oxidizer. Bay Area AQMD Rule 9-1-313.2, in contrast, does not include any specific monitoring or testing requirements. The Department's review of Bay Area AQMD permits for petroleum refineries subject to this rule indicates that compliance typically is required to be demonstrated by annual performance testing. This provides for much less enforceability than the Department's approach, as annual performance testing provides data only for a "snapshot in time" of a few hours per year.

N. Internal Combustion Engines

1. U.S. EPA's comment: *The draft permit requires diesel sulfur content of 0.05% or less. Since ultra low sulfur diesel fuel will be produced onsite and will be readily available, it should be used instead. U.S. EPA recommends that the permit be revised to require the use of diesel fuel with a maximum sulfur content of 15 ppm.*

Department's response: The Department agrees with this comment from U.S. EPA Region IX. The draft permit has been changed accordingly.

2. U.S. EPA's comment: *The NO_X emission limit in the draft permit is 0.013 lb/bhp·hr. This is lower than standards for other internal combustion engines in the CARB Clearinghouse.*

Department's response: The observation is noted. As discussed in detail in Section X.A.1.e herein, when evaluating BACT for a particular emission unit, the Department considers emission limits that have been imposed on similar emission units at stationary sources in other States only to the extent that they may be informative as to (1) the technical feasibility of certain control options, (2) the degree of emission reduction achievable, and (3) the relative weights that other permitting authorities are assigning to the various factors required to be considered under the statutory BACT provision. The fact that a database maintained by the California Air Resources Board indicates that other agencies have made less stringent control technology determinations in the past is of no value to the Department in making its preliminary NO_X BACT determination for the internal combustion engines at the proposed refinery.

The Department also notes that the NO_X emission limit of 0.013 lb/bhp-hr cited by U.S. EPA Region IX represents the emission limit that was included in the preliminary draft permit provided by the Department in October 2003. This value was based upon the data provided in Table 3.4-1 of U.S. EPA's AP-42 emission factor compilation. The Department's preliminary BACT determination has since been revised to be more stringent, consistent with the emission standards for model year 2006 and later compression-ignition, non-road engines as codified at 40 CFR § 89.112. For the emergency generator engine, with a rated power output in excess of 560 kilowatts, the relevant emission standards are known as the "Tier 2" standards and include a limit of 6.4 grams of combined NO_X plus nonmethane hydrocarbons per kilowatt-hour of output. For the emergency fire water pump engines, each with a rated power output between 130 and 560 kilowatts, the relevant emission standards are known as the "Tier 3" standards and include a limit of 4.0 grams of combined NO_X plus nonmethane hydrocarbons per kilowatt-hour of output. These emission standards are lower than the cited NO_X emission limit of 0.013 lb/bhp-hr by 50 percent and 20 percent, respectively.

3. U.S. EPA's comment: *Revise basis for selection of NO_X control method in TSD.*

Department's response: The comment from U.S. EPA Region IX is unclear. In the preliminary draft Technical Support Document that was provided to U.S. EPA Region IX by the Department in October 2003, the NO_X control option that was cited as the basis for the preliminary NO_X BACT determination was "combustion controls." This term accurately reflected the basis for the Department's preliminary BACT determination.

As mentioned in Section X.M.1 herein, the Department's preliminary NO_X BACT determination has since been revised to reflect a more stringent emission limit, but the term "combustion controls" still accurately reflects the basis for this determination. As described in detail in Section V.M.2 herein, the Department anticipates that the commercially available, compression-ignition engines certified to meet the non-road engine emission standards will utilize a combination of control technologies including electronically-controlled fuel injection rate systems for fuel injection shaping, multiple fuel injections, and injection timing retard; charge air cooling; and exhaust gas recirculation.

4. U.S. EPA's comment: *The NO_X standard and the specific means used to achieve it should be listed in permit table as control measures.*

Department's response: The Department interprets this comment to refer to the summary table in Section XXVIII.A of the draft permit.

The Department disagrees with the comment from U.S. EPA Region IX to the extent that it suggests that the proposed permit terms for the internal combustion engines are deficient. Attachment "B" of the draft permit includes 29 sections,

with each section generally dedicated to a particular process unit or other equipment at the proposed refinery. Each section includes a summary table that lists and describes the emission units covered by that section and provides a brief description of the air pollution control devices or other control measures applied to those emission units. None of these summary tables, including the table in Section XXVIII.A of the draft permit, includes any quantitative emission standards. The Department considers it more appropriate to address the quantitative emission standards in the body of the permit rather than the summary table.

In response to this comment from U.S. EPA Region IX, the Department has revised the summary table in Section XXVIII.A of the draft permit so that, in the column labeled "Control Measures," the phrase "not applicable" has been replaced with the phrase "equipment specifications." The Department does not consider this change to satisfy U.S. EPA's suggestion that the table should include "the specific means used to achieve [the emission limit]," but the Department does consider the description to be accurate and adequate for the purposes of the summary table.

5. U.S. EPA's comment: *The CO emission limit in the draft permit is 0.0055 lb/bhp·hr. This is lower than the rates for other internal combustion engines in the Clearinghouse.*

Department's response: The observation is noted. As discussed in detail in Section X.A.1.e herein, when evaluating BACT for a particular emission unit, the Department considers emission limits that have been imposed on similar emission units at stationary sources in other States only to the extent that they may be informative as to (1) the technical feasibility of certain control options, (2) the degree of emission reduction achievable, and (3) the relative weights that other permitting authorities are assigning to the various factors required to be considered under the statutory BACT provision. The fact that other agencies may have made less stringent control technology determinations in the past is of no value to the Department in making its preliminary CO BACT determination for the internal combustion engines at the proposed refinery.

The Department also notes that the CO emission limit of 0.0055 lb/bhp-hr cited by U.S. EPA Region IX represents the emission limit that was included in the preliminary draft permit provided by the Department in October 2003. This value was based upon the data provided in Table 3.4-1 of U.S. EPA's AP-42 emission factor compilation. The Department's preliminary BACT determination has since been revised, consistent with the emission standards for model year 2006 and later compression-ignition, non-road engines as codified at 40 CFR § 89.112. For the emergency generator engine, with a rated power output in excess of 560 kilowatts, the relevant emission standards are known as the "Tier 2" standards and include a limit of 3.5 grams of CO per kilowatt-hour of output. For the emergency fire water pump engines, each with a rated power

output between 130 and 560 kilowatts, the relevant emission standards are known as the "Tier 3" standards and include a limit of 3.5 grams of CO per kilowatt-hour of output. These emission standards are slightly less stringent than the cited value of 0.0055 lb/bhp-hr. The less stringent CO emission limit has been adopted by the Department in order to allow for a significantly more stringent NO_X BACT emission limit, as described in detail in Section V.M.3 herein.

6. U.S. EPA's comment: *Equipment design standard selected as BACT.*

Department's response: The observation is noted.

7. U.S. EPA's comment: *Diesel catalyst eliminated due to cost of $30,000 per ton of CO reduced. Instances found where catalyst used on similar engines. The draft TSD makes no comparison between Arizona Clean Fuels refinery and other facilities.*

Department's response: The Department notes that the $30,000 per ton value cited by U.S. EPA Region IX represents the emission limit that was included in the preliminary draft Technical Support Document provided by the Department in October 2003. That value was erroneous. Section V.M.3 herein has been revised to show the correct value of $100,000 per ton.

As discussed in detail in Section X.A.1.e herein, when evaluating BACT for a particular emission unit, the Department considers emission limits that have been imposed on similar emission units at stationary sources in other States only to the extent that they may be informative as to (1) the technical feasibility of certain control options, (2) the degree of emission reduction achievable, and (3) the relative weights that other permitting authorities are assigning to the various factors required to be considered under the statutory BACT provision. The Department is not aware of any instances where oxidation catalyst has been successfully employed on a similar, compression-ignition, internal combustion engine in order to achieve compliance with a CO emission limit that is more stringent than the limits in the proposed permit. If such an installation existed, the Department would consider that installation in this context. The Department's rejection of oxidation catalyst as BACT for the internal combustion engines is based primarily on unreasonable, adverse economic impacts, characterized by a cost effectiveness of $100,000 per ton. This determination would be unlikely to be affected by any information pertaining to other facilities that may employ oxidation catalyst.

8. U.S. EPA's comment: *Combustion modifications made to control NO_X emissions are often counterproductive to minimizing CO emissions.*

Department's response: The observation is noted. The Department agrees with this general observation.

9. U.S. EPA's comment: *May be possible to achieve indicated NO_X and CO emission rates individually with combustion modifications. Uncertain about feasibility of achieving both rates simultaneously. Request manufacturer's information to ensure simultaneous emissions reductions achieved in practice.*

Department's response: These comments from U.S. EPA Region IX are somewhat unclear; it appears that the comments may reflect internal notes or observations that were inadvertently included in the comments provided to the Department.

The Department has determined that the preliminary NO_X and CO BACT emission limitations for the internal combustion engines are achievable simultaneously. This determination is based, in part, on information compiled by U.S. EPA's Office of Mobile Sources. For example, in its October 2001 Nonroad Diesel Emission Standards: Staff Technical Paper (EPA-420/R-01-052), U.S. EPA stated that "[b]ased on the information we have gathered to date, we reaffirm that the Tier 3 standards in [40 CFR part 89] are feasible in the timeframe established in the rule" and that "the fact that a nonroad engine and equipment manufacturer (Caterpillar) has provided evidence that it can meet the Tier 3 standards four years in advance of 2006 provides us with additional assurance that the standards are feasible."

10. U.S. EPA's comment: *If reductions can be achieved and emissions will be less than those using CO catalyst, modifications OK as BACT.*

Department's response: Again, this comment from U.S. EPA Region IX is somewhat unclear. The preliminary CO BACT determination for the internal combustion engines requires the use of engines that are certified by the engine manufacturer to be compliant with the emission standards for model year 2006 and later compression-ignition, non-road engines codified at 40 CFR § 89.112. Emissions of CO will not be less than the emissions would be if an oxidation catalyst were used; as described in detail in Section V.M.3 herein, the use of an oxidation catalyst was evaluated by the Department and was rejected as BACT. The Department disagrees with the comment to the extent that it suggests that the Department's preliminary BACT determination is deficient because oxidation catalyst is not required.

11. U.S. EPA's comment: *The Department should revise its justification for the CO BACT determination and include the design standard as a control measure in the permit.*

Department's response: The Department interprets this comment to refer to the summary table in Section XXVIII.A of the draft permit.

The Department disagrees with the comment from U.S. EPA Region IX to the

extent that it suggests that the proposed permit terms for the internal combustion engines are deficient. Attachment C of the draft permit includes 29 sections, with each section generally dedicated to a particular process unit or other equipment at the proposed refinery. Each section includes a summary table that lists and describes the emission units covered by that section and provides a brief description of the air pollution control devices or other control measures applied to those emission units. None of these summary tables, including the table in Section XXVIII.A of the draft permit, includes any quantitative emission standards. The Department considers it more appropriate to address the quantitative emission standards in the body of the permit rather than the summary table.

In response to this comment from U.S. EPA Region IX, the Department has revised the summary table in Section XXVIII.A of the draft permit so that, in the column labeled "Control Measures," the phrase "not applicable" has been replaced with the phrase "equipment specifications."

O. Cooling Tower

1. U.S. EPA's comment: *Indirect-contact cooling tower technology was determined by ADEQ to be cost prohibitive with projected cost of $20,000 per ton VOC emissions reduced.*

Department's response: The Department is in general agreement with this observation by U.S. EPA Region IX, but a clarification is in order. The Department did not determine that the adverse impacts of the more effective control option are "prohibitive" in the sense that the Department would disallow the use of that control option; rather, the Department determined that the adverse impacts of requiring such use would outweigh the beneficial impacts.

2. U.S. EPA's comment: *As for Group C storage tanks, economic analysis [for cooling tower VOC control options] should have broader focus.*

Department's response: The Department considers this comment from U.S. EPA Region IX to be somewhat unclear. The Department's BACT analysis for VOC emissions from the cooling tower at the proposed Arizona Clean Fuels refinery included, for each of the two control options that was determined to be technically feasible, an evaluation of the beneficial and adverse environmental, energy, and economic impacts and other costs. Based on the results of this evaluation, the highest-ranked control option (i.e., the use of an indirect-contact cooling tower) was rejected, because the adverse impacts collectively outweighed the beneficial impacts. The Department disagrees with any suggestion that its BACT analysis should consider any factors other than those that are specifically enumerated in the Clean Air Act and in the PSD regulations.

draft

3. U.S. EPA's comment: *Unable to justify elimination of indirect contact tower on grounds of adverse economic impact.*

Department's response: The Department considers this comment from U.S. EPA Region IX to be somewhat unclear. As described in detail in Section V.L.2 herein, the Department's BACT analysis for VOC emissions from the cooling tower at the proposed Arizona Clean Fuels refinery included did result in elimination of indirect-contact cooling tower technology. This elimination was not based solely on the grounds of adverse economic impact. Instead, the Department determined that elimination of this control option was justified because the adverse energy and economic impacts, collectively, would outweigh the beneficial environmental benefits.

4. U.S. EPA's comment: *The Permittee and ADEQ should consider whether indirect-contact cooling towers are utilized at other refineries.*

Department's response: As discussed in detail in Section X.A.1.e herein, when evaluating BACT for a particular emission unit, the Department considers emission limits that have been imposed on similar emission units at stationary sources in other States only to the extent that they may be informative as to (1) the technical feasibility of certain control options, (2) the degree of emission reduction achievable, and (3) the relative weights that other permitting authorities are assigning to the various factors required to be considered under the statutory BACT provision. Any information relating to the use of indirect-contact cooling towers at other petroleum refineries or petrochemical manufacturing facilities would be considered by the Department in this context.

The Department is not aware of any petroleum refinery or petrochemical manufacturing facility that uses an indirect-contact cooling tower for its primary cooling load. In fact, based on a review of recent permitting actions by other permitting authorities, the Department is not aware of any other permitting authority that has even identified or considered indirect-contact cooling as a technically feasible control option. For example, in a PSD permit issued by the Oklahoma Department of Environmental Quality (ODEQ) to the Conoco refinery in Ponca City, Oklahoma in July 2002, "hydrocarbon monitoring" is the only control option identified. The PSD permit requires monthly sampling and analysis to determine the VOC of the cooling water. Similarly, the Texas Commission on Environmental Quality (TCEQ) (formerly the Texas Natural Resource Conservation Commission) in 1998 and 2000 issued major nonattainment NSR permits to Phillips Chemical Company and American Acryl LP, respectively. In each of these instances, TCEQ determined that monthly sampling and analysis for cooling water VOC concentration constitutes LAER. Based on these permitting actions, the Department considers it clear that other permitting authorities also are unaware of any petroleum refinery or petrochemical manufacturing facility that uses indirect-contact cooling towers.

Finally, in establishing NESHAP emission standards for new sources in the petrochemical manufacturing industry, U.S. EPA has repeatedly determined that periodic monitoring for cooling water VOC concentration, or for other surrogate parameters that might be indicative of leaks, represents the best emission control technique that is achieved in practice. (The most recent of these NESHAP rulemakings is 40 CFR 63 subpart FFFF, promulgated in November 2003 for "Miscellaneous Organic Chemical" manufacturing facilities. The Department has referenced petrochemical manufacturing source categories here rather than petroleum refineries, because U.S. EPA failed even to identify cooling towers or heat exchange systems as emission sources when establishing NESHAP for petroleum refineries in 1995.) As described in detail in Section X.H.2.a(1) herein, each these NESHAP rulemakings manifests two determinations that U.S. EPA made with regard to the relevant source category: First, no source had achieved a more stringent level of control, and second, after considering costs and other impacts, no more stringent level of control was achievable. Based on these rulemaking actions, the Department considers it clear that U.S. EPA also is unaware of any petroleum refinery or petrochemical manufacturing facility that uses indirect-contact cooling towers.

5. U.S. EPA's comment: *With regard to the leak detection and repair program: The monitoring plan calls for monitoring of "total VOC, total organic carbon, one or more speciated organic compounds, or other representative substances that would indicate the presence of a leak in the heat exchange system." The permit should be specific about which indicators or parameters are sampled and the levels that constitute a leak. Non-specific language creates uncertainty about the actual compliance method that will ultimately be used. Also, the alternate monitoring plan allowed by the permit allows the Permittee to negotiate its monitoring program "off permit" and bypass the process required for approval of alternative plans. This could result in potential difficulty disputing a finding by ADEQ that the facility met the requirements of the permit. The permit should specify the indicator, parameter, or condition that indicates leak; the indicator or parameter levels that constitute a leak; and the records maintained to document compliance. Alternative methods for leak detection should be specifically stated in permit or condition should be deleted.*

Department's response: The cited provisions of the draft permit provided to U.S. EPA Region IX in October 2003 were taken verbatim from the NESHAP for synthetic organic chemical manufacturing facilities (at 40 CFR § 63.104(b)-(c)). These provisions have repeatedly been determined by U.S. EPA to be sufficient to meet all statutory requirements for enforceability of monitoring and recordkeeping requirements, including the enhanced monitoring provisions at Clean Air Act §§ 114(a)(3) and 504(b). Therefore, the Department disagrees with any suggestion by U.S. EPA Region IX that these work practice requirements are not sufficiently enforceable.

However, the Department notes that the work practice requirements representing

BACT have changed significantly since the first draft permit was provided to U.S. EPA Region IX in October 2003. Rather than quarterly sampling and analysis of cooling water using a threshold VOC concentration of 1 ppmv to define a leak, the Department is now proposing to require continuous monitoring with a threshold VOC concentration of 0.05 ppmv. The Department estimates that this change will reduce allowable VOC emissions by at least 200 tons per year. The monitoring requirements in the proposed permit have changed accordingly, in a way that the Department considers likely to alleviate the concerns voiced by U.S. EPA Region IX.

6. U.S. EPA's comment: *With regard to the leak detection and repair program: The permit requires monthly monitoring for first 6 months then quarterly monitoring thereafter, consistent with the SOCMI NESHAP. BACT determinations may be more stringent than NESHAP requirements. The Valero refinery in Corpus Christi, TX required to sample on monthly basis at all times.*

Department's response: As noted previously, the work practice requirements representing BACT have changed significantly since the first draft permit was provided to U.S. EPA Region IX in October 2003. Rather than quarterly sampling and analysis of cooling water using a threshold VOC concentration of 1 ppmv to define a leak, the Department is now proposing to require continuous monitoring with a threshold VOC concentration of 0.05 ppmv. The Department estimates that this change will reduce allowable VOC emissions by at least 200 tons per year relative to the work practice requirements preliminarily determined to represent BACT.

P. Reactors and Distillation Columns

1. U.S. EPA's comment: *Why aren't the reactors and the debutanizer [in the Catalytic Reforming Unit] listed as emission units?*

Department's response: These process vessels are designed to operate with no emissions; thus, they are not "emission units" as that term is defined at A.A.C. R18-2-101(38).

2. U.S. EPA's comment: *Why aren't the reactors and columns [in the Distillate Hydrotreater Unit] listed as emission units?*

Department's response: These process vessels are designed to operate with no emissions; thus, they are not "emission units" as that term is defined at A.A.C. R18-2-101(38).

3. U.S. EPA's comment: *The TSD states that there is one vent stream from the two distillation columns and one vent stream from the three reactors [in the Butane Conversion Unit]. Each of these vent streams is routed to the RFG system and*

combusted in enclosed combustion devices. Since these distillation columns and reactors are emission units, we believe there should be a BACT discussion in the TSD on these units.

Department's response: These process vessels are designed to operate with no emissions; thus, they are not "emission units" as that term is defined at A.A.C. R18-2-101(38).

The term "vent stream" as used in Sections IV.B.12 and IV.B.14 herein is not indicative of any potential for these process vessels to emit regulated air pollutants under their physical and operational design. Instead, this term is used as it is defined in the applicable NSPS regulations discussed in Sections IV.B.12 and IV.B.14 (40 CFR § 60.661 and 40 CFR § 60.701, respectively). The NSPS definition of the term "vent stream" is very broad, and encompasses gas streams that are discharged from one process to another process. This includes gas streams that are routed to a petroleum refinery fuel gas system, as is the case with the distillation column and reactor overhead streams in the Butane Conversion Unit.

Q. Catalyst Regenerators

1. U.S. EPA's comment: *We believe that the permit should include BACT limits for criteria pollutants since the Catalyst Regenerator is an emissions unit. The permit currently contains only emission limits from MACT Subpart UUU.*

Department's response: The Department agrees with this comment. The permit has been revised to include emission limits representing BACT for CO and NO_X emissions from the Catalytic Reforming Unit Catalyst Regenerator and the Butane Conversion Unit Catalyst Regenerator.

2. U.S. EPA's comment: *Exhaust gas CO and NOx concentrations of 200 ppm were assumed by the applicant. What is the basis for this assumption?*

Department's response: The exhaust gas CO and NO_X concentrations are based on the Permittee's knowledge of the processes.

3. U.S. EPA's comment: *Has the source ever provided data confirming the gas concentrations for CO, NOx, and perchloroethylene?*

Department's response: As the emission units do not yet exist, the Department recognizes that no data confirming the concentration values provided by the applicant can be provided.

4. U.S. EPA's comment: *We believe the permit should require source testing to confirm these exhaust gas concentrations.*

draft

Department's response: With regard to CO and NO_X emissions from both the Catalytic Reforming Unit Catalyst Regenerator and the Butane Conversion Unit Catalyst Regenerator, the Department agrees with this comment, and the permit has been revised accordingly.

With regard to perchloroethylene emissions from the Catalytic Reforming Unit Catalyst Regenerator, there are no applicable emission limits for perchloroethylene specifically, so no performance testing for this pollutant is necessary. However, pursuant to 40 CFR 63, subpart UUU, there is an emission standard for organic HAP, which would include perchloroethylene. This emission standard is expressed as a limit on total organic compound emissions and is included in the proposed permit. Similarly, subpart UUU includes a requirement for performance testing to demonstrate compliance with the limit on total organic compounds emissions, and this testing requirement also is included in the proposed permit.

With regard to perchloroethylene emissions from the Butane Conversion Unit Catalyst Regenerator, there are no applicable emission limits for perchloroethylene or any other organic compounds, so no performance testing is necessary.

5. U.S. EPA's comment: *The applicant used material balance to estimate emissions o f hydrogen chloride and chlorine. As stated in the TSD , these calculations were not included in the application. We would like to see these calculations.*

Department's response: The comment is noted. The Permittee's calculations were not needed by the Department in order to perform its review of the permit application.

R. Benzene Reduction Unit

1. U.S. EPA's comment: *Does this unit have process heaters, or any other equipment that would require a BACT determination?*

Department's response: The Benzene Reduction Unit does not include any fired process heaters. The unit does include equipment in VOC service. The BACT analysis for this equipment is described in Section V.I.1 herein.

2. U.S. EPA's comment: *What is the underlying requirement dictating the use of a benzene reduction unit? Why was BenSat chosen over other possible technologies?*

Department's response: These questions are not within the scope of the permit application review performed by the Department, and the answers to these questions are not material to the Department's decision regarding the permit

draft

application.

S. Equipment Leaks

1. U.S. EPA's comment: *Dismisses lower leak definition because only feasible where low-leak equipment is used. Bay Area refineries have to meet a 100 ppm leak limit, and although their regs define a leak as measured 1 cm from the interface, Bay Area's senior inspector verified that they always follow EPA's Method 21 and measure at the leak interface. I was also told that the BACT database (BAAQMD's) needed to be updated to reflect their current measurement practices. Therefore, a 100ppm leak definition, measured at the leak interface needs to be considered as BACT. If ADEQ continues to maintain that 100ppm leak definition is infeasible without leakless equipment, and that leakless equipment is cost prohibitive, ADEQ should calculate annual VOC emissions using a 100ppm leak definition, and add the difference to the amount of VOC controlled in calculating the cost/ton.*

Department's response: The Department has confirmed that this comment from U.S. EPA Region IX is correct in that Bay Area Air Quality Management District Regulation 8, Rule 18 requires a 100 ppmv leak definition for valves and connectors in gas/vapor and liquid service. As a result of this comment, the Department required that the Permittee address this more stringent control option in its BACT analysis, and the Permittee agreed to propose as BACT a 100 ppmv leak definition for valves and connectors in gas/vapor and liquid service. This provision has been incorporated into the draft permit.

2. U.S. EPA's comment: *TSD does not specify what type of equipment will actually be used; only "to the extent practicable."*

Department's response: The observation is correct, and the comment is noted. The Department has determined that BACT for equipment leaks is a stringent LDAR program that includes frequent monitoring, extremely low leak definition levels, stringent repair deadlines, and limits on the number of leaking components. The Department considers this approach to be more stringent and much more flexible than a program based on equipment design standards. The stringent LDAR program requirements will provide the Permittee with significant incentive to use leakless equipment wherever it is technically and economically reasonable to do so.

3. U.S. EPA's comment: *Cost analysis for pumps shows incremental cost rather than average cost. The top control option must be compared to no control, or in this case, simple seals.*

Department's response: With regard to the first part of this comment, the observation is noted, and the Department agrees that the observation is accurate. With regard to the opinion expressed in the second part of the comment, the

Department is not aware of any provision of the PSD program that would support this opinion, and the Department strongly disagrees. As discussed in detail in Sections X.A.1.b and X.A.1.c herein, the Department, acting as permitting authority, has the responsibility for all aspects of the BACT determination. This includes the form of expression of costs, emission reductions, and cost effectiveness when evaluating the beneficial environmental impacts and adverse economic impacts of alternative control technologies. The oversight authority implemented by U.S. EPA Region IX does not extend to imposition of prescriptive policies such as that described by this comment.

4. U.S. EPA's comment: *There is no demonstration as to why the cost is prohibitive to Arizona Clean Fuels but not other refineries.*

Department's response: The Department has presumed, for the purpose of preparing this response, that this comment from U.S. EPA Region IX is referring to the adverse economic impacts of a control option that would require the use of leakless pumps. The Department has also presumed that the word "prohibitive," as used in this comment, refers to a determination by the Department that a requirement for leakless pumps would ruin the economic viability of the proposed refinery and would cause the project to be canceled. Given these presumptions, the Department emphatically states that no such determination was made. As discussed in detail in Section V.I.1 herein, the Department's decision not to require leakless pumps was based on a determination that the adverse economic impacts of this requirement would greatly outweigh its beneficial environmental impacts. The Department made this determination specifically for the proposed refinery project and made no attempt to ascertain whether a requirement for leakless pumps would be more or less economical at this facility than at any other petroleum refinery, as this information would not be material to the Department's BACT determination.

T. Petroleum Coke Storage, Handling, and Loading

1. Entire Operation

a. U.S. EPA's comment: *The TSD indicates that the available control technologies are enclosures with baghouses or wet dust suppression techniques. However, EPA has also seen the use of water slurry transport systems with storage in hydrobins. Replacing a conventional coke handling system (storage piles, conveyors, front-end loader, etc...) with the slurry system reduced PM_{10} emissions at the Ultramar refinery in South Coast by an estimated 36.5 tpy. The BACT analysis should be re-done considering a slurry transport system to be an available control technology. Otherwise, the TSD should include a discussion of why such a system is not technically feasible for this facility.*

Department's response: For the purpose of preparing this response, the

Department has presumed that the refinery cited in this comment from U.S. EPA Region IX is the Valero Energy Corporation petroleum refinery in Wilmington, California.

The Department is aware that the Internet web site of the South Coast Air Quality Management District in California includes a listing for a BACT determination for the coke handling operations at the Valero (formerly Ultramar) refinery. This database entry pertains to Permit Application No. 323709 and indicates that the permit was issued in 1997. The database entry indicates that the requirements relating to coke handling and storage include the following:

- Maintain moisture content of coke at or above 12 percent.
- Use of water slurry transfer and hydrobin storage.
- Daily wash down of surface under hydrobins.
- Compliance with South Coast Air Quality Management District Rule 1158.

The Department notes that, even if the "hydrobin" technology that is apparently used by the Valero refinery would provide a greater degree of control than would the silo and baghouse proposed by the Permittee, the opportunity for emission reduction is much less than the 36.5 tons per year cited by U.S. EPA Region IX. As discussed in Section III.K herein, the maximum allowable emissions from the Coke Silo Baghouse are 0.4 tons per year. (Actual emissions are expected to be much less, as the exhaust gas flow rate through the baghouse will be zero except during periods when coke is actually being conveyed into the silo.) The Department is not aware of any data quantifying the actual particulate matter emissions achievable with the alternative "hydrobin" system. Thus, the incremental reduction in particulate matter emissions that could be achieved by replacing the silo/baghouse configuration with "hydrobins" would be a maximum of 0.4 tons per year and would likely be considerably less. Although no data quantifying the water usage of such a system are readily available, the Department does not consider the emission reductions achievable with the "hydrobin" system to outweigh the adverse effects associated with increased water usage at the proposed refinery site in the Sonoran desert.

b. U.S. EPA's comment: *For handling operations other than the silo, the BACT analysis says that the Department agrees with the use of work practices as BACT and the permit requires that the moisture content of the coke be maintained at a minimum of 8.3%. However, the TSD does not provide the basis for or discuss the significance of this number and EPA has seen requirements for higher moisture contents (12%; see South Coast Air Quality Management District citation in previous comment). Provided that the Department identifies BACT as wet dust*

suppression after the re-evaluation discussed above, the TSD should discuss how a minimum moisture content of 8.3% was selected.

Department's response: South Coast Air Quality Management District Rule 1158, which sets forth the primary control requirements for the Valero refinery discussed in the previous comment, includes a minimum moisture content of 8.3 percent for petroleum coke that is stored in open storage or conveyed in non-enclosed conveyors. Prior to receipt of this comment and the previous comment from U.S. EPA Region IX, the Department was not aware of any work practice requirements for any petroleum coke handling operation that are more stringent than those contained in Rule 1158. The Department agrees that a minimum petroleum coke moisture content of 12 percent, as required for the Valero refinery discussed in the previous comment, will provide greater emission reduction than would a minimum moisture content of 8.3 percent as required by the South Coast rule. The proposed permit has been revised to incorporate a minimum moisture content of 12 percent.

c. U.S. EPA's comment: *The San Joaquin Valley and Bay Area BACT guidelines recommend the use of surfactants when using wet dust suppression techniques. The TSD does not discuss the possibility of using surfactants or other chemical additives at this facility and should do so.*

Department's response: The comment is noted. The Department recognizes that chemical surface-active agents may be used in conjunction with water sprays in order to improve wetting. Under the terms of the proposed permit, the Permittee is not prohibited from using chemical surface-active agents in order to achieve and maintain the minimum moisture content of petroleum coke throughout the petroleum coke storage, handling, and loading operations. The means to be employed by the Permittee in order to ensure that this minimum moisture content requirement is met on a continuous basis will be selected by the Permittee.

2. Coke Pit and Pad

U.S. EPA's comment: *The TSD states that the Permittee considered constructing a complete enclosure around the coke pit/pad and says it was prohibitive due to total annual operating costs of over $600,000 per year but it does not discuss what makes this option so expensive. The TSD should discuss this issue in greater detail and provide estimates for the cost-effectiveness of this control option.*

Department's response: The comment from U.S. EPA is generally correct in that the Department decided that the most effective control option for particulate

matter emissions from the Coke Pit and Coke Pad, comprising a complete enclosure with a closed-vent system routed to a fabric filter baghouse, does not represent BACT due its unreasonable costs and minimal environmental benefit. However, two clarifications are in order. First, the Department has presumed that the word "prohibitive," as used in this comment, refers to a determination by the Department that a requirement for a complete enclosure over the Coke Pit and Coke Pad would ruin the economic viability of the proposed refinery and would cause the project to be canceled. The Department emphatically states that no such determination was made. The Department's decision not to select this control option as BACT was based on a determination that the adverse economic impacts of this requirement would greatly outweigh its beneficial environmental impacts.
Second, the comment from U.S. EPA Region IX incorrectly characterizes the annualized cost figure of $600,000; this value represents not the operating cost, but the total annualized costs, including capital recovery.

The primary cost elements that make the cited control option "so expensive," as it is described in this comment from U.S. EPA Region IX, are the baghouse, baghouse auxiliaries, and the closed-vent system building that would be needed in order to enclose completely the Coke Pit and Coke Pad. The Permittee's cost estimate for the baghouse and auxiliary equipment, assuming an exhaust gas flow rate of 40,000 actual cubic feet per minute, is $150,000. This value is wholly consistent with the EPA Control Cost Manual (Section 6, Chapter 1, 6th ed., published December 1998).

The Permittee's cost estimate for the building was based on a cost factor of $150 per square foot. In response to this comment, the Department reviewed available literature to ascertain the representativeness of this cost factor. According to Square Foot Costs by the R.S. Means Company (24th ed., published 2003), the cost of an aircraft hangar with a 40-foot ceiling and an area of approximately 15,000 square feet is $87.90 per square foot. The Department considers an aircraft hangar to be a structure with a generally similar design to that which would be required for this application.

The Permittee's estimate of total annualized cost includes two other items that were corrected by the Department. First, the Permittee estimated capital recovery using an assumed equipment life of 10 years for both the baghouse and the building. The Department considers 20 years a more reasonable equipment life for this equipment. Second, the Permittee included an unexplained cost of $37,000 per year for ash disposal; the Department does not consider any disposal cost for the coke handling operation to be attributable to the control option being evaluated. Revising the Permittee's cost estimate to reflect these changes yields a total annualized cost of approximately $420,000. This cost is not reasonable in light of the minimal environmental benefits.

3. Coke Crusher

a. U.S. EPA's comment: *The permit states that the coke crusher must be "installed, maintained, and operated with a partial enclosure such that it is surrounded on all sides and on top." What is meant by "partial" if the enclosure is required on all sides and on top?*

Department's response: The Coke Crusher will not be enclosed on its bottom; the crushed material will fall onto an enclosed conveyor belt that will convey the coke to the Coke Silo. The Department has used the term "partial enclosure" in the context of this proposed permit term in order to differentiate the required configuration of the Coke Crusher from a "total enclosure," which is a term that U.S. EPA routinely defines in its air quality regulations. A "total enclosure" generally is one that is maintained at negative pressure and that completely surrounds a source of emissions, such that all emissions are captured and vented to a control device.

b. U.S. EPA's comment: *While the Department considered the use of an enclosure and baghouse for the entire coke pit and pad, it apparently did not make the same considerations for the crusher by itself. If walls are required on every side and the top, the Department should evaluate the merits of enclosing only the crusher and venting it to a baghouse.*

Department's response: As described in the response to the previous comment, the Coke Crusher is completely enclosed, except for the point at which the moist, crushed coke drops onto the conveyor belt. The Coke Conveyor also is required to be enclosed. Requiring a complete enclosure over this drop point, with a forced draft system and a baghouse, would not achieve any additional control of particulate matter emissions.

draft