# APPENDIX S

# SURFACE WATER

Project 90250
Revision 0, 5/6/2011

# OFF-SITE DRAINAGE REPORT

# OFF-SITE DRAINAGE REPORT
# SOLID WASTE FACILITY PLAN

# MARANA REGIONAL LANDFILL

# PIMA COUNTY, ARIZONA

Prepared for
Marana Regional Landfill

May 2011

Prepared by

CORNERSTONE
Environmental Group, LLC
17 West Wetmore Road, Suite 310
Tucson, Arizona 85705

Project 90250

**Off-Site Drainage Report**
**Marana Regional Landfill**

**Pima County, Arizona**

The material and data in this report were prepared under the supervision and direction of the undersigned. This report was prepared consistent with current and generally accepted hydrologic, environmental and civil engineering consulting principles and practices that are within the limitations provided herein.

Cornerstone Environmental Group, LLC

Jason A. Polakow, P.E. (IL)
Project Engineer

Registered Professional Engineer (Civil)
CERTIFICATE NO. 27290
GARTH R. BOWERS
Date Signed 5/6/11
ARIZONA U.S.A.
Exp 9/30/11

Garth R. Bowers, P.E.
Client Manager/Certifying Engineer

# TABLE OF CONTENTS

**LIST OF TABLES AND DRAWINGS** **iv**

**1 INTRODUCTION ..... 1-1**

1.1 GENERAL ..... 1-1
1.2 HYDROLOGY ..... 1-1
1.3 HYDRAULICS ..... 1-2

**2 HYDROLOGY ..... 2-1**

2.1 BACKGROUND ..... 2-1
2.2 PEAK FLOW RATE DETERMINATIONS ..... 2-1

**3 DRAINAGE DESIGN ..... 3-1**

3.1 BACKGROUND ..... 3-1
3.2 HEC-RAS DESIGN CALCULATIONS AND RESULTS ..... 3-1
*3.2.1 Geometric Data ..... 3-1*
*3.2.2 Flow Data and Boundary Conditions ..... 3-3*
*3.2.3 Hydraulic Calculations ..... 3-3*
*3.2.4 Results ..... 3-4*
3.2.4.1 Hydrology ..... 3-4
3.2.4.2 Hydraulics ..... 3-4
*3.2.5 Conclusions ..... 3-5*

**LIMITATIONS ..... L-1**

**REFERENCES ..... R-1**

**APPENDICES**

**APPENDIX A HYDRAULIC DESIGN CALCULATIONS**

**APPENDIX B DRAWINGS**

# LIST OF TABLES AND DRAWINGS

## TABLES

Table SA1 HEC-RAS Existing Conditions Modeling Results for 21,000 cfs
Table SA2 Error Warnings and Notes for HEC-RAS Existing Conditions Modeling
Table SA3 HEC-RAS Proposed Conditions Modeling Results for 21,000 cfs
Table SA4 Error Warnings and Notes for HEC-RAS Proposed Conditions Modeling
Table SA5 Difference in Water Surface Elevations Between Proposed and Existing Conditions
Table SA6 Manning's Equation Calculations for Diversion Channels

## DRAWINGS

Drawing SA1 Watershed Delineation of Brawley Wash
Drawing SA2 Watershed Delineation of East Branch of the Brawley Wash
Drawing SA3 Marana Regional Landfill Base Map
Drawing SA4 Floodplain Limits Under Existing and Proposed HEC-RAS Conditions

# 1 INTRODUCTION

## 1.1 General

This off-site drainage study has been prepared in conjunction with the initial submittal of the Marana Regional Landfill (MRLF) Solid Waste Facility Plan (SWFP) permit application. The MRLF is a municipal solid waste landfill (MSWLF) located in Pima County, Arizona. This landfill is owned and operated by DKL Holdings, Inc., 8912 East Pinnacle Peak Road, Scottsdale, Arizona, 85255. The MRLF property is an approximately 591-acre parcel located approximately eight miles west of Interstate 10, at the western jurisdictional limits of the town of Marana, Arizona, near the Pima/Pinal county line. The approximate latitude and longitude of the site are 32 degrees, 24 minutes, and 54 seconds north and 111 degrees, 16 minutes, and 38 seconds west, respectively. The site is located in Township 12 South, Range 10 East, Section 1, Pima County, Arizona. The Pima County Assessor's office parcel identification number for the site is 208-24-0010.

In general, the landfill consists of a final landfill footprint of approximately 415-acres. The site is surrounded by undeveloped agricultural land. The East Branch of the Brawley Wash crosses the property at the extreme northeast corner. As part of the landfill site design, this portion of the East Branch of the Brawley Wash will be improved and revegetated to reintroduce riparian habitat to the area, and the elevation along the west bank of the channel will be raised and armored to prevent flood waters from entering the landfill during extreme storm events. Diversion channels will be constructed along the south and west boundaries of the site to divert off-site stormwater around the landfill to accommodate the proposed site design location.

## 1.2 Hydrology

The general drainage in this region, surrounding the MRLF, is located in the Northern Avra Basin approximately one and a half miles southwest of the Santa Cruz River and approximately one half mile south of the confluence of the East Branch and West Branch of the Brawley Wash. The Brawley Wash watershed (also known as the Altar Wash-Brawley Wash watershed, or Altar and Avra Valleys) area is approximately 1,400 square miles. The watershed extends from just north of the Mexican border at the south end to just north of the Pima County line. The Brawley Wash begins as Altar Wash near the Mexican border and flows to the north through the alluvial valley between the Sierrita and Tucson Mountains on the east and the Baboquivari, Roskruge, and Silverbell Mountains on the west. The Altar Wash becomes the Brawley Wash approximately eight miles south of Robles Junction and continues to flow north as a single braided stream until it crosses Manville Road, at which point it diverges into the East Branch of Brawley Wash and the West Branch of Brawley

Wash, which have hydraulically distinct floodplains. After approximately ten miles, these branches reconvene to form Brawley Wash, which becomes Los Robles Wash and ultimately flows into the Santa Cruz River. The delineation of the entire Brawley Wash watershed is shown in more detail on Drawing SA1 located in Appendix A. MRLF is generally impacted from the south by the East Branch of the Brawley Wash drainage area, which is approximately 66.4 square miles. The East Branch of the Brawley Wash is adjacent to the northeast corner of the site.

## 1.3 Hydraulics

As indicated by the hydrologic discussion in Section 1.2, the East Branch of the Brawley Wash impacts the MRLF property from the south and crosses the northeast corner of the site. Overbank flows from the East Branch of the Brawley Wash (which break out upstream of the MRLF property) will be diverted around the property through a perimeter off-site stormwater diversion channel along the southern and western property line as well as a constructed channel along the eastern boundary of the property. In addition, the site will be protected from off-site run-on from these overbank flows by a 15-foot high landscape screening berm along the southern and western perimeter of the site. The diversion channels have been conceptually sized to manage the flows arriving at the southern property boundary to ensure that adequate buffer area is available for these channels. Detailed design of these channels will be developed as part of the Development Plan for the MRLF property and will be reviewed and approved by the Town of Marana as the local floodplain administrator.

The major hydraulic design to ensure compliance with 40 CFR §258 is the design of the channel/floodplain restoration area for the East Branch of the Brawley Wash across the northeastern corner of the MRLF property. This channel design was analyzed using the HEC-RAS program for pre- and post-development conditions for the 100-year storm event to demonstrate that there would be no restriction in the flow of the 100-year storm event that would result in increases in water surface elevations outside the property limits greater than one foot per FEMA floodplain management requirements. The results of this evaluation are presented in Section 3 of this report.

# 2 HYDROLOGY

## 2.1 Background

The general drainage in this region flows northerly within the East Branch of the Brawley Wash drainage area, which contributes stormwater runoff to the site's southern and eastern boundaries. The delineation of the East Branch of the Brawley Wash watershed is shown in more detail on Drawing SA2 located in Appendix A of this report.

The location of the project site is approximately one half mile south of the confluence of the East Branch and West Branch of the Brawley Wash. The East Branch of the Brawley Wash crosses the northeast corner of the site. Ground cover within this watershed consists of desert vegetation with low cover density (based on review of aerial photography). The ground slope is fairly flat through the MRLF site. This is a region of disperse flow with shallow, broad, partially vegetated flow areas. Natural vegetation is denser in and near the East Branch of the Brawley Wash.

A diversion channel is proposed along the southern boundary of the site to direct overbank flows arriving along the site's southern boundary around the site to the west, to the proposed outfall located at the site's northwest corner, which is the historical location of discharge for the western portion of the site. Another diversion channel along the eastern boundary of the MRLF property is proposed to direct storm water along the site's southeastern and eastern boundary around the site to the north where it ties back into the main channel of the East Branch of the Brawley Wash.

## 2.2 Peak Flow Rate Determinations

The Federal Emergency Management Agency (FEMA) conducted a Flood Insurance Study (FIS) for Pima County during the mid 1990's which determined a peak flow rate for the Brawley Wash as it ran north as a single braided stream at Ajo Road. It continues north as a single braided stream until it crosses Manville Road, at which point it diverges into the East Branch of Brawley Wash and the West Branch of Brawley Wash. The FEMA study determined a 100-year peak flow rate of 35,000 cfs for the Brawley Wash prior to the divergence into the East and West Branches. FEMA estimated that the peak flow entering the West Branch of the Brawley Wash was 14,000 cfs and that a peak flow of 21,000 cfs entered into the East Branch of the Brawley Wash. The FEMA-listed flow rate for the East Branch of the Brawley Wash at Avra Valley Road (approximately 1.5 miles upstream of the MRLF property) is 21,000 cfs.

A more detailed study of the flow conditions north of the split between the East Branch and West Branch of Brawley Wash was performed using the HEC-2 model by Simons, Li &

Associates, Inc. (SLA) for the Pima County Flood Control District (SLA, 1996). This report noted the flow split assumed by FEMA was based on an earlier study by USGS that was based on approximate methods and that the HEC-2 analysis of flow split conditions indicated that more flow would be directed to the West Branch than the East Branch (approximately 21,000 cfs and 14,000 cfs, respectively). However, as a conservative assumption, SLA used a flow rate of 21,000 cfs in each branch of the Brawley Wash for their delineation of administrative floodway width.

CMG Drainage (CMG), a consultant for the Town of Marana, developed a hydrologic model using the FLO-2D modeling program to predict the peak flows from the Brawley Wash watershed, made up of the East Branch of the Brawley Wash and the West Branch of the Brawley Wash, for the 100-year, 24-hour storm event (CMG, 2010). CMG analyzed the Brawley Wash watershed on a regional level (from upstream of the flow split between the East Branch and West Branch to downstream of the confluence where these branches rejoin to form the Los Robles Wash). They applied the FEMA-listed 100-year flow rates to the unified channels upstream and downstream of the flow split and analyzed the effects of the actual topography in splitting the flows between the two branches of the Brawley Wash. The results from their modeling efforts determined a 100-year peak flow rate of approximately 14,000 cfs within the East Branch of the Brawley Wash and a peak flow rate of approximately 21,000 cfs within the West Branch of the Brawley Wash (CMG, 2010).

The CMG Drainage report stated the East Branch of the Brawley Wash channel upstream of the MRLF site does not have sufficient capacity to contain the 100-year peak flow rate of 14,000 cfs, resulting in overbank flow which flows generally northward at shallow depths. Some of the overbank flows from the East Branch will enter the project site along the south property boundary at sheet flow depths of approximately one to three feet. CMG's FLO-2D modeling results determined the total amount of this overbank flow reaching the southern property boundary to be approximately 2,750 cfs. Of this total, roughly 900 cfs intersects the southern boundary of the southwest ¼ of Section 1. The remaining flow of 1,850 cfs intersects the boundary of the southeast ¼ of Section 1. According to CMG, the greatest flow depths and conveyance are concentrated along the east property line (CMG, 2010).

As stated in Section 2.1 of this report, a diversion channel is proposed along the southern boundary of the site to direct overbank flows arriving along the site's southern boundary around the site to the west and a second diversion channel along the eastern boundary of the MRLF property is proposed to direct storm water along the site's southeastern and eastern boundary around the site to the north. The hydraulic design for these diversion channels is discussed in Section 3.2.1 of this report.

A peak flow rate of 21,000 cfs was used in the HEC-RAS hydraulic modeling efforts when comparing existing conditions to proposed landfill development conditions with respect to the requirements of 40 CFR §258. In addition, the floodplain was also modeled using a peak flow rate of 14,000 cfs to determine if development of the landfill would result in larger depth surcharges if analyzed with a lower flow rate as suggested by these previous studies. This conservative analysis indicated that surcharges would be acceptable for a wide range of

flow rates, indicating that precision in the hydrologic analysis is not crucial to the results of this study.

# 3 DRAINAGE DESIGN

## 3.1 Background

The MRLF property is an approximately 591-acre parcel, with a landfill footprint of approximately 415-acres, located 1/2 to 1-1/2 miles southeast of the confluence of the East Branch and West Branch of the Brawley Wash. The East Branch of the Brawley Wash crosses the northeastern corner of the site. The Town of Marana approved zoning for the site in 2010 which provided for development of the landfill footprint on the property. The majority of this area is located within the FEMA Zones A and AO (determined by approximate methods – no base flood elevations determined or flood depths of 1 to 3 feet (usually sheet flow on sloping terrain) with average flood depths determined). In 2010, DLK Holdings, Inc. commissioned Cornerstone to complete a fatal-flaw analysis to determine the feasibility of development in this area without raising base flood water surface elevations by more than one foot on the proposed project site. The results of this fatal-flaw analysis indicated that the majority of this area could be developed (except for the extreme northeastern corner) with resulting increases in water surface elevations significantly less than one foot on-site (and less than 0.1 foot off-site).

Based on the results of the fatal-flaw analysis, DLK Holdings, Inc. contracted with Cornerstone to develop a floodplain delineation study to identify the base flood elevations and resulting floodplain delineation under existing conditions and evaluate the changes to base flood elevations and floodplain delineation for the proposed development. The study would indicate the degree to which the proposed development could encroach upon the existing floodplain without resulting in increases in base flood elevations of more than one foot. In order to complete the floodplain delineation required for the MRLF proposed development, Cornerstone developed a hydraulic (HEC-RAS) model. The methodology used to develop this model is described in Section 3.2 of this report.

## 3.2 HEC-RAS Design Calculations and Results

The HEC-RAS model (version 4.0.0) developed by the U.S. Army Corps of Engineers (USACE) was utilized for the hydraulic modeling for this project. This model required data development/entry as geometric data, flow data and boundary conditions, and performing the hydraulic calculations. The following describes how information was developed for the HEC-RAS model.

### 3.2.1 Geometric Data

Geometric data consists of connectivity information for the stream system, cross-section data, and hydraulic structure data. A base map for the area of the MRLF was developed from

aerial topographic mapping by Cooper Aerial, as shown in Drawing SA3 located in Appendix A of this report. The cross-section data was determined from the base map, and entered into the model. Manning's n-values were based on Chow's *Open Channel Hydraulics* (1959, pp. 113) Manning's n-values for channels and floodplains with similar physical characteristics to those observed on-site and in aerial photographs of surrounding areas. HEC-RAS default contraction and expansion values (0.1 and 0.3, respectively) were also utilized. The Manning's roughness coefficients and bank stations used in the HEC-RAS model can be found in the HEC-RAS modeling results located in Appendix B of this report. Initially cross-section locations were provided at every 500-feet. During the analysis, cross sections were added at various locations to more effectively model localized changes in topography. Main channel bank station inputs were determined based on a review of aerial topography. Two separate models were set-up at this point, one for the existing conditions and one for the proposed development of the MRLF.

The proposed HEC-RAS model focused on grading the floodplain west of the existing low flow channel of the East Branch of the Brawley Wash to approximate the elevation and width of the low flow channel to reflect the proposed floodplain restoration. The proposed model also focused on identifying the position of the west bank of the channel, adjacent to the MRLF eastern property line, which would result in water surface elevations of no more than one foot above existing.

Given the known incoming 100-year peak flow rate of 21,000 cfs from the East Branch of the Brawley Wash watershed, an iterative process was used utilizing HEC-RAS output to size the proposed channel configuration to adequately provide flow capacity for the 21,000 cfs peak flow rate by maintaining water surface elevation surcharges less than one foot through the channel. While preserving the given floodplain depth, the proposed channel bottom width and position of its west bank were varied to maintain the existing conveyance on the west side of the channel. The proposed channel design allows for the proposed MRLF development to encroach upon the far western portions of the existing floodplain of the low flow channel while creating additional floodplain conveyance closer to the existing low flow channel. Channel side slopes were assumed to be 3H:1V. The top of the bank was determined based on the water surface elevation of the 100-year peak flow in the proposed conditions model. The elevation of the top of the bank is the proposed conditions 100-year peak flow water surface elevation at each cross section along the profile plus three feet of freeboard.

Manning's Equation was used to size the proposed diversion channels along the southern and western boundaries of the MRLF to direct overbank flows arriving along the site's southern boundary around the site. Given the known incoming overbank flows from the East Branch, previously determined from the CMG FLO-2D modeling, Manning's Equation was used to size a trapezoidal channel adequate to provide flow capacity for the overbank flows. By varying the channel bottom width, channel slopes, and depth of channel, the flow capacity of the channel was calculated and compared with the given flow rates determined in the CMG Drainage report. The sideslopes of each diversion channel will be 3H:1V. The Manning's roughness coefficients used with the Manning's Equation were based on Chow's *Open Channel Hydraulics* (1959, pp. 113) Manning's n-values for channels and floodplains with

similar physical characteristics to those observed on-site and in aerial photographs of surrounding areas. The Manning's roughness coefficient used for both diversion channels was 0.033, assuming an earthen bottom and rip-rapped/reno mattress lined sideslopes. The width of the east diversion channel bottom is 48 feet. The width of the south diversion channel varies from 15 to 20 feet as it travels along the southern and western boundries of the MRLF property. The depth of the east diversion channel is 4.8 feet. The depth of the south diversion channel varies from 5.2 to 5.9 feet as it travels along the southern and western boundries of the MRLF property. This channel sizing is shown on Sheet 12 of the Design Plan Drawings (these channels are also shown in plan view on Sheets 2 through 6 of the Design Plan Drawings). The Manning's Equation calculations can be found in Appendix B of this report. Further diversion channel design details will be reviewed and approved by the Town of Marana as the local floodplain administrator as part of the Development Plan process for the site.

### 3.2.2 Flow Data and Boundary Conditions

To comply with the requirements of RCRA Subtitle D (40 CFR §258), which requires proposed development to not significantly restrict the 100-year flow rate, a peak flow rate of 21,000 cfs was entered as a profile into the HEC-RAS model. By assuming 21,000 cfs is flowing through the East Branch of the Brawley Wash, this conservative assumption is modeling a worst case scenario, one which states that 21,000 cfs is flowing through both the East Branch and the West Branch of the Brawley Wash (see discussion of flow split hydrology/hydraulics in Section 2). A normal depth boundary condition was used and the channel profile slope was set at 0.003 feet per foot for the upstream boundary conditions. The location of the upstream boundary is far enough upstream of the landfill property that any differences between normal depth and actual depth at the upstream boundary of the model will be converged by the step-backwater methodology of the HEC-RAS model and will not result in significant changes in modeled depth at the MRLF property limits. A known water surface elevation of 1954 was given for the downstream boundary conditions based on the assigned water surface elevation for the most upstream cross-section in the Zone AE portion of the East Branch of Brawley Wash in the FEMA Flood Insurance Rate Map (FIRM) (near the confluence of the East Branch and West Branch). These boundary conditions were set for all profiles in the hydraulic model.

### 3.2.3 Hydraulic Calculations

A mixed flow (allowing both super- and sub-critical flow to occur within the model) regime was used to compute the steady flow analysis with a peak flow rate of 21,000 cfs for both the existing and proposed conditions models. As stated above, the proposed HEC-RAS model was set up to size the proposed channel configuration to adequately provide flow capacity for the 21,000 cfs peak flow rate by maintaining water surface elevation surcharges less than one foot through the channel. The proposed model incorporated the proposed channel width and west bank location as described in Section 3.2.1. Where breakout flow was predicted in the existing conditions model, the channel bottom width and location of the west bank were iteratively adjusted in order to maintain the existing conveyance on the west side of the low flow channel which would result in less than a one foot water surface elevation surcharge.

The proposed channel design allows for the proposed MRLF development to encroach upon the far western portions of the existing floodplain of the low flow channel while maintaining approximately equal conveyance between channel cross-sections in both the existing and proposed conditions models. Channel side slopes were assumed to be 3H:1V.

### 3.2.4 Results

#### 3.2.4.1 Hydrology

To comply with the requirements of RCRA Subtitle D (40 CFR §258), which requires proposed development to not significantly restrict the 100-year flow rate, the FEMA published peak flow rate of 21,000 cfs was entered as a profile into the HEC-RAS model. This resulted in similar surcharges to the water surface elevation (comparing existing and proposed geometries) all significantly less than one foot. The sensitivity of the hydraulic model to a range of flow rates was tested to show that the regulatory demonstration is not dependent on the precision of the hydrologic evaluation.

In addition to this HEC-RAS modeling effort performed to demonstrate compliance with 40 CFR §258.11, Cornerstone will be performing a 2-dimensional flow model using a more detailed model, FLO-2D, in conjunction with the Town of Marana Development Plan review. The modeling efforts are on-going and are paralleling the permitting process of the Solid Waste Facility Plan (SWFP). While Cornerstone's proposed conditions HEC-RAS models meet all of the RCRA Subtitle D (40 CFR §258) requirements, the Town of Marana is ultimately the primary regulator regarding hydrologic and hydraulic design for off-site flow conveyances. The Town of Marana has stricter guidelines pertaining to the off-site design and will be completing a more detailed review of the off-site drainage modeling efforts and report. The proposed MRLF development off-site drainage design will meet all of the Town of Marana's requirements.

#### 3.2.4.2 Hydraulics

Drawing SA4, located in Appendix A of this report, shows the location of the floodplain limits under existing conditions and the proposed conditions with the MRLF proposed site location. The placement of the left and right floodplain delineation limits, shown on Drawing SA4, were exported into AutoCAD from the HEC-RAS existing and proposed conditions modeling results. When comparing the existing conditions model to the proposed conditions model, the difference in water surface elevations ranges from -0.88 to 0.26 feet, which is below the FEMA criteria of one foot. The velocities in the proposed model ranged from 1.09 to 6.70 feet per second (fps), which is comparable to the existing conditions which ranged from 1.13 to 6.66 fps. Within the range of the landfill (STA 10+00 to STA 80+00), channel velocities (i.e., velocities anticipated to be experienced by the west bank or other protective structures for the landfill development) ranged from 2.27 to 6.28 fps. The HEC-RAS proposed and existing modeling results are shown in Appendix B of this report.

The results of the 100-year peak flow rate, at 21,000 cfs, proposed conditions run indicate that a floodplain could be defined as shown on Drawing SA4 located in Appendix A of this report, allowing development in the floodplain while maintaining surcharges in water surface elevations below the FEMA criteria of one foot. As discussed in Section 3.2.3, the delineation of this floodplain was developed by providing additional conveyance capacity in the proposed low flow channel and floodplain restoration that are within the floodplain limits identified in the existing conditions model. The channel bottom width and location of the west bank were adjusted incrementally in the proposed conditions model providing results that preserve the existing conveyance on the west side of the existing low flow channel in order to maintain surcharges at all cross-sections below one foot. The proposed channel design allows for the proposed MRLF development to encroach upon the far western portions of the existing floodplain of the low flow channel while maintaining approximately equal conveyance between channel cross-sections in both the existing and proposed conditions models.

### 3.2.5 Conclusions

Several conclusions can be drawn based on the results of the modeling described above. The proposed MRLF can be developed without increasing the water surface elevation in the East Branch of the Brawley Wash by more than one foot and will not restrict the flow of the 100-year flood. The largest increase in water surface elevation would be 0.26 feet at Station 80+00. Therefore, the results of the proposed modeling verify that the proposed channel geometry can be returned to more natural conditions (i.e., conditions similar to those that existed prior to the surrounding agricultural land development) without resulting in increases in water surface elevations. Basically, the proposed MRLF development would extend the existing single braided stream, dispersed flow with shallow, broad, partially vegetated flow conditions that occur north of the MRLF site through the proposed channel adjacent to the landfill.

The proposed conditions analysis indicates that it is possible to develop the MRLF without raising the water surface elevation more than one foot at any cross-section. The protected bank running along the eastern side of the proposed MRLF development was designed with an additional factor of safety by including three feet of freeboard above the determined proposed conditions 100-year peak flow water surface elevation. The HEC-RAS proposed conditions modeling results show that during extreme storm events (up to the 500-year flood event) the protected bank along the eastern side of the proposed MRLF will prevent flood waters from entering the landfill. Proposed activities along the protected bank will include maintenance of the protected bank and MRLF roadways parallel to the East Branch of the Brawley Wash.

It should be noted that the HEC-RAS proposed conditions analysis was based on a conservative assumption that a peak flow rate of 21,000 cfs flows through the East Branch of the Brawley Wash. As stated in Section 2.2 of this report, previous hydrologic studies have indicated that a peak flow rate of 14,000 cfs flows through the East Branch during the 100-year event within the Brawley Wash watershed. Cornerstone also modeled a peak flow rate

of 14,000 cfs flowing through the East Branch of the Brawley Wash as a profile into the HEC-RAS model. The results of the 14,000 cfs proposed conditions model showed that water surface elevations were not increased by more than one foot and 100-year peak flow velocities were not restricted. These results indicate that the requirements of 40 CFR §258 can be met regardless of which assumption (14,000 cfs or 21,000 cfs) is used for the 100-year event flow rate. Therefore, using the 100-year peak flow rate of 21,000 cfs in the initial HEC-RAS existing and proposed conditions models is a conservative modeling effort.

The results of this analysis indicate that the proposed development would have minimal impact on water surface elevations in the East Branch of the Brawley Wash. Therefore, the proposed development of the Marana Regional Landfill within a portion of the existing floodplain of the East Branch of the Brawley Wash can be accomplished in accordance with RCRA Subtitle D (40 CFR §258) requirements.

# LIMITATIONS

The services described in this report were performed consistent with generally accepted professional consulting principles and practices. No other warranty, express or implied, is made. These services were performed consistent with our agreement with our client. This report is solely for the use and information of our client unless otherwise noted. Any reliance on this report by a third party is at such party's sole risk.

Opinions and recommendations contained in this report apply to conditions existing when services were performed and are intended only for the client, purposes, locations, time frames, and project parameters indicated. We are not responsible for the impacts of any changes in environmental standards, practices, or regulations subsequent to performance of services. We do not warrant the accuracy of information supplied by others, nor the use of segregated portions of this report.

# REFERENCES

*Aguirre Peak Quadrangle Map*. Map. *United States Geological Service* (*USGS)*. 1979. 7.5 Minute Ser., 1:24,000 Scale. Photorevised, 1983.

*Amado Quadrangel Map*. Map. *USGS*. 1981. Print. 7.5 Minute Ser., 1:24,000 Scale

*Arivaca Quadrangle Map*. Map. *USGS*. 1979. Print. 7.5 Minute Ser., 1:24,000 Scale

*Avra Quadrangle Map*. Map. *USGS*. 1992. Print. 7.5 Minute Ser., 1:24,000 Scale

*Baboquivari Peak Quadrangle Map*. Map. *USGS*. 1979. Print. 7.5 Minute Ser., 1:24,000 Scale

*Bartlett Mountain Quadrangle Map*. Map. *USGS*. 7.5 Minute Ser., 1:24,000 Scale. Photoinspected, 1982.

*Batamote Hills Quadrangle Map*. Map. *USGS*. 1981. Print. 7.5 Minute Ser., 1:24,000 Scale

*Brown Mountain Quadrangle Map*. Map. *USGS*. 1992. Print. 7.5 Minute Ser., 1:24,000 Scale

*Caponera Peak Quadrangle Map*. Map. *USGS*. 7.5 Minute Ser., 1:24,000 Scale. Photoinspected, 1982.

*Cat Mountain Quadrangle Map*. Map. *USGS*. 1992. Print. 7.5 Minute Ser., 1:24,000 Scale

*Cerro Colorado Quadrangle Map*. Map. *USGS*. 7.5 Minute Ser., 1:24,000 Scale. Photoinspected, 1982.

Chow, Ven Te. *Open-Channel Hydraulics*. 1959. Print.

City of Tucson (COT). *Standards Manual for Drainage Design & Floodplain Management in Tucson, Arizona*. Prepared by Simons, Li & Associates. 1989. Print.

CMG Drainage Engineering, Inc. *Brawley Wash Drainage Study for the Proposed Marana Regional Landfill*. 2010. Print.

*Cocoraque Butte Quadrangle Map*. Map. *USGS*. 1996. Print. 7.5 Minute Ser., 1:24,000 Scale

*Cumero Mountain Quadrangle Map*. Map. *USGS*. 7.5 Minute Ser., 1:24,000 Scale. Photoinspected, 1982.

*Esperanza Mill Quadrangle Map*. Map. *USGS*. 1981. Print. 7.5 Minute Ser., 1:24,000 Scale

Federal Emergency Management Agency (FEMA). *Flood Insurance Study (FIS) for Pima County Arizona and Incorporated Areas*. 1999. Print.

Federal Emergency Management Agency (FEMA), 2007. *Map Service Center FIRMette* from www.msc.fema.gov. Portion of FEMA FIRM map 040099 0950 B, last revised December 15, 1983.

*Fresno Wash Quadrangle Map*. Map. *USGS*. 7.5 Minute Ser., 1:24,000 Scale. Photoinspected, 1982.

*Jaynes Quadrangle Map*. Map. *USGS*. 1992. Print. 7.5 Minute Ser., 1:24,000 Scale

*Kitt Peak Quadrangle Map*. Map. *USGS*. 7.5 Minute Ser., 1:24,000 Scale. Photoinspected, 1982.

*Las Guijas Quadrangle*. Map. *USGS*. 1979. 7.5 Minute Ser., 1:24,000 Scale. Photoinspected, 1983.

*La Tortuga Butte Quadrangle Map*. Map. *USGS*. 1996. Print. 7.5 Minute Ser., 1:24,000 Scale

*Marana Quadrangle Map*. Map. *USGS*. 1992. Print. 7.5 Minute Ser., 1:24,000 Scale

*Mildred Peak Quadrangle Map*. Map. *USGS*. 1979. Print. 7.5 Minute Ser., 1:24,000 Scale

*Murphy Peak Quadrangle Map*. Map. *USGS*. 1981. Print. 7.5 Minute Ser., 1:24,000 Scale

*Palo Alto Ranch Quadrangle Map*. Map. *USGS*. 1979. Print. 7.5 Minute Ser., 1:24,000 Scale

*Pan Tak Quadrangle Map*. Map. *USGS*. 1996. Print. 7.5 Minute Ser., 1:24,000 Scale

*Penitas Hills Quadrangle Map*. Map. *USGS*. 1979. Print. 7.5 Minute Ser., 1:24,000 Scale

*Presumido Peak Quadrangle*. Map. *USGS*. 1979. 7.5 Minute Ser., 1:24,000 Scale. Photoinspected, 1984.

*Ruby Quadrangle Map*. Map. *USGS*. 1981. Print. 7.5 Minute Ser., 1:24,000 Scale

*Ruelas Canyon Quadrangle Map*. Map. *USGS*. 1992. Print. 7.5 Minute Ser., 1:24,000 Scale

*Samaniego Peak Qudrangle Map*. Map. *USGS*. 1981. Print. 7.5 Minute Ser., 1:24,000 Scale

*San Pedro Qudrangle Map*. Map. *USGS*. 1979 Print. 7.5 Minute Ser., 1:24,000 Scale

*San Xavier Mission Qudrangle Map*. Map. *USGS*. 1992 Print. 7.5 Minute Ser., 1:24,000 Scale

*San Xavier SW Quadrangle*. Map. *USGS*. 1968. 7.5 Minute Ser., 1:24,000 Scale. Photoinspected, 1975.

*Saucito Mountain Qudrangle Map*. Map. *USGS*. 1981 Print. 7.5 Minute Ser., 1:24,000 Scale

*Silver Bell East Qudrangle Map*. Map. *USGS*. 1989. Print. 7.5 Minute Ser., 1:24,000 Scale

*Silver Bell West Qudrangle Map*. Map. *USGS*. 1989. Print. 7.5 Minute Ser., 1:24,000 Scale

Simmons, Li & Associates. *Brawley Wash Floodplain Study, PIMA County, Arizona (Flood Control District Activity Number 40BRAW)*. 1996. Print.

*Stevens MountaQuadrangle*. Map. *USGS*. 1979. 7.5 Minute Ser., 1:24,000 Scale. Photoinspected, 1982.

*Three Points Qudrangle Map*. Map. *USGS*. 1989. Print. 7.5 Minute Ser., 1:24,000 Scale

*Topographic Mapping of Marana Regional Landfill and Surrounding Areas*. Photograph. Cooper Aeiral, 2010. Print.

*Twin Buttes Qudrangle Map*. Map. *USGS*. 1981. Print. 7.5 Minute Ser., 1:24,000 Scale

US Army Corps of Engineers, 2008. Print. *HEC-RAS River Analysis System – User's Manual, Version 4.0*. Prepared by the Hydrologic Engineering Center.

*Waterman Peak Qudrangle Map*. Map. *USGS*. 1989. Print. 7.5 Minute Ser., 1:24,000 Scale

*West Of Avra Qudrangle Map*. Map. *USGS*. 1989. Print. 7.5 Minute Ser., 1:24,000 Scale

*West Of Marana Qudrangle Map*. Map. *USGS*. 1989. Print. 7.5 Minute Ser., 1:24,000 Scale

*Wilbur Canyon Qudrangle Map*. Map. *USGS*. 1980. 7.5 Minute Ser., 1:24,000 Scale. Photoinspected, 1982.

# APPENDIX A

# HYDRAULIC DESIGN CALCULATIONS

| | |
|---|---|
| Table SA1 | HEC-RAS Existing Conditions Modeling Results for 21,000 cfs |
| Table SA2 | Error Warnings and Notes for HEC-RAS Existing Conditions Modeling |
| Table SA3 | HEC-RAS Proposed Conditions Modeling Results for 21,000 cfs |
| Table SA4 | Error Warnings and Notes for HEC-RAS Proposed Conditions Modeling |
| Table SA5 | Difference in Water Surface Elevations Between Proposed and Existing Conditions |
| Table SA6 | Manning's Equation Calculations for Diversion Channels |

**TABLE SA1**

## MARANA REGIONAL LANDFILL: HEC-RAS EXISTING CONDITIONS MODELING RESULTS FOR 21,000 cfs

**HEC-RAS PLAN: ExistUpdFT21000 River: EB Brawley Wash Reach: DS AV ROAD Profile: PF 1**

| Reach | River Sta | Profile | Q Total (cfs) | Min Ch El (ft) | W.S. Elev (ft) | Crit W.S. (ft) | E.G. Elev (ft) | E.G. Slope (ft/ft) | Vel Chnl (ft/s) | Flow Area (sq ft) | Top Width (ft) | Froude # Chl | Mann Wtd Left | Mann Wtd Chnl | Mann Wtd Rght | Ch Sta L (ft) | Ch Sta R (ft) | Sta W.S. Lft (ft) | Sta W.S. Rgt (ft) |
|---|---|---|---|---|---|---|---|---|---|---|---|---|---|---|---|---|---|---|---|
| DS AV ROAD | 14000 | PF 1 | 21000 | 1993.7 | 1997.07 | 1995.62 | 1997.15 | 0.002069 | 2.85 | 11538.38 | 5799.43 | 0.29 | 0.08 | 0.05 | 0.07 | 8821 | 10046 | 932.36 | 11501.59 |
| DS AV ROAD | 13500 | PF 1 | 21000 | 1992 | 1994.16 | 1994.16 | 1994.68 | 0.021873 | 6.66 | 4690.42 | 5167.69 | 0.86 | 0.08 | 0.05 | 0.07 | 6643 | 7799 | 683.47 | 9074.12 |
| DS AV ROAD | 13000 | PF 1 | 21000 | 1988 | 1991.49 | 1990.29 | 1991.69 | 0.002186 | 3.92 | 7523.64 | 3901.84 | 0.41 | 0.08 | 0.035 | 0.07 | 6341 | 7954 | 3606.99 | 8503.07 |
| DS AV ROAD | 12500 | PF 1 | 21000 | 1984 | 1990.39 | | 1990.52 | 0.002445 | 3.76 | 8965.06 | 3476.53 | 0.33 | 0.08 | 0.05 | 0.038 | 8737 | 9168 | 5940.52 | 9837.82 |
| DS AV ROAD | 12000 | PF 1 | 21000 | 1984 | 1988.97 | | 1989.15 | 0.00306 | 4.14 | 8185.95 | 3168.43 | 0.36 | 0.08 | 0.05 | 0.038 | 9118 | 9289 | 6383.61 | 9794.97 |
| DS AV ROAD | 11500 | PF 1 | 21000 | 1982 | 1987.36 | | 1987.58 | 0.003228 | 4.76 | 6579.38 | 2875.28 | 0.39 | 0.058 | 0.05 | 0.035 | 9099 | 9514 | 6477.32 | 9752.5 |
| DS AV ROAD | 11400 | PF 1 | 21000 | 1982 | 1986.95 | | 1987.19 | 0.004659 | 4.71 | 5467.92 | 2634.57 | 0.44 | 0.049 | 0.05 | 0.035 | 9131 | 9618 | 6507.7 | 9718.6 |
| DS AV ROAD | 11000 | PF 1 | 21000 | 1982 | 1985.57 | | 1985.74 | 0.002825 | 2.9 | 6331.66 | 2880.73 | 0.31 | 0.04 | 0.052 | 0.035 | 9414 | 9551 | 6477.67 | 9564.62 |
| DS AV ROAD | 10500 | PF 1 | 21000 | 1978 | 1984.32 | | 1984.43 | 0.002395 | 3.22 | 7952.37 | 4403.66 | 0.3 | 0.045 | 0.052 | 0.025 | 8990 | 9073 | 3466.96 | 9091.41 |
| DS AV ROAD | 10000 | PF 1 | 21000 | 1976 | 1982.48 | | 1982.77 | 0.004754 | 5.94 | 5469.72 | 3698.54 | 0.46 | 0.045 | 0.052 | 0.025 | 5664 | 5834 | 668.26 | 6083.41 |
| DS AV ROAD | 9500 | PF 1 | 21000 | 1976 | 1980.79 | | 1980.96 | 0.002761 | 3.45 | 6314.52 | 3041.09 | 0.33 | 0.035 | 0.052 | 0.043 | 7721 | 8283 | 3815.29 | 8505.93 |
| DS AV ROAD | 9000 | PF 1 | 21000 | 1972 | 1979.25 | | 1979.46 | 0.00326 | 4.01 | 5836.6 | 3165.53 | 0.36 | 0.035 | 0.052 | 0.043 | 7740 | 8190 | 4061.41 | 8293.91 |
| DS AV ROAD | 8500 | PF 1 | 21000 | 1969.44 | 1977.65 | | 1977.86 | 0.00313 | 4.61 | 5837.54 | 3208.94 | 0.37 | 0.035 | 0.052 | 0.043 | 7783 | 8003 | 4465.34 | 8358.77 |
| DS AV ROAD | 8000 | PF 1 | 21000 | 1968 | 1976.09 | | 1976.29 | 0.003155 | 4.08 | 5987.03 | 3308.4 | 0.35 | 0.035 | 0.052 | 0.04 | 7792 | 8065 | 4869.59 | 8330.33 |
| DS AV ROAD | 7500 | PF 1 | 21000 | 1966 | 1974.43 | | 1974.62 | 0.003545 | 4.14 | 6234.34 | 3816.38 | 0.37 | 0.035 | 0.052 | 0.043 | 7857 | 8153 | 4544.45 | 8360.83 |
| DS AV ROAD | 7000 | PF 1 | 21000 | 1966 | 1972.81 | | 1972.98 | 0.00303 | 3.99 | 6429.55 | 3697.78 | 0.35 | 0.035 | 0.052 | 0.04 | 7784 | 8013 | 4560.42 | 8258.21 |
| DS AV ROAD | 6500 | PF 1 | 21000 | 1964 | 1971.19 | | 1971.38 | 0.003394 | 3.89 | 6149.79 | 3597.31 | 0.36 | 0.035 | 0.052 | 0.04 | 7802 | 8006 | 4653.48 | 8250.79 |
| DS AV ROAD | 6000 | PF 1 | 21000 | 1964 | 1969.88 | | 1970.02 | 0.002184 | 3.14 | 6959.54 | 3523.69 | 0.29 | 0.035 | 0.052 | 0.045 | 6718 | 6915 | 3752.41 | 7288.11 |
| DS AV ROAD | 5600 | PF 1 | 21000 | 1962 | 1968.94 | | 1969.1 | 0.002453 | 3.54 | 6703.08 | 3329.37 | 0.31 | 0.035 | 0.052 | 0.05 | 7019 | 7217 | 4289.64 | 7619.01 |
| DS AV ROAD | 5500 | PF 1 | 21000 | 1962 | 1968.68 | | 1968.84 | 0.002607 | 3.78 | 6562.5 | 3318.89 | 0.33 | 0.035 | 0.052 | 0.05 | 7001 | 7173 | 4317.04 | 7635.93 |
| DS AV ROAD | 5400 | PF 1 | 21000 | 1962 | 1968.42 | | 1968.59 | 0.002507 | 3.71 | 6564.27 | 3246.35 | 0.32 | 0.035 | 0.052 | 0.05 | 6984 | 7133 | 4333.85 | 7580.2 |
| DS AV ROAD | 5200 | PF 1 | 21000 | 1962 | 1967.43 | | 1967.82 | 0.006267 | 4.53 | 4311.72 | 2285.45 | 0.47 | 0.035 | 0.052 | 0.05 | 6954 | 7092 | 4829.86 | 7436.29 |
| DS AV ROAD | 5000 | PF 1 | 21000 | 1960 | 1966.63 | | 1966.85 | 0.003514 | 3.07 | 5851.16 | 2861.45 | 0.35 | 0.035 | 0.052 | 0.055 | 6456 | 7020 | 4491.63 | 7353.07 |
| DS AV ROAD | 4800 | PF 1 | 21000 | 1960 | 1965.93 | | 1966.17 | 0.003231 | 3.07 | 5624.14 | 2906.66 | 0.34 | 0.035 | 0.052 | 0.065 | 6703 | 6982 | 4362.73 | 7310.3 |
| DS AV ROAD | 4500 | PF 1 | 21000 | 1958 | 1965.07 | | 1965.27 | 0.002744 | 3.09 | 6041.08 | 2787.07 | 0.31 | 0.035 | 0.052 | 0.06 | 6789 | 6994 | 4524.5 | 7341.51 |
| DS AV ROAD | 4000 | PF 1 | 21000 | 1956 | 1963.47 | | 1963.73 | 0.003453 | 3.71 | 5332.62 | 2566.6 | 0.36 | 0.035 | 0.052 | 0.05 | 6853 | 7018 | 4761.13 | 7363.43 |
| DS AV ROAD | 3800 | PF 1 | 21000 | 1956 | 1962.79 | | 1963.04 | 0.00338 | 3.62 | 5350.92 | 2560.64 | 0.35 | 0.035 | 0.052 | 0.05 | 4052 | 4203 | 1989.6 | 4591.42 |
| DS AV ROAD | 3500 | PF 1 | 21000 | 1956 | 1961.87 | | 1962.08 | 0.002966 | 3.36 | 5880.57 | 2878.27 | 0.33 | 0.035 | 0.052 | 0.05 | 7549 | 7694 | 5379.51 | 8295.9 |
| DS AV ROAD | 3000 | PF 1 | 21000 | 1954 | 1960.31 | | 1960.52 | 0.003278 | 3.78 | 5966.19 | 3049.37 | 0.35 | 0.035 | 0.052 | 0.055 | 7399 | 7598 | 5165.12 | 8256.33 |
| DS AV ROAD | 2500 | PF 1 | 21000 | 1950 | 1958.93 | | 1959.1 | 0.002464 | 3.51 | 6663.38 | 2803.59 | 0.31 | 0.035 | 0.052 | 0.057 | 6364 | 6583 | 4679.57 | 7526.23 |
| DS AV ROAD | 2000 | PF 1 | 21000 | 1950 | 1957.25 | | 1957.47 | 0.00448 | 3.97 | 5838.89 | 2863.35 | 0.4 | 0.035 | 0.052 | 0.057 | 5322 | 5850 | 3973.69 | 6871.21 |
| DS AV ROAD | 1500 | PF 1 | 21000 | 1948 | 1955.16 | | 1955.35 | 0.004008 | 4.21 | 6147.78 | 2703.4 | 0.4 | 0.05 | 0.05 | 0.05 | 4375 | 4971 | 3471.99 | 6318.84 |
| DS AV ROAD | 1400 | PF 1 | 21000 | 1948 | 1954.82 | | 1954.98 | 0.003243 | 3.46 | 6678.04 | 2832.43 | 0.36 | 0.055 | 0.05 | 0.045 | 4295 | 5092 | 3490.62 | 6357.51 |
| DS AV ROAD | 1000 | PF 1 | 21000 | 1946 | 1954.31 | | 1954.38 | 0.000808 | 2.08 | 10446.13 | 3060.7 | 0.19 | 0.05 | 0.05 | 0.045 | 3662 | 4535 | 2778.66 | 5839.36 |
| DS AV ROAD | 800 | PF 1 | 21000 | 1946 | 1954.2 | | 1954.25 | 0.000512 | 1.83 | 12010.9 | 3099.1 | 0.15 | 0.05 | 0.05 | 0.045 | 3723 | 4592 | 2728.84 | 5827.94 |
| DS AV ROAD | 500 | PF 1 | 21000 | 1944 | 1954.1 | | 1954.14 | 0.000264 | 1.56 | 14493.33 | 3293.49 | 0.11 | 0.05 | 0.05 | 0.04 | 2942 | 3993 | 1793.78 | 5087.28 |
| DS AV ROAD | 400 | PF 1 | 21000 | 1944 | 1954.08 | | 1954.11 | 0.000219 | 1.47 | 15324.51 | 3292.19 | 0.1 | 0.05 | 0.05 | 0.04 | 2898 | 3979 | 1797.79 | 5089.98 |
| DS AV ROAD | 0 | PF 1 | 21000 | 1942 | 1954.02 | | 1954.04 | 0.000117 | 1.25 | 18602.98 | 3365.48 | 0.08 | 0.05 | 0.05 | 0.04 | 4441 | 5355 | 3163.98 | 6529.47 |
| DS AV ROAD | -250 | PF 1 | 21000 | 1942 | 1954 | 1947.67 | 1954.02 | 0.000088 | 1.13 | 20334.44 | 3327.58 | 0.07 | 0.05 | 0.05 | 0.04 | 1846 | 2753 | 545.55 | 3873.13 |

# Table SA2

Errors Warnings and Notes for Plan : ExistUpdFT21000

| | |
|---|---|
| Location: | River: EB Brawley Wash Reach: DS AV ROAD RS: 14000 Profile: PF 1 |
| Warning: | Divided flow computed for this cross-section. |
| Warning: | The cross-section end points had to be extended vertically for the computed water surface. |
| Warning: | The conveyance ratio (upstream conveyance divided by downstream conveyance) is less than 0.7 |
| | or greater than 1.4. This may indicate the need for additional cross sections. |
| Warning: | The energy loss was greater than 1.0 ft (0.3 m). between the current and previous cross section. |
| | This may indicate the need for additional cross sections. |
| Location: | River: EB Brawley Wash Reach: DS AV ROAD RS: 13500 Profile: PF 1 |
| Warning: | The energy equation could not be balanced within the specified number of iterations. The program |
| | used critical depth for the water surface and continued on with the calculations. |
| Warning: | Divided flow computed for this cross-section. |
| Warning: | The conveyance ratio (upstream conveyance divided by downstream conveyance) is less than 0.7 |
| | or greater than 1.4. This may indicate the need for additional cross sections. |
| Warning: | The energy loss was greater than 1.0 ft (0.3 m). between the current and previous cross section. |
| | This may indicate the need for additional cross sections. |
| Warning: | During the standard step iterations, when the assumed water surface was set equal to critical depth, |
| | the calculated water surface came back below critical depth. This indicates that there is not a valid |
| | subcritical answer. The program defaulted to critical depth. |
| Location: | River: EB Brawley Wash Reach: DS AV ROAD RS: 13000 Profile: PF 1 |
| Warning: | Divided flow computed for this cross-section. |
| Warning: | The energy loss was greater than 1.0 ft (0.3 m). between the current and previous cross section. |
| | This may indicate the need for additional cross sections. |
| Location: | River: EB Brawley Wash Reach: DS AV ROAD RS: 12500 Profile: PF 1 |
| Warning: | Divided flow computed for this cross-section. |
| Warning: | The energy loss was greater than 1.0 ft (0.3 m). between the current and previous cross section. |
| | This may indicate the need for additional cross sections. |
| Location: | River: EB Brawley Wash Reach: DS AV ROAD RS: 12000 Profile: PF 1 |
| Warning: | Divided flow computed for this cross-section. |
| Warning: | The energy loss was greater than 1.0 ft (0.3 m). between the current and previous cross section. |
| | This may indicate the need for additional cross sections. |
| Location: | River: EB Brawley Wash Reach: DS AV ROAD RS: 11500 Profile: PF 1 |
| Warning: | Divided flow computed for this cross-section. |
| Location: | River: EB Brawley Wash Reach: DS AV ROAD RS: 11400 Profile: PF 1 |
| Warning: | Divided flow computed for this cross-section. |
| Warning: | The energy loss was greater than 1.0 ft (0.3 m). between the current and previous cross section. |
| | This may indicate the need for additional cross sections. |
| Location: | River: EB Brawley Wash Reach: DS AV ROAD RS: 11000 Profile: PF 1 |
| Warning: | Divided flow computed for this cross-section. |
| Warning: | The energy loss was greater than 1.0 ft (0.3 m). between the current and previous cross section. |
| | This may indicate the need for additional cross sections. |
| Location: | River: EB Brawley Wash Reach: DS AV ROAD RS: 10500 Profile: PF 1 |
| Warning: | Divided flow computed for this cross-section. |
| Warning: | The conveyance ratio (upstream conveyance divided by downstream conveyance) is less than 0.7 |
| | or greater than 1.4. This may indicate the need for additional cross sections. |

Errors Warnings and Notes for Plan : ExistUpdFT21000 (Continued)

| | |
|---|---|
| Warning: | The energy loss was greater than 1.0 ft (0.3 m). between the current and previous cross section. |
| | This may indicate the need for additional cross sections. |
| Location: | River: EB Brawley Wash Reach: DS AV ROAD RS: 10000 Profile: PF 1 |
| Warning: | Divided flow computed for this cross-section. |
| Warning: | The energy loss was greater than 1.0 ft (0.3 m). between the current and previous cross section. |
| | This may indicate the need for additional cross sections. |
| Location: | River: EB Brawley Wash Reach: DS AV ROAD RS: 9500 Profile: PF 1 |
| Warning: | Divided flow computed for this cross-section. |
| Warning: | The energy loss was greater than 1.0 ft (0.3 m). between the current and previous cross section. |
| | This may indicate the need for additional cross sections. |
| Location: | River: EB Brawley Wash Reach: DS AV ROAD RS: 9000 Profile: PF 1 |
| Warning: | Divided flow computed for this cross-section. |
| Warning: | The energy loss was greater than 1.0 ft (0.3 m). between the current and previous cross section. |
| | This may indicate the need for additional cross sections. |
| Location: | River: EB Brawley Wash Reach: DS AV ROAD RS: 8500 Profile: PF 1 |
| Warning: | Divided flow computed for this cross-section. |
| Warning: | The energy loss was greater than 1.0 ft (0.3 m). between the current and previous cross section. |
| | This may indicate the need for additional cross sections. |
| Location: | River: EB Brawley Wash Reach: DS AV ROAD RS: 8000 Profile: PF 1 |
| Warning: | Divided flow computed for this cross-section. |
| Warning: | The energy loss was greater than 1.0 ft (0.3 m). between the current and previous cross section. |
| | This may indicate the need for additional cross sections. |
| Location: | River: EB Brawley Wash Reach: DS AV ROAD RS: 7500 Profile: PF 1 |
| Warning: | The energy loss was greater than 1.0 ft (0.3 m). between the current and previous cross section. |
| | This may indicate the need for additional cross sections. |
| Location: | River: EB Brawley Wash Reach: DS AV ROAD RS: 7000 Profile: PF 1 |
| Warning: | The energy loss was greater than 1.0 ft (0.3 m). between the current and previous cross section. |
| | This may indicate the need for additional cross sections. |
| Location: | River: EB Brawley Wash Reach: DS AV ROAD RS: 6500 Profile: PF 1 |
| Warning: | The energy loss was greater than 1.0 ft (0.3 m). between the current and previous cross section. |
| | This may indicate the need for additional cross sections. |
| Location: | River: EB Brawley Wash Reach: DS AV ROAD RS: 6000 Profile: PF 1 |
| Warning: | Divided flow computed for this cross-section. |
| Location: | River: EB Brawley Wash Reach: DS AV ROAD RS: 5400 Profile: PF 1 |
| Warning: | The conveyance ratio (upstream conveyance divided by downstream conveyance) is less than 0.7 |
| | or greater than 1.4. This may indicate the need for additional cross sections. |
| Location: | River: EB Brawley Wash Reach: DS AV ROAD RS: 5200 Profile: PF 1 |
| Warning: | Divided flow computed for this cross-section. |
| Location: | River: EB Brawley Wash Reach: DS AV ROAD RS: 4800 Profile: PF 1 |
| Warning: | Divided flow computed for this cross-section. |
| Location: | River: EB Brawley Wash Reach: DS AV ROAD RS: 4500 Profile: PF 1 |
| Warning: | Divided flow computed for this cross-section. |
| Warning: | The energy loss was greater than 1.0 ft (0.3 m). between the current and previous cross section. |
| | This may indicate the need for additional cross sections. |

Errors Warnings and Notes for Plan : ExistUpdFT21000 (Continued)

| | |
|---|---|
| Location: | River: EB Brawley Wash Reach: DS AV ROAD RS: 4000 Profile: PF 1 |
| Warning: | Divided flow computed for this cross-section. |
| Location: | River: EB Brawley Wash Reach: DS AV ROAD RS: 3800 Profile: PF 1 |
| Warning: | Divided flow computed for this cross-section. |
| Location: | River: EB Brawley Wash Reach: DS AV ROAD RS: 3500 Profile: PF 1 |
| Warning: | Divided flow computed for this cross-section. |
| Warning: | The energy loss was greater than 1.0 ft (0.3 m). between the current and previous cross section. |
| | This may indicate the need for additional cross sections. |
| Location: | River: EB Brawley Wash Reach: DS AV ROAD RS: 3000 Profile: PF 1 |
| Warning: | Divided flow computed for this cross-section. |
| Warning: | The energy loss was greater than 1.0 ft (0.3 m). between the current and previous cross section. |
| | This may indicate the need for additional cross sections. |
| Location: | River: EB Brawley Wash Reach: DS AV ROAD RS: 2500 Profile: PF 1 |
| Warning: | Divided flow computed for this cross-section. |
| Warning: | The energy loss was greater than 1.0 ft (0.3 m). between the current and previous cross section. |
| | This may indicate the need for additional cross sections. |
| Location: | River: EB Brawley Wash Reach: DS AV ROAD RS: 2000 Profile: PF 1 |
| Warning: | Divided flow computed for this cross-section. |
| Warning: | The energy loss was greater than 1.0 ft (0.3 m). between the current and previous cross section. |
| | This may indicate the need for additional cross sections. |
| Location: | River: EB Brawley Wash Reach: DS AV ROAD RS: 1500 Profile: PF 1 |
| Warning: | Divided flow computed for this cross-section. |
| Location: | River: EB Brawley Wash Reach: DS AV ROAD RS: 1400 Profile: PF 1 |
| Warning: | Divided flow computed for this cross-section. |
| Warning: | The conveyance ratio (upstream conveyance divided by downstream conveyance) is less than 0.7 |
| | or greater than 1.4. This may indicate the need for additional cross sections. |
| Location: | River: EB Brawley Wash Reach: DS AV ROAD RS: -250 Profile: PF 1 |
| Warning: | The parabolic search method failed to converge on critical depth. The program will try the cross |
| | section slice/secant method to find critical depth. |

**TABLE SA3**

## MARANA REGIONAL LANDFILL: HEC-RAS PROPOSED CONDITIONS MODELING RESULTS FOR 21,000 cfs

**HEC-RAS PLAN: 21kFEMATopoREV1 River: EB Brawley Wash Reach: DS AV ROAD Profile: PF 1**

| Reach | River Sta | Profile | Q Total (cfs) | Min Ch El (ft) | W.S. Elev (ft) | Crit W.S. (ft) | E.G. Elev (ft) | E.G. Slope (ft/ft) | Vel Chnl (ft/s) | Flow Area (sq ft) | Top Width (ft) | Froude # Chl | Mann Wtd Left | Mann Wtd Chnl | Mann Wtd Rght | Ch Sta L (ft) | Ch Sta R (ft) | Sta W.S. Lft (ft) | Sta W.S. Rgt (ft) |
|---|---|---|---|---|---|---|---|---|---|---|---|---|---|---|---|---|---|---|---|
| DS AV ROAD | 14000 | PF 1 | 21000 | 1993.7 | 1997.08 | 1995.78 | 1997.15 | 0.002052 | 2.84 | 11570.95 | 5799.64 | 0.29 | 0.08 | 0.05 | 0.07 | 8820.16 | 10046 | 932.35 | 11501.59 |
| DS AV ROAD | 13500 | PF 1 | 21000 | 1992 | 1994.14 | 1994.14 | 1994.66 | 0.023796 | 6.7 | 4597.79 | 5167.3 | 0.89 | 0.08 | 0.05 | 0.07 | 6643 | 7799 | 768.66 | 9161.54 |
| DS AV ROAD | 13000 | PF 1 | 21000 | 1988 | 1991.45 | 1990.29 | 1991.66 | 0.002299 | 3.98 | 7373.47 | 3861.94 | 0.42 | 0.08 | 0.035 | 0.07 | 6341 | 7954 | 3607.24 | 8488.8 |
| DS AV ROAD | 12500 | PF 1 | 21000 | 1984.09 | 1990.35 | | 1990.48 | 0.00233 | 3.52 | 8821.92 | 3446.96 | 0.32 | 0.08 | 0.05 | 0.038 | 8737 | 9168 | 6041.04 | 9933.93 |
| DS AV ROAD | 12000 | PF 1 | 21000 | 1984 | 1988.97 | | 1989.15 | 0.00306 | 4.14 | 8185.56 | 3168.4 | 0.36 | 0.08 | 0.05 | 0.038 | 9118 | 9289 | 6383.61 | 9794.97 |
| DS AV ROAD | 11500 | PF 1 | 21000 | 1982 | 1987.36 | | 1987.58 | 0.003227 | 4.76 | 6580.79 | 2875.41 | 0.39 | 0.058 | 0.05 | 0.035 | 9099 | 9514 | 6477.32 | 9752.53 |
| DS AV ROAD | 11400 | PF 1 | 21000 | 1982 | 1986.95 | | 1987.19 | 0.004654 | 4.71 | 5470.17 | 2635.01 | 0.44 | 0.049 | 0.05 | 0.035 | 9131 | 9618 | 6507.69 | 9718.64 |
| DS AV ROAD | 11000 | PF 1 | 21000 | 1982 | 1985.57 | | 1985.74 | 0.002848 | 2.91 | 6315.13 | 2879.97 | 0.32 | 0.04 | 0.052 | 0.035 | 9414 | 9551 | 6477.75 | 9564.5 |
| DS AV ROAD | 10500 | PF 1 | 21000 | 1978 | 1984.27 | | 1984.43 | 0.002404 | 2.02 | 7752.07 | 4397.78 | 0.27 | 0.045 | 0.052 | 0.025 | 8990 | 9073 | 3501.35 | 9125.39 |
| DS AV ROAD | 10000 | PF 1 | 21000 | 1976 | 1982.48 | | 1982.77 | 0.004765 | 5.83 | 5469.73 | 3698.54 | 0.45 | 0.045 | 0.052 | 0.025 | 5664 | 5834 | 676.74 | 6091.89 |
| DS AV ROAD | 9500 | PF 1 | 21000 | 1976 | 1980.79 | | 1980.96 | 0.002739 | 3.44 | 6331.6 | 3043.95 | 0.32 | 0.035 | 0.052 | 0.043 | 7721 | 8283 | 3815.27 | 8506.05 |
| DS AV ROAD | 9000 | PF 1 | 21000 | 1972 | 1979.23 | | 1979.44 | 0.003401 | 4.07 | 5750.57 | 3157.28 | 0.37 | 0.035 | 0.052 | 0.043 | 7740 | 8190 | 4061.53 | 8292.83 |
| DS AV ROAD | 8500 | PF 1 | 21000 | 1969.4 | 1977.8 | | 1977.98 | 0.002494 | 4.2 | 6359.69 | 3363.9 | 0.33 | 0.035 | 0.052 | 0.043 | 7783 | 8003 | 4464.67 | 8368.62 |
| DS AV ROAD | 8000 | PF 1 | 21000 | 1968 | 1976.35 | 1975.09 | 1976.48 | 0.003597 | 2.93 | 7126.3 | 3413.06 | 0.35 | 0.035 | 0.05 | 0.04 | 4826 | 8065 | 4852.98 | 8358.25 |
| DS AV ROAD | 7500 | PF 1 | 21000 | 1966 | 1974.61 | 1973.37 | 1974.75 | 0.003362 | 2.98 | 7066.52 | 3557.07 | 0.35 | 0.035 | 0.05 | 0.043 | 5147 | 8153 | 3967.81 | 8367.36 |
| DS AV ROAD | 7000 | PF 1 | 21000 | 1966 | 1972.91 | 1971.68 | 1973.06 | 0.003377 | 3.08 | 6759.41 | 2967.27 | 0.35 | 0.035 | 0.05 | 0.04 | 5336 | 8013 | 4787.85 | 8261.26 |
| DS AV ROAD | 6500 | PF 1 | 21000 | 1964 | 1971.3 | 1969.94 | 1971.45 | 0.003076 | 3.17 | 6672.75 | 2787.22 | 0.35 | 0.035 | 0.049 | 0.04 | 5560 | 8006 | 5426.67 | 8257.06 |
| DS AV ROAD | 6000 | PF 1 | 21000 | 1964 | 1969.67 | | 1969.85 | 0.00331 | 3.48 | 6188.06 | 2408.69 | 0.37 | 0.035 | 0.048 | 0.045 | 4823 | 6915 | 4849.55 | 7273.88 |
| DS AV ROAD | 5600 | PF 1 | 21000 | 1962 | 1968.46 | | 1968.65 | 0.002773 | 3.55 | 6160.86 | 2084.04 | 0.35 | 0.035 | 0.048 | 0.05 | 5487 | 7217 | 5512.26 | 7596.3 |
| DS AV ROAD | 5500 | PF 1 | 21000 | 1962 | 1968.15 | | 1968.36 | 0.00296 | 3.7 | 5946.25 | 2043.13 | 0.36 | 0.035 | 0.048 | 0.05 | 5539 | 7173 | 5564.66 | 7607.79 |
| DS AV ROAD | 5400 | PF 1 | 21000 | 1962 | 1967.79 | | 1968.03 | 0.00348 | 4.03 | 5463.91 | 1896.32 | 0.39 | 0.035 | 0.048 | 0.05 | 5593 | 7133 | 5620.78 | 7528.59 |
| DS AV ROAD | 5200 | PF 1 | 21000 | 1961.4 | 1966.75 | | 1967.12 | 0.005995 | 4.96 | 4412.71 | 1652.93 | 0.51 | 0.035 | 0.048 | 0.05 | 5718 | 7092 | 5739.51 | 7392.44 |
| DS AV ROAD | 5000 | PF 1 | 21000 | 1960 | 1965.81 | | 1966.16 | 0.003914 | 4.8 | 4570.12 | 1364.77 | 0.43 | 0.035 | 0.047 | 0.055 | 5848 | 7020 | 5870.23 | 7276.35 |
| DS AV ROAD | 4800 | PF 1 | 21000 | 1959.4 | 1965.05 | | 1965.43 | 0.003373 | 4.93 | 4425.84 | 1220.6 | 0.42 | 0.035 | 0.047 | 0.065 | 5997 | 6982 | 6016.64 | 7237.24 |
| DS AV ROAD | 4500 | PF 1 | 21000 | 1958 | 1964.3 | | 1964.66 | 0.00199 | 4.88 | 4565.7 | 1026.94 | 0.37 | 0.035 | 0.042 | 0.06 | 6210 | 6994 | 6234.69 | 7261.64 |
| DS AV ROAD | 4000 | PF 1 | 21000 | 1957 | 1962.83 | | 1963.42 | 0.003064 | 6.19 | 3534.68 | 901.32 | 0.48 | 0.035 | 0.04 | 0.05 | 6948 | 7603 | 6962.67 | 7863.99 |
| DS AV ROAD | 3800 | PF 1 | 21000 | 1956.5 | 1962.19 | | 1962.79 | 0.003159 | 6.28 | 3537.88 | 993.12 | 0.48 | 0.035 | 0.04 | 0.05 | 3553 | 4203 | 3572.85 | 4565.97 |
| DS AV ROAD | 3500 | PF 1 | 21000 | 1956 | 1961.39 | | 1961.87 | 0.00275 | 5.72 | 4072.93 | 1220.96 | 0.45 | 0.035 | 0.04 | 0.05 | 6976 | 7694 | 6998.59 | 8219.56 |
| DS AV ROAD | 3000 | PF 1 | 21000 | 1954 | 1960.24 | | 1960.54 | 0.00238 | 4.59 | 5175.59 | 1505.72 | 0.36 | 0.035 | 0.046 | 0.055 | 6727 | 7598 | 6747.08 | 8252.79 |
| DS AV ROAD | 2500 | PF 1 | 21000 | 1950 | 1958.95 | | 1959.23 | 0.002855 | 4.72 | 5511.59 | 1621.99 | 0.38 | 0.035 | 0.048 | 0.057 | 5885 | 6583 | 5905.43 | 7527.42 |
| DS AV ROAD | 2000 | PF 1 | 21000 | 1950 | 1957.15 | | 1957.46 | 0.004505 | 4.95 | 5124.45 | 1844.32 | 0.44 | 0.035 | 0.05 | 0.057 | 4999 | 5850 | 5022.19 | 6866.51 |
| DS AV ROAD | 1500 | PF 1 | 21000 | 1948 | 1955.31 | 1953.88 | 1955.52 | 0.003277 | 4.18 | 5871.32 | 2824.1 | 0.37 | 0.05 | 0.05 | 0.05 | 4307 | 4971 | 3278.45 | 6326.84 |
| DS AV ROAD | 1400 | PF 1 | 21000 | 1948 | 1954.9 | 1953.69 | 1955.14 | 0.004335 | 4.07 | 5273.84 | 2861.52 | 0.41 | 0.055 | 0.05 | 0.045 | 4238 | 5092 | 3374.96 | 6362.53 |
| DS AV ROAD | 1000 | PF 1 | 21000 | 1946 | 1954.31 | 1951.76 | 1954.39 | 0.00094 | 2.27 | 9273.31 | 2937.83 | 0.2 | 0.05 | 0.05 | 0.045 | 3268 | 4535 | 2778.81 | 5838.44 |
| DS AV ROAD | 800 | PF 1 | 21000 | 1946 | 1954.2 | | 1954.25 | 0.000512 | 1.83 | 12009.67 | 3097.91 | 0.15 | 0.05 | 0.05 | 0.045 | 3723 | 4592 | 2730.01 | 5827.92 |
| DS AV ROAD | 500 | PF 1 | 21000 | 1944 | 1954.1 | | 1954.14 | 0.000264 | 1.56 | 14493.33 | 3293.49 | 0.11 | 0.05 | 0.05 | 0.04 | 2942 | 3993 | 1793.78 | 5087.28 |
| DS AV ROAD | 400 | PF 1 | 21000 | 1944 | 1954.08 | | 1954.11 | 0.000219 | 1.47 | 15324.51 | 3292.19 | 0.1 | 0.05 | 0.05 | 0.04 | 2898 | 3979 | 1797.79 | 5089.98 |
| DS AV ROAD | 0 | PF 1 | 21000 | 1942 | 1954.02 | | 1954.04 | 0.000117 | 1.25 | 18602.98 | 3365.48 | 0.08 | 0.05 | 0.05 | 0.04 | 4441 | 5355 | 3163.98 | 6529.47 |
| DS AV ROAD | -250 | PF 1 | 21000 | 1942 | 1954 | 1947.67 | 1954.02 | 0.000088 | 1.13 | 20334.44 | 3327.58 | 0.07 | 0.05 | 0.05 | 0.04 | 1846 | 2753 | 545.55 | 3873.13 |

# Table SA4

Errors Warnings and Notes for Plan : 21kFEMATopoREV1

| | |
|---|---|
| Location: | River: EB Brawley Wash Reach: DS AV ROAD RS: 14000 Profile: PF 1 |
| Warning: | Divided flow computed for this cross-section. |
| Warning: | The cross-section end points had to be extended vertically for the computed water surface. |
| Warning: | The conveyance ratio (upstream conveyance divided by downstream conveyance) is less than 0.7 |
| | or greater than 1.4. This may indicate the need for additional cross sections. |
| Warning: | The energy loss was greater than 1.0 ft (0.3 m). between the current and previous cross section. |
| | This may indicate the need for additional cross sections. |
| Location: | River: EB Brawley Wash Reach: DS AV ROAD RS: 13500 Profile: PF 1 |
| Warning: | The energy equation could not be balanced within the specified number of iterations. The program |
| | used critical depth for the water surface and continued on with the calculations. |
| Warning: | Divided flow computed for this cross-section. |
| Warning: | The conveyance ratio (upstream conveyance divided by downstream conveyance) is less than 0.7 |
| | or greater than 1.4. This may indicate the need for additional cross sections. |
| Warning: | The energy loss was greater than 1.0 ft (0.3 m). between the current and previous cross section. |
| | This may indicate the need for additional cross sections. |
| Warning: | During the standard step iterations, when the assumed water surface was set equal to critical depth, |
| | the calculated water surface came back below critical depth. This indicates that there is not a valid |
| | subcritical answer. The program defaulted to critical depth. |
| Location: | River: EB Brawley Wash Reach: DS AV ROAD RS: 13000 Profile: PF 1 |
| Warning: | Divided flow computed for this cross-section. |
| Warning: | The energy loss was greater than 1.0 ft (0.3 m). between the current and previous cross section. |
| | This may indicate the need for additional cross sections. |
| Location: | River: EB Brawley Wash Reach: DS AV ROAD RS: 12500 Profile: PF 1 |
| Warning: | Divided flow computed for this cross-section. |
| Warning: | The energy loss was greater than 1.0 ft (0.3 m). between the current and previous cross section. |
| | This may indicate the need for additional cross sections. |
| Location: | River: EB Brawley Wash Reach: DS AV ROAD RS: 12000 Profile: PF 1 |
| Warning: | Divided flow computed for this cross-section. |
| Warning: | The energy loss was greater than 1.0 ft (0.3 m). between the current and previous cross section. |
| | This may indicate the need for additional cross sections. |
| Location: | River: EB Brawley Wash Reach: DS AV ROAD RS: 11500 Profile: PF 1 |
| Warning: | Divided flow computed for this cross-section. |
| Location: | River: EB Brawley Wash Reach: DS AV ROAD RS: 11400 Profile: PF 1 |
| Warning: | Divided flow computed for this cross-section. |
| Warning: | The energy loss was greater than 1.0 ft (0.3 m). between the current and previous cross section. |
| | This may indicate the need for additional cross sections. |
| Location: | River: EB Brawley Wash Reach: DS AV ROAD RS: 11000 Profile: PF 1 |
| Warning: | Divided flow computed for this cross-section. |
| Warning: | The energy loss was greater than 1.0 ft (0.3 m). between the current and previous cross section. |
| | This may indicate the need for additional cross sections. |
| Location: | River: EB Brawley Wash Reach: DS AV ROAD RS: 10500 Profile: PF 1 |
| Warning: | Divided flow computed for this cross-section. |
| Warning: | The conveyance ratio (upstream conveyance divided by downstream conveyance) is less than 0.7 |
| | or greater than 1.4. This may indicate the need for additional cross sections. |

Errors Warnings and Notes for Plan : ExistUpdFT21000 (Continued)

| | |
|---|---|
| Warning: | The energy loss was greater than 1.0 ft (0.3 m). between the current and previous cross section. |
| | This may indicate the need for additional cross sections. |
| Location: | River: EB Brawley Wash Reach: DS AV ROAD RS: 10000 Profile: PF 1 |
| Warning: | Divided flow computed for this cross-section. |
| Warning: | The energy loss was greater than 1.0 ft (0.3 m). between the current and previous cross section. |
| | This may indicate the need for additional cross sections. |
| Location: | River: EB Brawley Wash Reach: DS AV ROAD RS: 9500 Profile: PF 1 |
| Warning: | Divided flow computed for this cross-section. |
| Warning: | The energy loss was greater than 1.0 ft (0.3 m). between the current and previous cross section. |
| | This may indicate the need for additional cross sections. |
| Location: | River: EB Brawley Wash Reach: DS AV ROAD RS: 9000 Profile: PF 1 |
| Warning: | Divided flow computed for this cross-section. |
| Warning: | The energy loss was greater than 1.0 ft (0.3 m). between the current and previous cross section. |
| | This may indicate the need for additional cross sections. |
| Location: | River: EB Brawley Wash Reach: DS AV ROAD RS: 8500 Profile: PF 1 |
| Warning: | Divided flow computed for this cross-section. |
| Warning: | The energy loss was greater than 1.0 ft (0.3 m). between the current and previous cross section. |
| | This may indicate the need for additional cross sections. |
| Location: | River: EB Brawley Wash Reach: DS AV ROAD RS: 8000 Profile: PF 1 |
| Warning: | Divided flow computed for this cross-section. |
| Warning: | The energy loss was greater than 1.0 ft (0.3 m). between the current and previous cross section. |
| | This may indicate the need for additional cross sections. |
| Location: | River: EB Brawley Wash Reach: DS AV ROAD RS: 7500 Profile: PF 1 |
| Warning: | The energy loss was greater than 1.0 ft (0.3 m). between the current and previous cross section. |
| | This may indicate the need for additional cross sections. |
| Location: | River: EB Brawley Wash Reach: DS AV ROAD RS: 7000 Profile: PF 1 |
| Warning: | The energy loss was greater than 1.0 ft (0.3 m). between the current and previous cross section. |
| | This may indicate the need for additional cross sections. |
| Location: | River: EB Brawley Wash Reach: DS AV ROAD RS: 6500 Profile: PF 1 |
| Warning: | The energy loss was greater than 1.0 ft (0.3 m). between the current and previous cross section. |
| | This may indicate the need for additional cross sections. |
| Location: | River: EB Brawley Wash Reach: DS AV ROAD RS: 6000 Profile: PF 1 |
| Warning: | Divided flow computed for this cross-section. |
| Location: | River: EB Brawley Wash Reach: DS AV ROAD RS: 5400 Profile: PF 1 |
| Warning: | The conveyance ratio (upstream conveyance divided by downstream conveyance) is less than 0.7 |
| | or greater than 1.4. This may indicate the need for additional cross sections. |
| Location: | River: EB Brawley Wash Reach: DS AV ROAD RS: 5200 Profile: PF 1 |
| Warning: | Divided flow computed for this cross-section. |
| Location: | River: EB Brawley Wash Reach: DS AV ROAD RS: 4800 Profile: PF 1 |
| Warning: | Divided flow computed for this cross-section. |
| Location: | River: EB Brawley Wash Reach: DS AV ROAD RS: 4500 Profile: PF 1 |
| Warning: | Divided flow computed for this cross-section. |
| Warning: | The energy loss was greater than 1.0 ft (0.3 m). between the current and previous cross section. |
| | This may indicate the need for additional cross sections. |

Errors Warnings and Notes for Plan : ExistUpdFT21000 (Continued)

| | |
|---|---|
| Location: | River: EB Brawley Wash Reach: DS AV ROAD RS: 4000 Profile: PF 1 |
| Warning: | Divided flow computed for this cross-section. |
| Location: | River: EB Brawley Wash Reach: DS AV ROAD RS: 3800 Profile: PF 1 |
| Warning: | Divided flow computed for this cross-section. |
| Location: | River: EB Brawley Wash Reach: DS AV ROAD RS: 3500 Profile: PF 1 |
| Warning: | Divided flow computed for this cross-section. |
| Warning: | The energy loss was greater than 1.0 ft (0.3 m). between the current and previous cross section. |
| | This may indicate the need for additional cross sections. |
| Location: | River: EB Brawley Wash Reach: DS AV ROAD RS: 3000 Profile: PF 1 |
| Warning: | Divided flow computed for this cross-section. |
| Warning: | The energy loss was greater than 1.0 ft (0.3 m). between the current and previous cross section. |
| | This may indicate the need for additional cross sections. |
| Location: | River: EB Brawley Wash Reach: DS AV ROAD RS: 2500 Profile: PF 1 |
| Warning: | Divided flow computed for this cross-section. |
| Warning: | The energy loss was greater than 1.0 ft (0.3 m). between the current and previous cross section. |
| | This may indicate the need for additional cross sections. |
| Location: | River: EB Brawley Wash Reach: DS AV ROAD RS: 2000 Profile: PF 1 |
| Warning: | Divided flow computed for this cross-section. |
| Warning: | The energy loss was greater than 1.0 ft (0.3 m). between the current and previous cross section. |
| | This may indicate the need for additional cross sections. |
| Location: | River: EB Brawley Wash Reach: DS AV ROAD RS: 1500 Profile: PF 1 |
| Warning: | Divided flow computed for this cross-section. |
| Location: | River: EB Brawley Wash Reach: DS AV ROAD RS: 1400 Profile: PF 1 |
| Warning: | Divided flow computed for this cross-section. |
| Warning: | The conveyance ratio (upstream conveyance divided by downstream conveyance) is less than 0.7 |
| | or greater than 1.4. This may indicate the need for additional cross sections. |
| Location: | River: EB Brawley Wash Reach: DS AV ROAD RS: -250 Profile: PF 1 |
| Warning: | The parabolic search method failed to converge on critical depth. The program will try the cross |
| | section slice/secant method to find critical depth. |

**TABLE SA5**
**MARANA REGIONAL LANDFILL: HEC-RAS MODELING RESULTS FOR 21,000 cfs**

**DIFFERENCE IN WATER SURFACE ELEVATIONS BETWEEN PROPOSED AND EXISTING CONDITIONS**

**HEC-RAS PLAN: 21kFEMATopoREV1 (Proposed)** **River: EB Brawley Wash**
**HEC-RAS PLAN: ExistUpdFT21000 (Existing)** **Reach: DS AV ROAD** **Profile: PF 1**

| River Sta | PROPOSED UPDATED FEMA TOPO REV1 WATER SURFACE ELEVATION (FT.) | EXISTING UPDATED FEMA TOPO WATER SURFACE ELEVATION (FT.) | CHANGE IN WATER SURFACE ELEVATION (FT.) |
|---|---|---|---|
| 14000 | 1997.08 | 1997.07 | 0.01 |
| 13500 | 1994.14 | 1994.16 | -0.02 |
| 13000 | 1991.45 | 1991.49 | -0.04 |
| 12500 | 1990.35 | 1990.39 | -0.04 |
| 12000 | 1988.97 | 1988.97 | 0 |
| 11500 | 1987.36 | 1987.36 | 0 |
| 11400 | 1986.95 | 1986.95 | 0 |
| 11000 | 1985.57 | 1985.57 | 0 |
| 10500 | 1984.27 | 1984.32 | -0.05 |
| 10000 | 1982.48 | 1982.48 | 0 |
| 9500 | 1980.79 | 1980.79 | 0 |
| 9000 | 1979.23 | 1979.25 | -0.02 |
| 8500 | 1977.8 | 1977.65 | 0.15 |
| 8000 | 1976.35 | 1976.09 | 0.26 |
| 7500 | 1974.61 | 1974.43 | 0.18 |
| 7000 | 1972.91 | 1972.81 | 0.1 |
| 6500 | 1971.3 | 1971.19 | 0.11 |
| 6000 | 1969.67 | 1969.88 | -0.21 |
| 5600 | 1968.46 | 1968.94 | -0.48 |
| 5500 | 1968.15 | 1968.68 | -0.53 |
| 5400 | 1967.79 | 1968.42 | -0.63 |
| 5200 | 1966.75 | 1967.43 | -0.68 |
| 5000 | 1965.81 | 1966.63 | -0.82 |
| 4800 | 1965.05 | 1965.93 | -0.88 |
| 4500 | 1964.3 | 1965.07 | -0.77 |
| 4000 | 1962.83 | 1963.47 | -0.64 |
| 3800 | 1962.19 | 1962.79 | -0.6 |
| 3500 | 1961.39 | 1961.87 | -0.48 |
| 3000 | 1960.24 | 1960.31 | -0.07 |
| 2500 | 1958.95 | 1958.93 | 0.02 |
| 2000 | 1957.15 | 1957.25 | -0.1 |
| 1500 | 1955.31 | 1955.16 | 0.15 |
| 1400 | 1954.89 | 1954.82 | 0.07 |
| 1000 | 1954.31 | 1954.31 | 0 |
| 800 | 1954.19 | 1954.2 | -0.01 |
| 500 | 1954.1 | 1954.1 | 0 |
| 400 | 1954.07 | 1954.08 | -0.01 |
| 0 | 1954.02 | 1954.02 | 0 |
| -250 | 1954 | 1954 | 0 |

Table SA6

## Mannings Equation Calculator for Trapezoidal Channels with known Q

**Project Name:** MARANA REGIONAL LANDFILL
**Project Number:** 90250
**Desciption:** South Offsite Channel Sizing

Prepared by: CEB
Date: April 13, 2011
Checked by: GRB
Date: May 3, 2011

(Note: Triangular Channels are a special case with bottom width = 0)
(Note: For rectangular channels enter negative number for sideslopes)

Where: Q = Flow Rate (cfs) b = Channel Bottom Width (ft)
n= Manning's n $V_{p100}$ = Peak Velocity for 100-yr Event
A = Flow Area ($ft^2$) $Y_{p100}$ = Peak Flow Depth for 100-yr Event
R = Hydraulic Radius (ft)
So = Sf = Bed Slope (ft/ft)

**100 YR**

Enter Data in Blue Text Cells

| Reach | Slope (ft/ft) | n | Bottom Width (ft) | Sideslope1 (x:1) | Sideslope2 (x:1) | Depth (ft) | V (fps) | Q (cfs) | Regime | Flow Probl | Area (SF) | WP (ft) | Hyd. Rad. (ft) | Top Width (ft) | Hyd. Depth (ft) | Nf | Act. Sideslope1 | Act Sideslope2 | Low Flow Check Result | target |
|---|---|---|---|---|---|---|---|---|---|---|---|---|---|---|---|---|---|---|---|---|
| E1 | 0.00315 | 0.033 | 48 | 3 | 3 | 4.8 | 6.18 | 1851.44 | Sub | Low Flow Cha | 299.5200 | 78.3579 | 3.8225 | 76.8 | 3.9000 | 0.5516 | 3 | 3 | 1.617771 | 1850 |
| W1 | 0.0018 | 0.033 | 20 | 3 | 3 | 5.5 | 4.54 | 911.97 | Sub | No Low-Flow | 200.7500 | 54.7851 | 3.6643 | 53 | 3.7877 | 0.4113 | 3 | 3 | 0.800465 | 900 |
| W2 | 0.0033 | 0.033 | 15 | 3 | 3 | 5.2 | 5.76 | 916.91 | Sub | No Low-Flow | 159.1200 | 47.8877 | 3.3228 | 46.2 | 3.4442 | 0.5472 | 3 | 3 | 0.500593 | 900 |
| W3 | 0.002 | 0.033 | 15 | 3 | 3 | 5.9 | 4.81 | 927.81 | Sub | No Low-Flow | 192.9300 | 52.3149 | 3.6879 | 50.4 | 3.8280 | 0.4332 | 3 | 3 | 0.528665 | 900 |

Reference: Chow, Ven Ti. Open-Channel Hydraulics. New York: McGraw-Hill Inc. 1959.
City of Tucson, Drainage Design and Floodplain Management Manual. 1989.

# APPENDIX B

# DRAWINGS

| | |
|---|---|
| Drawing SA1 | Watershed Delineation of Brawley Wash |
| Drawing SA2 | Watershed Delineation of East Branch of the Brawley Wash |
| Drawing SA3 | Marana Regional Landfill Base Map |
| Drawing SA4 | Floodplain Limits Under Existing and Proposed HEC-RAS Conditions |

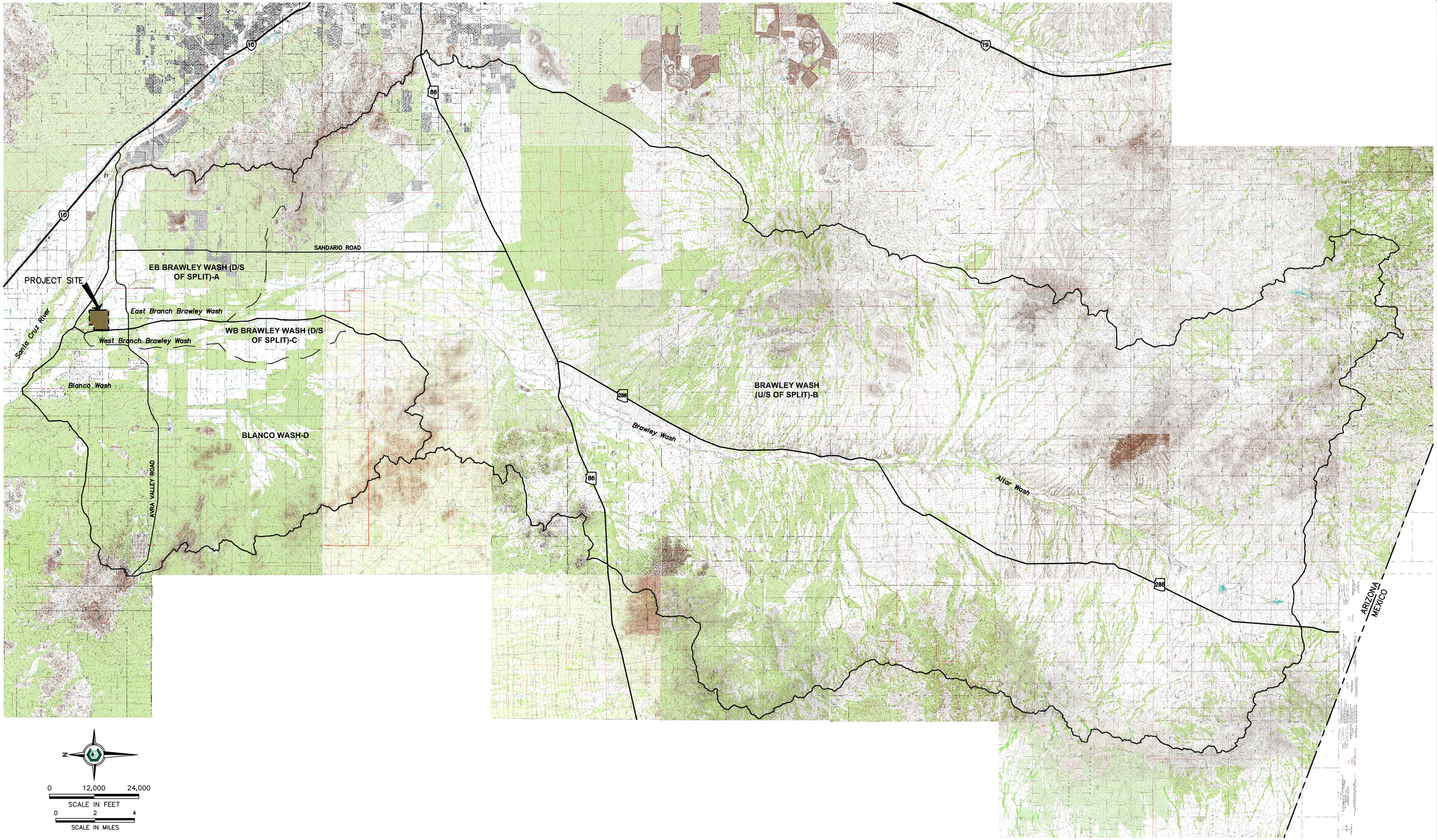


SOURCE: U.S.G.S. 7.5 MINUTE QUADRANGLES (ARIZONA)

**FOR PERMITTING ONLY - NOT FOR CONSTRUCTION**

| REV | DATE | DESCRIPTION | DWN BY | DES BY | CHK BY | APP BY |
|---|---|---|---|---|---|---|
| | | | | | | |

DATE OF ISSUE MAY 2011
DRAWN BY MDC
DESIGNED BY JAP
CHECKED BY JAP
APPROVED BY GRB

CORNERSTONE Environmental Group, LLC

This drawing represents intellectual property of Cornerstone Environmental Group, LLC. Any modification to the original by other than Cornerstone Environmental Group, LLC personnel violates its original purpose and as such is rendered void. Cornerstone Environmental Group, LLC will not be held liable for any changes made to this document without express written consent of the originator.

DKL HOLDINGS
MARANA REGIONAL LANDFILL
MARANA, ARIZONA
**SOLID WASTE FACILITY PLAN**

**BRAWLEY/BLANCO WASH DRAINAGE AREA MAP**

SHEET NO.
**SA1**
PROJECT NO.
090250

File: K:\PROJECTS\MARANA - SWFP - 090250\PROJECT DRAWINGS\SPMSWFP5-FIG SA01_BRAWLEY-BLANCO DRAINAGE.dwg Layout: drainage User: Mark.Crase May 05, 2011 - 1:52pm

1" 1/2" 0"

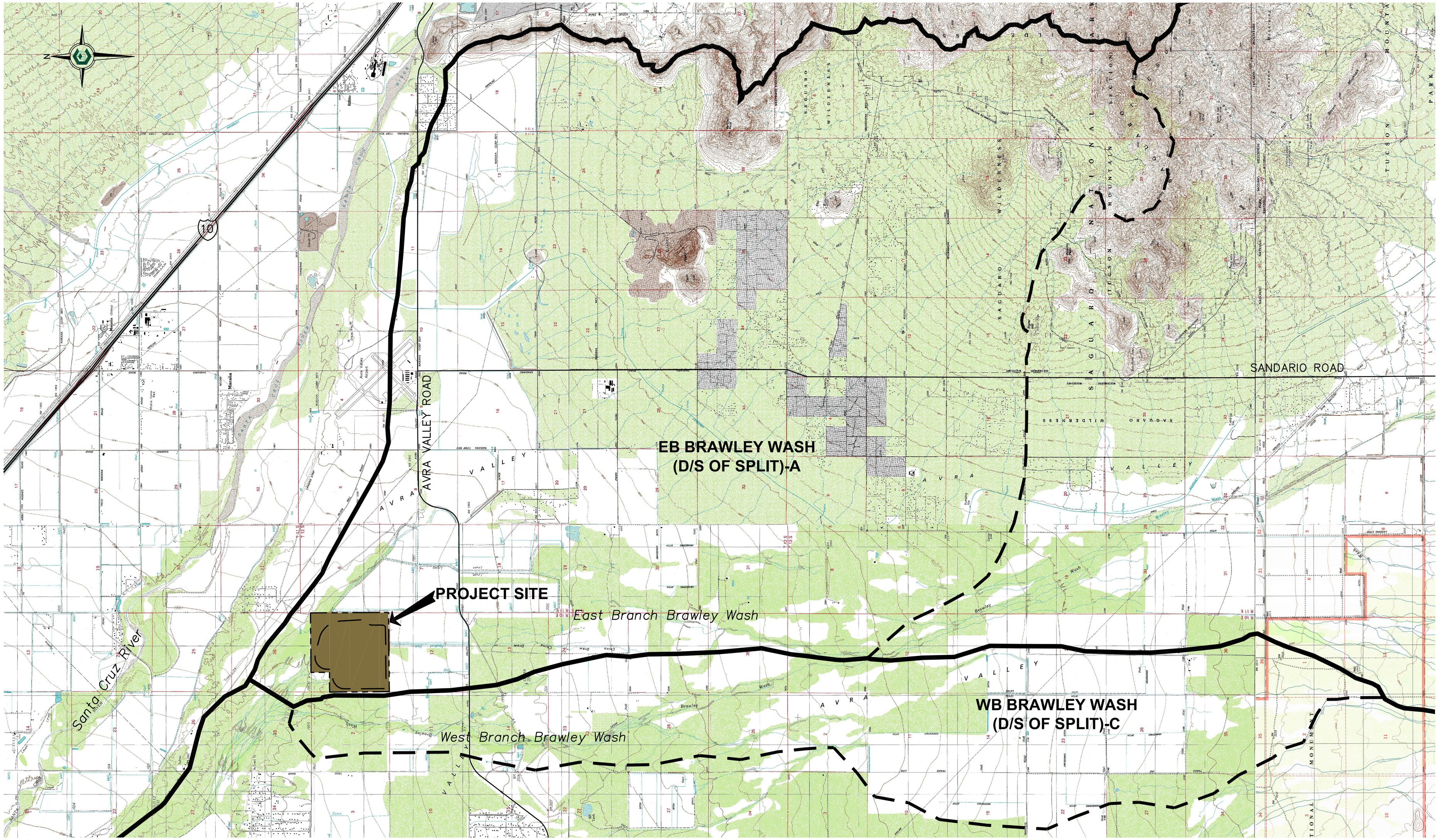


FOR PERMITTING ONLY - NOT FOR CONSTRUCTION

0 3000 6000
SCALE IN FEET

SOURCE: U.S.G.S. 7.5 MINUTE QUADRANGLES (ARIZONA)

| REV | DATE | DESCRIPTION | DWN BY | DES BY | CHK BY | APP BY |
|---|---|---|---|---|---|---|
| | | | | | | |

DATE OF ISSUE MAY 2011
DRAWN BY MDC
DESIGNED BY JAP
CHECKED BY JAP
APPROVED BY GRB

CORNERSTONE Environmental Group, LLC

This drawing represents intellectual property of Cornerstone Environmental Group, LLC. Any modification to the original by other than Cornerstone Environmental Group, LLC personnel violates its original purpose and as such is rendered void. Cornerstone Environmental Group, LLC will not be held liable for any changes made to this document without express written consent of the originator.

DKL HOLDINGS
MARANA REGIONAL LANDFILL
MARANA, ARIZONA
**SOLID WASTE FACILITY PLAN**

**EAST BRANCH BRAWLEY WASH WATERSHED**

SHEET NO.
**SA2**
PROJECT NO.
090250

File: X:\PROJECTS\MARANA - SWTP - 090250\PROJECT DRAWINGS\SPMSWTP5-FIG SA02_BRAWLEY WASH WATERSHED.dwg Layout: SA2 User: Mark.Case May 05, 2011 - 1:54pm

1" 1/2" 0"

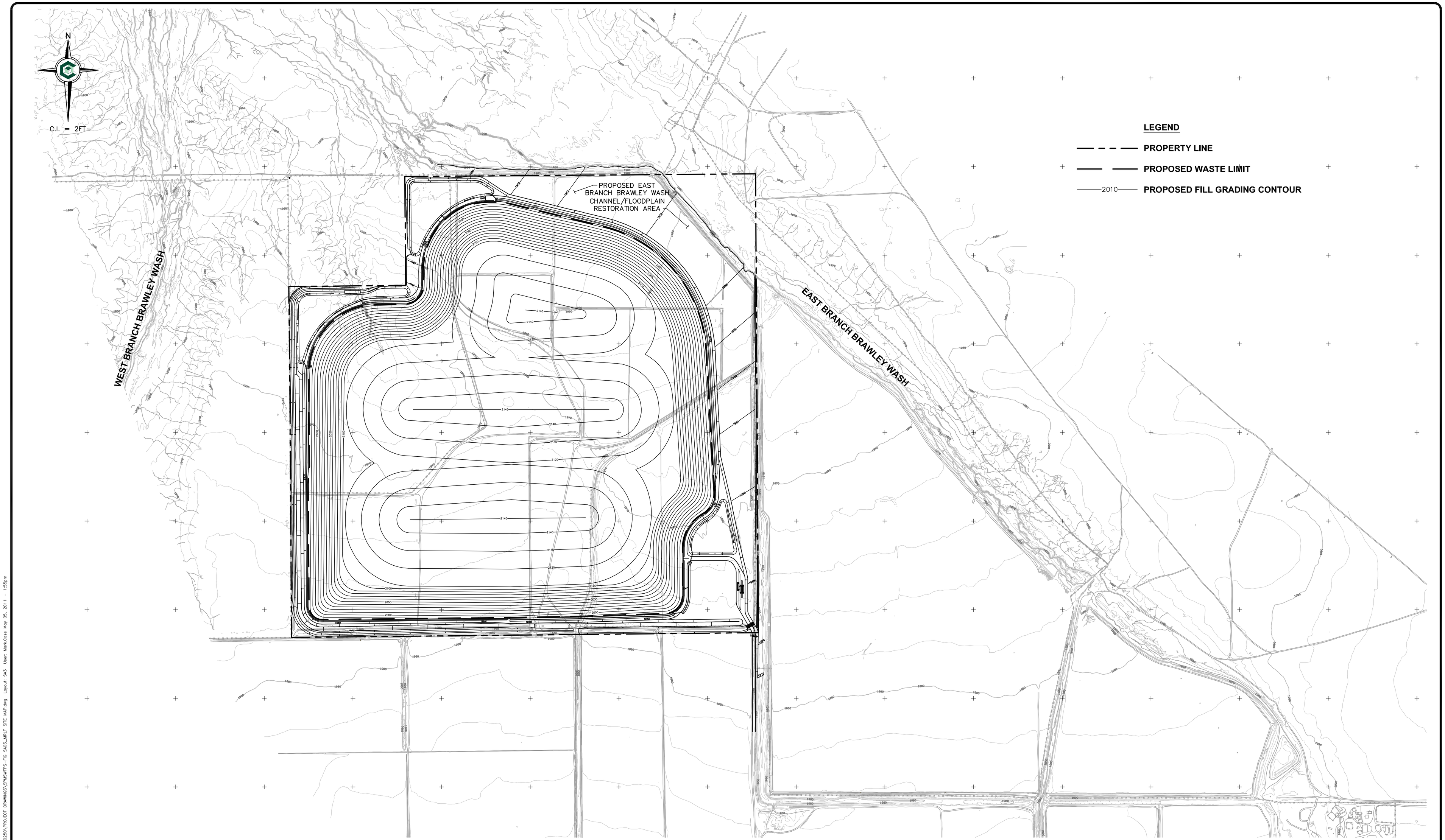


FOR PERMITTING ONLY - NOT FOR CONSTRUCTION

0 500 1000
SCALE IN FEET

TOPOGRAPHY PREPARED BY COOPER AERIAL. THIS COMPUTER PLOTTED MAP WAS GENERATED FROM DATA COMPILED BY DIGITAL STEREO METHODS USING AERIAL PHOTOGRAPHY TAKEN ON APRIL 6, 2010.

| REV | DATE | DESCRIPTION | DWN BY | DES BY | CHK BY | APP BY |
|---|---|---|---|---|---|---|
| | | | | | | |
| | | | | | | |
| | | | | | | |
| | | | | | | |

DATE OF ISSUE MAY 2011
DRAWN BY MDC
DESIGNED BY JAP
CHECKED BY JAP
APPROVED BY GRB

CORNERSTONE Environmental Group, LLC

This drawing represents intellectual property of Cornerstone Environmental Group, LLC. Any modification to the original by other than Cornerstone Environmental Group, LLC personnel violates its original purpose and consent and voids Cornerstone Environmental Group, LLC will not be held liable for any changes made to this document without express written consent of the originator.

DKL HOLDINGS
MARANA REGIONAL LANDFILL
MARANA, ARIZONA
**SOLID WASTE FACILITY PLAN**

**LANDFILL SITE MAP**

SHEET NO.
**SA3**
PROJECT NO.
090250

File: X:\PROJECTS\MARANA - SWTP - 090250\PROJECT DRAWINGS\SPNDWFPS-FIG SA03_MRLF SITE MAP.dwg Layout: SA3 User: Mark.Case May 05, 2011 - 1:55pm

1" 1/2" 0" 1"

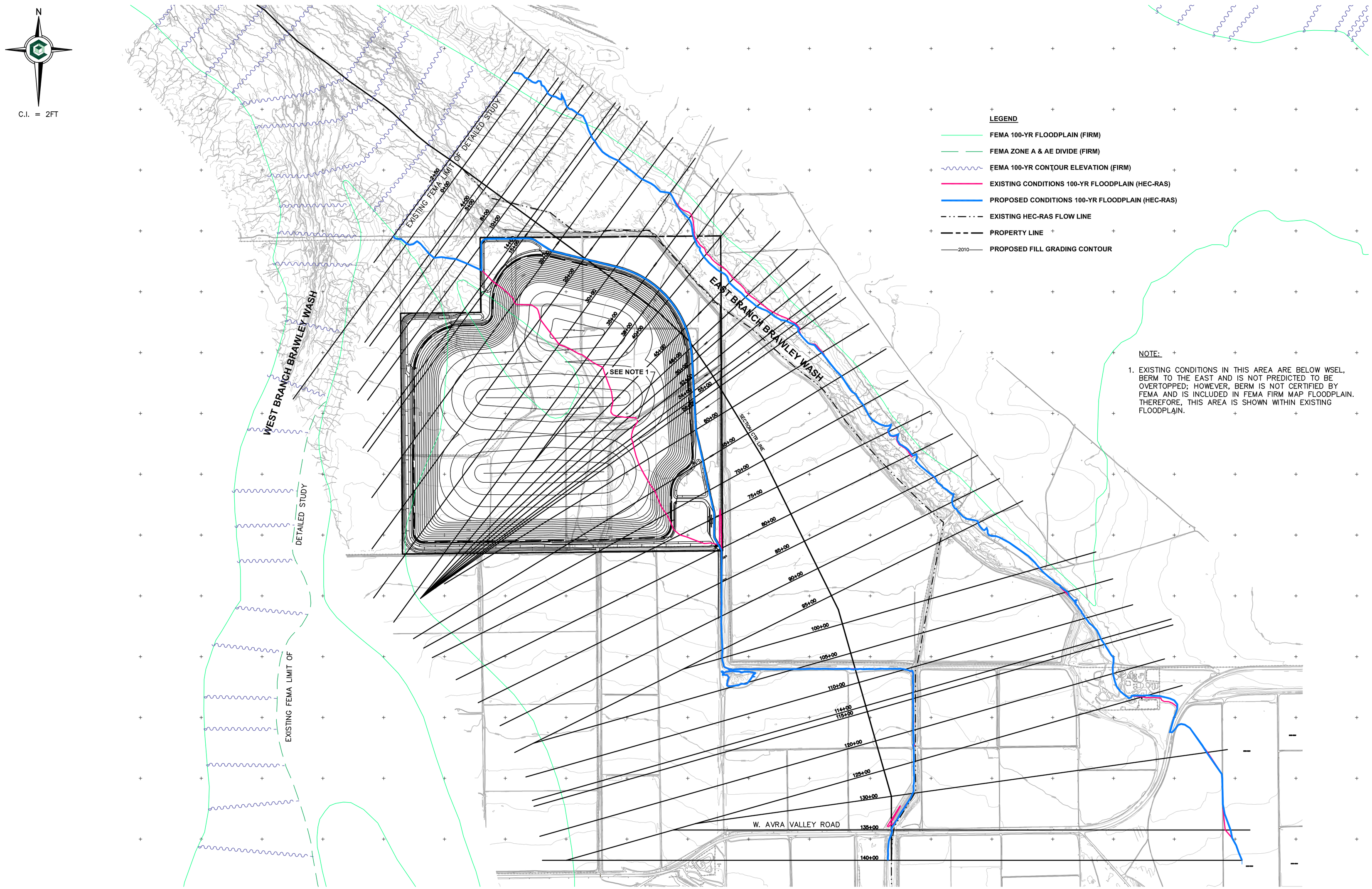


NOTE:

1. EXISTING CONDITIONS IN THIS AREA ARE BELOW WSEL, BERM TO THE EAST AND IS NOT PREDICTED TO BE OVERTOPPED; HOWEVER, BERM IS NOT CERTIFIED BY FEMA AND IS INCLUDED IN FEMA FIRM MAP FLOODPLAIN. THEREFORE, THIS AREA IS SHOWN WITHIN EXISTING FLOODPLAIN.

0 800 1600
SCALE IN FEET

TOPOGRAPHY PREPARED BY COOPER AERIAL. THIS COMPUTER PLOTTED MAP WAS GENERATED FROM DATA COMPILED BY DIGITAL STEREO METHODS USING AERIAL PHOTOGRAPHY TAKEN ON APRIL 6, 2010.

**FOR PERMITTING ONLY - NOT FOR CONSTRUCTION**

| REV | DATE | DESCRIPTION | DWN BY | DES BY | CHK BY | APP BY |
|---|---|---|---|---|---|---|
| | | | | | | |

DATE OF ISSUE MAY 2011
DRAWN BY MDC
DESIGNED BY JAP
CHECKED BY JAP
APPROVED BY GRB

CORNERSTONE Environmental Group, LLC

This drawing represents intellectual property of Cornerstone Environmental Group, LLC. Any modification to the original by other than Cornerstone Environmental Group, LLC personnel violates its original purpose and as such is rendered void. Cornerstone Environmental Group, LLC will not be held liable for any changes made to this document without express written consent of the originator.

DKL HOLDINGS
MARANA REGIONAL LANDFILL
MARANA, ARIZONA
**SOLID WASTE FACILITY PLAN**

# HEC-RAS EXISTING & PROPOSED CONDITIONS FLOODPLAIN LIMITS

SHEET NO.
**SA4**
PROJECT NO.
090250

File: X:\PROJECTS\MARANA - SWFP - 090250\PROJECT DRAWINGS\SPM\SWFP5-FD SA04_FLOODPLAIN X-SEC.dwg Layout: SA4 User: MarkCopp May 05, 2011 - 1:57pm

Project 90250
Revision 0, 5/6/2011

# ON-SITE DRAINAGE MANAGEMENT REPORT

# MARANA REGIONAL LANDFILL
# ON-SITE DRAINAGE MANAGEMENT

## MARANA, ARIZONA

Prepared for

DKL Holdings, Inc

May 2011

Prepared by

CORNERSTONE
Environmental Group, LLC
17 West Wetmore, Suite 310
Tucson, Arizona 85705

Project 090250

**On-Site Drainage Management**
**Marana Regional Landfill**

**Pima County, Arizona**

The material and data in this report were prepared under the supervision and direction of the undersigned. This report was prepared consistent with current and generally accepted geologic and environmental consulting principles and practices that are within the limitations provided herein.

**Cornerstone Environmental Group, LLC**

Registered Professional Engineer (Civil)
CERTIFICATE NO. 52080
CARL E. BUETER
DATE SIGNED 5/6/11
ARIZONA U.S.A.
Expires 6/30/2014

Carl Bueter, P.E.
Project Engineer

Registered Professional Engineer (Civil)
CERTIFICATE NO. 27290
GARTH R. BOWERS
Date Signed 5/6/11
ARIZONA U.S.A.
Exp 9/30/11

Garth R. Bowers, P.E.
Client Manager/Certifying Engineer

# CONTENTS

**LIST OF TABLES AND ILLUSTRATIONS ..... iv**

**1 SUMMARY ..... 1-1**

**2 DETENTION BASINS ..... 2-1**
2.1 Design Criteria and Strategy ..... 2-1
2.2 Design Calculations and Results ..... 2-1

**3 PERIMETER CHANNELS ..... 3-1**
3.1 Design Criteria and Strategy ..... 3-1
3.2 Design Calculations and Results ..... 3-1

**4 DOWNDRAINS ..... 4-1**
4.1 Design Criteria and Strategy ..... 4-1
4.2 Design Calculations and Results ..... 4-1

**5 DIVERSION BERMS ..... 5-1**
5.1 Design Criteria and Strategy ..... 5-1
5.2 Design Calculations and Results ..... 5-1

**6 INTERIM DRAINAGE CONSIDERATIONS ..... 6-1**

**7 DESIGN CONCLUSIONS ..... 7-1**

**LIMITATIONS ..... L-1**

**REFERENCES ..... R-1**

**APPENDICES**

**APPENDIX A HYDROLOGY**
**APPENDIX B HYDRAULIC DESIGN**

# TABLES AND ILLUSTRATIONS

## Tables

SB-1 Detention Basin On-site Drainage Data – 25-year, 24-hour Storm Event

SB-2 Channel Geometry Summary

SB-3 Perimeter Channel On-site Drainage Data – 25-year, 24-hour Storm Event

SB-4 Perimeter Channel On-site Drainage Data – 100-year, 24-hour Storm Event

SB-5 On-site Downdrain Design Data – 25-year, 24-hour Storm Event

SB-6 On-site Downdrain Hydraulics

SB-7 Diversion Berm On-site Drainage Design Data – 25-year, 24-hour Storm Event

# 1 SUMMARY

In order to minimize discharge of sediment and suspended solids from the landfill, stormwater runoff from the landfill will be collected through an on-site drainage management system. In general, on-site channels will convey both the 25-year, 24-hr and 100-year, 24-hour design storm events to detention basins before discharging into the existing Brawley Wash drainageway.

The estimated required capacities for the three basins based on the 25-year, 24-hour design storm for each basin area were calculated using the Rational Method:

- The volume from the west drainage area into the West Basin is 31.82 acre-feet.
- The volume from the east drainage area into the East Basin is 29.06 acre-feet.
- The volume from the south drainage area into the South Basin is 15.30 acre-feet.

Each drainage area was subdivided into smaller areas based on downdrain locations. Downdrains and on-site perimeter channels were sized using the Manning's Equation to handle the resultant flows. Channels are rip-rap lined or riprap sided with soil bottoms and range in size from 2-feet deep v-ditches to trapezoidal channels with a bottom width of up to 9 feet. Downdrains consist of one or more 24-inch diameter HDPE pipe at each downdrain location, with the number of pipes (ranging from 1 to 7) determined based on the number of contributing drainage diversion berms and the estimated 100-year peak flow rate at that location. Sheet flows from the landfill cover are collected and conveyed to the downdrains by a series of low diversion berms.

Additionally, interim drainage conditions were evaluated at the site for Cell 1. An interim basin was sized for the 25-year, 24-hour storm event. The volume into the Cell 1 basin is 6.5 acre-feet.

# 2 DETENTION BASINS

## 2.1 Design Criteria and Strategy

The landfill area contributing to the on-site surface water drainage system was divided into three drainage areas. Each drainage area will drain into functional retention basins located on the perimeter of the landfill as follows: The West Basin, which drains the west drainage area; the East Basin, which drains the east drainage area; and the South Basin, which drains the south drainage area. Flows originating on the landfill cover will be conveyed to the detention basins via diversion berms, downdrains, perimeter channels, catch basins and culverts. For permitting purposes of this Solid Waste Facility Plan, the downdrains and diversion berms are conceptually sized. Drainage will be discharged at controlled flow rates into naturally occurring channels of the Brawley Wash watershed. Flow control structures need to be located and sized as needed during operation of the landfill to accommodate changing conditions. Final design of the post-closure bench and downdrain system will be included in the construction-level design of the final cover.

The East and West Basins, located generally in the northwest corner of the property, are the largest basins on the site. These basins will collect runoff from the majority of the site. The South Basin receives runoff from the south face of the landfill, the entrance facility area, and a small area of the landfill which is adjacent to the basin.

## 2.2 Design Calculations and Results

In order to approximate on-site drainage, the City of Tucson Method was used to estimate the peak discharge from the landfill for both a 25-year, 24-hour design storm event and 100-year, 24-hour design storm event. The hydrologic design data calculations using the City of Tucson Method are presented in Appendix A. In order to size the detention basins, the landfill drainage area was divided into three drainage areas, each with their related basins as discussed above (see drainage map on Design Plan Drawing 6 of the SWFP.

Sizing of the basins were based on the volumes calculated in Table 1 to provide effective detention of flows from routine events at the site. These basins have capacity to contain the entire volume of the storm events up to the 25-year 24-hour storm, with freeboard and emergency spillways (sized for 100-yr flows), and will provide for continued discharge of the final portion of the storm event, via outlet weirs, should it exceed the design volume of the basin.

**TABLE SB-1**
**Detention Basin**
**On-site Drainage Design Data - 25-year, 24-hour Storm Event**
**Marana Regional Landfill**

| Basin | Drainage Area (acres) | Runoff Coefficient (C) | Rainfall Depth (inches) | Calculated Volume (acre-feet) | Provided Volume (acre-feet) |
|---|---|---|---|---|---|
| West | 175.85 | 0.52 | 3.6 | 27.43 | 30.93 |
| East | 203.99 | 0.52 | 3.6 | 31.82 | 38.47 |
| South | 90.21 | 0.52 | 3.6 | 15.30 | 16.30* |

*-To design water surface elevation of 1971.0 feet msl.

# 3 PERIMETER CHANNELS

## 3.1 Design Criteria and Strategy

The perimeter channels are sized at the downstream end based on the 100-year, 24-hour design storm event using the maximum flow rate predicted by the methodologies contained in the *Standards Manual for Drainage Design and Floodplain Management in Tucson, Arizona* (COT, 1989). This methodology is based on the City of Tucson Method which essentially relates stormwater runoff flow rates to rainfall intensity based on the drainage area contributing to the channel and a factor to account for infiltration and local abstractions within the drainage area. Appendix A contains information on the estimation of both the 25-year, 24-hour design storm event and the 100-year, 24-hour design storm peak flowrates for each of the channels along with conceptual sizing information. Consideration has been given to incorporating several different channel cross-sections along the length of a given channel to carry larger flows in the downstream end of the channel due to an increasing contributing area. A more detailed channel design should be conducted prior to construction of the channels to incorporate the actual final cover configurations, diversion berms, and downdrain locations, as well as armoring/freeboard considerations at critical channel locations including bends, junctions, grade breaks, and flow regime changes.

## 3.2 Design Calculations and Results

Given the known incoming flows from each phase area of the landfill, Manning's Equation was used to size a trapezoidal channel adequate to provide flow capacity for on-site area flows. By varying the channel bottom width, channel slope, and depth of the channel, the flow capacity of the channel was calculated and compared with the estimated flow collected from each drainage area. All channel side slopes were 3:1 for perimeter collector channels. The Manning's roughness coefficients used with the Manning's Equation are values commonly used in design and are found in the *Standards Manual for Drainage Design and Floodplain Management*; Table 8.1, pg. 8.06 "Manning's Roughness Coefficients" (Appendix B.) The Manning's roughness coefficient used for a fully lined riprap channel was 0.04.

In order to reduce velocity and potential scour, riprap with a $D_{50}$ of six inches was placed on all banks of the channels (See Design Plan Drawings 6 and 13). Table 2 summarizes the channel geometry. All sideslopes are graded at 3:1. Tables 3 and 4 present the hydraulic properties of each channel for the 25-year and 100-year peak flows, respectively. Each channel segment has an acceptable freeboard allowance for the 25-year storm (at least 1.0 feet for trapezoidal channels and 0.5 feet for smaller triangular channels) and will contain flows from the 100-year storm event without overtopping.

**Table SB-2**
**Channel Geometry Summary**
**Marana Regional Landfill**

| Perimeter Channel | Bottom Width (ft) | Channel Depth (ft) | Side Slopes (H:V) | Longitudinal Slope (ft/ft) | Material |
|---|---|---|---|---|---|
| Channel S1a | 5.0 | 4.75 | 3:1 | 0.0075 | Riprap Bottom and Sides |
| Channel S2a | 0 | 2.0 | 3:1 | 0.005 | Riprap Bottom and Sides |
| Channel S2b | 0 | 2.0 | 3:1 | 0.005 | Riprap Bottom and Sides |
| Channel S4a | 0 | 2.0 | 3:1 | 0.0032 | Riprap Bottom and Sides |
| Channel at entry area | 6 | 4.5 | 3:1 | .005 | Riprap Bottom and Sides |
| Channel E1a | 0 | 2.0 | 3:1 | 0.0032 | Riprap Sides and Soil Bottom |
| Channel E1b | 9.0 | 5.0 | 3:1 | 0.0028 | Riprap Sides and Soil Bottom |
| Channel E2a | 9.0 | 5.0 | 3:1 | 0.0028 | Riprap Bottom and Sides |
| Channel E3a | 9.0 | 5.0 | 3:1 | 0.0038 | Riprap Bottom and Sides |
| Channel E4a | 0 | 2.0 | 3:1 | 0.0048 | Riprap Bottom and Sides |
| Channel E4b | 0 | 2.0 | 3:1 | 0.0077 | Riprap Bottom and Sides |
| Channel W1a | 6.0 | 5.0 | 3:1 | 0.0033 | Riprap Bottom and Sides |
| Channel W1b | 0 | 2.0 | 3:1 | 0.0016 | Riprap Bottom and Sides |
| Channel W2a | 4.0 | 2.5 | 3:1 | 0.0061 | Riprap Bottom and Sides |
| Channel W2b | 6.5 | 5.0 | 3:1 | 0.0061 | Riprap Bottom and Sides |
| Channel W2c | 0 | 2.25 | 3:1 | 0.0016 | Riprap Bottom and Sides |

**TABLE SB-3**

**Perimeter Channel**
**On-site Drainage Design Data**
**25-year Storm Event, Peak Flow Rate**
**Marana Regional Landfill**

| Perimeter Channel | Depth (ft) | 25-year Freeboard | Velocity (ft/s) | Flowrate (cfs) |
|---|---|---|---|---|
| Channel S1a | 3.25 | 1.5 | 4.9 | 223.8 |
| Channel S2a | 0.9 | 1.1 | 1.5 | 3.2 |
| Channel S2b | 0.9 | 1.1 | 1.5 | 3.2 |
| Channel S4a | 1.25 | 0.75 | 1.5 | 6.7 |
| Channel at entry area | 3.4 | 1.6 | 4.2 | 223.8 |
| Channel E1a | 1.0 | 1.0 | 1.3 | 3.0 |
| Channel E1b | 3.4 | 1.6 | 3.3 | 212.7 |
| Channel E2a | 3.4 | 1.6 | 3.2 | 212.7 |
| Channel E3a | 3.5 | 1.5 | 3.9 | 244.9 |
| Channel E4a | 1.1 | 0.9 | 1.7 | 5.7 |
| Channel E4b | 1.3 | 0.7 | 2.7 | 11.7 |
| Channel W1a | 3.5 | 1.5 | 3.5 | 182.4 |
| Channel W1b | 1.1 | 0.9 | 1.0 | 3.4 |
| Channel W2a | 1.3 | 1.2 | 2.6 | 26.0 |
| Channel W2b | 3.4 | 1.6 | 4.7 | 261.8 |
| Channel W2c | 1.4 | 0.9 | 1.1 | 6.4 |

**TABLE SB-4**

**Perimeter Channel**
**On-site Drainage Design Data**
**100-year Storm Event, Peak Flow Rate**
**Marana Regional Landfill**

| Perimeter Channel | Depth (ft) | 100-year Freeboard (ft) | Velocity (ft/s) | Flowrate (cfs) |
|---|---|---|---|---|
| Channel S1a | 4.25 | 0.75 | 5.7 | 407.0 |
| Channel S2a | 1.1 | 0.9 | 1.7 | 5.8 |
| Channel S2b | 1.1 | 0.9 | 1.7 | 5.8 |
| Channel S4a | 1.6 | 0.4 | 1.75 | 12.3 |
| Channel at entry area | 4.5 | 0.5 | 4.9 | 407.0 |
| Channel E1a | 1.25 | 0.75 | 1.5 | 5.5 |
| Channel E1b | 4.5 | 0.5 | 3.8 | 386.7 |
| Channel E2a | 4.5 | 0.5 | 3.8 | 386.7 |
| Channel E3a | 4.5 | 0.5 | 4.5 | 445.3 |
| Channel E4a | 1.4 | 0.6 | 2.0 | 10.4 |
| Channel E4b | 1.7 | 0.3 | 2.8 | 21.3 |
| Channel W1a | 4.5 | 0.5 | 4.0 | 331.7 |
| Channel W1b | 1.4 | 0.6 | 1.2 | 6.1 |
| Channel W2a | 1.8 | 0.7 | 3.1 | 47.3 |
| Channel W2b | 4.5 | 0.5 | 5.5 | 476.0 |
| Channel W2c | 1.75 | 0.5 | 1.3 | 11.7 |

# 4 DOWNDRAINS

## 4.1 Design Criteria and Strategy

Based on the configuration of the topography of the landfill final cover there are a number of swales formed on the top deck which would naturally collect runoff and convey it toward the perimeter channel system. Constructed downdrains will be placed at these locations to control these flows and protect the integrity of the final cover system. In addition, on longer sideslopes between these "natural" swales, additional constructed downdrains are proposed to minimize the required length of diversion berms. These additional downdrains are conceptually located for permitting purposes but may be repositioned slightly to address actual future cover conditions. The largest contributing area on the top deck was used for calculating the required diameter and number of the downdrain culverts at the ends of the "natural" swales from the top deck area. The largest area contributing to a downdrain from one of the drainage diversion berms (see Section 5) was also evaluated to size the downdrain pipes from the drainage diversion berms.

## 4.2 Design Calculations and Results

In order to size the largest contributing downdrain area, the City of Tucson Method was used to estimate the time of concentration and peak stormwater flowrates from the downdrains for a 100-year, 24-hour design storm event. Please refer to Table 5 for the largest contributing area parameters.

**TABLE SB-5**

**On-site Downdrain Design Data**
**25-year, 24-hour Storm Event & 100-year, 24-hour Storm Event**
**Marana Regional Landfill**

| Downdrain | Drainage Area (acres) | Runoff Coefficient (C) | 25-year Peak Flow (cfs) | 100-year Peak Flow (cfs) |
|---|---|---|---|---|
| W2 | 53.96 | 0.62 | 130.3 | 236.9 |
| S1 | 30.1 | 0.62 | 75.1 | 136.6 |

Based on the flow rates presented above and the capacity calculated for single 2-foot diameter HDPE downdrain pipe at this location, the required number of pipes was conceptually determined as follows:

**TABLE SB-6**

**On-site Downdrain Hydraulics**
**Marana Regional Landfill**

| Downdrain | Number of Pipes | 100-year Required Capacity (cfs) | Available Capacity (cfs) |
|---|---|---|---|
| W2 | 2 | 236.9 | 436 |
| S1 | 1 | 136.6 | 207.7 |

# 5 DIVERSION BERMS

## 5.1 Design Criteria and Strategy

In order to reduce sheet flow length and minimize rilling of the final cover, diversion berms are proposed to collect flows from the landfill surface and convey them over to the downdrains. These diversion berms would be low (~2 feet high) soil berms to minimize the impact on the visual appearance of the final cover. A shallow longitudinal slope (0.5%) was considered to maintain low velocities and minimize erosion potential. Based on these design constraints, the maximum berm length and vertical spacing was determined for the range of slope conditions proposed for the landfill cover.

## 5.2 Design Calculations and Results

Diversion berms were conceptually designed using the flowrates calculated using Manning's equation. Berms were applied throughout the entire landfill with a height of 2 feet accounting for 6 inches of freeboard and a flow depth of 1.5 feet. Diversion berms on the landfill were sized to convey the runoff to each drainage-area of the landfill and eventually to on-site perimeter channels (Table 3). A Manning's Coefficient (n=0.035) was applied for the diversion berms. Diversion berms had no bottom width with a channel slope of 0.005 ft/ft.

The capacities of the berms on the top deck were calculated using one sideslope of 3:1, and the other sideslope being 20:1 as the top deck of the landfill typically has a five-percent slope. The capacity of the berms along the sideslopes of the landfill were calculated by assuming a depth of flow of 1.5-feet for the 25-year, 24-hour storm, and determining the drainage area required to achieve this depth. The horizontal distance between the berms was considered the width of this area and the length then calculated. None of the berms exceed this length, therefore, the depth of flow will be no more than 1.5-feet. These berms all have 6-inches of freeboard, and the calculation was repeated for a flow depth of 2-feet which confirmed that the 100-year, 24-hr flows can be conveyed utilizing the capacity contained in the freeboard.

**TABLE SB-7**

**Diversion Berm**
**On-site Drainage Design Data**
**25-year, 24-hour Storm Event**
**Marana Regional Landfill**

| Diversion Berm Spacing (ft) | Slope (ft/ft) | Drainage Area (acres) | Runoff Coefficient (C) | Rainfall Intensity (in/hr) | Flowrate (cfs) | Diversion Berm Length (max) (ft) |
|---|---|---|---|---|---|---|
| 75 | .005 | 5.9 | 0.52 | 5.28 | 16.2 | 3,415 |

# 6 INTERIM DRAINAGE CONSIDERATIONS

Interim drainage conditions were evaluated for the site for Cell 1A as a typical calculation for stormwater management for below-grade excavation areas. As landfill cells progress above grade, stormwater flows will be directed to perimeter channels, constructed to the dimensions indicated in Section 3. As additional cells are excavated, drainage controls (retention basins and diversion berms) will be sized based on similar calculations.

Interim conditions were evaluated for the 25-year, 24-hour storm for Cell 1A, (temporary basin and berms). The basin design was based on the Rational Method.

An earthen diversion berm will be placed east of Cell 1A to direct sheet flows around the excavation.

The volume into the temporary basin 1A is 6.5 acre-feet, with 1.0 feet of freeboard.

The interim stormwater controls for these cells are conceptually designed to maintain relatively low velocities and adequate basin freeboard. The runoff for the berms was calculated using the City of Tucson Hydrologic Method. The berm design was evaluated using Manning's equation with an n of 0.025 for clean earth.

# 7 DESIGN CONCLUSIONS

The collector channels and detention basins are designed to accommodate the estimated flows from each of the designated drainage areas on the landfill with six inches of freeboard. The flow capacities for the collector channels were based on the 25-year (with freeboard) and 100-year (without freeboard) design storm's peak discharge estimated from each drainage area of the landfill, using the City of Tucson Method.

In order to minimize discharge of sediment and suspended solids from the landfill, stormwater runoff from the landfill will be collected through an on-site drainage management system. In general, on-site channels will convey both the 25-year, 24-hour design storm event and the 100-year, 24-hour design storm event to functional retention basins before discharging into the existing Brawley Wash Watershed drainageways.

The estimated required capacities for the four basins based on the 25-year, 24-hour design storm for each basin area were calculated using the City of Tucson Method:

- The volume from the West drainage area into the West Basin is 27.4 acre-feet.
- The volume from the East drainage area into the East Basin is 31.8 acre-feet, and;
- The volume from the South drainage area into the South Basin is 15.3 acre-feet.

Each drainage area was subdivided into smaller areas based on downdrain locations. Downdrains and on-site perimeter channels were sized using the Manning's Equation to handle the resultant flows. Downdrains are one or more 24-inch diameter HDPE pipes, with required number of pipes at each downdrain location determined based on the pipe capacity and 100-year peak flow rates. Channels are rip-rap lined and range in size from 2-feet deep v-ditches to trapezoidal channels with a bottom width of 9 feet. Sheet flows from the landfill cover are collected and conveyed to the downdrains by a series of low diversion berms.

# LIMITATIONS

The services described in this report were performed consistent with generally accepted professional consulting principles and practices. No other warranty, express or implied, is made. These services were performed consistent with our agreement with our client. This report is solely for the use and information of our client unless otherwise noted. Any reliance on this report by a third party is at such party's sole risk.

Opinions and recommendations contained in this report apply to conditions existing when services were performed and are intended only for the client, purposes, locations, time frames, and project parameters indicated. We are not responsible for the impacts of any changes in environmental standards, practices, or regulations subsequent to performance of services. We do not warrant the accuracy of information supplied by others, nor the use of segregated portions of this report.

# REFERENCES

Brater, Ernest et al. *Handbook of Hydraulics 7th Ed*. New York: McGraw-Hill, 1996. Print.

Chow, Ven Te. *Open Channel Hydraulics*. New York: McGraw-Hill, 1959. Print.

City of Tucson (COT). *Standards Manual for Drainage Design & Floodplain Management in Tucson, Arizona.* Prepared by Simons, Li & Associates. 1989. Print.

Crowe, Clayton et al. *Engineering Fluid Mechanics 7th Ed*. New York: John Wiley and Sons, 2001. Print.

Mays, Larry. *Water Resources Engineering*. New York: John Wiley and Sons, 2001. Print.

National Weather Service (NOAA). *Isopluval Maps of Arizona*. Map. NOAA Atlas 2 Vol. VIII.

# APPENDIX A

# HYDROLOGY

1. Retention Basins
2. Downdrains
3. Diversion Berms
4. Off-Site
5. Interim
6. Supporting Information

## City of Tucson Hydrologic Data Sheet

Prepared by: CEB
Date: April 13, 2011
Checked by: GRB
Date: May 3, 2011

| | | | |
|---|---|---|---|
| **Project Name:** | Marana Regional | | |
| **Project Number:** | 090250 | | |
| **Concentration Point:** | South downdrains outlet | | |
| | | | |
| **Watershed Area:** | 71.47 | ac | |
| **Length (Lc)** | 1124.5 | ft | (Length of hydraulically longest watercourse) |
| **Length (Lca)** | 562 | ft | (Length to center of watershed area along Lc) |

| **Change in Length Factors** | | | **Change in Slope Factors** | | |
|---|---|---|---|---|---|
| **Reach No.** | **Delta L** | **Delta $L^3$** | **Delta H** | **elta $L^3$/Delta** | **Slope** |
| **1** | 770.00 | 4.57E+08 | 35.00 | 1.30E+07 | 4.55% |
| **2** | 354.00 | 4.44E+07 | 113.80 | 3.90E+05 | 32.15% |
| **3** | 0.50 | 1.25E-01 | 0.20 | 6.25E-01 | 40.00% |
| Length Check OK | | | | | |

| | | | |
|---|---|---|---|
| | | | |
| **G Factor** | 4237 | | |
| **Mean Slope** | 0.0704 | | |
| | | | |
| **P(1,100)** | 3 | in | (Areally reduced 100 yr, 1hr rainfall depth) |

| **Basin Hydrologic Factors** | | | | | |
|---|---|---|---|---|---|
| | **Subarea 1** | **Subarea 2** | **Subarea 3** | **Weighted Parameters** | |
| **Watershed Type** | Nat | Nat | Nat | | |
| **Percent of A** | 10 | 15 | 75 | | 100 |
| **Basin Factor (Nb)** | 0.055 | 0.035 | 0.055 | **sin Factor (N** | 0.052052668 |
| **Soil Types** | B | B | B | | |
| **Imperviousness (%)** | 3 | 3 | 3 | **Iw** | 3 |
| **Runoff Coefficient (Cw)** | 0.6 | 0.6 | 0.6 | **Cw** | 0.6 |

| **Results** | | | |
|---|---|---|---|
| **Time of Concentration** | 5.3 | min | (Calculated) |
| **Time of Concentration** | 5.3 | min | (Utilized) |
| **Rainfall Intensity (i100)** | 9.49 | in/hr | |
| **Q100** | 407.0 | cfs | |
| | | | |

| **Calc Q for other Return Intervals** | | |
|---|---|---|
| **Return Interval (yrs)** | **Ratio** | **Q(cfs)** |
| 2 | 0.05 | 20.3 |
| 5 | 0.2 | 81.4 |
| 10 | 0.35 | 142.4 |
| 25 | 0.55 | 223.8 |
| 50 | 0.75 | 305.2 |
| 100 | 1 | 407.0 |

## City of Tucson Hydrologic Data Sheet

Prepared by: CEB
Date: April 13, 2011
Checked by: GRB
Date: May 3, 2011

| | | | |
|---|---|---|---|
| **Project Name:** | Marana Regional | | |
| **Project Number:** | 090250 | | |
| **Concentration Point:** | S1a | | |
| | | | |
| **Watershed Area:** | 78.33 | ac | |
| **Length (Lc)** | 2963.5 | ft | (Length of hydraulically longest watercourse) |
| **Length (Lca)** | 1481.75 | ft | (Length to center of watershed area along Lc) |

| **Change in Length Factors** | | | **Change in Slope Factors** | | |
|---|---|---|---|---|---|
| **Reach No.** | **Delta L** | **Delta $L^3$** | **Delta H** | **lta $L^3$/Delta** | **Slope** |
| **1** | 770.00 | 4.57E+08 | 35.00 | 1.30E+07 | 4.55% |
| **2** | 354.50 | 4.46E+07 | 114.00 | 3.91E+05 | 32.16% |
| **3** | 1839.00 | 6.22E+09 | 18.00 | 3.46E+08 | 0.98% |
| Length Check OK | | | | | |

| | | | |
|---|---|---|---|
| **G Factor** | 22825 | | |
| **Mean Slope** | 0.0169 | | |
| | | | |
| **P(1,100)** | 3 | in | (Areally reduced 100 yr, 1hr rainfall depth) |

| **Basin Hydrologic Factors** | | | | | |
|---|---|---|---|---|---|
| | **Subarea 1** | **Subarea 2** | **Subarea 3** | **Weighted Parameters** | |
| **Watershed Type** | Nat | Nat | Nat | | |
| **Percent of A** | 10 | 15 | 75 | | 100 |
| **Basin Factor (Nb)** | 0.035 | 0.035 | 0.035 | **n Factor (N** | 0.035 |
| **Soil Types** | B | B | B | | |
| **Imperviousness (%)** | 3 | 3 | 3 | **Iw** | 3 |
| **Runoff Coefficient (Cw)** | 0.62 | 0.62 | 0.62 | **Cw** | 0.62 |

| **Results** | | | |
|---|---|---|---|
| **Time of Concentration** | 11.2 | min | (Calculated) |
| **Time of Concentration** | 11.2 | min | (Utilized) |
| **Rainfall Intensity (i100)** | 7.70 | in/hr | |
| **Q100** | 374.1 | cfs | |
| | | | |

| **Calc Q for other Return Intervals** | | |
|---|---|---|
| **Return Interval (yrs)** | **Ratio** | **Q(cfs)** |
| 2 | 0.05 | 18.7 |
| 5 | 0.2 | 74.8 |
| 10 | 0.35 | 130.9 |
| 25 | 0.55 | 205.8 |
| 50 | 0.75 | 280.6 |
| 100 | 1 | 374.1331 |

Note: this result was not used, as the adjacent downdrain introduces greater flows at the upstream end of the channel. 407.0 cfs was used.

# City of Tucson Hydrologic Data Sheet

Prepared by: CEB
Date: April 13, 2011
Checked by: GRB
Date: May 3, 2011

| | | | |
|---|---|---|---|
| **Project Name:** | Marana Regional | | |
| **Project Number:** | 090250 | | |
| **Concentration Point:** | S2a | | |
| | | | |
| **Watershed Area:** | 1 | ac | |
| **Length (Lc)** | 416 | ft | (Length of hydraulically longest watercourse) |
| **Length (Lca)** | 192 | ft | (Length to center of watershed area along Lc) |

| **Change in Length Factors** | | | **Change in Slope Factors** | | |
|---|---|---|---|---|---|
| **Reach No.** | **Delta L** | **Delta $L^3$** | **Delta H** | **lta $L^3$/Delta** | **Slope** |
| **1** | 100.00 | 1.00E+06 | 12.00 | 8.33E+04 | 12.00% |
| **2** | 158.00 | 3.94E+06 | 2.35 | 1.68E+06 | 1.49% |
| **3** | 158.00 | 3.94E+06 | 2.35 | 1.68E+06 | 1.49% |
| Length Check OK | | | | | |

| | | | |
|---|---|---|---|
| | | | |
| **G Factor** | 2880 | | |
| **Mean Slope** | 0.0209 | | |
| | | | |
| **P(1,100)** | 3 | in | (Areally reduced 100 yr, 1hr rainfall depth) |

| **Basin Hydrologic Factors** | | | | | |
|---|---|---|---|---|---|
| | **Subarea 1** | **Subarea 2** | **Subarea 3** | **Weighted Parameters** | |
| **Watershed Type** | Nat | Nat | Nat | | |
| **Percent of A** | 10 | 15 | 75 | | 100 |
| **Basin Factor (Nb)** | 0.035 | 0.035 | 0.035 | **n Factor (N** | 0.035 |
| **Soil Types** | B | B | B | | |
| **Imperviousness (%)** | 3 | 3 | 3 | **Iw** | 3 |
| **Runoff Coefficient (Cw)** | 0.6 | 0.6 | 0.6 | **Cw** | 0.6 |

| **Results** | | | |
|---|---|---|---|
| **Time of Concentration** | 3.5 | min | (Calculated) |
| **Time of Concentration** | 5.0 | min | (Utilized) |
| **Rainfall Intensity (i100)** | 9.60 | in/hr | |
| **Q100** | 5.8 | cfs | |
| | | | |

| **Calc Q for other Return Intervals** | | |
|---|---|---|
| **Return Interval (yrs)** | **Ratio** | **Q(cfs)** |
| 2 | 0.05 | 0.3 |
| 5 | 0.2 | 1.2 |
| 10 | 0.35 | 2.0 |
| 25 | 0.55 | 3.2 |
| 50 | 0.75 | 4.3 |
| 100 | 1 | 5.8 |

# City of Tucson Hydrologic Data Sheet

Prepared by: CEB
Date: April 13, 2011
Checked by: GRB
Date: May 3, 2011

| | | | |
|---|---|---|---|
| **Project Name:** | Marana Regional | | |
| **Project Number:** | 090250 | | |
| **Concentration Point:** | S2b | | |
| | | | |
| **Watershed Area:** | 1 | ac | |
| **Length (Lc)** | 385 | ft | (Length of hydraulically longest watercourse) |
| **Length (Lca)** | 189 | ft | (Length to center of watershed area along Lc) |

| **Change in Length Factors** | | | **Change in Slope Factors** | | |
|---|---|---|---|---|---|
| **Reach No.** | **Delta L** | **Delta $L^3$** | **Delta H** | **lta $L^3$/Delta** | **Slope** |
| **1** | 73.00 | 3.89E+05 | 12.00 | 3.24E+04 | 16.44% |
| **2** | 156.00 | 3.80E+06 | 2.85 | 1.33E+06 | 1.83% |
| **3** | 156.00 | 3.80E+06 | 2.85 | 1.33E+06 | 1.83% |
| Length Check OK | | | | | |

| | | | |
|---|---|---|---|
| | | | |
| **G Factor** | 2488 | | |
| **Mean Slope** | 0.0239 | | |
| | | | |
| **P(1,100)** | 3 | in | (Areally reduced 100 yr, 1hr rainfall depth) |

| **Basin Hydrologic Factors** | | | | | |
|---|---|---|---|---|---|
| | **Subarea 1** | **Subarea 2** | **Subarea 3** | **Weighted Parameters** | |
| **Watershed Type** | Nat | Nat | Nat | | |
| **Percent of A** | 10 | 15 | 75 | | 100 |
| **Basin Factor (Nb)** | 0.035 | 0.035 | 0.035 | **n Factor (N** | 0.035 |
| **Soil Types** | B | B | B | | |
| **Imperviousness (%)** | 3 | 3 | 3 | **Iw** | 3 |
| **Runoff Coefficient (Cw)** | 0.6 | 0.6 | 0.6 | **Cw** | 0.6 |

| **Results** | | | |
|---|---|---|---|
| **Time of Concentration** | 3.4 | min | (Calculated) |
| **Time of Concentration** | 5.0 | min | (Utilized) |
| **Rainfall Intensity (i100)** | 9.60 | in/hr | |
| **Q100** | 5.8 | cfs | |
| | | | |

| **Calc Q for other Return Intervals** | | |
|---|---|---|
| **Return Interval (yrs)** | **Ratio** | **Q(cfs)** |
| 2 | 0.05 | 0.3 |
| 5 | 0.2 | 1.2 |
| 10 | 0.35 | 2.0 |
| 25 | 0.55 | 3.2 |
| 50 | 0.75 | 4.3 |
| 100 | 1 | 5.8 |

## City of Tucson Hydrologic Data Sheet

Prepared by: CEB
Date: April 27, 2011
Checked by: GRB
Date: May 3, 2011

| | | | |
|---|---|---|---|
| **Project Name:** | Marana Regional | | |
| **Project Number:** | 090250 | | |
| **Concentration Point:** | S4a | | |
| | | | |
| **Watershed Area:** | 2.11 | ac | |
| **Length (Lc)** | 820 | ft | (Length of hydraulically longest watercourse) |
| **Length (Lca)** | 410 | ft | (Length to center of watershed area along Lc) |

| **Change in Length Factors** | | | **Change in Slope Factors** | | |
|---|---|---|---|---|---|
| **Reach No.** | **Delta L** | **Delta $L^3$** | **Delta H** | **elta $L^3$/Delta** | **Slope** |
| **1** | 65.00 | 2.75E+05 | 22.00 | 1.25E+04 | 33.85% |
| **2** | 377.00 | 5.36E+07 | 4.00 | 1.34E+07 | 1.06% |
| **3** | 378.00 | 5.40E+07 | 4.13 | 1.31E+07 | 1.09% |
| Length Check OK | | | | | |

| | | | |
|---|---|---|---|
| | | | |
| **G Factor** | 7388 | | |
| **Mean Slope** | 0.0123 | | |
| | | | |
| **P(1,100)** | 3 | in | (Areally reduced 100 yr, 1hr rainfall depth) |

| **Basin Hydrologic Factors** | | | | | |
|---|---|---|---|---|---|
| | **Subarea 1** | **Subarea 2** | **Subarea 3** | **Weighted Parameters** | |
| **Watershed Type** | Nat | Nat | Nat | | |
| **Percent of A** | 10 | 15 | 75 | | 100 |
| **Basin Factor (Nb)** | 0.035 | 0.035 | 0.035 | **sin Factor (N** | 0.035 |
| **Soil Types** | B | B | B | | |
| **Imperviousness (%)** | 3 | 3 | 3 | **Iw** | 3 |
| **Runoff Coefficient (Cw)** | 0.62 | 0.62 | 0.62 | **Cw** | 0.62 |

| **Results** | | | |
|---|---|---|---|
| **Time of Concentration** | 5.8 | min | (Calculated) |
| **Time of Concentration** | 5.8 | min | (Utilized) |
| **Rainfall Intensity (i100)** | 9.31 | in/hr | |
| **Q100** | 12.2 | cfs | |

| **Calc Q for other Return Intervals** | | |
|---|---|---|
| **Return Interval (yrs)** | **Ratio** | **Q(cfs)** |
| 2 | 0.05 | 0.6 |
| 5 | 0.2 | 2.4 |
| 10 | 0.35 | 4.3 |
| 25 | 0.55 | 6.7 |
| 50 | 0.75 | 9.1 |
| 100 | 1 | 12.2 |

# City of Tucson Hydrologic Data Sheet

Prepared by: CEB
Date: April 27, 2011
Checked by: GRB
Date: May 3, 2011

| | | | |
|---|---|---|---|
| **Project Name:** | Marana Regional | | |
| **Project Number:** | 090250 | | |
| **Concentration Point:** | south basin inlet | | |
| | | | |
| **Watershed Area:** | 98.1 | ac | |
| **Length (Lc)** | 5377 | ft | (Length of hydraulically longest watercourse) |
| **Length (Lca)** | 2800 | ft | (Length to center of watershed area along Lc) |

| **Change in Length Factors** | | | **Change in Slope Factors** | | |
|---|---|---|---|---|---|
| **Reach No.** | **Delta L** | **Delta $L^3$** | **Delta H** | **lta $L^3$/Delta** | **Slope** |
| **1** | 2464.00 | 1.50E+10 | 45.00 | 3.32E+08 | 1.83% |
| **2** | 389.00 | 5.89E+07 | 123.00 | 4.79E+05 | 31.62% |
| **3** | 2524.00 | 1.61E+10 | 10.00 | 1.61E+09 | 0.40% |
| Length Check OK | | | | | |

| | | | |
|---|---|---|---|
| | | | |
| **G Factor** | 59024 | | |
| **Mean Slope** | 0.0083 | | |
| | | | |
| **P(1,100)** | 3 | in | (Areally reduced 100 yr, 1hr rainfall depth) |

| **Basin Hydrologic Factors** | | | | | |
|---|---|---|---|---|---|
| | **Subarea 1** | **Subarea 2** | **Subarea 3** | **Weighted Parameters** | |
| **Watershed Type** | Nat | Nat | Nat | | |
| **Percent of A** | 10 | 15 | 75 | | 100 |
| **Basin Factor (Nb)** | 0.035 | 0.035 | 0.035 | **n Factor (N** | 0.035 |
| **Soil Types** | B | B | B | | |
| **Imperviousness (%)** | 3 | 3 | 3 | **Iw** | 3 |
| **Runoff Coefficient (Cw)** | 0.62 | 0.62 | 0.62 | **Cw** | 0.62 |

| **Results** | | | |
|---|---|---|---|
| **Time of Concentration** | 25.0 | min | (Calculated) |
| **Time of Concentration** | 25.0 | min | (Utilized) |
| **Rainfall Intensity (i100)** | 5.33 | in/hr | |
| **Q100** | 324.3 | cfs | |
| | | | |

| **Calc Q for other Return Intervals** | | |
|---|---|---|
| **Return Interval (yrs)** | **Ratio** | **Q(cfs)** |
| 2 | 0.05 | 16.2 |
| 5 | 0.2 | 64.9 |
| 10 | 0.35 | 113.5 |
| 25 | 0.55 | 178.3 |
| 50 | 0.75 | 243.2 |
| 100 | 1 | 324.3 |

Note: this result was not used, as the upstream downdrain introduces greater flows at the upstream end of the channel. 407.0 cfs was used.

# City of Tucson Hydrologic Data Sheet

Prepared by: CEB
Date: April 13, 2011
Checked by: GRB
Date: May 3, 2011

| | | | |
|---|---|---|---|
| **Project Name:** | Marana Regional | | |
| **Project Number:** | 090250 | | |
| **Concentration Point:** | East Downdrain | | |
| | | | |
| **Watershed Area:** | 75.27 | ac | |
| **Length (Lc)** | 2908 | ft | (Length of hydraulically longest watercourse) |
| **Length (Lca)** | 1148 | ft | (Length to center of watershed area along Lc) |

| **Change in Length Factors** | | | **Change in Slope Factors** | | |
|---|---|---|---|---|---|
| **Reach No.** | **Delta L** | **Delta $L^3$** | **Delta H** | **lta $L^3$/Delta** | **Slope** |
| **1** | 2494.00 | 1.55E+10 | 45.00 | 3.45E+08 | 1.80% |
| **2** | 207.00 | 8.87E+06 | 53.90 | 1.65E+05 | 26.04% |
| **3** | 207.00 | 8.87E+06 | 53.90 | 1.65E+05 | 26.04% |
| Length Check OK | | | | | |

| | | | |
|---|---|---|---|
| | | | |
| **G Factor** | 19378 | | |
| **Mean Slope** | 0.0225 | | |
| | | | |
| **P(1,100)** | 3 | in | (Areally reduced 100 yr, 1hr rainfall depth) |

| **Basin Hydrologic Factors** | | | | | |
|---|---|---|---|---|---|
| | **Subarea 1** | **Subarea 2** | **Subarea 3** | **Weighted Parameters** | |
| **Watershed Type** | Nat | Nat | Nat | | |
| **Percent of A** | 10 | 15 | 75 | | 100 |
| **Basin Factor (Nb)** | 0.035 | 0.035 | 0.035 | **n Factor (N** | 0.035 |
| **Soil Types** | B | B | B | | |
| **Imperviousness (%)** | 3 | 3 | 3 | **Iw** | 3 |
| **Runoff Coefficient (Cw)** | 0.62 | 0.62 | 0.62 | **Cw** | 0.62 |

| **Results** | | | |
|---|---|---|---|
| **Time of Concentration** | 9.0 | min | (Calculated) |
| **Time of Concentration** | 9.0 | min | (Utilized) |
| **Rainfall Intensity (i100)** | 8.29 | in/hr | |
| **Q100** | 386.7 | cfs | |
| | | | |

| **Calc Q for other Return Intervals** | | |
|---|---|---|
| **Return Interval (yrs)** | **Ratio** | **Q(cfs)** |
| 2 | 0.05 | 19.3 |
| 5 | 0.2 | 77.3 |
| 10 | 0.35 | 135.4 |
| 25 | 0.55 | 212.7 |
| 50 | 0.75 | 290.0 |
| 100 | 1 | 386.7 |

# City of Tucson Hydrologic Data Sheet

Prepared by: CEB
Date: April 13, 2011
Checked by: GRB
Date: May 3, 2011

| | | | |
|---|---|---|---|
| **Project Name:** | Marana Regional | | |
| **Project Number:** | 090250 | | |
| **Concentration Point:** | E1a | | |
| | | | |
| **Watershed Area:** | 0.96 | ac | |
| **Length (Lc)** | 350 | ft | (Length of hydraulically longest watercourse) |
| **Length (Lca)** | 175 | ft | (Length to center of watershed area along Lc) |

| **Change in Length Factors** | | | **Change in Slope Factors** | | |
|---|---|---|---|---|---|
| **Reach No.** | **Delta L** | **Delta $L^3$** | **Delta H** | **lta $L^3$/Delta** | **Slope** |
| **1** | 100.00 | 1.00E+06 | 0.32 | 3.13E+06 | 0.32% |
| **2** | 100.00 | 1.00E+06 | 0.32 | 3.13E+06 | 0.32% |
| **3** | 150.00 | 3.38E+06 | 0.48 | 7.03E+06 | 0.32% |
| Length Check OK | | | | | |

| | | | |
|---|---|---|---|
| | | | |
| **G Factor** | 6187 | | |
| **Mean Slope** | 0.0032 | | |
| | | | |
| **P(1,100)** | 3 | in | (Areally reduced 100 yr, 1hr rainfall depth) |

| **Basin Hydrologic Factors** | | | | | |
|---|---|---|---|---|---|
| | **Subarea 1** | **Subarea 2** | **Subarea 3** | **Weighted Parameters** | |
| **Watershed Type** | Nat | Nat | Nat | | |
| **Percent of A** | 10 | 15 | 75 | | 100 |
| **Basin Factor (Nb)** | 0.035 | 0.035 | 0.035 | **n Factor (N** | 0.035 |
| **Soil Types** | B | B | B | | |
| **Imperviousness (%)** | 3 | 3 | 3 | **Iw** | 3 |
| **Runoff Coefficient (Cw)** | 0.62 | 0.62 | 0.62 | **Cw** | 0.62 |

| **Results** | | | |
|---|---|---|---|
| **Time of Concentration** | 5.9 | min | (Calculated) |
| **Time of Concentration** | 5.9 | min | (Utilized) |
| **Rainfall Intensity (i100)** | 9.26 | in/hr | |
| **Q100** | 5.5 | cfs | |
| | | | |

| **Calc Q for other Return Intervals** | | |
|---|---|---|
| **Return Interval (yrs)** | **Ratio** | **Q(cfs)** |
| 2 | 0.05 | 0.3 |
| 5 | 0.2 | 1.1 |
| 10 | 0.35 | 1.9 |
| 25 | 0.55 | 3.0 |
| 50 | 0.75 | 4.1 |
| 100 | 1 | 5.5 |

## City of Tucson Hydrologic Data Sheet

Prepared by: CEB
Date: April 13, 2011
Checked by: GRB
Date: May 3, 2011

| | | | |
|---|---|---|---|
| **Project Name:** | Marana Regional | | |
| **Project Number:** | 090250 | | |
| **Concentration Point:** | E1b | | |
| | | | |
| **Watershed Area:** | 79.12 | ac | |
| **Length (Lc)** | 4872 | ft | (Length of hydraulically longest watercourse) |
| **Length (Lca)** | 2130 | ft | (Length to center of watershed area along Lc) |

| **Change in Length Factors** | | | **Change in Slope Factors** | | |
|---|---|---|---|---|---|
| **Reach No.** | **Delta L** | **Delta $L^3$** | **Delta H** | **lta $L^3$/Delta** | **Slope** |
| **1** | 2494.00 | 1.55E+10 | 20.00 | 7.76E+08 | 0.80% |
| **2** | 414.00 | 7.10E+07 | 107.80 | 6.58E+05 | 26.04% |
| **3** | 1964.00 | 7.58E+09 | 5.30 | 1.43E+09 | 0.27% |
| Length Check OK | | | | | |

| | | | |
|---|---|---|---|
| | | | |
| **G Factor** | 66469 | | |
| **Mean Slope** | 0.0054 | | |
| | | | |
| **P(1,100)** | 3 | in | (Areally reduced 100 yr, 1hr rainfall depth) |

| **Basin Hydrologic Factors** | | | | | |
|---|---|---|---|---|---|
| | **Subarea 1** | **Subarea 2** | **Subarea 3** | **Weighted Parameters** | |
| **Watershed Type** | Nat | Nat | Nat | | |
| **Percent of A** | 10 | 15 | 75 | | 100 |
| **Basin Factor (Nb)** | 0.035 | 0.035 | 0.035 | **n Factor (N** | 0.035 |
| **Soil Types** | B | B | B | | |
| **Imperviousness (%)** | 3 | 3 | 3 | **Iw** | 3 |
| **Runoff Coefficient (Cw)** | 0.62 | 0.62 | 0.62 | **Cw** | 0.62 |

| **Results** | | | |
|---|---|---|---|
| **Time of Concentration** | 27.2 | min | (Calculated) |
| **Time of Concentration** | 27.2 | min | (Utilized) |
| **Rainfall Intensity (i100)** | 5.09 | in/hr | |
| **Q100** | 249.5 | cfs | |
| | | | |

| **Calc Q for other Return Intervals** | | |
|---|---|---|
| **Return Interval (yrs)** | **Ratio** | **Q(cfs)** |
| 2 | 0.05 | 12.5 |
| 5 | 0.2 | 49.9 |
| 10 | 0.35 | 87.3 |
| 25 | 0.55 | 137.2 |
| 50 | 0.75 | 187.1 |
| 100 | 1 | 249.5 |

Note: this result was not used, as the adjacent downdrain introduces greater flows at the upstream end of the channel. 386.7 cfs was used.

## City of Tucson Hydrologic Data Sheet

Prepared by: CEB
Date: April 13, 2011
Checked by: GRB
Date: May 3, 2011

| | | | |
|---|---|---|---|
| **Project Name:** | Marana Regional | | |
| **Project Number:** | 090250 | | |
| **Concentration Point:** | East Downdrain 2 | | |
| | | | |
| **Watershed Area:** | 61.54 | ac | |
| **Length (Lc)** | 2807 | ft | (Length of hydraulically longest watercourse) |
| **Length (Lca)** | 1088 | ft | (Length to center of watershed area along Lc) |

| **Change in Length Factors** | | | **Change in Slope Factors** | | |
|---|---|---|---|---|---|
| **Reach No.** | **Delta L** | **Delta $L^3$** | **Delta H** | **elta $L^3$/Delta** | **Slope** |
| **1** | 2373.00 | 1.34E+10 | 45.00 | 2.97E+08 | 1.90% |
| **2** | 217.00 | 1.02E+07 | 64.85 | 1.58E+05 | 29.88% |
| **3** | 217.00 | 1.02E+07 | 64.85 | 1.58E+05 | 29.88% |
| Length Check OK | | | | | |

| | | | |
|---|---|---|---|
| **G Factor** | 18026 | | |
| **Mean Slope** | 0.0242 | | |
| | | | |
| **P(1,100)** | 3 | in | (Areally reduced 100 yr, 1hr rainfall depth) |

| **Basin Hydrologic Factors** | | | | | |
|---|---|---|---|---|---|
| | **Subarea 1** | **Subarea 2** | **Subarea 3** | **Weighted Parameters** | |
| **Watershed Type** | Nat | Nat | Nat | | |
| **Percent of A** | 10 | 15 | 75 | | 100 |
| **Basin Factor (Nb)** | 0.035 | 0.035 | 0.035 | **in Factor (N** | 0.035 |
| **Soil Types** | B | B | B | | |
| **Imperviousness (%)** | 3 | 3 | 3 | **Iw** | 3 |
| **Runoff Coefficient (Cw)** | 0.62 | 0.62 | 0.62 | **Cw** | 0.62 |

| **Results** | | | |
|---|---|---|---|
| **Time of Concentration** | 8.4 | min | (Calculated) |
| **Time of Concentration** | 8.4 | min | (Utilized) |
| **Rainfall Intensity (i100)** | 8.44 | in/hr | |
| **Q100** | 321.9 | cfs | |

| **Calc Q for other Return Intervals** | | |
|---|---|---|
| **Return Interval (yrs)** | **Ratio** | **Q(cfs)** |
| 2 | 0.05 | 16.1 |
| 5 | 0.2 | 64.4 |
| 10 | 0.35 | 112.7 |
| 25 | 0.55 | 177.1 |
| 50 | 0.75 | 241.5 |
| 100 | 1 | 321.9 |

## City of Tucson Hydrologic Data Sheet

Prepared by: CEB
Date: April 13, 2011
Checked by: GRB
Date: May 3, 2011

| | | | |
|---|---|---|---|
| **Project Name:** | Marana Regional | | |
| **Project Number:** | 090250 | | |
| **Concentration Point:** | E2a | | |
| | | | |
| **Watershed Area:** | 149.17 | ac | |
| **Length (Lc)** | 6260 | ft | (Length of hydraulically longest watercourse) |
| **Length (Lca)** | 3646 | ft | (Length to center of watershed area along Lc) |

| **Change in Length Factors** | | | **Change in Slope Factors** | | |
|---|---|---|---|---|---|
| **Reach No.** | **Delta L** | **Delta $L^3$** | **Delta H** | **elta $L^3$/Delta** | **Slope** |
| **1** | 1882.00 | 6.67E+09 | 20.00 | 3.33E+08 | 1.06% |
| **2** | 414.00 | 7.10E+07 | 107.80 | 6.58E+05 | 26.04% |
| **3** | 3964.00 | 6.23E+10 | 11.20 | 5.56E+09 | 0.28% |
| Length Check OK | | | | | |

| | | | |
|---|---|---|---|
| | | | |
| **G Factor** | 93642 | | |
| **Mean Slope** | 0.0045 | | |
| | | | |
| **P(1,100)** | 3 | in | (Areally reduced 100 yr, 1hr rainfall depth) |

| **Basin Hydrologic Factors** | | | | | |
|---|---|---|---|---|---|
| | **Subarea 1** | **Subarea 2** | **Subarea 3** | **Weighted Parameters** | |
| **Watershed Type** | Nat | Nat | Nat | | |
| **Percent of A** | 10 | 15 | 75 | | 100 |
| **Basin Factor (Nb)** | 0.035 | 0.035 | 0.035 | **in Factor (N** | 0.035 |
| **Soil Types** | B | B | B | | |
| **Imperviousness (%)** | 3 | 3 | 3 | **Iw** | 3 |
| **Runoff Coefficient (Cw)** | 0.62 | 0.62 | 0.62 | **Cw** | 0.62 |

| **Results** | | | |
|---|---|---|---|
| **Time of Concentration** | 41.6 | min | (Calculated) |
| **Time of Concentration** | 41.6 | min | (Utilized) |
| **Rainfall Intensity (i100)** | 3.90 | in/hr | |
| **Q100** | 360.4 | cfs | |
| | | | |

| **Calc Q for other Return Intervals** | | |
|---|---|---|
| **Return Interval (yrs)** | **Ratio** | **Q(cfs)** |
| 2 | 0.05 | 18.0 |
| 5 | 0.2 | 72.1 |
| 10 | 0.35 | 126.1 |
| 25 | 0.55 | 198.2 |
| 50 | 0.75 | 270.3 |
| 100 | 1 | 360.4 |

Note: this result was not used, as an upstream downdrain introduces greater flows into the channel. 386.7 cfs was used.

# City of Tucson Hydrologic Data Sheet

Prepared by: CEB
Date: April 13, 2011
Checked by: GRB
Date: May 3, 2011

| | | | |
|---|---|---|---|
| **Project Name:** | Marana Regional | | |
| **Project Number:** | 090250 | | |
| **Concentration Point:** | East Downdrain 3 | | |
| | | | |
| **Watershed Area:** | 38.63 | ac | |
| **Length (Lc)** | 1147 | ft | (Length of hydraulically longest watercourse) |
| **Length (Lca)** | 573.5 | ft | (Length to center of watershed area along Lc) |

| **Change in Length Factors** | | | **Change in Slope Factors** | | |
|---|---|---|---|---|---|
| **Reach No.** | **Delta L** | **Delta $L^3$** | **Delta H** | **lta $L^3$/Delta** | **Slope** |
| **1** | 680.00 | 3.14E+08 | 35.00 | 8.98E+06 | 5.15% |
| **2** | 233.50 | 1.27E+07 | 77.25 | 1.65E+05 | 33.08% |
| **3** | 233.50 | 1.27E+07 | 77.25 | 1.65E+05 | 33.08% |
| Length Check OK | | | | | |

| | | | |
|---|---|---|---|
| | | | |
| **G Factor** | 3809 | | |
| **Mean Slope** | 0.0907 | | |
| | | | |
| **P(1,100)** | 3 | in | (Areally reduced 100 yr, 1hr rainfall depth) |

| **Basin Hydrologic Factors** | | | | | |
|---|---|---|---|---|---|
| | **Subarea 1** | **Subarea 2** | **Subarea 3** | **Weighted Parameters** | |
| **Watershed Type** | Nat | Nat | Nat | | |
| **Percent of A** | 10 | 15 | 75 | | 100 |
| **Basin Factor (Nb)** | 0.035 | 0.035 | 0.035 | **n Factor (N** | 0.035 |
| **Soil Types** | B | B | B | | |
| **Imperviousness (%)** | 3 | 3 | 3 | **Iw** | 3 |
| **Runoff Coefficient (Cw)** | 0.62 | 0.62 | 0.62 | **Cw** | 0.62 |

| **Results** | | | |
|---|---|---|---|
| **Time of Concentration** | 3.6 | min | (Calculated) |
| **Time of Concentration** | 5.0 | min | (Utilized) |
| **Rainfall Intensity (i100)** | 9.60 | in/hr | |
| **Q100** | 229.9 | cfs | |
| | | | |

| **Calc Q for other Return Intervals** | | |
|---|---|---|
| **Return Interval (yrs)** | **Ratio** | **Q(cfs)** |
| 2 | 0.05 | 11.5 |
| 5 | 0.2 | 46.0 |
| 10 | 0.35 | 80.5 |
| 25 | 0.55 | 126.5 |
| 50 | 0.75 | 172.4 |
| 100 | 1 | 229.9 |

## City of Tucson Hydrologic Data Sheet

Prepared by: CEB
Date: April 13, 2011
Checked by: GRB
Date: May 3, 2011

| | | | |
|---|---|---|---|
| **Project Name:** | Marana Regional | | |
| **Project Number:** | 090250 | | |
| **Concentration Point:** | E3a | | |
| | | | |
| **Watershed Area:** | 189.62 | ac | |
| **Length (Lc)** | 6899 | ft | (Length of hydraulically longest watercourse) |
| **Length (Lca)** | 3646 | ft | (Length to center of watershed area along Lc) |

| **Change in Length Factors** | | | **Change in Slope Factors** | | |
|---|---|---|---|---|---|
| **Reach No.** | **Delta L** | **Delta $L^3$** | **Delta H** | **lta $L^3$/Delta** | **Slope** |
| **1** | 1882.00 | 6.67E+09 | 20.00 | 3.33E+08 | 1.06% |
| **2** | 414.00 | 7.10E+07 | 107.80 | 6.58E+05 | 26.04% |
| **3** | 4603.00 | 9.75E+10 | 13.75 | 7.09E+09 | 0.30% |
| Length Check OK | | | | | |

| | | | |
|---|---|---|---|
| **G Factor** | 103287 | | |
| **Mean Slope** | 0.0045 | | |
| | | | |
| **P(1,100)** | 3 | in | (Areally reduced 100 yr, 1hr rainfall depth) |

| **Basin Hydrologic Factors** | | | | | |
|---|---|---|---|---|---|
| | **Subarea 1** | **Subarea 2** | **Subarea 3** | **Weighted Parameters** | |
| **Watershed Type** | Nat | Nat | Nat | | |
| **Percent of A** | 10 | 15 | 75 | | 100 |
| **Basin Factor (Nb)** | 0.035 | 0.035 | 0.035 | **n Factor (N** | 0.035 |
| **Soil Types** | B | B | B | | |
| **Imperviousness (%)** | 3 | 3 | 3 | **Iw** | 3 |
| **Runoff Coefficient (Cw)** | 0.62 | 0.62 | 0.62 | **Cw** | 0.62 |

| **Results** | | | |
|---|---|---|---|
| **Time of Concentration** | 43.4 | min | (Calculated) |
| **Time of Concentration** | 43.4 | min | (Utilized) |
| **Rainfall Intensity (i100)** | 3.79 | in/hr | |
| **Q100** | 445.3 | cfs | |

| **Calc Q for other Return Intervals** | | |
|---|---|---|
| **Return Interval (yrs)** | **Ratio** | **Q(cfs)** |
| 2 | 0.05 | 22.3 |
| 5 | 0.2 | 89.1 |
| 10 | 0.35 | 155.8 |
| 25 | 0.55 | 244.9 |
| 50 | 0.75 | 334.0 |
| 100 | 1 | 445.3 |

## City of Tucson Hydrologic Data Sheet

Prepared by: CEB
Date: April 13, 2011
Checked by: GRB
Date: May 3, 2011

| | | | |
|---|---|---|---|
| **Project Name:** | Marana Regional | | |
| **Project Number:** | 090250 | | |
| **Concentration Point:** | E4a | | |
| | | | |
| **Watershed Area:** | 1.78 | ac | |
| **Length (Lc)** | 600 | ft | (Length of hydraulically longest watercourse) |
| **Length (Lca)** | 300 | ft | (Length to center of watershed area along Lc) |

| **Change in Length Factors** | | | **Change in Slope Factors** | | |
|---|---|---|---|---|---|
| **Reach No.** | **Delta L** | **Delta $L^3$** | **Delta H** | **lta $L^3$/Delta** | **Slope** |
| **1** | 200.00 | 8.00E+06 | 1.83 | 4.36E+06 | 0.92% |
| **2** | 200.00 | 8.00E+06 | 1.83 | 4.36E+06 | 0.92% |
| **3** | 200.00 | 8.00E+06 | 1.83 | 4.36E+06 | 0.92% |
| Length Check OK | | | | | |

| | | | |
|---|---|---|---|
| **G Factor** | 6267 | | |
| **Mean Slope** | 0.0092 | | |
| | | | |
| **P(1,100)** | 3 | in | (Areally reduced 100 yr, 1hr rainfall depth) |

| **Basin Hydrologic Factors** | | | | | |
|---|---|---|---|---|---|
| | **Subarea 1** | **Subarea 2** | **Subarea 3** | **Weighted Parameters** | |
| **Watershed Type** | Nat | Nat | Nat | | |
| **Percent of A** | 10 | 15 | 75 | | 100 |
| **Basin Factor (Nb)** | 0.035 | 0.035 | 0.035 | **n Factor (N** | 0.035 |
| **Soil Types** | B | B | B | | |
| **Imperviousness (%)** | 3 | 3 | 3 | **Iw** | 3 |
| **Runoff Coefficient (Cw)** | 0.62 | 0.62 | 0.62 | **Cw** | 0.62 |

| **Results** | | | |
|---|---|---|---|
| **Time of Concentration** | 5.4 | min | (Calculated) |
| **Time of Concentration** | 5.4 | min | (Utilized) |
| **Rainfall Intensity (i100)** | 9.44 | in/hr | |
| **Q100** | 10.4 | cfs | |

| **Calc Q for other Return Intervals** | | |
|---|---|---|
| **Return Interval (yrs)** | **Ratio** | **Q(cfs)** |
| 2 | 0.05 | 0.5 |
| 5 | 0.2 | 2.1 |
| 10 | 0.35 | 3.6 |
| 25 | 0.55 | 5.7 |
| 50 | 0.75 | 7.8 |
| 100 | 1 | 10.4 |

# City of Tucson Hydrologic Data Sheet

Prepared by: CEB
Date: April 13, 2011
Checked by: GRB
Date: May 3, 2011

| | | | |
|---|---|---|---|
| **Project Name:** | Marana Regional | | |
| **Project Number:** | 090250 | | |
| **Concentration Point:** | E4b | | |
| | | | |
| **Watershed Area:** | 3.82 | ac | |
| **Length (Lc)** | 986 | ft | (Length of hydraulically longest watercourse) |
| **Length (Lca)** | 486 | ft | (Length to center of watershed area along Lc) |

| **Change in Length Factors** | | | **Change in Slope Factors** | | |
|---|---|---|---|---|---|
| **Reach No.** | **Delta L** | **Delta $L^3$** | **Delta H** | **lta $L^3$/Delta** | **Slope** |
| **1** | 328.00 | 3.53E+07 | 3.50 | 1.01E+07 | 1.07% |
| **2** | 329.00 | 3.56E+07 | 3.50 | 1.02E+07 | 1.06% |
| **3** | 329.00 | 3.56E+07 | 3.50 | 1.02E+07 | 1.06% |
| Length Check OK | | | | | |

| | | | |
|---|---|---|---|
| | | | |
| **G Factor** | 9555 | | |
| **Mean Slope** | 0.0106 | | |
| | | | |
| **P(1,100)** | 3 | in | (Areally reduced 100 yr, 1hr rainfall depth) |

| **Basin Hydrologic Factors** | | | | | |
|---|---|---|---|---|---|
| | **Subarea 1** | **Subarea 2** | **Subarea 3** | **Weighted Parameters** | |
| **Watershed Type** | Nat | Nat | Nat | | |
| **Percent of A** | 10 | 15 | 75 | | 100 |
| **Basin Factor (Nb)** | 0.035 | 0.035 | 0.035 | **n Factor (N** | 0.035 |
| **Soil Types** | B | B | B | | |
| **Imperviousness (%)** | 3 | 3 | 3 | **Iw** | 3 |
| **Runoff Coefficient (Cw)** | 0.62 | 0.62 | 0.62 | **Cw** | 0.62 |

| **Results** | | | |
|---|---|---|---|
| **Time of Concentration** | 6.7 | min | (Calculated) |
| **Time of Concentration** | 6.7 | min | (Utilized) |
| **Rainfall Intensity (i100)** | 8.98 | in/hr | |
| **Q100** | 21.3 | cfs | |

| **Calc Q for other Return Intervals** | | |
|---|---|---|
| **Return Interval (yrs)** | **Ratio** | **Q(cfs)** |
| 2 | 0.05 | 1.1 |
| 5 | 0.2 | 4.3 |
| 10 | 0.35 | 7.4 |
| 25 | 0.55 | 11.7 |
| 50 | 0.75 | 16.0 |
| 100 | 1 | 21.3 |

# City of Tucson Hydrologic Data Sheet

Prepared by: CEB
Date: April 15, 2011
Checked by: GRB
Date: May 3, 2011

| | | | |
|---|---|---|---|
| **Project Name:** | Marana Regional | | |
| **Project Number:** | 090250 | | |
| **Concentration Point:** | West Downdrain 1 | | |
| | | | |
| **Watershed Area:** | 56.86 | ac | |
| **Length (Lc)** | 1918 | ft | (Length of hydraulically longest watercourse) |
| **Length (Lca)** | 955 | ft | (Length to center of watershed area along Lc) |

| **Change in Length Factors** | | | **Change in Slope Factors** | | |
|---|---|---|---|---|---|
| **Reach No.** | **Delta L** | **Delta $L^3$** | **Delta H** | **lta $L^3$/Delta** | **Slope** |
| **1** | 588.00 | 2.03E+08 | 25.00 | 8.13E+06 | 4.25% |
| **2** | 910.00 | 7.54E+08 | 20.00 | 3.77E+07 | 2.20% |
| **3** | 420.00 | 7.41E+07 | 135.00 | 5.49E+05 | 32.14% |
| Length Check OK | | | | | |

| | | | |
|---|---|---|---|
| | | | |
| **G Factor** | 9731 | | |
| **Mean Slope** | 0.0389 | | |
| | | | |
| **P(1,100)** | 3 | in | (Areally reduced 100 yr, 1hr rainfall depth) |

| **Basin Hydrologic Factors** | | | | | |
|---|---|---|---|---|---|
| | **Subarea 1** | **Subarea 2** | **Subarea 3** | **Weighted Parameters** | |
| **Watershed Type** | Nat | Nat | Nat | | |
| **Percent of A** | 80 | 10 | 10 | | 100 |
| **Basin Factor (Nb)** | 0.055 | 0.035 | 0.035 | **n Factor (N** | 0.040861111 |
| **Soil Types** | B | B | B | | |
| **Imperviousness (%)** | 3 | 3 | 3 | **Iw** | 3 |
| **Runoff Coefficient (Cw)** | 0.62 | 0.62 | 0.62 | **Cw** | 0.62 |

| **Results** | | | |
|---|---|---|---|
| **Time of Concentration** | 7.0 | min | (Calculated) |
| **Time of Concentration** | 7.0 | min | (Utilized) |
| **Rainfall Intensity (i100)** | 8.89 | in/hr | |
| **Q100** | 313.6 | cfs | |
| | | | |

| **Calc Q for other Return Intervals** | | |
|---|---|---|
| **Return Interval (yrs)** | **Ratio** | **Q(cfs)** |
| 2 | 0.05 | 15.7 |
| 5 | 0.2 | 62.7 |
| 10 | 0.35 | 109.7 |
| 25 | 0.55 | 172.5 |
| 50 | 0.75 | 235.2 |
| 100 | 1 | 313.6 |

# City of Tucson Hydrologic Data Sheet

Prepared by: CEB
Date: April 13, 2011
Checked by: GRB
Date: May 3, 2011

| | | | |
|---|---|---|---|
| **Project Name:** | Marana Regional | | |
| **Project Number:** | 090250 | | |
| **Concentration Point:** | W1a | | |
| | | | |
| **Watershed Area:** | 58.39 | ac | |
| **Length (Lc)** | 2498 | ft | (Length of hydraulically longest watercourse) |
| **Length (Lca)** | 265 | ft | (Length to center of watershed area along Lc) |

| **Change in Length Factors** | | | **Change in Slope Factors** | | |
|---|---|---|---|---|---|
| **Reach No.** | **Delta L** | **Delta $L^3$** | **Delta H** | **elta $L^3$/Delta** | **Slope** |
| **1** | 1498.00 | 3.36E+09 | 45.00 | 7.47E+07 | 3.00% |
| **2** | 420.00 | 7.41E+07 | 135.00 | 5.49E+05 | 32.14% |
| **3** | 580.00 | 1.95E+08 | 2.00 | 9.76E+07 | 0.34% |
| Length Check OK | | | | | |

| | | | |
|---|---|---|---|
| **G Factor** | 19261 | | |
| **Mean Slope** | 0.0168 | | |
| | | | |
| **P(1,100)** | 3 | in | (Areally reduced 100 yr, 1hr rainfall depth) |

| **Basin Hydrologic Factors** | | | | | |
|---|---|---|---|---|---|
| | **Subarea 1** | **Subarea 2** | **Subarea 3** | **Weighted Parameters** | |
| **Watershed Type** | Nat | Nat | Nat | | |
| **Percent of A** | 10 | 15 | 75 | | 100 |
| **Basin Factor (Nb)** | 0.035 | 0.035 | 0.035 | **in Factor (N** | 0.035 |
| **Soil Types** | B | B | B | | |
| **Imperviousness (%)** | 3 | 3 | 3 | **Iw** | 3 |
| **Runoff Coefficient (Cw)** | 0.62 | 0.62 | 0.62 | **Cw** | 0.62 |

| **Results** | | | |
|---|---|---|---|
| **Time of Concentration** | 6.2 | min | (Calculated) |
| **Time of Concentration** | 6.2 | min | (Utilized) |
| **Rainfall Intensity (i100)** | 9.16 | in/hr | |
| **Q100** | 331.7 | cfs | |

| **Calc Q for other Return Intervals** | | |
|---|---|---|
| **Return Interval (yrs)** | **Ratio** | **Q(cfs)** |
| 2 | 0.05 | 16.6 |
| 5 | 0.2 | 66.3 |
| 10 | 0.35 | 116.1 |
| 25 | 0.55 | 182.4 |
| 50 | 0.75 | 248.8 |
| 100 | 1 | 331.7 |

## City of Tucson Hydrologic Data Sheet

Prepared by: CEB
Date: April 13, 2011
Checked by: GRB
Date: May 3, 2011

| | | | |
|---|---|---|---|
| **Project Name:** | Marana Regional | | |
| **Project Number:** | 090250 | | |
| **Concentration Point:** | W1b | | |
| | | | |
| **Watershed Area:** | 1.27 | ac | |
| **Length (Lc)** | 598 | ft | (Length of hydraulically longest watercourse) |
| **Length (Lca)** | 299 | ft | (Length to center of watershed area along Lc) |

| **Change in Length Factors** | | | **Change in Slope Factors** | | |
|---|---|---|---|---|---|
| **Reach No.** | **Delta L** | **Delta $L^3$** | **Delta H** | **elta $L^3$/Delta** | **Slope** |
| **1** | 199.00 | 7.88E+06 | 0.33 | 2.39E+07 | 0.17% |
| **2** | 199.00 | 7.88E+06 | 0.33 | 2.39E+07 | 0.17% |
| **3** | 200.00 | 8.00E+06 | 0.33 | 2.42E+07 | 0.17% |
| Length Check OK | | | | | |

| | | | |
|---|---|---|---|
| | | | |
| **G Factor** | 14697 | | |
| **Mean Slope** | 0.0017 | | |
| | | | |
| **P(1,100)** | 3 | in | (Areally reduced 100 yr, 1hr rainfall depth) |

| **Basin Hydrologic Factors** | | | | | |
|---|---|---|---|---|---|
| | **Subarea 1** | **Subarea 2** | **Subarea 3** | **Weighted Parameters** | |
| **Watershed Type** | Nat | Nat | Nat | | |
| **Percent of A** | 10 | 15 | 75 | | 100 |
| **Basin Factor (Nb)** | 0.035 | 0.035 | 0.035 | **in Factor (N** | 0.035 |
| **Soil Types** | B | B | B | | |
| **Imperviousness (%)** | 3 | 3 | 3 | **Iw** | 3 |
| **Runoff Coefficient (Cw)** | 0.62 | 0.62 | 0.62 | **Cw** | 0.62 |

| **Results** | | | |
|---|---|---|---|
| **Time of Concentration** | 10.8 | min | (Calculated) |
| **Time of Concentration** | 10.8 | min | (Utilized) |
| **Rainfall Intensity (i100)** | 7.80 | in/hr | |
| **Q100** | 6.1 | cfs | |
| | | | |

| **Calc Q for other Return Intervals** | | |
|---|---|---|
| **Return Interval (yrs)** | **Ratio** | **Q(cfs)** |
| 2 | 0.05 | 0.3 |
| 5 | 0.2 | 1.2 |
| 10 | 0.35 | 2.2 |
| 25 | 0.55 | 3.4 |
| 50 | 0.75 | 4.6 |
| 100 | 1 | 6.1 |

## City of Tucson Hydrologic Data Sheet

Prepared by: CEB
Date: April 13, 2011
Checked by: GRB
Date: May 3, 2011

| | | | |
|---|---|---|---|
| **Project Name:** | Marana Regional | | |
| **Project Number:** | 090250 | | |
| **Concentration Point:** | W2a | | |
| | | | |
| **Watershed Area:** | 14.11 | ac | |
| **Length (Lc)** | 3987 | ft | (Length of hydraulically longest watercourse) |
| **Length (Lca)** | 1995 | ft | (Length to center of watershed area along Lc) |

| **Change in Length Factors** | | | **Change in Slope Factors** | | |
|---|---|---|---|---|---|
| **Reach No.** | **Delta L** | **Delta $L^3$** | **Delta H** | **elta $L^3$/Delta** | **Slope** |
| **1** | 1329.00 | 2.35E+09 | 7.00 | 3.35E+08 | 0.53% |
| **2** | 1329.00 | 2.35E+09 | 7.00 | 3.35E+08 | 0.53% |
| **3** | 1329.00 | 2.35E+09 | 7.50 | 3.13E+08 | 0.56% |
| Length Check OK | | | | | |

| | | | |
|---|---|---|---|
| **G Factor** | 54315 | | |
| **Mean Slope** | 0.0054 | | |
| | | | |
| **P(1,100)** | 3 | in | (Areally reduced 100 yr, 1hr rainfall depth) |

| **Basin Hydrologic Factors** | | | | | |
|---|---|---|---|---|---|
| | **Subarea 1** | **Subarea 2** | **Subarea 3** | **Weighted Parameters** | |
| **Watershed Type** | Nat | Nat | Nat | | |
| **Percent of A** | 10 | 15 | 75 | | 100 |
| **Basin Factor (Nb)** | 0.035 | 0.035 | 0.035 | **in Factor (N** | 0.035 |
| **Soil Types** | B | B | B | | |
| **Imperviousness (%)** | 3 | 3 | 3 | **Iw** | 3 |
| **Runoff Coefficient (Cw)** | 0.62 | 0.62 | 0.62 | **Cw** | 0.62 |

| **Results** | | | |
|---|---|---|---|
| **Time of Concentration** | 24.4 | min | (Calculated) |
| **Time of Concentration** | 24.4 | min | (Utilized) |
| **Rainfall Intensity (i100)** | 5.40 | in/hr | |
| **Q100** | 47.3 | cfs | |

| **Calc Q for other Return Intervals** | | |
|---|---|---|
| **Return Interval (yrs)** | **Ratio** | **Q(cfs)** |
| 2 | 0.05 | 2.4 |
| 5 | 0.2 | 9.5 |
| 10 | 0.35 | 16.5 |
| 25 | 0.55 | 26.0 |
| 50 | 0.75 | 35.5 |
| 100 | 1 | 47.3 |

## City of Tucson Hydrologic Data Sheet

Prepared by: CEB
Date: April 13, 2011
Checked by: GRB
Date: May 3, 2011

| | | | |
|---|---|---|---|
| **Project Name:** | Marana Regional | | |
| **Project Number:** | 090250 | | |
| **Concentration Point:** | W2a1 | | |
| | | | |
| **Watershed Area:** | 7.86 | ac | |
| **Length (Lc)** | 2280 | ft | (Length of hydraulically longest watercourse) |
| **Length (Lca)** | 1140 | ft | (Length to center of watershed area along Lc) |

| **Change in Length Factors** | | | **Change in Slope Factors** | | |
|---|---|---|---|---|---|
| **Reach No.** | **Delta L** | **Delta $L^3$** | **Delta H** | **elta $L^3$/Delta** | **Slope** |
| **1** | 62.00 | 2.38E+05 | 18.33 | 1.30E+04 | ##### |
| **2** | 1109.00 | 1.36E+09 | 6.80 | 2.01E+08 | 0.61% |
| **3** | 1109.00 | 1.36E+09 | 6.84 | 1.99E+08 | 0.62% |
| Length Check OK | | | | | |

| | | | |
|---|---|---|---|
| **G Factor** | 28398 | | |
| **Mean Slope** | 0.0064 | | |
| | | | |
| **P(1,100)** | 3 | in | (Areally reduced 100 yr, 1hr rainfall depth) |

| **Basin Hydrologic Factors** | | | | | |
|---|---|---|---|---|---|
| | **Subarea 1** | **Subarea 2** | **Subarea 3** | **Veighted Parameter** | |
| **Watershed Type** | Nat | Nat | Nat | | |
| **Percent of A** | 10 | 15 | 75 | | 100 |
| **Basin Factor (Nb)** | 0.035 | 0.035 | 0.035 | **in Factor (N** | 0.035 |
| **Soil Types** | B | B | B | | |
| **Imperviousness (%)** | 3 | 3 | 3 | **Iw** | 3 |
| **Runoff Coefficient (Cw)** | 0.62 | 0.62 | 0.62 | **Cw** | 0.62 |

| **Results** | | | |
|---|---|---|---|
| **Time of Concentration** | 14.6 | min | (Calculated) |
| **Time of Concentration** | 14.6 | min | (Utilized) |
| **Rainfall Intensity (i100)** | 6.94 | in/hr | |
| **Q100** | 33.8 | cfs | |

| **Calc Q for other Return Intervals** | | |
|---|---|---|
| **Return Interval (yrs)** | **Ratio** | **Q(cfs)** |
| 2 | 0.05 | 1.7 |
| 5 | 0.2 | 6.8 |
| 10 | 0.35 | 11.8 |
| 25 | 0.55 | 18.6 |
| 50 | 0.75 | 25.4 |
| 100 | 1 | 33.8 |

# City of Tucson Hydrologic Data Sheet

Prepared by: CEB
Date: April 13, 2011
Checked by: GRB
Date: May 3, 2011

| | | | |
|---|---|---|---|
| **Project Name:** | Marana Regional | | |
| **Project Number:** | 090250 | | |
| **Concentration Point:** | W2b | | |
| | | | |
| **Watershed Area:** | 106.36 | ac | |
| **Length (Lc)** | 3967 | ft | (Length of hydraulically longest watercourse) |
| **Length (Lca)** | 2000 | ft | (Length to center of watershed area along Lc) |

| **Change in Length Factors** | | | **Change in Slope Factors** | | |
|---|---|---|---|---|---|
| **Reach No.** | **Delta L** | **Delta $L^3$** | **Delta H** | **elta $L^3$/Delta** | **Slope** |
| **1** | 2454.00 | 1.48E+10 | 45.00 | 3.28E+08 | 1.83% |
| **2** | 446.00 | 8.87E+07 | 130.40 | 6.80E+05 | 29.24% |
| **3** | 1067.00 | 1.21E+09 | 11.00 | 1.10E+08 | 1.03% |
| Length Check OK | | | | | |

| | | | |
|---|---|---|---|
| | | | |
| **G Factor** | 29456 | | |
| **Mean Slope** | 0.0181 | | |
| | | | |
| **P(1,100)** | 3 | in | (Areally reduced 100 yr, 1hr rainfall depth) |

| **Basin Hydrologic Factors** | | | | | |
|---|---|---|---|---|---|
| | **Subarea 1** | **Subarea 2** | **Subarea 3** | **Weighted Parameters** | |
| **Watershed Type** | Nat | Nat | Nat | | |
| **Percent of A** | 10 | 15 | 75 | | 100 |
| **Basin Factor (Nb)** | 0.035 | 0.035 | 0.035 | **in Factor (N** | 0.035 |
| **Soil Types** | B | B | B | | |
| **Imperviousness (%)** | 3 | 3 | 3 | **Iw** | 3 |
| **Runoff Coefficient (Cw)** | 0.62 | 0.62 | 0.62 | **Cw** | 0.62 |

| **Results** | | | |
|---|---|---|---|
| **Time of Concentration** | 13.3 | min | (Calculated) |
| **Time of Concentration** | 13.3 | min | (Utilized) |
| **Rainfall Intensity (i100)** | 7.22 | in/hr | |
| **Q100** | 476.0 | cfs | |
| | | | |

| **Calc Q for other Return Intervals** | | |
|---|---|---|
| **Return Interval (yrs)** | **Ratio** | **Q(cfs)** |
| 2 | 0.05 | 23.8 |
| 5 | 0.2 | 95.2 |
| 10 | 0.35 | 166.6 |
| 25 | 0.55 | 261.8 |
| 50 | 0.75 | 357.0 |
| 100 | 1 | 476.0 |

## City of Tucson Hydrologic Data Sheet

Prepared by: CEB
Date: April 13, 2011
Checked by: GRB
Date: May 3, 2011

| | | | |
|---|---|---|---|
| **Project Name:** | Marana Regional | | |
| **Project Number:** | 090250 | | |
| **Concentration Point:** | W2c | | |
| | | | |
| **Watershed Area:** | 1.97 | ac | |
| **Length (Lc)** | 420 | ft | (Length of hydraulically longest watercourse) |
| **Length (Lca)** | 210 | ft | (Length to center of watershed area along Lc) |

| **Change in Length Factors** | | | **Change in Slope Factors** | | |
|---|---|---|---|---|---|
| **Reach No.** | **Delta L** | **Delta $L^3$** | **Delta H** | **elta $L^3$/Delta** | **Slope** |
| **1** | 140.00 | 2.74E+06 | 1.20 | 2.29E+06 | 0.86% |
| **2** | 140.00 | 2.74E+06 | 1.20 | 2.29E+06 | 0.86% |
| **3** | 140.00 | 2.74E+06 | 1.20 | 2.29E+06 | 0.86% |
| Length Check OK | | | | | |

| | | | |
|---|---|---|---|
| **G Factor** | 4537 | | |
| **Mean Slope** | 0.0086 | | |
| | | | |
| **P(1,100)** | 3 | in | (Areally reduced 100 yr, 1hr rainfall depth) |

| **Basin Hydrologic Factors** | | | | | |
|---|---|---|---|---|---|
| | **Subarea 1** | **Subarea 2** | **Subarea 3** | **Weighted Parameters** | |
| **Watershed Type** | Nat | Nat | Nat | | |
| **Percent of A** | 10 | 15 | 75 | | 100 |
| **Basin Factor (Nb)** | 0.035 | 0.035 | 0.035 | **in Factor (N** | 0.035 |
| **Soil Types** | B | B | B | | |
| **Imperviousness (%)** | 3 | 3 | 3 | **Iw** | 3 |
| **Runoff Coefficient (Cw)** | 0.62 | 0.62 | 0.62 | **Cw** | 0.62 |

| **Results** | | | |
|---|---|---|---|
| **Time of Concentration** | 4.6 | min | (Calculated) |
| **Time of Concentration** | 5.0 | min | (Utilized) |
| **Rainfall Intensity (i100)** | 9.60 | in/hr | |
| **Q100** | 11.7 | cfs | |

| **Calc Q for other Return Intervals** | | |
|---|---|---|
| **Return Interval (yrs)** | **Ratio** | **Q(cfs)** |
| 2 | 0.05 | 0.6 |
| 5 | 0.2 | 2.3 |
| 10 | 0.35 | 4.1 |
| 25 | 0.55 | 6.4 |
| 50 | 0.75 | 8.8 |
| 100 | 1 | 11.7 |

## City of Tucson Hydrologic Data Sheet

Prepared by: CEB
Date: April 13, 2011
Checked by: GRB
Date: May 3, 2011

| | | | |
|---|---|---|---|
| **Project Name:** | Marana Regional | | |
| **Project Number:** | 090250 | | |
| **Concentration Point:** | West Downdrain 2 | | |
| | | | |
| **Watershed Area:** | 87.84 | ac | |
| **Length (Lc)** | 2889 | ft | (Length of hydraulically longest watercourse) |
| **Length (Lca)** | 1445 | ft | (Length to center of watershed area along Lc) |

| **Change in Length Factors** | | | **Change in Slope Factors** | | |
|---|---|---|---|---|---|
| **Reach No.** | **Delta L** | **Delta $L^3$** | **Delta H** | **elta $L^3$/Delta** | **Slope** |
| **1** | 620.00 | 2.38E+08 | 25.00 | 9.53E+06 | 4.03% |
| **2** | 1860.00 | 6.43E+09 | 20.00 | 3.22E+08 | 1.08% |
| **3** | 409.00 | 6.84E+07 | 135.00 | 5.07E+05 | 33.01% |
| Length Check OK | | | | | |

| | | | |
|---|---|---|---|
| **G Factor** | 21737 | | |
| **Mean Slope** | 0.0177 | | |
| | | | |
| **P(1,100)** | 3 | in | (Areally reduced 100 yr, 1hr rainfall depth) |

| **Basin Hydrologic Factors** | | | | | |
|---|---|---|---|---|---|
| | **Subarea 1** | **Subarea 2** | **Subarea 3** | **Weighted Parameters** | |
| **Watershed Type** | Nat | Nat | Nat | | |
| **Percent of A** | 10 | 15 | 75 | | 100 |
| **Basin Factor (Nb)** | 0.035 | 0.035 | 0.035 | **in Factor (N** | 0.035 |
| **Soil Types** | B | B | B | | |
| **Imperviousness (%)** | 3 | 3 | 3 | **Iw** | 3 |
| **Runoff Coefficient (Cw)** | 0.62 | 0.62 | 0.62 | **Cw** | 0.62 |

| **Results** | | | |
|---|---|---|---|
| **Time of Concentration** | 10.7 | min | (Calculated) |
| **Time of Concentration** | 10.7 | min | (Utilized) |
| **Rainfall Intensity (i100)** | 7.81 | in/hr | |
| **Q100** | 425.3 | cfs | |

| **Calc Q for other Return Intervals** | | |
|---|---|---|
| **Return Interval (yrs)** | **Ratio** | **Q(cfs)** |
| 2 | 0.05 | 21.3 |
| 5 | 0.2 | 85.1 |
| 10 | 0.35 | 148.9 |
| 25 | 0.55 | 233.9 |
| 50 | 0.75 | 319.0 |
| 100 | 1 | 425.3 |

# City of Tucson Hydrologic Data Sheet

Prepared by: CEB
Date: April 15, 2011
Checked by: GRB
Date: May 3, 2011

| | | | |
|---|---|---|---|
| **Project Name:** | Marana Regional | | |
| **Project Number:** | 090250 | | |
| **Concentration Point:** | West Downdrain Flow | | |
| | | | |
| **Watershed Area:** | 53.96 | ac | |
| **Length (Lc)** | 2457 | ft | (Length of hydraulically longest watercourse) |
| **Length (Lca)** | 1457 | ft | (Length to center of watershed area along Lc) |

| **Change in Length Factors** | | | **Change in Slope Factors** | | |
|---|---|---|---|---|---|
| **Reach No.** | **Delta L** | **Delta $L^3$** | **Delta H** | **lta $L^3$/Delta** | **Slope** |
| **1** | 607.00 | 2.24E+08 | 25.00 | 8.95E+06 | 4.12% |
| **2** | 1526.00 | 3.55E+09 | 10.00 | 3.55E+08 | 0.66% |
| **3** | 324.00 | 3.40E+07 | 10.00 | 3.40E+06 | 3.09% |
| Length Check OK | | | | | |

| | | | |
|---|---|---|---|
| **G Factor** | 23686 | | |
| **Mean Slope** | 0.0108 | | |
| | | | |
| **P(1,100)** | 3 | in | (Areally reduced 100 yr, 1hr rainfall depth) |

| **Basin Hydrologic Factors** | | | | | |
|---|---|---|---|---|---|
| | **Subarea 1** | **Subarea 2** | **Subarea 3** | **Weighted Parameters** | |
| **Watershed Type** | Nat | Nat | Nat | | |
| **Percent of A** | 80 | 10 | 10 | | 100 |
| **Basin Factor (Nb)** | 0.055 | 0.035 | 0.035 | **n Factor (N** | 0.037525512 |
| **Soil Types** | B | B | B | | |
| **Imperviousness (%)** | 3 | 3 | 3 | **Iw** | 3 |
| **Runoff Coefficient (Cw)** | 0.62 | 0.62 | 0.62 | **Cw** | 0.62 |

| **Results** | | | |
|---|---|---|---|
| **Time of Concentration** | 13.9 | min | (Calculated) |
| **Time of Concentration** | 13.9 | min | (Utilized) |
| **Rainfall Intensity (i100)** | 7.08 | in/hr | |
| **Q100** | 236.9 | cfs | |

| **Calc Q for other Return Intervals** | | |
|---|---|---|
| **Return Interval (yrs)** | **Ratio** | **Q(cfs)** |
| 2 | 0.05 | 11.8 |
| 5 | 0.2 | 47.4 |
| 10 | 0.35 | 82.9 |
| 25 | 0.55 | 130.3 |
| 50 | 0.75 | 177.7 |
| 100 | 1 | 236.9 |

# City of Tucson Hydrologic Data Sheet

Prepared by: CEB
Date: April 15, 2011
Checked by: GRB
Date: May 3, 2011

| | | | |
|---|---|---|---|
| **Project Name:** | Marana Regional | | |
| **Project Number:** | 090250 | | |
| **Concentration Point:** | South Downdrain Sizing | | |
| | | | |
| **Watershed Area:** | 30.1 | ac | |
| **Length (Lc)** | 1957 | ft | (Length of hydraulically longest watercourse) |
| **Length (Lca)** | 980 | ft | (Length to center of watershed area along Lc) |

| **Change in Length Factors** | | | **Change in Slope Factors** | | |
|---|---|---|---|---|---|
| **Reach No.** | **Delta L** | **Delta $L^3$** | **Delta H** | **elta $L^3$/Delta** | **Slope** |
| **1** | 345.00 | 4.11E+07 | 24.00 | 1.71E+06 | 6.96% |
| **2** | 806.00 | 5.24E+08 | 4.50 | 1.16E+08 | 0.56% |
| **3** | 806.00 | 5.24E+08 | 4.50 | 1.16E+08 | 0.56% |
| Length Check OK | | | | | |

| | | | |
|---|---|---|---|
| | | | |
| **G Factor** | 22882 | | |
| **Mean Slope** | 0.0073 | | |
| | | | |
| **P(1,100)** | 3 | in | (Areally reduced 100 yr, 1hr rainfall depth) |

| **Basin Hydrologic Factors** | | | | | |
|---|---|---|---|---|---|
| | **Subarea 1** | **Subarea 2** | **Subarea 3** | **Weighted Parameters** | |
| **Watershed Type** | Nat | Nat | Nat | | |
| **Percent of A** | 80 | 10 | 10 | | 100 |
| **Basin Factor (Nb)** | 0.055 | 0.035 | 0.035 | **in Factor (N** | 0.036143305 |
| **Soil Types** | B | B | B | | |
| **Imperviousness (%)** | 3 | 3 | 3 | **Iw** | 3 |
| **Runoff Coefficient (Cw)** | 0.62 | 0.62 | 0.62 | **Cw** | 0.62 |

| **Results** | | | |
|---|---|---|---|
| **Time of Concentration** | 12.8 | min | (Calculated) |
| **Time of Concentration** | 12.8 | min | (Utilized) |
| **Rainfall Intensity (i100)** | 7.32 | in/hr | |
| **Q100** | 136.6 | cfs | |
| | | | |

| **Calc Q for other Return Intervals** | | |
|---|---|---|
| **Return Interval (yrs)** | **Ratio** | **Q(cfs)** |
| 2 | 0.05 | 6.8 |
| 5 | 0.2 | 27.3 |
| 10 | 0.35 | 47.8 |
| 25 | 0.55 | 75.1 |
| 50 | 0.75 | 102.5 |
| 100 | 1 | 136.6 |

# City of Tucson Hydrologic Data Sheet

Prepared by: CEB
Date: April 15, 2011
Checked by: GRB
Date: May 3, 2011

| | | | |
|---|---|---|---|
| **Project Name:** | Marana Regional | | |
| **Project Number:** | 090250 | | |
| **Concentration Point:** | South LF Berm sizing | | |
| | | | |
| **Watershed Area:** | 13.3 | ac | |
| **Length (Lc)** | 1783 | ft | (Length of hydraulically longest watercourse) |
| **Length (Lca)** | 870 | ft | (Length to center of watershed area along Lc) |

| **Change in Length Factors** | | | **Change in Slope Factors** | | |
|---|---|---|---|---|---|
| **Reach No.** | **Delta L** | **Delta $L^3$** | **Delta H** | **lta $L^3$/Delta** | **Slope** |
| **1** | 450.00 | 9.11E+07 | 23.00 | 3.96E+06 | 5.11% |
| **2** | 666.00 | 2.95E+08 | 12.00 | 2.46E+07 | 1.80% |
| **3** | 667.00 | 2.97E+08 | 12.00 | 2.47E+07 | 1.80% |
| Length Check OK | | | | | |

| | | | |
|---|---|---|---|
| | | | |
| **G Factor** | 11925 | | |
| **Mean Slope** | 0.0224 | | |
| | | | |
| **P(1,100)** | 3 | in | (Areally reduced 100 yr, 1hr rainfall depth) |

| **Basin Hydrologic Factors** | | | | | |
|---|---|---|---|---|---|
| | **Subarea 1** | **Subarea 2** | **Subarea 3** | **Weighted Parameters** | |
| **Watershed Type** | Nat | Nat | Nat | | |
| **Percent of A** | 80 | 10 | 10 | | 100 |
| **Basin Factor (Nb)** | 0.055 | 0.035 | 0.035 | **n Factor (N** | 0.038338358 |
| **Soil Types** | B | B | B | | |
| **Imperviousness (%)** | 3 | 3 | 3 | **Iw** | 3 |
| **Runoff Coefficient (Cw)** | 0.62 | 0.62 | 0.62 | **Cw** | 0.62 |

| **Results** | | | |
|---|---|---|---|
| **Time of Concentration** | 7.8 | min | (Calculated) |
| **Time of Concentration** | 7.8 | min | (Utilized) |
| **Rainfall Intensity (i100)** | 8.64 | in/hr | |
| **Q100** | 71.3 | cfs | |
| | | | |

| **Calc Q for other Return Intervals** | | |
|---|---|---|
| **Return Interval (yrs)** | **Ratio** | **Q(cfs)** |
| 2 | 0.05 | 3.6 |
| 5 | 0.2 | 14.3 |
| 10 | 0.35 | 24.9 |
| 25 | 0.55 | 39.2 |
| 50 | 0.75 | 53.4 |
| 100 | 1 | 71.3 |

# City of Tucson Hydrologic Data Sheet

Prepared by: CEB
Date: April 15, 2011
Checked by: GRB
Date: May 3, 2011

| | | | |
|---|---|---|---|
| **Project Name:** | Marana Regional | | |
| **Project Number:** | 090250 | | |
| **Concentration Point:** | Interim Cell 1 Berm sizing | | |
| | | | |
| **Watershed Area:** | 21.5 | ac | |
| **Length (Lc)** | 1382 | ft | (Length of hydraulically longest watercourse) |
| **Length (Lca)** | 691 | ft | (Length to center of watershed area along Lc) |

| **Change in Length Factors** | | | **Change in Slope Factors** | | |
|---|---|---|---|---|---|
| **Reach No.** | **Delta L** | **Delta $L^3$** | **Delta H** | **lta $L^3$/Delta** | **Slope** |
| **1** | 460.66 | 9.78E+07 | 1.53 | 6.39E+07 | 0.33% |
| **2** | 460.67 | 9.78E+07 | 1.53 | 6.39E+07 | 0.33% |
| **3** | 460.67 | 9.78E+07 | 1.53 | 6.39E+07 | 0.33% |
| Length Check OK | | | | | |

| | | | |
|---|---|---|---|
| | | | |
| **G Factor** | 23980 | | |
| **Mean Slope** | 0.0033 | | |
| | | | |
| **P(1,100)** | 3 | in | (Areally reduced 100 yr, 1hr rainfall depth) |

| **Basin Hydrologic Factors** | | | | | |
|---|---|---|---|---|---|
| | **Subarea 1** | **Subarea 2** | **Subarea 3** | **Weighted Parameters** | |
| **Watershed Type** | Nat | Nat | Nat | | |
| **Percent of A** | 80 | 10 | 10 | | 100 |
| **Basin Factor (Nb)** | 0.055 | 0.035 | 0.035 | **n Factor (N** | 0.041666522 |
| **Soil Types** | B | B | B | | |
| **Imperviousness (%)** | 3 | 3 | 3 | **Iw** | 3 |
| **Runoff Coefficient (Cw)** | 0.62 | 0.62 | 0.62 | **Cw** | 0.62 |

| **Results** | | | |
|---|---|---|---|
| **Time of Concentration** | 17.3 | min | (Calculated) |
| **Time of Concentration** | 17.3 | min | (Utilized) |
| **Rainfall Intensity (i100)** | 6.44 | in/hr | |
| **Q100** | 85.8 | cfs | |
| | | | |

| **Calc Q for other Return Intervals** | | |
|---|---|---|
| **Return Interval (yrs)** | **Ratio** | **Q(cfs)** |
| 2 | 0.05 | 4.3 |
| 5 | 0.2 | 17.2 |
| 10 | 0.35 | 30.0 |
| 25 | 0.55 | 47.2 |
| 50 | 0.75 | 64.3 |
| 100 | 1 | 85.8 |

## City of Tucson Hydrologic Data Sheet

Prepared by: CEB
Date: April 15, 2011
Checked by: GRB
Date: May 3, 2011

| | | | |
|---|---|---|---|
| **Project Name:** | Marana Regional | | |
| **Project Number:** | 090250 | | |
| **Concentration Point:** | East Basin Weir Sizing | | |
| | | | |
| **Watershed Area:** | 203.99 | ac | |
| **Length (Lc)** | 7532 | ft | (Length of hydraulically longest watercourse) |
| **Length (Lca)** | 4590 | ft | (Length to center of watershed area along Lc) |

| **Change in Length Factors** | | | **Change in Slope Factors** | | |
|---|---|---|---|---|---|
| **Reach No.** | **Delta L** | **Delta $L^3$** | **Delta H** | **elta $L^3$/Delta** | **Slope** |
| **1** | 2512.00 | 1.59E+10 | 45.00 | 3.52E+08 | 1.79% |
| **2** | 440.00 | 8.52E+07 | 125.70 | 6.78E+05 | 28.57% |
| **3** | 4580.00 | 9.61E+10 | 12.00 | 8.01E+09 | 0.26% |
| Length Check OK | | | | | |

| | | | |
|---|---|---|---|
| | | | |
| **G Factor** | 109068 | | |
| **Mean Slope** | 0.0048 | | |
| | | | |
| **P(1,100)** | 3 | in | (Areally reduced 100 yr, 1hr rainfall depth) |

| **Basin Hydrologic Factors** | | | | | |
|---|---|---|---|---|---|
| | **Subarea 1** | **Subarea 2** | **Subarea 3** | **Weighted Parameters** | |
| **Watershed Type** | Nat | Nat | Nat | | |
| **Percent of A** | 80 | 10 | 10 | | 100 |
| **Basin Factor (Nb)** | 0.055 | 0.035 | 0.035 | **in Factor (N** | 0.038441575 |
| **Soil Types** | B | B | B | | |
| **Imperviousness (%)** | 3 | 3 | 3 | **Iw** | 3 |
| **Runoff Coefficient (Cw)** | 0.62 | 0.62 | 0.62 | **Cw** | 0.62 |

| **Results** | | | |
|---|---|---|---|
| **Time of Concentration** | 54.6 | min | (Calculated) |
| **Time of Concentration** | 54.6 | min | (Utilized) |
| **Rainfall Intensity (i100)** | 3.22 | in/hr | |
| **Q100** | 406.7 | cfs | |
| | | | |

| **Calc Q for other Return Intervals** | | |
|---|---|---|
| **Return Interval (yrs)** | **Ratio** | **Q(cfs)** |
| 2 | 0.05 | 20.3 |
| 5 | 0.2 | 81.3 |
| 10 | 0.35 | 142.3 |
| 25 | 0.55 | 223.7 |
| 50 | 0.75 | 305.0 |
| 100 | 1 | 406.7 |

# City of Tucson Hydrologic Data Sheet

Prepared by: CEB
Date: April 15, 2011
Checked by: GRB
Date: May 3, 2011

| | | | |
|---|---|---|---|
| **Project Name:** | Marana Regional | | |
| **Project Number:** | 090250 | | |
| **Concentration Point:** | West Basin Weir Sizing | | |
| | | | |
| **Watershed Area:** | 175.85 | ac | |
| **Length (Lc)** | 5050 | ft | (Length of hydraulically longest watercourse) |
| **Length (Lca)** | 4036 | ft | (Length to center of watershed area along Lc) |

| **Change in Length Factors** | | | **Change in Slope Factors** | | |
|---|---|---|---|---|---|
| **Reach No.** | **Delta L** | **Delta $L^3$** | **Delta H** | **elta $L^3$/Delta** | **Slope** |
| **1** | 2190.00 | 1.05E+10 | 23.00 | 4.57E+08 | 1.05% |
| **2** | 1430.00 | 2.92E+09 | 12.00 | 2.44E+08 | 0.84% |
| **3** | 1430.00 | 2.92E+09 | 12.00 | 2.44E+08 | 0.84% |
| Length Check OK | | | | | |

| | | | |
|---|---|---|---|
| **G Factor** | 52591 | | |
| **Mean Slope** | 0.0092 | | |
| | | | |
| **P(1,100)** | 3 | in | (Areally reduced 100 yr, 1hr rainfall depth) |

| **Basin Hydrologic Factors** | | | | | |
|---|---|---|---|---|---|
| | **Subarea 1** | **Subarea 2** | **Subarea 3** | **Weighted Parameters** | |
| **Watershed Type** | Nat | Nat | Nat | | |
| **Percent of A** | 80 | 10 | 10 | | 100 |
| **Basin Factor (Nb)** | 0.055 | 0.035 | 0.035 | **in Factor (N** | 0.043126878 |
| **Soil Types** | B | B | B | | |
| **Imperviousness (%)** | 3 | 3 | 3 | **Iw** | 3 |
| **Runoff Coefficient (Cw)** | 0.62 | 0.62 | 0.62 | **Cw** | 0.62 |

| **Results** | | | |
|---|---|---|---|
| **Time of Concentration** | 35.4 | min | (Calculated) |
| **Time of Concentration** | 35.4 | min | (Utilized) |
| **Rainfall Intensity (i100)** | 4.33 | in/hr | |
| **Q100** | 471.9 | cfs | |

| **Calc Q for other Return Intervals** | | |
|---|---|---|
| **Return Interval (yrs)** | **Ratio** | **Q(cfs)** |
| 2 | 0.05 | 23.6 |
| 5 | 0.2 | 94.4 |
| 10 | 0.35 | 165.2 |
| 25 | 0.55 | 259.6 |
| 50 | 0.75 | 353.9 |
| 100 | 1 | 471.9 |

# City of Tucson Hydrologic Data Sheet

Prepared by: CEB
Date: April 27, 2011
Checked by: GRB
Date: May 3, 2011

| | | | |
|---|---|---|---|
| **Project Name:** | Marana Regional | | |
| **Project Number:** | 090250 | | |
| **Concentration Point:** | south basin inlet and weir sizing | | |
| | | | |
| **Watershed Area:** | 98.1 | ac | |
| **Length (Lc)** | 5377 | ft | (Length of hydraulically longest watercourse) |
| **Length (Lca)** | 2800 | ft | (Length to center of watershed area along Lc) |

| **Change in Length Factors** | | | **Change in Slope Factors** | | |
|---|---|---|---|---|---|
| **Reach No.** | **Delta L** | **Delta $L^3$** | **Delta H** | **elta $L^3$/Delta** | **Slope** |
| **1** | 2464.00 | 1.50E+10 | 45.00 | 3.32E+08 | 1.83% |
| **2** | 389.00 | 5.89E+07 | 123.00 | 4.79E+05 | 31.62% |
| **3** | 2524.00 | 1.61E+10 | 10.00 | 1.61E+09 | 0.40% |
| Length Check OK | | | | | |

| | | | |
|---|---|---|---|
| | | | |
| **G Factor** | 59024 | | |
| **Mean Slope** | 0.0083 | | |
| | | | |
| **P(1,100)** | 3 | in | (Areally reduced 100 yr, 1hr rainfall depth) |

| **Basin Hydrologic Factors** | | | | | |
|---|---|---|---|---|---|
| | **Subarea 1** | **Subarea 2** | **Subarea 3** | **Weighted Parameters** | |
| **Watershed Type** | Nat | Nat | Nat | | |
| **Percent of A** | 10 | 15 | 75 | | 100 |
| **Basin Factor (Nb)** | 0.035 | 0.035 | 0.035 | **in Factor (N** | 0.035 |
| **Soil Types** | B | B | B | | |
| **Imperviousness (%)** | 3 | 3 | 3 | **Iw** | 3 |
| **Runoff Coefficient (Cw)** | 0.62 | 0.62 | 0.62 | **Cw** | 0.62 |

| **Results** | | | |
|---|---|---|---|
| **Time of Concentration** | 25.0 | min | (Calculated) |
| **Time of Concentration** | 25.0 | min | (Utilized) |
| **Rainfall Intensity (i100)** | 5.33 | in/hr | |
| **Q100** | 324.3 | cfs | |

| **Calc Q for other Return Intervals** | | |
|---|---|---|
| **Return Interval (yrs)** | **Ratio** | **Q(cfs)** |
| 2 | 0.05 | 16.2 |
| 5 | 0.2 | 64.9 |
| 10 | 0.35 | 113.5 |
| 25 | 0.55 | 178.3 |
| 50 | 0.75 | 243.2 |
| 100 | 1 | 324.3 |

# APPENDIX B

# HYDRAULIC DESIGN

1. Retention Basins
2. Perimeter Channels
3. Downdrains
4. Diversion Berms
5. Off-site
6. Interim
7. Supporting Information

## Mannings Equation Calculator for Trapezoidal Channels with known Q

**Project Name:** MARANA REGIONAL LANDFILL
**Project Number:** 90250
**Desciption:** Channel Sizing
ONSITE

Prepared by: CEB
Date: April 13, 2011
Checked by: GRB
Date: May 3, 2011

(Note: Triangular Channels are a special case with bottom width = 0)
(Note: For rectangular channels enter negative number for sideslopes)

Where: Q = Flow Rate (cfs) b = Channel Bottom Width (ft)
n= Manning's n $V_{p100}$ = Peak Velocity for 100-yr Event
A = Flow Area ($ft^2$) $Y_{p100}$ = Peak Flow Depth for 100-yr Event
R = Hydraulic Radius (ft)
So = Sf = Bed Slope (ft/ft)

**100 YR**

Enter Data in Blue Text Cells

| Reach | Slope (ft/ft) | n | Bottom Width (ft) | Sideslope1 (x:1) | Sideslope2 (x:1) | Depth (ft) | V (fps) | Q (cfs) | Regime | Flow Probl | Area (SF) | WP (ft) | Hyd. Rad. (ft) | Top Width (ft) | Hyd. Depth (ft) | Nf | Act. Sideslope1 | Act Sideslope2 | Low Flow Check Result | target |
|---|---|---|---|---|---|---|---|---|---|---|---|---|---|---|---|---|---|---|---|---|
| S1a | 0.0075 | 0.04 | 5 | 3 | 3 | 4.25 | 5.71 | 431.11 | Sub | No Low-Flow | 75.4375 | 31.8794 | 2.3663 | 30.5 | 2.4734 | 0.6404 | 3 | 3 | 0.205865 | 407 |
| S2a | 0.005 | 0.04 | 0 | 3 | 3 | 1.1 | 1.70 | 6.18 | Sub | No Low-Flow | 3.6300 | 6.9570 | 0.5218 | 6.6 | 0.5500 | 0.4045 | 3 | 3 | 0 | 5.8 |
| S2b | 0.005 | 0.04 | 0 | 3 | 3 | 1.1 | 1.70 | 6.18 | Sub | No Low-Flow | 3.6300 | 6.9570 | 0.5218 | 6.6 | 0.5500 | 0.4045 | 3 | 3 | 0 | 5.8 |
| S4a | 0.0032 | 0.04 | 0 | 3 | 3 | 1.6 | 1.75 | 13.43 | Sub | No Low-Flow | 7.6800 | 10.1193 | 0.7589 | 9.6 | 0.8000 | 0.3445 | 3 | 3 | 0 | 12.2 |
| E1a | 0.0032 | 0.04 | 0 | 3 | 3 | 1.25 | 1.48 | 6.95 | Sub | No Low-Flow | 4.6875 | 7.9057 | 0.5929 | 7.5 | 0.6250 | 0.3306 | 3 | 3 | 0 | 5.5 |
| E1b | 0.0028 | 0.04 | 9 | 3 | 3 | 4.5 | 3.82 | 386.33 | Sub | No Low-Flow | 101.2500 | 37.4605 | 2.7028 | 36 | 2.8125 | 0.4009 | 3 | 3 | 0.524164 | 386.7 |
| E2a | 0.0028 | 0.04 | 9 | 3 | 3 | 4.5 | 3.82 | 386.33 | Sub | No Low-Flow | 101.2500 | 37.4605 | 2.7028 | 36 | 2.8125 | 0.4009 | 3 | 3 | 0.524164 | 386.7 |
| E3a | 0.0038 | 0.04 | 9 | 3 | 3 | 4.5 | 4.45 | 450.06 | Sub | No Low-Flow | 101.2500 | 37.4605 | 2.7028 | 36 | 2.8125 | 0.4671 | 3 | 3 | 0.44994 | 445.3 |
| E4a | 0.0048 | 0.04 | 0 | 3 | 3 | 1.4 | 1.96 | 11.52 | Sub | No Low-Flow | 5.8800 | 8.8544 | 0.6641 | 8.4 | 0.7000 | 0.4126 | 3 | 3 | 0 | 10.4 |
| E4b | 0.0077 | 0.04 | 0 | 3 | 3 | 1.7 | 2.82 | 24.48 | Sub | No Low-Flow | 8.6700 | 10.7517 | 0.8064 | 10.2 | 0.8500 | 0.5398 | 3 | 3 | 0 | 21.3 |
| W1a | 0.0033 | 0.04 | 6 | 3 | 3 | 4.5 | 3.98 | 349.31 | Sub | No Low-Flow | 87.7500 | 34.4605 | 2.5464 | 33 | 2.6591 | 0.4302 | 3 | 3 | 0.334943 | 331.7 |
| W1b | 0.0016 | 0.04 | 0 | 3 | 3 | 1.4 | 1.13 | 6.65 | Sub | No Low-Flow | 5.8800 | 8.8544 | 0.6641 | 8.4 | 0.7000 | 0.2382 | 3 | 3 | 0 | 6.1 |
| W2a | 0.0061 | 0.04 | 4 | 3 | 3 | 1.8 | 3.09 | 52.31 | Sub | No Low-Flow | 16.9200 | 15.3842 | 1.0998 | 14.8 | 1.1432 | 0.5096 | 3 | 3 | 0.718786 | 47.3 |
| W2b | 0.0061 | 0.04 | 6.5 | 3 | 3 | 4.5 | 5.45 | 490.66 | Sub | No Low-Flow | 90.0000 | 34.9605 | 2.5743 | 33.5 | 2.6866 | 0.5862 | 3 | 3 | 0.26495 | 476 |
| W2c | 0.0016 | 0.04 | 0 | 3 | 3 | 1.75 | 1.31 | 12.06 | Sub | No Low-Flow | 9.1875 | 11.0680 | 0.8301 | 10.5 | 0.8750 | 0.2473 | 3 | 3 | 0 | 11.7 |
| Typ Berm | 0.005 | 0.035 | 0 | 3 | 3 | 2 | 2.90 | 34.78 | Sub | No Low-Flow | 12.0000 | 12.6491 | 0.9487 | 12 | 1.0000 | 0.5108 | 3 | 3 | 0 | |
| Entr Channe | 0.005 | 0.04 | 6 | 3 | 3 | 4.5 | 4.90 | 429.98 | Sub | No Low-Flow | 87.7500 | 34.4605 | 2.5464 | 33 | 2.6591 | 0.5295 | 3 | 3 | 0.272109 | |

Reference: Chow, Ven Ti. Open-Channel Hydraulics. New York: McGraw-Hill Inc. 1959.
City of Tucson, Drainage Design and Floodplain Management Manual. 1989.

## Mannings Equation Calculator for Trapezoidal Channels with known Q

**Project Name:** MARANA REGIONAL LANDFILL
**Project Number:** 90250
**Desciption:** Channel Sizing
ONSITE

Prepared by: CEB
Date: April 13, 2011
Checked by: GRB
Date: May 3, 2011

(Note: Triangular Channels are a special case with bottom width = 0)
(Note: For rectangular channels enter negative number for sideslopes)

Where: Q = Flow Rate (cfs) b = Channel Bottom Width (ft)
n= Manning's n $V_{p100}$ = Peak Velocity for 100-yr Event
A = Flow Area ($ft^2$) $Y_{p100}$ = Peak Flow Depth for 100-yr Event
R = Hydraulic Radius (ft)

# 25 YR

| Reach | Slope (ft/ft) | n | Bottom Width (ft) | Sideslope1 (x:1) | Sideslope2 (x:1) | Depth (ft) | V (fps) | Q (cfs) | Regime | Flow Probl | Area (SF) | WP (ft) | Hyd. Rad. (ft) | Top Width (ft) | Hyd. Depth (ft) | Nf | Act. Sideslope1 | Act Sideslope2 | Low Flow Check Result | target |
|---|---|---|---|---|---|---|---|---|---|---|---|---|---|---|---|---|---|---|---|---|
| S1a | 0.0075 | 0.04 | 5 | 3 | 3 | 3.25 | 4.89 | 234.63 | Sub | No Low-Flow | 47.9375 | 25.5548 | 1.8759 | 24.5 | 1.9566 | 0.6166 | 3 | 3 | 0.314319 | 223.8 |
| S2a | 0.005 | 0.04 | 0 | 3 | 3 | 0.9 | 1.49 | 3.62 | Sub | No Low-Flow | 2.4300 | 5.6921 | 0.4269 | 5.4 | 0.4500 | 0.3911 | 3 | 3 | 0 | 3.2 |
| S2b | 0.005 | 0.04 | 0 | 3 | 3 | 0.9 | 1.49 | 3.62 | Sub | No Low-Flow | 2.4300 | 5.6921 | 0.4269 | 5.4 | 0.4500 | 0.3911 | 3 | 3 | 0 | 3.2 |
| S4a | 0.0032 | 0.04 | 0 | 3 | 3 | 1.25 | 1.48 | 6.95 | Sub | No Low-Flow | 4.6875 | 7.9057 | 0.5929 | 7.5 | 0.6250 | 0.3306 | 3 | 3 | 0 | 6.8 |
| E1a | 0.0032 | 0.04 | 0 | 3 | 3 | 1 | 1.28 | 3.83 | Sub | No Low-Flow | 3.0000 | 6.3246 | 0.4743 | 6 | 0.5000 | 0.3185 | 3 | 3 | 0 | 3 |
| E1b | 0.0028 | 0.04 | 9 | 3 | 3 | 3.4 | 3.27 | 213.16 | Sub | No Low-Flow | 65.2800 | 30.5035 | 2.1401 | 29.4 | 2.2204 | 0.3862 | 3 | 3 | 0.810641 | 212.7 |
| E2a | 0.0028 | 0.04 | 9 | 3 | 3 | 3.4 | 3.27 | 213.16 | Sub | No Low-Flow | 65.2800 | 30.5035 | 2.1401 | 29.4 | 2.2204 | 0.3862 | 3 | 3 | 0.810641 | 198.2 |
| E3a | 0.0038 | 0.04 | 9 | 3 | 3 | 3.5 | 3.87 | 263.81 | Sub | No Low-Flow | 68.2500 | 31.1359 | 2.1920 | 30 | 2.2750 | 0.4516 | 3 | 3 | 0.665247 | 244.9 |
| E4a | 0.0048 | 0.04 | 0 | 3 | 3 | 1.1 | 1.67 | 6.05 | Sub | No Low-Flow | 3.6300 | 6.9570 | 0.5218 | 6.6 | 0.5500 | 0.3963 | 3 | 3 | 0 | 5.7 |
| E4b | 0.0077 | 0.04 | 0 | 3 | 3 | 1.3 | 2.36 | 11.97 | Sub | No Low-Flow | 5.0700 | 8.2219 | 0.6166 | 7.8 | 0.6500 | 0.5161 | 3 | 3 | 0 | 11.7 |
| W1a | 0.0033 | 0.04 | 6 | 3 | 3 | 3.5 | 3.45 | 199.10 | Sub | No Low-Flow | 57.7500 | 28.1359 | 2.0525 | 27 | 2.1389 | 0.4154 | 3 | 3 | 0.497244 | 182.4 |
| W1b | 0.0016 | 0.04 | 0 | 3 | 3 | 1.1 | 0.96 | 3.50 | Sub | No Low-Flow | 3.6300 | 6.9570 | 0.5218 | 6.6 | 0.5500 | 0.2288 | 3 | 3 | 0 | 3.4 |
| W2a | 0.0061 | 0.04 | 4 | 3 | 3 | 1.3 | 2.58 | 26.53 | Sub | Low Flow Cha | 10.2700 | 12.2219 | 0.8403 | 11.8 | 0.8703 | 0.4880 | 3 | 3 | 1.190961 | 26 |
| W2b | 0.0061 | 0.04 | 6.5 | 3 | 3 | 3.4 | 4.65 | 263.98 | Sub | No Low-Flow | 56.7800 | 28.0035 | 2.0276 | 26.9 | 2.1108 | 0.5639 | 3 | 3 | 0.4112 | 261.8 |
| W2c | 0.0016 | 0.04 | 0 | 3 | 3 | 1.4 | 1.13 | 6.65 | Sub | No Low-Flow | 5.8800 | 8.8544 | 0.6641 | 8.4 | 0.7000 | 0.2382 | 3 | 3 | 0 | 6.4 |
| Top Berm | 0.005 | 0.035 | 0 | 3 | 20 | 1.5 | 2.46 | 63.77 | Sub | No Low-Flow | 25.8750 | 34.7809 | 0.7439 | 34.5 | 0.7500 | 0.5015 | 3 | 20 | 0 | 39.2 |
| Typ Berm | 0.005 | 0.035 | 0 | 3 | 3 | 1.5 | 2.39 | 16.15 | Sub | No Low-Flow | 6.7500 | 9.4868 | 0.7115 | 9 | 0.7500 | 0.4868 | 3 | 3 | 0 | |
| Cell 1 Berm | 0.0028 | 0.025 | 0 | 3 | 30 | 1.2 | 2.23 | 52.96 | Sub | No Low-Flow | 23.7600 | 39.8147 | 0.5968 | 39.6 | 0.6000 | 0.5071 | 3 | 30 | 0 | 47.2 |
| Entr Channe | 0.005 | 0.04 | 6 | 3 | 3 | 3.4 | 4.17 | 229.94 | Sub | No Low-Flow | 55.0800 | 27.5035 | 2.0027 | 26.4 | 2.0864 | 0.5093 | 3 | 3 | 0.422724 | |

Reference: Chow, Ven Ti. Open-Channel Hydraulics. New York: McGraw-Hill Inc. 1959.
City of Tucson, Drainage Design and Floodplain Management Manual. 1989.

| | | | |
|---|---|---|---|
| | | Prepared by: | CEB |
| **Project Name:** | MARANA REGIONAL LANDFILL | Date: | May 3, 2011 |
| **Project Number:** | 90250 | Checked by: | GRB |
| **Desciption:** | Channel Sizing | Date: | May 3, 2011 |
| | ONSITE | | |

## MRLF BASIN CAPACITY CALCULATIONS (V=CPA)

| | P (in) | P (ft) | C |
|---|---|---|---|
| 25-YR, 24-HR | 3.6 | 0.3 | 0.52 |

| | AREA (ac) | C | P (ft) | | Required Volume (ac-ft) | Provided Volume (ac-ft) |
|---|---|---|---|---|---|---|
| **WEST BASIN** | | | | | | |
| 25-YR, 24-HR | 175.85 | 0.52 | 0.30 | | 27.43 | 30.93 |
| | | | | | | |
| **EAST BASIN** | | | | | | |
| 25-YR, 24-HR | 203.99 | 0.52 | 0.30 | | 31.82 | 38.47 |
| | | | | | | |
| **SOUTH BASIN** | | | | | | |
| 25-YR, 24-HR | 98.10 | 0.52 | 0.30 | | 15.30 | 16.30 |
| | | | | | | |

**Mannings Equation Calculator for Circular Channels flowing at any depth up to full (invalid for pressure flow)**

Prep by: CEB
Date: April 14, 2011
Chkd by: GRB
Date: May 3, 2011

Project Name: Marana Regional Landfill
Project Number: 90250
Description: pipe sizing for downdrains and splash pipes

Enter Data in Blue Text Cells

| Reach Description | Slope (ft/ft) | n | pe Diamet (ft) | Depth (ft) | V (fps) | Q (cfs) | Regime | Area (SF) | WP (ft) | Hyd. Rad. (ft) | Top Width (ft) | Hyd. Depth (ft) | Nf |
|---|---|---|---|---|---|---|---|---|---|---|---|---|---|
| Top Deck to DD W2 | 0.32000 | 0.010 | 2.000 | 1.90 | 62.796 | 218.227 | Super | 3.475 | 5.381 | 0.646 | 2.000 | 1.738 | 8.395 |
| South DD | 0.29000 | 0.010 | 2.000 | 1.90 | 59.780 | 207.746 | Super | 3.475 | 5.381 | 0.646 | 2.000 | 1.738 | 7.992 |
| Splash Pipe W2 | 0.00330 | 0.010 | 4.000 | 3.50 | 10.736 | 146.482 | Super | 13.644 | 9.675 | 1.410 | 4.000 | 3.411 | 1.024 |
| Splash Pipe S | 0.00750 | 0.010 | 4.000 | 3.50 | 16.185 | 220.830 | Super | 13.644 | 9.675 | 1.410 | 4.000 | 3.411 | 1.544 |
| Splash Pipe E1 | 0.00280 | 0.010 | 4.000 | 3.50 | 9.889 | 134.929 | Sub | 13.644 | 9.675 | 1.410 | 4.000 | 3.411 | 0.944 |
| Splash Pipe E2 | 0.00380 | 0.010 | 4.000 | 3.50 | 11.521 | 157.188 | Super | 13.644 | 9.675 | 1.410 | 4.000 | 3.411 | 1.099 |
| Splash Pipe E3 | 0.00330 | 0.010 | 4.000 | 3.50 | 10.736 | 146.482 | Super | 13.644 | 9.675 | 1.410 | 4.000 | 3.411 | 1.024 |
| Splash Pipe W1 | 0.00330 | 0.010 | 4.000 | 3.50 | 10.736 | 146.482 | Super | 13.644 | 9.675 | 1.410 | 4.000 | 3.411 | 1.024 |

Prepared by: CEB
Date: April 29, 2011
Checked by: GRB
Date: May 3, 2011

# WEIR CALCULATIONS FOR BASINS

**WEIR EQUATION** $Q=CLH^{3/2}$ $L = Q/CH^{3/2}$

$Q_{100}$ = Flow rate (cfs)
C = weir coefficient (2.67 Ven Te Chow)
L = length of weir (ft)
H = height of weir (ft)

| | | | | |
|---|---|---|---|---|
| **SOUTH BASIN** | | | calculated | use |
| Q | 324.3 | L | 121.5 | 122 |
| C | 2.67 | | | |
| H | 1 | | | |
| **EAST BASIN** | | | | |
| Q | 406.7 | | 152.3 | 153 |
| C | 2.67 | | | |
| H | 1 | | | |
| **WEST BASIN** | | | | |
| Q | 471.9 | | 176.7 | 177 |
| C | 2.67 | | | |
| H | 1 | | | |

Prepared by: CEB
Date: 4/29/11
Checked by: GRB
Date: 5/03/11

# BERM SPACING CALCULATIONS

Q=CiA A=Q/Ci

| | |
|---|---|
| A = AREA BETWEEN BERMS (acres) | |
| $Q_{1.5}$ = FLOW REQUIRED FOR DEPTH OF 1.5 FT (25YR)(cfs) | 16.15 |
| $Q_{2.0}$ = FLOW REQUIRED FOR DEPTH OF 2.0 FT (100YR)(cfs) | 34.78 |
| $C_{25}$ = RUNOFF COEFFICIENT FOR 25-YR STORM | 0.52 |
| $C_{100}$ = RUNOFF COEFFICIENT FOR 100-YR STORM | 0.62 |
| $i_{25}$ = RAINFALL INTENSITY FOR 25-YR STORM (in/hr) | 5.28 |
| $i_{100}$ = RAINFALL INTENSITY FOR 100-YR STORM (in/hr) | 9.60 |

FOR 25-YR STORM;

| | | | | |
|---|---|---|---|---|
| BERM HEIGHT (ft) | 2 | A=16.15/(.52*5.28) | 5.88 acres | 256226 FT |
| FLOW DEPTH (ft) | 1.5 | | | |
| MANNING'S n | 0.035 | | | |

BERM SPACING = WIDTH OF AREA = 75 FT.
LENGTH OF AREA = ALLOWABLE LENGTH OF BERM = 256226/75 = 3416.35 FT

FOR 100-YR STORM

| | | | | |
|---|---|---|---|---|
| BERM HEIGHT (ft) | 2 | A=34.78/(.62*9.6) | 5.84 acres | 254539.1 FT |
| FLOW DEPTH (ft) | 2 | | | |
| MANNING'S n | 0.035 | | | |
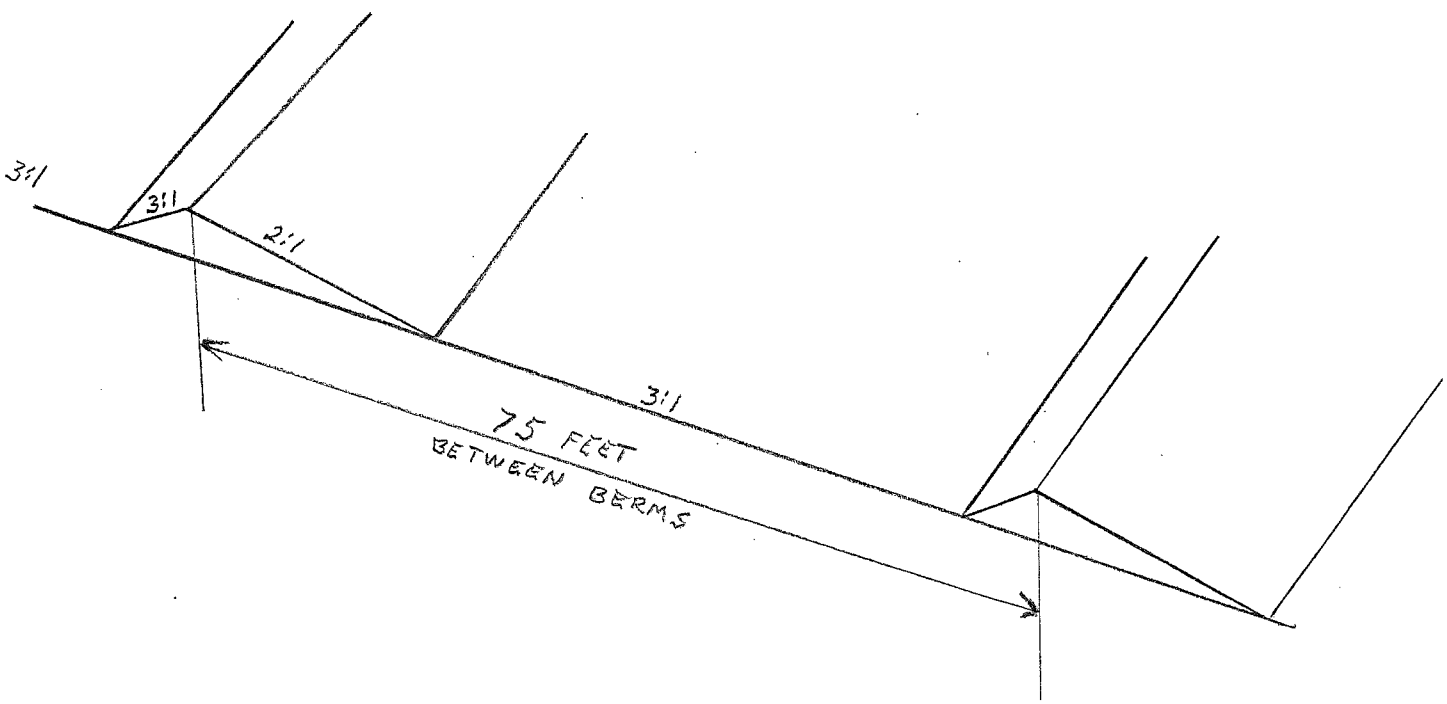
BERM SPACING = WIDTH OF AREA = 75 FT.
LENGTH OF AREA = ALLOWABLE LENGTH OF BERM = 254539/75 = 3393.85 FT