Appendix F

Well Construction Records
Lithologic Logs and Geophysical Logs
(*Lithologic Logs for Nested Wells, e.g., MW-4S, MW4M, and MW-4L, are only included with the data set for the "L" well)

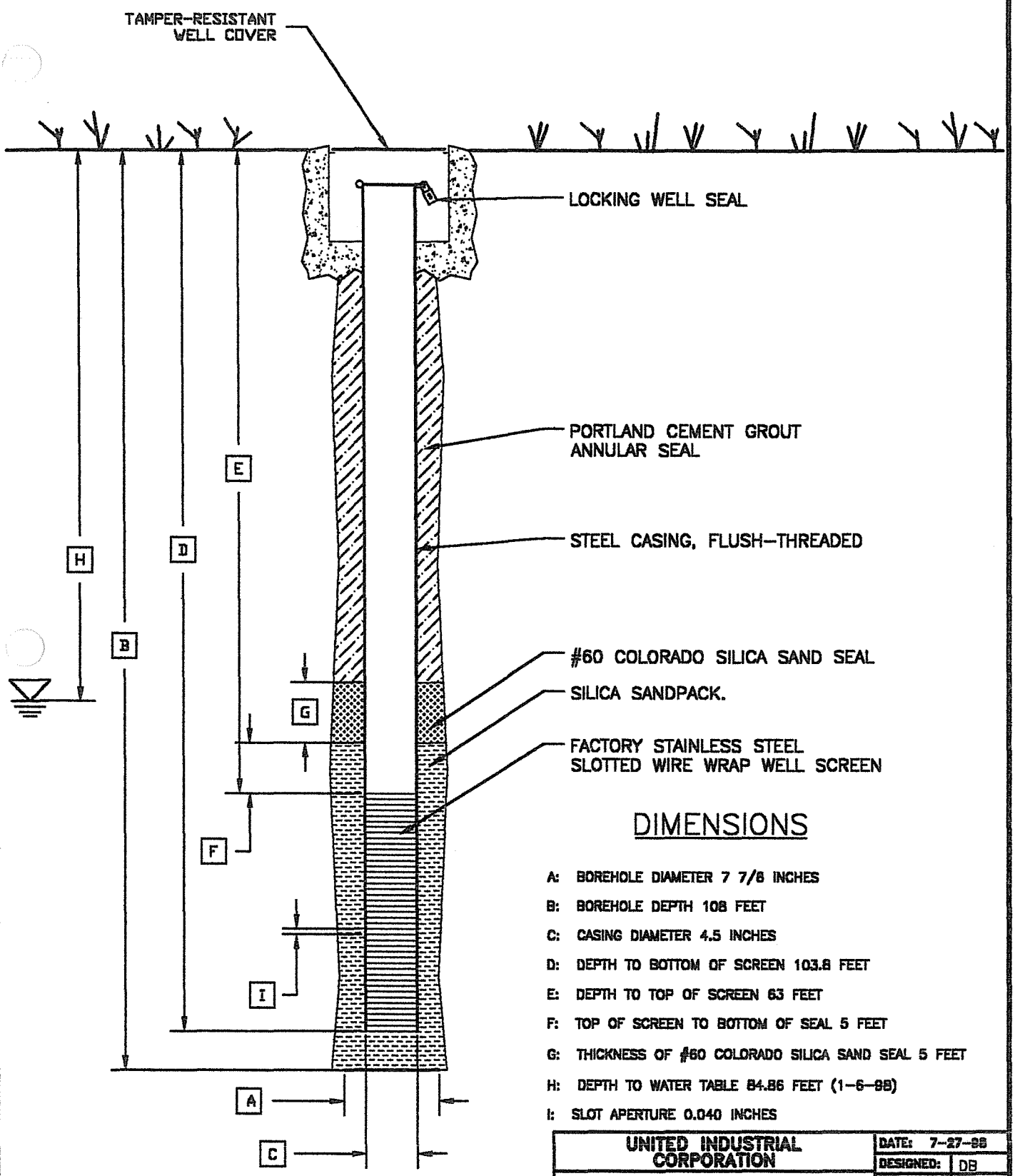

DIMENSIONS

A: BOREHOLE DIAMETER 7 7/8 INCHES

B: BOREHOLE DEPTH 108 FEET

C: CASING DIAMETER 4.5 INCHES

D: DEPTH TO BOTTOM OF SCREEN 103.8 FEET

E: DEPTH TO TOP OF SCREEN 63 FEET

F: TOP OF SCREEN TO BOTTOM OF SEAL 5 FEET

G: THICKNESS OF #60 COLORADO SILICA SAND SEAL 5 FEET

H: DEPTH TO WATER TABLE 84.86 FEET (1-6-98)

I: SLOT APERTURE 0.040 INCHES

* NOT TO SCALE

UNITED INDUSTRIAL CORPORATION	DATE: 7-27-98
	DESIGNED: DB
GROUNDWATER MONITOR WELL DIAGRAM MW-7S	CHECKED:
	APPROVED:
	DRAWN: JDD
	PROJ.: N421-101
HSI GEOTRANS A Tetra Tech Company	

P:\...\R-REPORT\WELL-7S.DWG

MONITOR WELL CONSTRUCTION SUMMARY

Well No. MW-7S

Boring No. X-Ref:

Map Coords: 4876 N, 3614 E

Elevation Ground Level:

Job Number: 808708313

Top of Casing: 1105.22

Drilling Summary:		Construction Time Log: **Start** 8/15/96 **Finish** 8/23/96				
Total Depth	108 feet		Date	Time	Date	Time
Borehole Diameter	7 ⅞ inches	Drilling (6 1/2")				
Casing Stick-Up	0	(12 1/4")				
Driller	Stewart Brothers Drilling Co.	(7 ⅞")	8/15/96	1600	8/16/96	0830
1700Rig	Gardner Denver 1500					
Bit(s)	7 ⅞" tricone	Geophys. Logging				
Drilling Fluid	Bentonite mud and polymers	Casing: 8 ⅝"				
Protective Casing	None	Casing: 4 ½"	8/16/96	1005	8/16/96	1140
Comments: Wells complete below land grade and a traffic box installed over						
well head						
		Sand Pack:	8/16/96	1205	8/16/96	1300
		Cementing:	8/19/96	0935	8/19/96	0940
		Development:	8/22/96	1400	8/23/96	1445

Well Design & Specifications

Basis: Geologic Log x Geophysical Log x

Casing String(s): C = Casing S = Screen

Well Development: Added SAPP solution to well; bailed 919 gallons

gallons of water and drilling from well

Depth (ft)	String (C1, S1, etc.)	Elevation (ft)
0 to 63	C1- 8" LCS	
63-103.8	S1 - 4.5" stainless steel	

Casing:	C1	8 5/8" Low carbon steel blank casing 0.188 wall
	C2	
Screen:	S1	4.5 " Stainless steel, 0.040" slot wire wrap
	S2	
Filter Pack:		57'-108': 8-12 Colorado silica sand.
Grout Seal:		0-512': neat cement with 3.5% bentonite
Seal:		51'-55': Bentonite pellets
		55'-57' #60 Colorado silica sand

Stabilization Test Data:

Time	pH	Spec. Cond. μs/m	Temp (C)
Pumped			

Site Name: West Osborn Complex

Location: Issac's Pueblo del Sol Middle School 3449 N. 39th Avenue

Supervised By: David Broermann

Date:

STATE OF ARIZONA
DEPARTMENT OF WATER RESOURCES
GROUNDWATER MANAGEMENT SUPPORT SECTION
MAIL TO: P.O. BOX 458, PHOENIX, ARIZONA 85001-0458
500 NORTH THIRD STREET, PHOENIX, ARIZONA 85004-3903
PHONE (602) 417-2470 FAX (602) 417-2422

RECEIVED JUN 28 1996 GROUNDWATER MGT

NOTICE OF INTENTION TO DRILL MONITOR/PIEZOMETER WELL

PLEASE READ GENERAL INSTRUCTIONS ON REVERSE SIDE OF THIS FORM BEFORE COMPLETING.

Section §45-596, Arizona Revised Statues provide: Prior to drilling a monitor or piezometer well, a Notice of Intention to Drill shall be filed with the Department.

1 Well/Land Location:

2N (Township) 2E (Range) 27 (Section)

NW ¼ (10 Acre) SW ¼ (40 Acre) NE ¼ (160 Acre)

2. Position location of the well on the land:

Latitude 33 o 29 ' 33 "

Longitude 112 o 08 ' 34 "

3. County: Maricopa

4. Owner of the land of wellsite:

sac School District Number 5
Name
3348 West McDowell Road
Address
Phoenix (City) Az. (Sate) 85009 (Zip)

Telephone Number 484-4700

5. Lessee of the land of wellsite:

NA
Name

Address

City Sate Zip

Telephone Number

6. Owner of well:

United Industrial Corporation
Name
4636 East University
Address
Phoenix (City) Az (State) 85034 (Zip)

Phone Number (602) 894-2800

7. Consulting firm:

Hydro-Search, Inc.
Name
David Broermann
Contact Person
(602) 894-2800
Phone Number

8. Purpose of well drilled pursuant to this notice:

Monitor XXXXXX
Piezometer

9. If for deepening or modifying, list well registration number:

55-

FOR DEPARTMENT USE ONLY

File No. A(2-2)27ACB
Filed 6-28-96 By
Input By

DUPLICATE
Mailed 7-9-96 By
Registration 55- 558664
AMA/INA PHX
W/S 07 S/B 04

10. Will this proposed well be associated with a permit: Yes ___ No XX
If yes, Permit No.

11. Construction will start:

July (Month) 15 (Day) 1996 (Year)

12. Period well will remain in use:

10 Years

13. For monitoring wells, is pump equipment to be installed?

Yes ___ No XXXXX

(a) If yes, design pump capacity:

(b) What use will be made of the water:

14. Drilling Firm:

Stewart Brothers Drilling Co.
Name
P.O. Box 2067
Address
Milans (City) NM (State) 87021 (Zip)

1-505-287-2986
Telephone Number

314
DWR License Number

A-4
ROC License Category

15. Proposed method of abandonment of well after project is completed: In accordance with A.A.C. R12-15-811, pursuant to R12-15-816

16. Is this well to monitor existing contamination? ___ Potential contamination XX .Please explain: Monitor wells will monitor potential-existing contamination previously identified in other monitor wells.

I state that this Notice is filed in compliance with Rule A.A.C. R12-15-809 and R12-15-816(F), and is complete and correct to the best of my knowledge and belief and that I understand the limitations and conditions set forth on the reverse side of this form.

ARTHUR ORTIZ, JR. — **Typed or Printed Name**

[signature] — **Signature [X] Land Owner [ ] Lessee of Wellsite**

6/26/96 — **Date**

17. **If construction plans have been coordinated with Arizona Department of Environmental Quality, who is the agency contact?** ____
Ms. AnaVargus

If construction plans have been coordinated with Arizona Department of Water Resources, who is the agency contact? None

18. **WELL CONSTRUCTION PLAN:**

a) Drilling method (mud rotary, hollow-stem auger, etc.) Mud Rotary

b) Borehole diameters: 12 inches from 0 feet to 25 feet.
7 7/8 inches from 25 feet to 80 feet.

c) Casing materials (PVC, steel, hollow-stem auger, etc.)

material Schedule 40 low carbon steel diameter 8 inches from 0 feet to 25 feet.
material Schedule 40 low carbon steel diameter 4 inches from 0 feet to 90 feet.

d) Method of sealing at reductions grout seal

e) Annular seal materials (cement, grout, etc.); method of placement (tremied, circulated):

material cement grout method tremied from 0 feet to 25 feet.
material bentonite method tremied from 80 feet to 90 feet.

f) Filter packs (state material):
material silica sand from 87 feet to 130 feet.
material ____ from ____ feet to ____ feet.

g) Perforation or screen specification:

type 4-Inch, type 304 stainless steel from 90 feet to 130 feet.
type ____ from ____ feet to ____ feet.

h) Method of well development (bail, air lift, surge) Air-lift, jet, surge and pump

i) Will surface or conductor casing extend above grade? Yes ____ No XXXX

19. **Include detailed construction diagram showing expected water depth in feet below land surface, and details of vault, if specified.**

GENERAL INSTRUCTION

1. **Please submit two original notices, with original signatures, and check or money order (no cash) in the amount of $ 10.00, to P.O. Box 458, Phoenix, Arizona 85001-0458 or hand deliver to 500 North Third Street, Phoenix, Arizona 85004-3903.**

CONDITIONS

1. **If an individual other than the land owner or lessee, signs this notice, an original letter of authorization from the land owner/lessee, stating that the individual has permission to sign this specific Notice on their behalf, shall accompany the Notice of Intention to Drill a Monitor/Piezometer Well form.**

2. **Construction and abandonment standards for all wells shall be in accordance with A.A.C. R12-15-811 and R12-15-816.**

3. **Drilling of the well shall be completed within one year after the date of Notice.**

4. **A Well Driller Report is required within thirty days of completion of drilling. A Completion Report is required to be filed with the Department within thirty days after installation of pump equipment for monitor wells.**

5. **Pump equipment may not be installed on a well drilled for piezometer purposes. If a monitor will is pumped, pumping is limited to the maximum amount required for monitor purposes, but in no case may exceed 35 gallons per minute and an annual volume of 10 acre feet total.**

6. **A.A.C. Rule R12-15-811.H.2, requires that: "A monitor well shall be identified as such on the vault cover or at the top of the steel casing. Identification information will include well registration number."**

. **Special construction standards, required pursuant to A.A.C. Rule R12-15-821:** ____

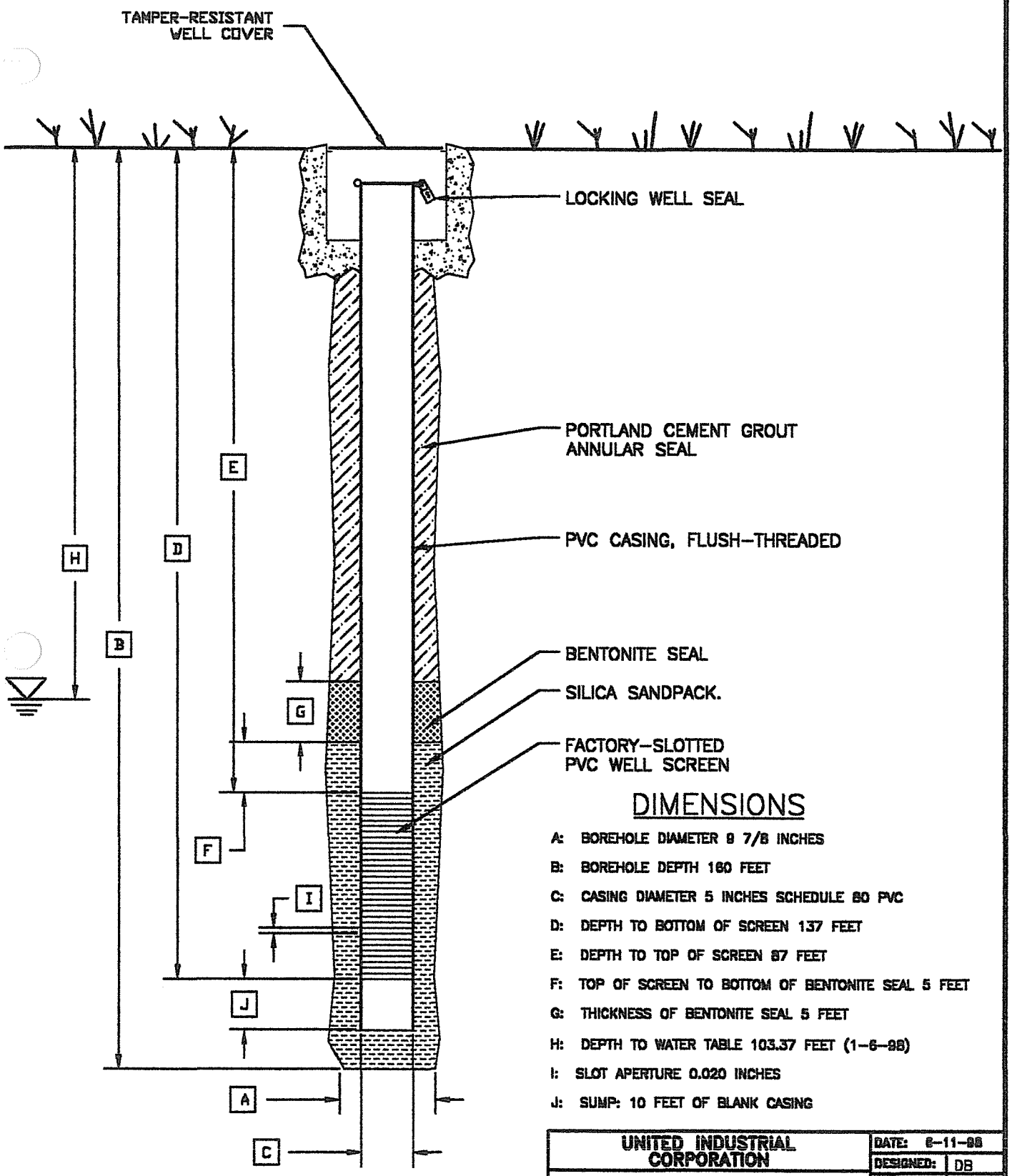

DIMENSIONS

A: BOREHOLE DIAMETER 8 7/8 INCHES

B: BOREHOLE DEPTH 160 FEET

C: CASING DIAMETER 5 INCHES SCHEDULE 80 PVC

D: DEPTH TO BOTTOM OF SCREEN 137 FEET

E: DEPTH TO TOP OF SCREEN 87 FEET

F: TOP OF SCREEN TO BOTTOM OF BENTONITE SEAL 5 FEET

G: THICKNESS OF BENTONITE SEAL 5 FEET

H: DEPTH TO WATER TABLE 103.37 FEET (1-6-98)

I: SLOT APERTURE 0.020 INCHES

J: SUMP: 10 FEET OF BLANK CASING

* NOT TO SCALE

UNITED INDUSTRIAL CORPORATION	DATE: 6-11-98
	DESIGNED: DB
GROUNDWATER MONITOR WELL DIAGRAM MW-100S	CHECKED:
	APPROVED:
	DRAWN: JDD
	PROJ.: N386-111
HSI GEOTRANS A Tetra Tech Company	

...\FB-REPORT\WELL-1003.DWG

HSI GEOTRANS

Site Map

Project No: N386-119

Client: UIC

Site: WOC

Borehole No: MW-100s

Start Date/Time: 10/20/97 16:00

End Date/Time: 10/21/97 13:45

Logged By: David Broermann

Drilling Method: Mud Rotary

Borehole Diameter: MW-100R

Angle from Vertical:

Datum:

Surface Conditions: Soil

Depth	Sample Number	Sample Type (SS=Split Spoon, C=Cuttings, O=Other)	Blow Counts/6"	Inches Driven	Inches Recovered	PID (ppm)	Lithology	Description and Comments
0								Ground Surface
5	1	C						**SILTY SAND SANDY SILT (SM-ML)** Brown, fine to coarse sand, silt, trace gravel
10, 15	2	C						**SILTY SAND (SM)** Brown, fine to coarse sand (80-90%), silt (10-15%), gravel (<5%), subangular coarse sand and gravel
20, 25	3	C						**SILTY SAND (SM)** Brown, fine to coarse sand, silt, trace clay, trace caliche
30, 35	4	C						**SILTY SAND (SM)** Brown, fine to coarse sand, silt, trace clay
40, 45	5	C						**SILTY SAND SANDY SILT (SM-ML)** Brown, fine to coarse sand, silt, angular to subangular coarse sand, trace clay and caliche
50								

Drilling Contractor: Stewart Brothers

Checked By:

Date Checked:

HSI GeoTrans, Inc.
4665 South Ash Avenue, Suite G-1
Tempe, Arizona 85282
Voice: 602-839-2800 Fax: 602-839-2828

HSI GEOTRANS

Site Map

Project No: N386-119

Client: UIC

Site: WOC

Borehole No: MW-100s

Start Date/Time: 10/20/97 16:00

End Date/Time: 10/21/97 13:45

Logged By: David Broermann

Drilling Method: Mud Rotary

Borehole Diameter: MW-100R

Angle from Vertical:

Datum:

Surface Conditions: Soil

Depth	Sample Number	Sample Type (SS=Split Spoon, C=Cuttings, O=Other)	Blow Counts/6"	Inches Driven	Inches Recovered	PID (ppm)	Lithology	Description and Comments
55	6	C						**SILTY SAND (SM)** Brown, fine to coarse sand, silt, trace clay and caliche
60								
65	7	C						**SILTY SAND (SM)** Brown, fine to coarse sand, silt (30-40%), angular-coarse sand, trace gravel 1/4" to 1/3"
70								
75	8	C						**SILTY SAND (SM)** Brown, fine to coarse sand, silt, rounded to angular sand, trace caliche
80								
85	9	C						**SILTY SAND (SM)** Brown, fine to coarse sand, silt, increase percent of coarse sand, trace caliche, trace to some gravel
90								
95	10	C						**SILTY CLAYEY SAND (SM-SC)** Brown, fine to coarse sand, silt and clay (30-40%), sand (60-70%), trace gravel
100								

Drilling Contractor: Stewart Brothers

Checked By:

Date Checked:

HSI GeoTrans, Inc.
4665 South Ash Avenue, Suite G-1
Tempe, Arizona 85282
Voice: 602-839-2800 Fax: 602-839-2828

HSI GEOTRANS

Site Map

Project No: N386-119

Client: UIC

Site: WOC

Borehole No: MW-100s

Start Date/Time: 10/20/97 16:00

End Date/Time: 10/21/97 13:45

Logged By: David Broermann

Drilling Method: Mud Rotary

Borehole Diameter: MW-100R

Angle from Vertical:

Datum:

Surface Conditions: Soil

Depth	Sample Number	Sample Type (SS=Split Spoon, C=Cuttings, O=Other)	Blow Counts/6"	Inches Driven	Inches Recovered	PID (ppm)	Lithology	Description and Comments
105	11	C						**SILTY SAND some gravel (SM)** Brown, fine to coarse sand, silt, some gravel 1/4" to 2", rounded to angular sand and gravel
110								
115	12	C						**SAND some silt, gravel, and clay (SM)** Brown, silty clayey, gravelly sand, fine to very coarse sand, 1/4" to 2" gravel, angular to rounded sand and gravel
120								
125	13	C						**SILTY CLAYEY SAND some gravel (SM)** Brown, silty clayey sand with gravel clasts, interbeded silty-sand with clay and gravel
130								
135	14	C						**SILTY SAND some gravel and clay** Brown, fine to coarse sand, silt, trace to some gravel and clay
140								
145	15	C						**SANDY SILT some clay (ML)** Brown, silt, very fine sand, interbedded silt and clay with sand lenses
150								

Drilling Contractor: Stewart Brothers

Checked By:

Date Checked:

HSI GeoTrans, Inc.
4665 South Ash Avenue, Suite G-1
Tempe, Arizona 85282
Voice: 602-839-2800 Fax: 602-839-2828

HSI GEOTRANS

Site Map

Project No: N386-119

Client: UIC

Site: WOC

Borehole No: MW-100s

Start Date/Time: 10/20/97 16:00

End Date/Time: 10/21/97 13:45

Logged By: David Broermann

Drilling Method: Mud Rotary

Borehole Diameter: MW-100R

Angle from Vertical:

Datum:

Surface Conditions: Soil

Depth	Sample Number	Sample Type (SS=Split Spoon, C=Cuttings, O=Other)	Blow Counts/6"	Inches Driven	Inches Recovered	PID (ppm)	Lithology	Description and Comments
155								**SANDY SILT and SANDY CLAY (ML-CL)** Brown, sandy silt and clay, very fine to medium sand, interbedded sand and clay lenses
160								Total Depth 160'
165								
170								
175								
180								
185								
190								
195								
200								

Drilling Contractor: Stewart Brothers

Checked By:

Date Checked:

Sheet: 4 of 4

HSI GeoTrans, Inc.
4665 South Ash Avenue, Suite G-1
Tempe, Arizona 85282
Voice: 602-839-2800 Fax: 602-839-2828

MONITOR WELL CONSTRUCTION SUMMARY

Well No. MW-100s

Boring No. X-Ref:

Map Coords: 4457 N, 5114 E

Elevation Ground Level:

Job Number: N386-119

Top of Casing:

Drilling Summary:		Construction Time Log: **Start 10/20/97**			**Finish 10/22/97**	
Total Depth	150 feet		Date	Time	Date	Time
Borehole Diameter	9 7/8 inches	Drilling (6 1/2")	10/20/97	16:00	10/21/97	13:45
Casing Stick-Up	0	(9 7/8")	10/21/97	16:45	10/22/97	11:00
Driller	Stewart Brothers Drilling Co.					
Rig	Gardner Denver 1500					
Bit(s)	0-160 feet: 6 1/2" tricone 0-150 feet: 9 7/8" tricone	Geophys. Logging	10/21/97	14:45	10/20/97	16:45
Drilling Fluid	Bentonite mud	Casing: 5"PVC	10/22/97	12:00	10/20/97	14:30
Protective Casing	None					
Comments: 6 ½ inch pilot hole was drilled from 0 to 160 feet. The hole						
was logged and then reamed using a 9 7/8 inch bit to 150 feet.						
		Sand Pack:	10/22/97	15:00	10/22/97	16:15
		Cementing:	10/22/97	16:15	10/22/97	17:00
		Development:	10/23/97		10/24/97	

Site Name: West Osborn Complex

Location: 3600 West Osborn Road

Well Design & Specifications

Basis: Geologic Log x Geophysical Log x

Casing String(s): C = Casing S = Screen

Well Development: Well was bailed by the driller prior to grouting. The monitor well was developed using a 4" submersible pump. The pump was raised and lowered by hand to surge the well.

Depth (ft)	String (C1, S1, etc.)	Elevation (ft)
0 to 87	C1 - 5" Sched 80 PVC	
87 to 137	S1 - 5" Sched 80 PVC	
137 to 147	C2 - 5" Sched 80 PVC	
to		
to		

Casing:	C1	5" Schedule 80 PVC blank casing
	C2	5" Schedule 80 PVC blank casing (10' sump)
Screen:	S1	5" Schedule 80 PVC factory 0.020"
	S2	
Filter Pack:		82'-150': 8-12 Colorado silica sand.
Grout Seal:		0-77': neat cement with 3.5% bentonite
Seal:		77'-82' Bentonite pellets

Stabilization Test Data:

Time	pH	Spec. Cond.	Temp (F)

Supervised By: David Broermann

Date: 3/26/98

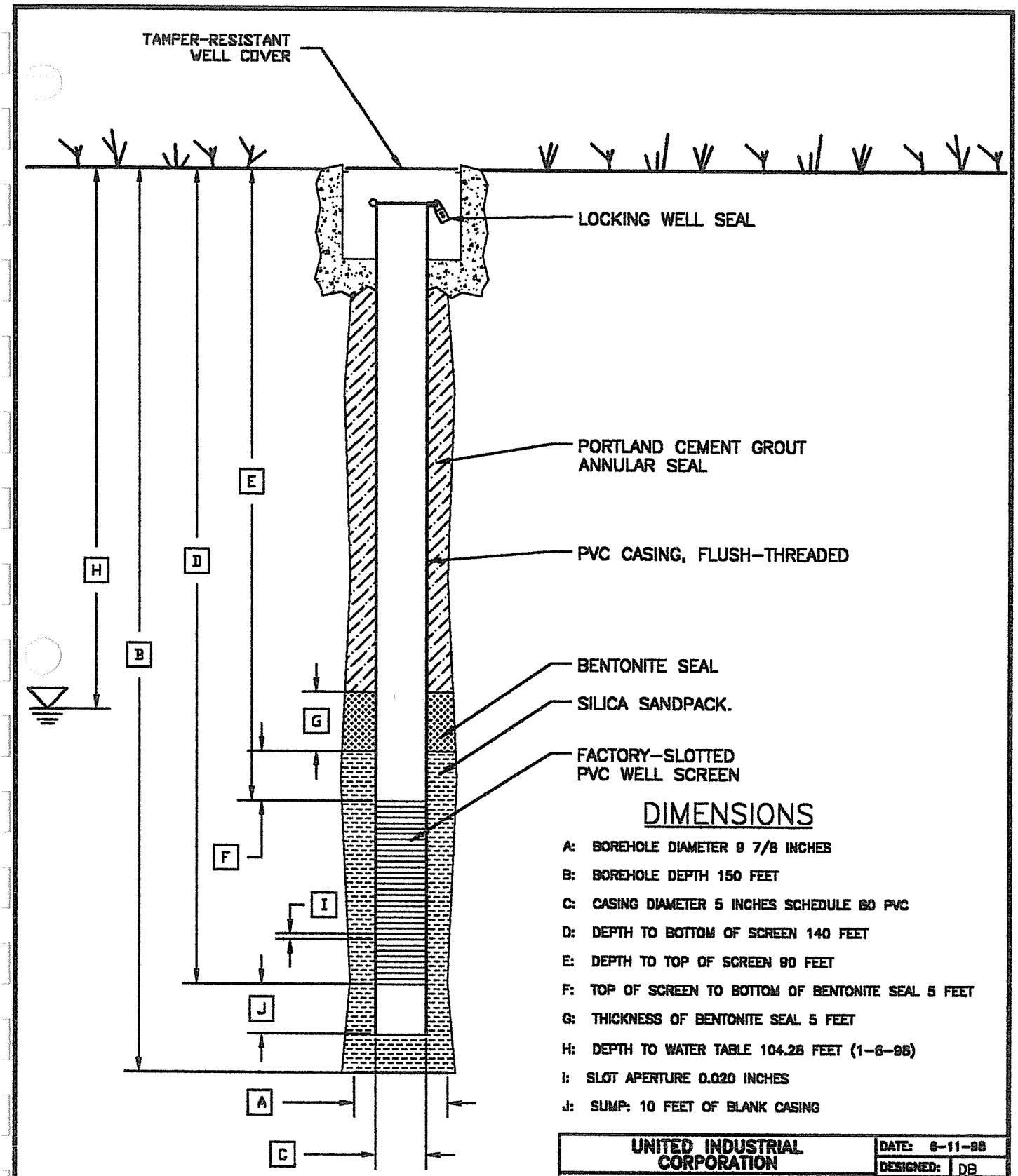

DIMENSIONS

A: BOREHOLE DIAMETER 9 7/8 INCHES

B: BOREHOLE DEPTH 150 FEET

C: CASING DIAMETER 5 INCHES SCHEDULE 80 PVC

D: DEPTH TO BOTTOM OF SCREEN 140 FEET

E: DEPTH TO TOP OF SCREEN 90 FEET

F: TOP OF SCREEN TO BOTTOM OF BENTONITE SEAL 5 FEET

G: THICKNESS OF BENTONITE SEAL 5 FEET

H: DEPTH TO WATER TABLE 104.28 FEET (1-6-98)

I: SLOT APERTURE 0.020 INCHES

J: SUMP: 10 FEET OF BLANK CASING

* NOT TO SCALE

UNITED INDUSTRIAL CORPORATION	DATE: 8-11-98
	DESIGNED: DB
GROUNDWATER MONITOR WELL DIAGRAM MW-101S	CHECKED:
	APPROVED:
	DRAWN: JDD
	PROJ.: N326-111
HSI GEOTRANS A Tetra Tech Company	

_\VB-REPORT\WELL-1023.DWG

HSI GEOTRANS

Site Map

Project No: N386-119

Client: UIC

Site: WOC

Borehole No: MW-101s

Start Date/Time: 10/23/97 15:00

End Date/Time: 10/24/97 15:00

Logged By: David Broermann

Drilling Method: Mud Rotary

Borehole Diameter: MW-101R

Angle from Vertical:

Datum:

Surface Conditions: Soil

Depth	Sample Number	Sample Type (SS=Split Spoon, C=Cuttings, O=Other)	Blow Counts/6"	Inches Driven	Inches Recovered	PID (ppm)	Lithology	Description and Comments
0								Ground Surface
5	1	C						**SILTY SAND SANDY SILT (SM-ML)** Brown, fine to coarse sand, silt, trace gravel
10								
15	2	C						**SILTY SAND (SM)** Brown, fine to coarse sand (80-90%), silt (10-15%), gravel (<5%), subangular coarse sand and gravel
20								
25	3	C						**SILTY SAND (SM)** Brown, fine to coarse sand, silt, trace clay, trace caliche
30								
35	4	C						**SILTY SAND (SM)** Brown, fine to coarse sand, silt, trace clay
40								
45	5	C						**SILTY SAND SANDY SILT (SM-ML)** Brown, fine to coarse sand, silt, angular to subangular coarse sand, trace clay and caliche
50								

Drilling Contractor: Stewart Brothers

Checked By:

Date Checked:

HSI GeoTrans, Inc.
4665 South Ash Avenue, Suite G-1
Tempe, Arizona 85282
Voice: 602-839-2800 Fax: 602-839-2828

HSI GEOTRANS

Site Map

Project No: N386-119

Client: UIC

Site: WOC

Borehole No: MW-101s

Start Date/Time: 10/23/97 15:00

End Date/Time: 10/24/97 15:00

Logged By: David Broermann

Drilling Method: Mud Rotary

Borehole Diameter: MW-101R

Angle from Vertical:

Datum:

Surface Conditions: Soil

Depth	Sample Number	Sample Type (SS=Split Spoon, C=Cuttings, O=Other)	Blow Counts/6"	Inches Driven	Inches Recovered	PID (ppm)	Lithology	Description and Comments
55	6	C						**SILTY SAND (SM)** Brown, fine to coarse sand, silt, trace clay and caliche
60								
65	7	C						**SILTY SAND (SM)** Brown, fine to coarse sand, silt (20-30%), angular-coarse sand, trace gravel 1/4" to 1/3"
70								
75	8	C						**SILTY SAND (SM)** Brown, fine to coarse sand, silt, rounded to angular sand, trace caliche
80								
85	9	C						**SILTY SAND (SM)** Brown, fine to coarse sand, silt, trace caliche, and trace to some gravel, increase percent of coarse sand
90								
95	10	C						**SILTY CLAYEY SAND (SM-SC)** Brown, fine to coarse sand, silt and clay (30-40%), sand (60-70%), trace gravel
100								

Drilling Contractor: Stewart Brothers

Checked By:

Date Checked:

HSI GeoTrans, Inc.
4665 South Ash Avenue, Suite G-1
Tempe, Arizona 85282
Voice: 602-839-2800 Fax: 602-839-2828

HSI GEOTRANS

Site Map

Project No: N386-119

Client: UIC

Site: WOC

Borehole No: MW-101s

Start Date/Time: 10/23/97 15:00

End Date/Time: 10/24/97 15:00

Logged By: David Broermann

Drilling Method: Mud Rotary

Borehole Diameter: MW-101R

Angle from Vertical:

Datum:

Surface Conditions: Soil

Depth	Sample Number	Sample Type (SS=Split Spoon, C=Cuttings, O=Other)	Blow Counts/6"	Inches Driven	Inches Recovered	PID (ppm)	Lithology	Description and Comments
105	11	C						**SILTY SAND some gravel (SM)** Brown, fine to coarse sand, silt, some 1/4"-to 2"-gravel, rounded to angular sand and gravel
110								
115	12	C						**SAND some silt, gravel, and clay (SM)** Brown, silty clayey, gravelly sand, fine to very coarse sand, 1/4" to 2" gravel, angular to rounded,
120								
125	13	C						**SILTY CLAYEY SAND some gravel (SM)** Brown, silty clayey sand, some gravel clasts, interbeded silty-sand with clay and gravel
130								
135	14	C						**SILTY SAND some gravel and clay (SM)** Brown, fine to coarse sand, silt and clay, trace to some gravel
140								
145	15	C						**SANDY SILT some clay (ML)** Brown, very fine sand, silt, some clay, interbedded silt and clay with sand lenses
150								

Drilling Contractor: Stewart Brothers

Checked By:

Date Checked:

Sheet: 3 of 4

HSI GeoTrans, Inc.
4665 South Ash Avenue, Suite G-1
Tempe, Arizona 85282
Voice: 602-839-2800 Fax: 602-839-2828

HSI GEOTRANS

Site Map

Project No: N386-119

Client: UIC

Site: WOC

Borehole No: MW-101s

Start Date/Time: 10/23/97 15:00

End Date/Time: 10/24/97 15:00

Logged By: David Broermann

Drilling Method: Mud Rotary

Borehole Diameter: MW-101R

Angle from Vertical:

Datum:

Surface Conditions: Soil

Depth	Sample Characteristics						Lithologic Characteristics	
	Sample Number	Sample Type (SS=Split Spoon, C=Cuttings, O=Other)	Blow Counts/6"	Inches Driven	Inches Recovered	PID (ppm)	Lithology	Description and Comments
	16	C						**SANDY SILT and SILTY SAND (SM-ML)** Brown, sandy silt and clay, very fine to medium sand, some coarse sand
155								Total Depth 155'
160								
165								
170								
175								
180								
185								
190								
195								
200								

Drilling Contractor: Stewart Brothers

Checked By:

Date Checked:

Sheet: 4 of 4

HSI GeoTrans, Inc.
4665 South Ash Avenue, Suite G-1
Tempe, Arizona 85282
Voice: 602-839-2800 Fax: 602-839-2828

MONITOR WELL CONSTRUCTION SUMMARY

Well No. MW-101s
Boring No. X-Ref:
Elevation Ground Level:
Top of Casing: 1107.67

Map Coords: 4457 N, 5169 E
Job Number: N386-119

Drilling Summary:	
Total Depth	150 feet
Borehole Diameter	9 7/8 inches
Casing Stick-Up	0
Driller	Stewart Brothers Drilling Co.
Rig	Gardner Denver 1500
Bit(s)	0-155 feet: 9 7/8" tricone
Drilling Fluid	Bentonite mud
Protective Casing	None

Comments: MW-101r was drilled and installed to a depth of 150 feet, based on geophysical logging results at MW-100r.

Construction Time Log:	Start 10/23/97		Finish 10/27/97	
	Date	Time	Date	Time
Drilling (9 7/8")	10/23/97	15:00	10/24/97	15:00
Geophys. Logging				
Casing: 5"PVC	10/27/97	9:00	10/27/97	10:30
Sand Pack:	10/27/97	10:30	10/27/97	14:00
Cementing:	10/27/97	14:00	10/27/97	14:30
Development:	10/27/97	14:30	10/29/97	17:00

Well Design & Specifications

Basis: Geologic Log x Geophysical Log x

Casing String(s): C = Casing S = Screen

Depth (ft)	String (C1, S1, etc.)	Elevation (ft)
0 to 90	C1 - 5" Sched 80 PVC	
90 to 140	S1 - 5" Sched 80 PVC	
140 to 150	C1 - 5" Sched 80 PVC	
to		
to		

Casing: C1	5" Schedule 80 PVC blank casing
C2	5" Schedule 80 PVC blank casing (10' sump)
Screen: S1	5" Schedule 80 PVC factory 0.020"
S2	
Filter Pack:	85'-155': 8-12 Colorado silica sand.
Grout Seal:	0-80': neat cement with 3.5% bentonite
Seal:	80'-85' Bentonite pellets

Well Development: Well was bailed by the driller prior to grouting. The monitor well was developed at a later date using a 4" submersible pump. The pump was raised and lowered by hand to surge the well.

Stabilization Test Data:

Time	pH	Spec. Cond.	Temp (F)

Site Name: West Osborn Complex

Location: 3600 West Osborn Road

Supervised By: David Broermann

Date: 3/26/98

STATE OF ARIZONA
DEPARTMENT OF WATER RESOURCES
GROUNDWATER MANAGEMENT SUPPORT SECTION
MAIL TO: P.O. BOX 458, PHOENIX, ARIZONA 85001-0458
500 NORTH THIRD STREET, PHOENIX, ARIZONA 85004-3903
PHONE (602) 417-2470 FAX (602) 417-2422

RECEIVED APR - 1 1997 GROUNDWATER MGT

NOTICE OF INTENTION TO DRILL MONITOR/PIEZOMETER WEL

PLEASE READ GENERAL INSTRUCTIONS ON REVERSE SIDE OF THIS FORM BEFORE COMPLETING.

Section §45-596, Arizona Revised Statues provide: Prior to drilling a monitor or piezometer well, a Notice of Intention to Drill shall be filed with the Department.

1 Well/Land Location:

2N (Township) 2E (Range) 27 (Section)

SW ¼ (10 Acre) SE ¼ (40 Acre) NE ¼ (160 Acre)

2. Position location of the well on the land:

Latitude 33 o 29 ' 16 "

Longitude 112 o 08 ' 17 "

3. County: Maricopa

4. Owner of the land of wellsite:

Mr. Charles D. Delaney
Name
00 West Osborn
Address
Phoenix Az. 85019
City State Zip

Telephone Number (602) 272-4855

5. Lessee of the land of well site:

Capitial Liquidators
Name
3600 West Osborn
Address
Phoenix Az. 85019
City Sate Zip

Telephone Number (602) 2724855

VARIANCE GRANTED

6. Owner of well:

United Industrial Corporation
Name
4636 East University Drive #145
Address
Phoenix Az 85034
City State Zip

Phone Number (602) 894-2800

7. Consulting firm:

Hydro-Search, Inc.
Name
David Broermann
Contact Person
(602) 894-2800
Phone Number

8. Purpose of well drilled pursuant to this notice:

Monitor XXXXXX
Piezometer

9. If for deepening or modifying, list well registration number:

55-

FOR DEPARTMENT USE ONLY
File No. A(2-2) 27 ADC
Filed 4-1-97 By Smn
Input By
DUPLICATE
Mailed 4-9-97 By Smn
Registration 55- 512004
AMA/INA PHX
W/S D7 S/B 04

SPECIAL REQUIREMENT

10. Wil this proposed well be associated with a permit: Yes ____ No XX
If yes, Permit No. ____

11. Construction will start:

April (Month) 29 (Day) 1997 (Year)

12. Period well will remain in use:

10 Month/Years

13. For monitoring wells, is pump equipment to be installed?

Yes XXXX No ____

(a) If yes, design pump capacity:

25 -35 GPM

(b) What use will be made of the water:

Sampled and disposed

14. Drilling Firm:

Stewart Brothers Drilling Co.
Name
P.O. Box 2067
Address
Milan NM 87021
City State Zip

1-505-287-2986
Telephone Number

314
DWR License Number

A-4
ROC License Category

15. Proposed method of abandonment of well after project is completed: In accordance with A.A.C. R12-15-811, pursuant to R12-15-816

16. Is this well to monitor existing contamination? ____ **Potential contamination** XX **.Please explain:** Monitor wells are to be to monitor potential- existing contamination previously identified in other monitor wells.

I state that this Notice is filed in compliance with Rule A.A.C. R12-15-809 and R12-15-816(F), and is complete and correct to the best of my knowledge and belief and that I understand the limitations and conditions set forth on the reverse side of this form.

Charles Delaney — Charles D. Delaney — 3/31/97

Typed or Printed Name **Signature [X] Land Owner [ ] Lessee of Wellsite** **Date**

17. **If construction plans have been coordinated with Arizona Department of Environmental Quality, who is the agency contact?** Ms. Ana Vargus

If construction plans have been coordinated with Arizona Department of Water Resources, who is the agency contact? None

WELL CONSTRUCTION PLAN:

a) Drilling method (mud rotary, hollow-stem auger, etc.) Mud Rotary-Hollow stem auger

b) Borehole diameters: 10 1/4 inches from 0 feet to 150 feet.
_____ inches from _____ feet to _____ feet.

c) Casing materials (PVC, steel, hollow-stem auger, etc.)

material Schedule 40 PVC diameter 4 inches from 0 feet to 85 feet.
material _____ diameter _____ inches from _____ feet to _____ feet.

d) Method of sealing at reductions NA

e) Annular seal materials (cement, grout, etc.); method of placement (tremied, circulated):

material cement grout method tremied from 0 feet to 80 feet.
material bentonite method tremied from 80 feet to 83 feet

f) Filter packs (state material):

material silica sand from 73 feet to 150 feet.
material _____ from _____ feet to _____ feet.

g) Perforation or screen specification:

type 4-Inch, Schedule 40 slotted 0.020inch from 85 feet to 150 feet.
type _____ from _____ feet to _____ feet.

h) Method of well development (bail, air lift, surge) Air-lift, jet, surge and pump

i) Will surface or conductor casing extend above grade? Yes _____ No XXX

Include detailed construction diagram showing expected water depth in feet below land surface, and details of vault, if specified.

GENERAL INSTRUCTION

1. Please submit two original notices, with original signatures, and check or money order (no cash) in the amount of $ 10.00, to P.O. Box 458, Phoenix, Arizona 85001-0458 or hand deliver to 500 North Third Street, Phoenix, Arizona 85004-3903.

CONDITIONS

1. If an individual other than the land owner or lessee, signs this notice, an original letter of authorization from the land owner/lessee, stating that the individual has permission to sign this specific Notice on their behalf, shall accompany the Notice of Intention to Drill a Monitor/Piezometer Well form.

2. Construction and abandonment standards for all wells shall be in accordance with A.A.C. R12-15-811 and R12-15-816.

3.. Drilling of the well shall be completed within one year after the date of Notice.

4. A Well Driller Report is required within thirty days of completion of drilling. A Completion Report is required to be filed with the Department within thirty days after installation of pump equipment for monitor wells.

5. Pump equipment **may not** be installed on a well drilled for piezometer purposes. If a monitor will is pumped, pumping is limited to the maximum amount required for monitor purposes, **but in no case may exceed 35 gallons per minute and an annual volume of 10 acre feet total.**

6. A.A.C. Rule R12-15-811.H.2, requires that: "A monitor well shall be identified as such on the vault cover or at the top of the steel casing. Identification information will include well registration number."

7. Special construction standards, required pursuant to A.A.C. Rule R12-15-821: _____

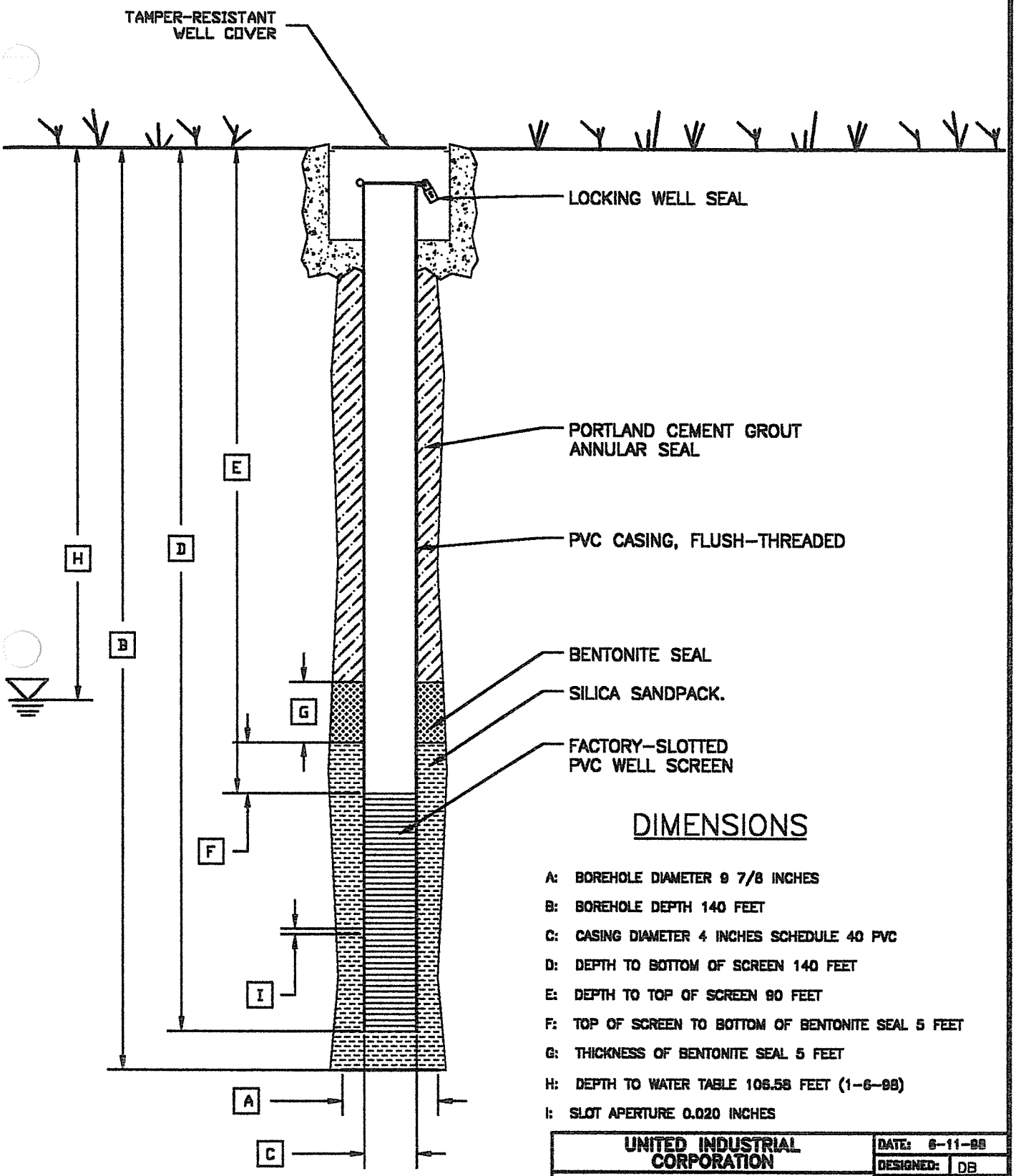

DIMENSIONS

A: BOREHOLE DIAMETER 9 7/8 INCHES

B: BOREHOLE DEPTH 140 FEET

C: CASING DIAMETER 4 INCHES SCHEDULE 40 PVC

D: DEPTH TO BOTTOM OF SCREEN 140 FEET

E: DEPTH TO TOP OF SCREEN 90 FEET

F: TOP OF SCREEN TO BOTTOM OF BENTONITE SEAL 5 FEET

G: THICKNESS OF BENTONITE SEAL 5 FEET

H: DEPTH TO WATER TABLE 106.58 FEET (1-6-98)

I: SLOT APERTURE 0.020 INCHES

* NOT TO SCALE

UNITED INDUSTRIAL CORPORATION	DATE: 6-11-98
	DESIGNED: DB
GROUNDWATER MONITOR WELL DIAGRAM MW-102S	CHECKED:
	APPROVED:
	DRAWN: JDD
	PROJ.: N386-111
HSI GEOTRANS A Tetra Tech Company	

_\N6-REPORT\WELL-102S.DWG

MONITOR WELL CONSTRUCTION SUMMARY

Well No. MW-102s

Boring No. X-Ref:

Map Coords: 4050 N, 5413 E

Elevation Ground Level:

Job Number: N386-119

Top of Casing: 1106.02

Drilling Summary:		Construction Time Log: **Start 10/23/97**			**Finish 10/27/97**	
Total Depth	140 feet		Date	Time	Date	Time
Borehole Diameter	9 7/8 inches	Drilling (9 7/8")	11/7/97	9:00	11/10/97	13:15
Casing Stick-Up	0					
Driller	Stewart Brothers Drilling Co.					
Rig	Gardner Denver 1500					
Bit(s)	0-155 feet: 9 7/8" tricone	Geophys. Logging				
Drilling Fluid	Bentonite mud	Casing:	11/10/97	14:30	11/10/97	17:45
Protective Casing	None					
Comments: Based on geophysical logging results of MW-102m,						
MW-102s was drilled and installed to a depth of 150 feet.						
		Sand Pack:	11/10/97	15:45	11/10/97	17:45
		Cementing:	11/11/97	11:00	11/11/97	13:30
		Development:	11/11/97	7:30	1/22/98	9:30

Well Design & Specifications

Basis: Geologic Log x Geophysical Log x

Casing String(s): C = Casing S = Screen

Well Development: Well was bailed by the driller prior to and after grouting. The monitor well was developed at a later date using a 4" submersible pump. The pump was raised and lowered to surge the well.

Depth (ft)	String (C1, S1, etc.)	Elevation (ft)
0 to 95	C1 - 4" Sch 40 PVC	
95 to 135	S1 - 4" Sch 40 PVC	
to		
to		

Casing: C1	4" Schedule 40 PVC blank casing
Screen: S1	4" Schedule 40 PVC factory 0.020"
Filter Pack:	90'-140: 8-12 Colorado silica sand.
Grout Seal:	0-85': neat cement with 3.5% bentonite
Seal:	85'-90' Bentonite pellets

Stabilization Test Data:

Time	pH	Spec. Cond. μs/m	Temp (C)
8:08	8.00	983.	18.6
8:35	8.10	972	18.7
8:55	7.98	951	20.1
9:05	8.00	982	20.1

Site Name: West Osborn Complex

Location: 3605 West Osborn Road

Supervised By: David Broermann

Date: 3/26/98

STATE OF ARIZONA
DEPARTMENT OF WATER RESOURCES
GROUNDWATER MANAGEMENT SUPPORT SECTION
MAIL TO: P.O. BOX 458, PHOENIX, ARIZONA 85001-0458
500 NORTH THIRD STREET, PHOENIX, ARIZONA 85004-3903
PHONE (602) 417-2470 FAX (602) 417-2422

MW-102 S

RECEIVED
SEP 18 1997
GROUNDWATER MGT

NOTICE OF INTENTION TO DRILL MONITOR/PIEZOMETER WELL

PLEASE READ GENERAL INSTRUCTIONS ON REVERSE SIDE OF THIS FORM BEFORE COMPLETING.

Section §45-596, Arizona Revised Statues provide: Prior to drilling a monitor or piezometer well, a Notice of Intention to Drill shall be filed with the Department.

1 Well/Land Location:

2N (Township) 2E (Range) 27 (Section)

NE ¼ (10 Acre) NE ¼ (40 Acre) SE ¼ (160 Acre)

2. Position location of the well on the land:

Latitude 33 o 29 ' 12 "

Longitude 112 o 08 ' 07 "

3. County: Maricopa

4. Owner of well:
United Industrial Corporation
Name
4665 South Ash
Address
Tempe (City) Az (State) 85282 (Zip)

Phone Number (602) 839-2800

5. Lessee of the land of wellsite:

NA
Name

Address

City Sate Zip

Telephone Number

6. Owner of the land of wellsite:
Frank Soris
Name
3505 West Osborn Road
Address
Phoenix (City) Az. (Sate) 85019 (Zip)

Telephone Number 602-278-0931

7. Consulting firm:

HSI GeoTrans, Inc.
Name
David Broermann
Contact Person
(602) 839-2800
Phone Number

8. Purpose of well drilled pursuant to this notice:
Monitor XXXXXX
Piezometer

9. If for deepening or modifying, list well registration number:
55-

FOR DEPARTMENT USE ONLY
File No. A(2-2)27dca
Filed 9-15-97 By
Input By
DUPLICATE
Mailed 10/7/97 By
Registration 55- 604733
AMA/INA PRU
W/S 07 S/B 04

10. Will this proposed well be associated with a permit: Yes ___ No XX
If yes, Permit No. ___

11. Construction will start:
October (Month) 10 (Day) 1997 (Year)

12. Period well will remain in use:
10 Month/Years

13. For monitoring wells, is pump equipment to be installed?
Yes XXXX No ___
(a) If yes, design pump capacity:
10 - 15 GPM
(b) What use will be made of the water:
Sampled and disposed

14. Drilling Firm:
Stewart Brothers Drilling Co.
Name
P.O. Box 2067
Address
Milans (City) NM (State) 87021 (Zip)

1-505-287-2986
Telephone Number
314
DWR License Number
A-4
ROC License Category

VARIANCE GRANTED

SPECIAL REQUIREMENT

15. Proposed method of abandonment of well after project is completed: In accordance with A.A.C. R12-15-811, pursuant to R12-15-816

16. Is this well to monitor existing contamination? ___ **Potential contamination** XX **.Please explain:** Monitor wells will monitor potential-existing contamination previously identified in other monitor wells.

I state that this Notice is filed in compliance with Rule A.A.C. R12-15-809 and R12-15-816(F), and is complete and correct to the best of my knowledge and belief and that I understand the limitations and conditions set forth on the reverse side of this form.

Frank Soris — Typed or Printed Name

Signature [X] Land Owner [ ] Lessee of Wellsite

Sept 16, 1997 — Date

17. If construction plans have been coordinated with Arizona Department of Environmental Quality, who is the agency contact? Ms. AnaVargas

If construction plans have been coordinated with Arizona Department of Water Resources, who is the agency contact? None

. WELL CONSTRUCTION PLAN:

a) Drilling method (mud rotary, hollow-stem auger, etc.) Mud Rotary

b) Borehole diameters: ~~12 1/4~~ inches from ~~0 1/4~~ feet to ~~25 1/4~~ feet.
7 7/8 inches from 0 ~~25~~ feet to 130 feet.

c) Casing materials (PVC, steel, hollow-stem auger, etc.)

material Schedule 40 PVC diameter 4 inches from 0 feet to 90 feet.
material _____ diameter _____ inches from _____ feet to _____ feet.

d) Method of sealing at reductions grout seal

e) Annular seal materials (cement, grout, etc.); method of placement (tremied, circulated):

material cement grout method tremied from 0 feet to 80 feet.
material bentonite method tremied from 80 feet to 85 feet.

f) Filter packs (state material):
material silica sand from 85 feet to 130 feet.
material _____ from _____ feet to _____ feet.

g) Perforation or screen specification:

type 4-inch, schedule 40 PVC from 90 feet to 130 fee
type _____ from _____ feet to _____ feet.

h) Method of well development (bail, air lift, surge) Air-lift, jet, surge and pump

i) Will surface or conductor casing extend above grade? Yes _____ No XXXX

. Include detailed construction diagram showing expected water depth in feet below land surface, and details of vault, if specified.

GENERAL INSTRUCTION

1. Please submit two original notices, with original signatures, and check or money order (no cash) in the amount of $ 10.00, to P.O. Box 458, Phoenix, Arizona 85001-0458 or hand deliver to 500 North Third Street, Phoenix, Arizona 85004-3903.

CONDITIONS

1. If an individual other than the land owner or lessee, signs this notice, an original letter of authorization from the land owner/lessee, stating that the individual has permission to sign this specific Notice on their behalf, shall accompany the Notice of Intention to Drill a Monitor/Piezometer Well form.

2. Construction and abandonment standards for all wells shall be in accordance with A.A.C. R12-15-811 and R12-15-816.

3. Drilling of the well shall be completed within one year after the date of Notice.

4. A Well Driller Report is required within thirty days of completion of drilling. A Completion Report is required to be filed with the Department within thirty days after installation of pump equipment for monitor wells.

5. Pump equipment may not be installed on a well drilled for piezometer purposes. If a monitor will is pumped, pumping is limited to the maximum amount required for monitor purposes, but in no case may exceed 35 gallons per minute and an annual volume of 18 acre feet total.

6. A.A.C. Rule R12-15-811.H.2, requires that: "A monitor well shall be identified as such on the vault cover or at the top of the steel casing. Identification information will include well registration number."

7. Special construction standards, required pursuant to A.A.C. Rule R12-15-821: _____

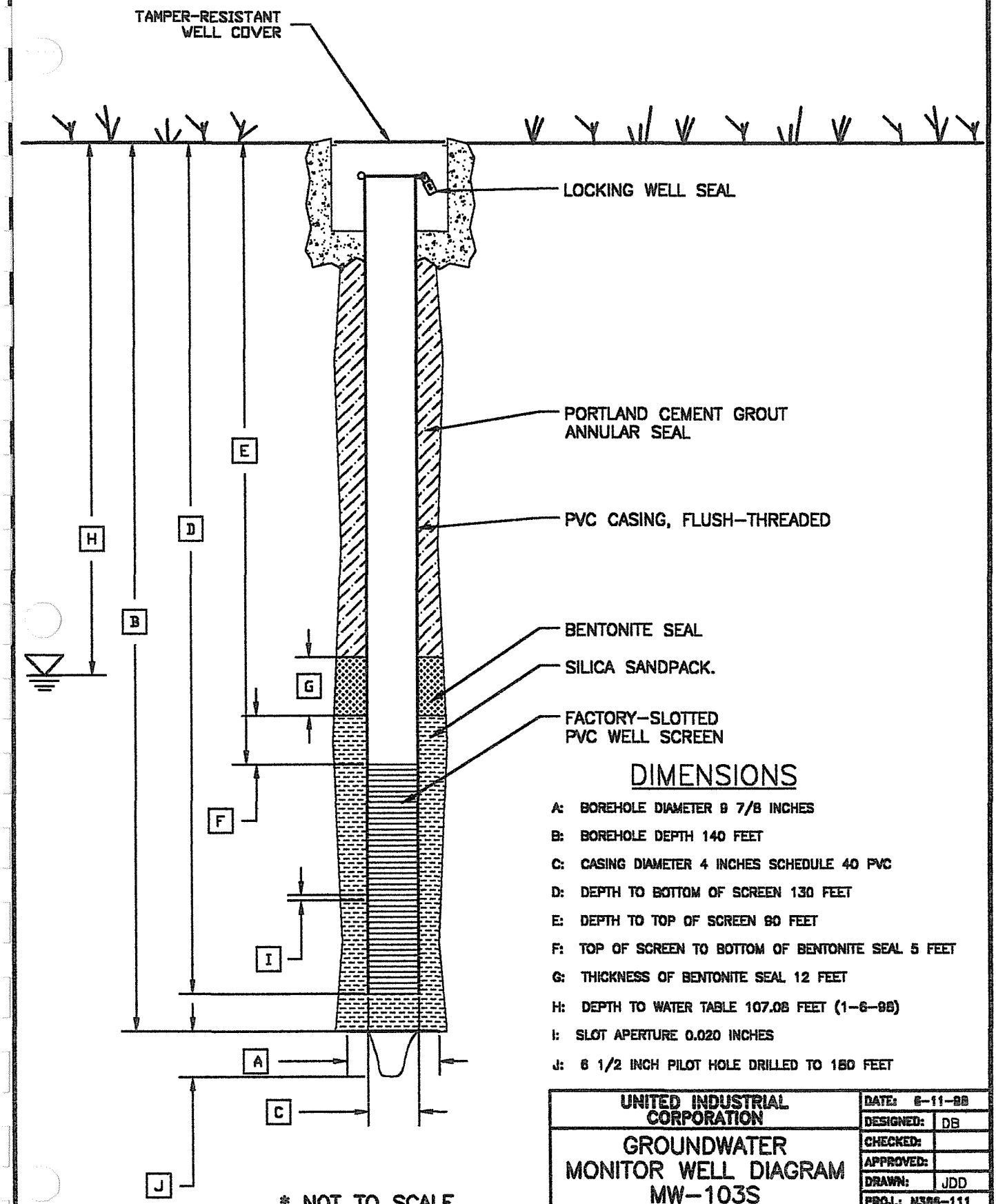

DIMENSIONS

A: BOREHOLE DIAMETER 9 7/8 INCHES

B: BOREHOLE DEPTH 140 FEET

C: CASING DIAMETER 4 INCHES SCHEDULE 40 PVC

D: DEPTH TO BOTTOM OF SCREEN 130 FEET

E: DEPTH TO TOP OF SCREEN 90 FEET

F: TOP OF SCREEN TO BOTTOM OF BENTONITE SEAL 5 FEET

G: THICKNESS OF BENTONITE SEAL 12 FEET

H: DEPTH TO WATER TABLE 107.08 FEET (1-6-98)

I: SLOT APERTURE 0.020 INCHES

J: 6 1/2 INCH PILOT HOLE DRILLED TO 150 FEET

UNITED INDUSTRIAL CORPORATION	DATE: 6-11-98
	DESIGNED: DB
GROUNDWATER MONITOR WELL DIAGRAM MW-103S	CHECKED:
	APPROVED:
	DRAWN: JDD
	PROJ.: N386-111
HSI GEOTRANS A Tetra Tech Company	

..\HI-REPORT\WELL-103S.DWG

HSI GEOTRANS

Site Map

Project No: N386-119

Client: UIC

Site: WOC

Borehole No: MW-103s

Start Date/Time: 12/9/97 12:00

End Date/Time: 12/10/97 11:30

Logged By: David Broermann

Drilling Method: Mud Rotary

Borehole Diameter: 9 7/8 inches

Angle from Vertical:

Datum:

Surface Conditions: Concrete

Depth	Sample Number	Sample Type (SS=Split Spoon, C=Cuttings, O=Other)	Blow Counts/6"	Inches Driven	Inches Recovered	PID (ppm)	Lithology	Description and Comments
0								Ground Surface
5	1	C						**SILTY SAND SANDY SILT (SM-ML)** Brown, fine to coarse sand, silt, trace coarse sand
10								
15	2	C						**SILTY SAND (SM)** Brown, fine to coarse sand (80-90%), silt (10-15%), trace gravel (<5%), subangular coarse sand and gravel
20								
25	3	C						**SILTY SAND (SM)** Brown, fine to coarse sand, silt, trace clay
30								
35	4	C						**SILTY SAND (SM)** Brown to light brown, fine to coarse sand, silt, trace clay and caliche
40								
45	5	C						**SILTY SAND SANDY SILT (SM-ML)** Brown, fine to coarse sand, silt, coarse sand is angular to subangular, trace clay and some caliche
50								

Drilling Contractor: Stewart Brothers

Checked By:

Date Checked:

HSI GeoTrans, Inc.
4665 South Ash Avenue, Suite G-1
Tempe, Arizona 85282
Voice: 602-839-2800 Fax: 602-839-2828

HSI GEOTRANS

Site Map

Project No: N386-119

Client: UIC

Site: WOC

Borehole No: MW-103s

Start Date/Time: 12/9/97 12:00

End Date/Time: 12/10/97 11:30

Logged By: David Broermann

Drilling Method: Mud Rotary

Borehole Diameter: 9 7/8 inches

Angle from Vertical:

Datum:

Surface Conditions: Concrete

Depth	Sample Number	Sample Type (SS=Split Spoon, C=Cuttings, O=Other)	Blow Counts/6"	Inches Driven	Inches Recovered	PID (ppm)	Lithology	Description and Comments
55	6	C						**SAND (SM)** Brown, fine to coarse sand, trace silt and clay and caliche
60								
65	7	C						**SILTY SAND (SM)** Brown, fine to coarse sand, silt (10-15%), angular-coarse sand, trace coarse sand 1/4
70								
75	8	C						**SILTY SAND (SM)** Brown, fine to coarse sand, silt, rounded to angular sand, trace caliche
80								
85	9	C						**SILTY SAND (SM)** Brown, fine to coarse sand, silt, increase percent of coarse sand, trace caliche, and trace to some gravel
90								
95	10	C						**SILTY CLAYEY SAND (SM-SC)** Brown, fine to coarse sand, silt and clay (30-40%), sand (60-70%), trace caliche
100								

Drilling Contractor: Stewart Brothers

Checked By:

Date Checked:

Sheet: 2 of 4

HSI GeoTrans, Inc.
4665 South Ash Avenue, Suite G-1
Tempe, Arizona 85282
Voice: 602-839-2800 Fax: 602-839-2828

HSI GEOTRANS

Site Map

Project No: N386-119

Client: UIC

Site: WOC

Borehole No: MW-103s

Start Date/Time: 12/9/97 12:00

End Date/Time: 12/10/97 11:30

Logged By: David Broermann

Drilling Method: Mud Rotary

Borehole Diameter: 9 7/8 inches

Angle from Vertical:

Datum:

Surface Conditions: Concrete

Depth	Sample Number	Sample Type (SS=Split Spoon, C=Cuttings, O=Other)	Blow Counts/6"	Inches Driven	Inches Recovered	PID (ppm)	Lithology	Description and Comments
105	11	C						**SILTY SAND SANDY SILT (SM-ML)** Brown, fine to medium sand, silt
110								
115	12	C						**SANDY SILT SILTY SAND (ML-SM)** Brown, silt, fine to medium sand, coarse sand <1/4", angular to rounded sand,
120								
125	13	C						**SILTY CLAYEY SAND (SM)** Brown, sand fine to medium, silt, clay, some to trace coarse sand
130								
135	14	C						**SILTY SAND** Brown, fine to medium sand, silt, trace clay, trace to some coarse sand
140								
145	15	C						**SANDY SILT some clay (ML)** Brown, silt, very fine sand, clay
150								

Drilling Contractor: Stewart Brothers

Checked By:

Date Checked:

Sheet: 3 of 4

HSI GeoTrans, Inc.
4665 South Ash Avenue, Suite G-1
Tempe, Arizona 85282
Voice: 602-839-2800 Fax: 602-839-2828

HSI GEOTRANS

Site Map

Project No: N386-119

Client: UIC

Site: WOC

Borehole No: MW-103s

Start Date/Time: 12/9/97 12:00

End Date/Time: 12/10/97 11:30

Logged By: David Broermann

Drilling Method: Mud Rotary

Borehole Diameter: 9 7/8 inches

Angle from Vertical:

Datum:

Surface Conditions: Concrete

Depth	Sample Number	Sample Type (SS=Split Spoon, C=Cuttings, O=Other)	Blow Counts/6"	Inches Driven	Inches Recovered	PID (ppm)	Lithology	Description and Comments
155	16	C						**SAND some silt (SM)** Brown, very fine to coarse sand, silt
160								
165	17	C						**SANDY SILT trace clay (ML)** Brown, silt, fine to medium sand, trace clay
170								
175	18	C						**SANDY SILT trace clay (ML)** Brown to light brown, silt, fine sand, trace caliche and clay
180								Total Depth 180'
185								
190								
195								
200								

Drilling Contractor: Stewart Brothers

Checked By:

Date Checked:

Sheet: 4 of 4

HSI GeoTrans, Inc.
4665 South Ash Avenue, Suite G-1
Tempe, Arizona 85282
Voice: 602-839-2800 Fax: 602-839-2828

MONITOR WELL CONSTRUCTION SUMMARY

Well No. MW-103s
Boring No. X-Ref:
Elevation Ground Level:
Top of Casing: 1100.81

Map Coords: 3113 N, 6039 E
Job Number: N386-119

Drilling Summary:	
Total Depth	140 feet
Borehole Diameter	9 7/8 inches
Casing Stick-Up	0
Driller	Stewart Brothers Drilling Co.
Rig	Gardner Denver 1500
Bit(s)	0-180 feet: 6 1/2" tricone 0-140 feet: 9 7/8" tricone
Drilling Fluid	Bentonite mud
Protective Casing	None

Comments: Pilot hole drilled to a depth of 180 feet. Pilot hole was logged, and then reamed to 9 7/8" to a depth of 140 feet.

Construction Time Log:	Start		Finish	
	Date	Time	Date	Time
Drilling (6 1/2")	12/9/97	12:00	12/10/97	10:15
(9 7/8")	12/10/97	11:30	12/10/97	14:00
Geophys. Logging	12/10/97	10:45	12/10/97	11:30
Casing:	12/11/97	9:30	12/11/97	10:30
Sand Pack:	12/11/97	10:30	12/11/97	12:00
Cementing:	12/11/97	14:00	12/11/97	16:00
Development:	12/11/97	12:00	1/21/98	1230

Well Design & Specifications

Basis: Geologic Log x Geophysical Log x

Casing String(s): C = Casing S = Screen

Depth (ft)	String (C1, S1, etc.)	Elevation (ft)
0 to 90	C1 4" Sch 40 PVC	
90 to 130	S1 4" Sch 40 PVC	
to		
to		
to		

Casing: C1	4" Schedule 40 PVC blank casing
C2	
Screen: S1	4" Schedule 40 PVC factory 0.020"
S2	
Filter Pack:	85'-135': 8-12 Colorado silica sand.
Grout Seal:	0-73': neat cement with 3.5% bentonite
Seal:	73'-85' Bentonite pellets

Well Development: Well was bailed for two hours prior to grouting. MW-103s was further developed at a later date. The pump was raised and lowered to surge and purge at the same time.

Stabilization Test Data:

Time	pH	Spec. Cond. μs/m	Temp (C)
11:03	7.22	1252	22.2
11:21	7.9	1281	21.0
12:05	7.9	1237	22.9
12:25			

Stopped pumping for surging and turbidity lowered.

Site Name: West Osborn Comples

Location: 35th Avenue and Earll

Supervised By: David Broermann

Date: 3/26/98

STATE OF ARIZONA
DEPARTMENT OF WATER RESOURCES
GROUNDWATER MANAGEMENT SUPPORT SECTION

500 NORTH THIRD STREET, PHOENIX, ARIZONA 85004-3903
PHONE (602) 417-2470 FAX (602) 417-2422

RECEIVED
OCT - 9 1997
GROUNDWATER MGT

NOTICE OF INTENTION TO DRILL MONITOR/PIEZOMETER WELL

Section §45-596. Arizona Revised Statues provide: Prior to drilling a monitor or piezometer well, a Notice of Intention to Drill shall be filed with the Department.

1. Well/Land Location: (MW-103S)
2N 1E 26
Township Range Section

SW ¼ NW ¼ SW ¼
10 Acre 40 Acre 160 Acre

2. Position location of the well on the land:

Latitude 33 o 29 ' 073 "

Longitude 112 o 08 ' 009 "

3. County: _____

4. Owner of the well:

United Industrial Corporation
Name
1615 L Street, NW, Suite 700
Address
Washington, DC 20036
City Sate Zip
Phone Number 202-682-7210

5. Lessee of the land of wellsite:

Name

Address

City Sate Zip
Phone Number

6. Owner of Land and Wellsite:

City of Phoenix
Name
200 West Washington Street
Address
Phoenix, Arizona 85003-1611
City State Zip
Phone Number

7. Consulting firm:

HSI GeoTrans, Inc.
Name
David Broermann
Contact Person
602-839-2800
Phone Number

8. Purpose of well drilled pursuant to this notice:
Monitor X
Piezometer _____

9. If for deepening or modifying, list well registration number:
55-_____

DO NOT WRITE IN THIS SPACE
OFFICE RECORD
File No. A(2-)26 CBC
Filed 10-9-97 By [illegible]
Input NOV 12 1997
DUPLICATE
Mailed 10-21-97 By [illegible]
Registration 55- 564982
AMA/INA DNA
W/S 07 S/B 04

10. Construction will start:
October 1, 1997
Month Day Year

11. Period well will remain in use:
20 ~~Month~~ Years

12. For monitoring wells, is pump equipment to be installed?
Yes _____ No X
(a) If yes, design pump capacity:

(b) What use will be made of the water:

13. Drilling Firm:

Stewart Brothers Drilling Company
Name

P.O. Box 2067
Address

Milan, NM 87021 -2067
City State Zip

1-505-287-2986
Telephone Number

314
DWR License Number

A-4
ROC License Category

Proposed method of abandonment of well after project is completed: In accordance with A.A.C. R12-15-811, pursuant to R12-15-816

Is this well to monitor existing contamination? _____ Potential contamination XX .Please explain: Monitor wells will monitor potential-existing contamination previously identified in other monitor wells.

I state that this Notice is filed in compliance with Rule A.A.C. R12-15-809 and R12-15-816(F), and is complete and correct to the best of my knowledge and belief and that I understand the limitations and conditions set forth on the reverse side of this form.

Thomas E. Callow, Assistant Director, Street Transportation — Thomas E. Callow — 10-1-97
Signed or Printed Name — Signature [X] Land Owner [ ] Lessee of Wellsite — Date

[illegible] Department [illegible] mental Quality, who is the agency contact? ____
Ms. Ana Vargas

If construction plans have been coordinated with Arizona Department of Water Resources, who is the agency contact? None

18. WELL CONSTRUCTION PLAN:

Drilling method (mud rotary, hollow-stem auger, etc.) Mud Rotary

b) Borehole diameters: 12 inches from 0 feet to 25 feet.
7 7/8 inches from 25 feet to 80 feet.

c) Casing materials (PVC, steel, hollow-stem auger, etc.)

material Schedule 40 Steel diameter 4 inches from 0 feet to 20 feet.
material Schedule 40 PVC diameter 4 inches from 20 feet to 90 feet.

d) Method of sealing at reductions grout seal

e) Annular seal materials (cement, grout, etc.); method of placement (tremied, circulated):

material cement grout method tremied from 0 feet to 80 feet.
material bentonite method tremied from 80 feet to 85 feet.

f) Filter packs (state material):
material silica sand from 85 feet to 130 feet.
material ____ from ____ feet to ____ feet.

g) Perforation or screen specification:

type 4-Inch, schedule 40 PVC from 90 feet to 130 feet.
type ____ from ____ feet to ____ feet.

h) Method of well development (bail, air lift, surge) Air-lift, jet, surge and pump

i) Will surface or conductor casing extend above grade? Yes ____ No XXXX

19. Include detailed construction diagram showing expected water depth in feet below land surface, and details of vault, if specified.

GENERAL INSTRUCTION

1. Please submit two original notices, with original signatures, and check or money order (no cash) in the amount of $ 10.00, to P.O. Box 458, Phoenix, Arizona 85001-0458 or hand deliver to 500 North Third Street, Phoenix, Arizona 85004-3903.

CONDITIONS

1. If an individual other than the land owner or lessee, signs this notice, an original letter of authorization from the land owner/lessee, stating that the individual has permission to sign this specific Notice on their behalf, shall accompany the Notice of Intention to Drill a Monitor/Piezometer Well form.

2. Construction and abandonment standards for all wells shall be in accordance with A.A.C. R12-15-811 and R12-15-816.

3. Drilling of the well shall be completed within one year after the date of Notice.

4. A Well Driller Report is required within thirty days of completion of drilling. A Completion Report is required to be filed with the Department within thirty days after installation of pump equipment for monitor wells.

5. Pump equipment may not be installed on a well drilled for piezometer purposes. If a monitor will is pumped, pumping is limited to the maximum amount required for monitor purposes, but in no case may exceed 35 gallons per minute and an annual volume of 10 acre feet total.

6. A.A.C. Rule R12-15-811.H.2, requires that: "A monitor well shall be identified as such on the vault cover or at the top of the steel casing. Identification information will include well registration number."

7. [illegible]ecial construction standards, required pursuant to A.A.C. Rule R12-15-821: ____

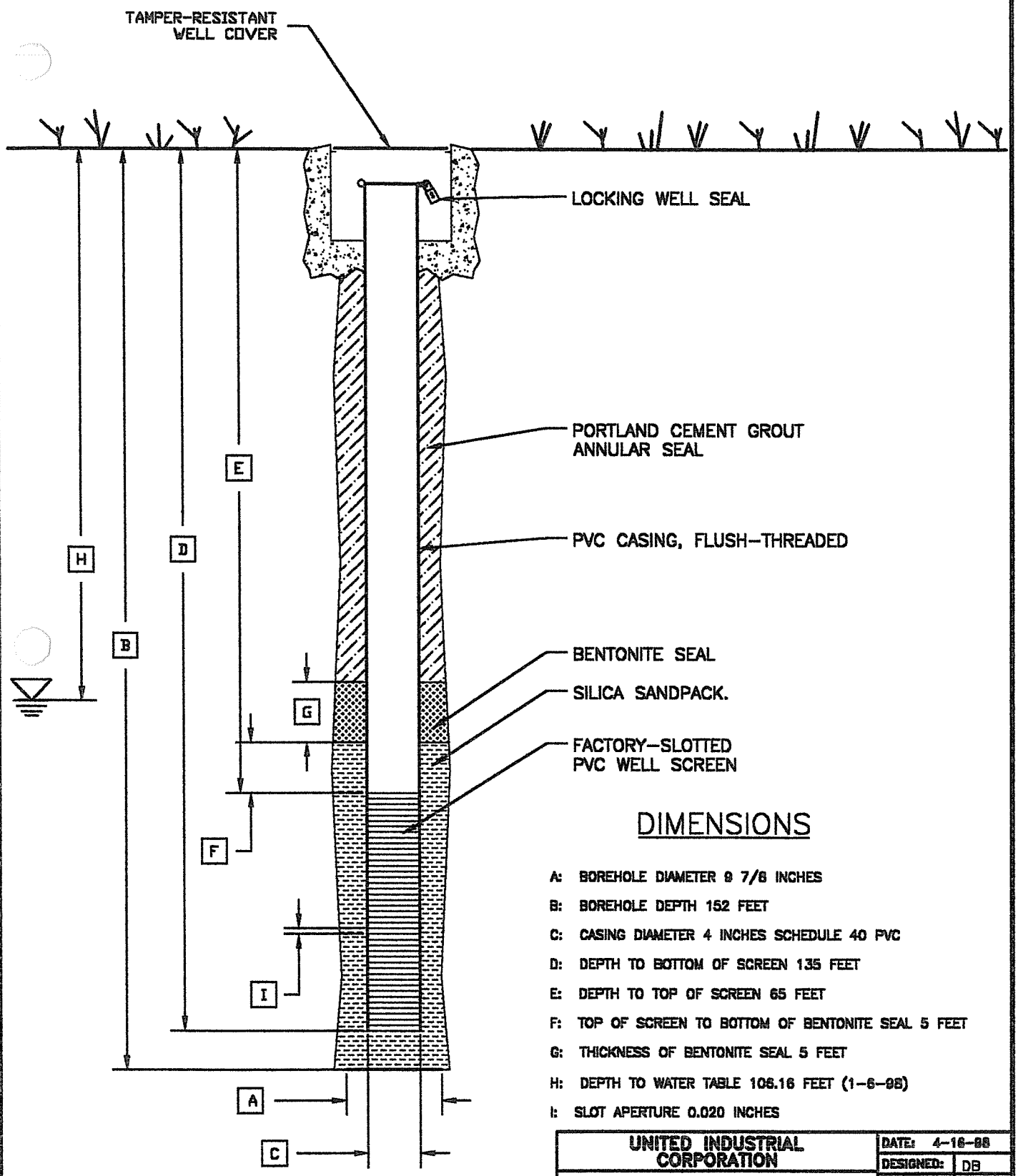

DIMENSIONS

A: BOREHOLE DIAMETER 9 7/8 INCHES

B: BOREHOLE DEPTH 152 FEET

C: CASING DIAMETER 4 INCHES SCHEDULE 40 PVC

D: DEPTH TO BOTTOM OF SCREEN 135 FEET

E: DEPTH TO TOP OF SCREEN 65 FEET

F: TOP OF SCREEN TO BOTTOM OF BENTONITE SEAL 5 FEET

G: THICKNESS OF BENTONITE SEAL 5 FEET

H: DEPTH TO WATER TABLE 106.16 FEET (1-6-98)

I: SLOT APERTURE 0.020 INCHES

* NOT TO SCALE

UNITED INDUSTRIAL CORPORATION	DATE: 4-16-98
	DESIGNED: DB
GROUNDWATER MONITOR WELL DIAGRAM MW-104S	CHECKED:
	APPROVED:
	DRAWN: JDD
	PROJ.: N421-101
HSI GEOTRANS A Tetra Tech Company	

P:\...\RI-REPORT\WELL-104S.DWG

HSI GEOTRANS

Site Map

Project No: N386-119

Client: UIC

Site: WOC

Borehole No: MW-104s

Start Date/Time: 11/20/97 12:15

End Date/Time: 11/21/97 11:30

Logged By: David Broermann

Drilling Method: Mud Rotary

Borehole Diameter: 9 7/8 inches

Angle from Vertical:

Datum:

Surface Conditions: Concrete

Depth	Sample Number	Sample Type (SS=Split Spoon, C=Cuttings, O=Other)	Blow Counts/6"	Inches Driven	Inches Recovered	PID (ppm)	Lithology	Description and Comments
0								Ground Surface
5	1	C						**SILTY SAND SANDY SILT (SM-ML)** Brown, fine to medium sand, silt, trace coarse sand
10								
15	2	C						**SILTY SAND (SM)** Brown, fine to coarse sand (80-90%), silt (10-15%), trace gravel (<5%), subangular coarse sand and gravel
20								
25	3	C						**SILTY SAND (SM)** Brown, fine to coarse sand, silt, trace clay
30								
35	4	C						**SILTY SAND (SM)** Brown to light brown, fine to coarse sand, silt, trace clay and caliche
40								
45	5	C						**SILTY SAND SANDY SILT (SM-ML)** Brown, fine to coarse sand, silt, angular to subangular coarse sand, trace clay and some caliche
50								

Drilling Contractor: Stewart Brothers

Checked By:

Date Checked:

HSI GeoTrans, Inc.
4665 South Ash Avenue, Suite G-1
Tempe, Arizona 85282
Voice: 602-839-2800 Fax: 602-839-2828

HSI GEOTRANS

Site Map

Project No: N386-119

Client: UIC

Site: WOC

Borehole No: MW-104s

Start Date/Time: 11/20/97 12:15

End Date/Time: 11/21/97 11:30

Logged By: David Broermann

Drilling Method: Mud Rotary

Borehole Diameter: 9 7/8 inches

Angle from Vertical:

Datum:

Surface Conditions: Concrete

Depth	Sample Number	Sample Type (SS=Split Spoon, C=Cuttings, O=Other)	Blow Counts/6"	Inches Driven	Inches Recovered	PID (ppm)	Lithology	Description and Comments
55–60	6	C						**SAND (SM)** Brown, fine to coarse sand, trace silt and clay and caliche
65–70	7	C						**SILTY SAND (SM)** Brown, fine to coarse sand, silt (10-15%), angular-coarse sand, trace coarse sand 1/4
75–80	8	C						**SILTY SAND some gravel (SM)** Brown, fine to coarse sand, silt, rounded to angular sand, some angular and subrounded gravel, trace caliche
85–90	9	C						**SILTY SAND (SM)** Brown, fine to coarse sand, silt, increase percent of coarse sand, trace caliche, and trace to some gravel
95–100	10	C						**SILTY CLAYEY SAND (SM-SC)** Brown, fine to coarse sand, silt and clay (30-40%), sand (60-70%), trace caliche

Drilling Contractor: Stewart Brothers

Checked By:

Date Checked:

HSI GeoTrans, Inc.
4665 South Ash Avenue, Suite G-1
Tempe, Arizona 85282
Voice: 602-839-2800 Fax: 602-839-2828

HSI GEOTRANS

Site Map

Project No: N386-119

Client: UIC

Site: WOC

Borehole No: MW-104s

Start Date/Time: 11/20/97 12:15

End Date/Time: 11/21/97 11:30

Logged By: David Broermann

Drilling Method: Mud Rotary

Borehole Diameter: 9 7/8 inches

Angle from Vertical:

Datum:

Surface Conditions: Concrete

Depth	Sample Number	Sample Type (SS=Split Spoon, C=Cuttings, O=Other)	Blow Counts/6"	Inches Driven	Inches Recovered	PID (ppm)	Lithology	Description and Comments
106	11	C						**SILTY SAND some gravel (SM)** Brown, fine to coarse sand, silt, some gravel
111–116	12	C						**SILTY SAND some gravel (SM)** Brown, silty sand, fine to coarse sand, some gravel, angular to rounded sand and gravel,
121–126	13	C						**SILTY SAND (SM)** Brown, fine to coarse silt, sand, trace gravel, trace clay
131–136	14	C						**SILTY SAND (SM)** Brown, fine to coarse sand, silt, trace clay and gravel
141–146	15	C						**SILTY SAND (SM)** Brown, very fine to coarse sand, silt, trace clay and gravel
151								**SAND some silt (SM)** Brown, very fine to coarse sand, some silt

Drilling Contractor: Stewart Brothers

Checked By:

Date Checked:

HSI GeoTrans, Inc.
4665 South Ash Avenue, Suite G-1
Tempe, Arizona 85282
Voice: 602-839-2800 Fax: 602-839-2828

HSI GEOTRANS

Site Map

Project No: N386-119

Client: UIC

Site: WOC

Borehole No: MW-104s

Start Date/Time: 11/20/97 12:15

End Date/Time: 11/21/97 11:30

Logged By: David Broermann

Drilling Method: Mud Rotary

Borehole Diameter: 9 7/8 inches

Angle from Vertical:

Datum:

Surface Conditions: Concrete

Depth	Sample Number	Sample Type (SS=Split Spoon, C=Cuttings, O=Other)	Blow Counts/6"	Inches Driven	Inches Recovered	PID (ppm)	Lithology	Description and Comments
155	16	C						**SAND some silt (SM)** Brown, very fine to coarse sand, some silt
160								Total Depth 390'
165								
170								
175								
180								
185								
190								
195								
200								

Drilling Contractor: Stewart Brothers

Checked By:

Date Checked:

Sheet: 4 of 4

HSI GeoTrans, Inc.
4665 South Ash Avenue, Suite G-1
Tempe, Arizona 85282
Voice: 602-839-2800 Fax: 602-839-2828

MONITOR WELL CONSTRUCTION SUMMARY

Well No. MW-104s

Boring No. X-Ref:

Map Coords: 3214 N, 5023 E

Elevation Ground Level:

Job Number: N386-119

Top of Casing: 1100.36

Drilling Summary:		Construction Time Log: **Start** 11/20/97			**Finish** 11/24/97	
Total Depth	135 feet		Date	Time	Date	Time
Borehole Diameter	9 7/8 inches	Drilling (6 7/8")	11/20/97	12:15	11/20/97	16:15
Casing Stick-Up	0	(9 7/8")	11/21/97	7:30	11/20/97	11:30
Driller	Stewart Brothers Drilling Co.					
Rig	Gardner Denver 1500					
Bit(s)	0-152 feet: 6 1/2" tricone 0-150 feet: 9 7/8" tricone	Geophys. Logging	11/20/97	16:45	11/20/97	19:30
Drilling Fluid	Bentonite mud	Casing:	11/21/97	12:15	11/21/97	13:00
Protective Casing	None					
Comments:						
		Sand Pack:	11/21/97	13:15	11/24/97	10:45
		Cementing:	11/24/97	12:15	11/24/97	14:30
		Development:	11/21/97	12:00	1/21/98	935

Well Design & Specifications

Basis: Geologic Log x Geophysical Log x

Casing String(s): C = Casing S = Screen

Well Development: Well was bailed for 5.75 hours prior to grouting. MW-104s was developed at a later date using a 4" submersible pump. The pump was raised and lowered to surge and purge at the same time

Depth (ft)	String (C1, S1, etc.)	Elevation (ft)
0 to 90	C1 4" sch 40 PVC	
90 to 130	S1 4" sch 40 PVC	
to		
to		
to		

Casing: C1	4" Schedule 40 PVC blank casing
C2	
Screen: S1	4" Schedule 40 PVC factory 0.020"
S2	
Filter Pack:	85'-135': 8-12 Colorado silica sand.
Grout Seal:	0-73': neat cement with 3.5% bentonite
Seal:	73'-85' Bentonite pellets

Stabilization Test Data:

Time	pH	Spec. Cond. μs/m	Temp (C)
9:03	7.91	1058	21.8
9:11	8.00	1015	21.4
9:22	8.12	1037	21.9
9:33	8.09	1030	21.9

Site Name: West Osborn Complex

Location: 36th Avenue and Earl Drive (Alley)

Supervised By: David Broermann

Date: 3/26/98

STATE OF ARIZONA
DEPARTMENT OF WATER RESOURCES
GROUNDWATER MANAGEMENT SUPPORT SECTION
500 NORTH THIRD STREET, PHOENIX, ARIZONA 85004-3903
PHONE (602) 417-2470 FAX (602) 417-2422

RECEIVED OCT - 9 1997 GROUNDWATER MGT

NOTICE OF INTENTION TO DRILL MONITOR/PIEZOMETER WELL

Section §45-596, Arizona Revised Statues provide: Prior to drilling a monitor or piezometer well, a Notice of Intention to Drill shall be filed with the Department.

1 Well/Land Location: (MW-104S)
2N 1E 27
Township Range Section

SW ¼ NE ¼ SE ¼
10 Acre 40 Acre 160 Acre

2. Position location of the well on the land:

Latitude 33 o 29 ' 092 "

Longitude 112 o 08 ' 187 "

3. County: _____

4. Owner of the well:

United Industrial Corporation
Name
1615 L Street, NW, Suite 700
Address
Washington, DC 20036
City Sate Zip
Phone Number 202-682-7210

5. Lessee of the land of wellsite:

Name

Address

City Sate Zip
Phone Number

6. Owner of Land and Wellsite:

City of Phoenix
Name
200 West Washington Street
Address
Phoenix, Arizona 85003-1611
City State Zip
Phone Number

7. Consulting firm:

HSI GeoTrans, Inc.
Name
David Broermann
Contact Person
602-839-2800
Phone Number

8. Purpose of well drilled pursuant to this notice:
Monitor X
Piezometer _____

9. If for deepening or modifying, list well registration number:
55-_____

DO NOT WRITE IN THIS SPACE
OFFICE RECORD
File No. A(2-1)27dac
Filed 10-9-97 By
Input NOV 12 1997 By
DUPLICATE
Mailed 10-21-97 By
Registration 55-564984
AMA/INA DHU
W/S 07 S/B 04

10. Construction will start:
October 1, 1997
Month Day Year

11. Period well will remain in use:
20 ~~Month~~/Years

12. For monitoring wells, is pump equipment to be installed?
Yes _____ No X
(a) If yes, design pump capacity:

(b) What use will be made of the water:

13. Drilling Firm:
Stewart Brothers Drilling Company
Name
P.O. Box 2067
Address
Milan, NM 87021-2067
City State Zip
1-505-287-2986
Telephone Number
314
DWR License Number
A-4
ROC License Category

15. Proposed method of abandonment of well after project is completed: In accordance with A.A.C. R12-15-811, pursuant to R12-15-816

16. Is this well to monitor existing contamination? _____ Potential contamination XX .Please explain: Monitor wells will monitor potential-existing contamination previously identified in other monitor wells.

I state that this Notice is filed in compliance with Rule A.A.C. R12-15-809 and R12-15-816(F), and is complete and correct to the best of my knowledge and belief and that I understand the limitations and conditions set forth on the reverse side of this form.

Thomas E. Callow, Assistant Director, Street Transportation — Thomas E Callow — 10-1-97
Typed or Printed Name — Signature ⋈ Land Owner [ ] Lessee of Wellsite — Date

:onstruction plans have been coordinated with Arizona Department of Environmental Quality, who is the agency contact? AnaVargus

:onstruction plans have been coordinated with Arizona Department of Water Resources, who is the agency contact? None

LL CONSTRUCTION PLAN:

Drilling method (mud rotary, hollow-stem auger, etc.) Mud Rotary

Borehole diameters: 12 inches from 0 feet to 25 feet.
7 7/8 inches from 25 feet to 80 feet.

Casing materials (PVC, steel, hollow-stem auger, etc.)

material Schedule 40 Steel diameter 4 inches from 0 feet to 20 feet.
material Schedule 40 PVC diameter 4 inches from 20 feet to 90 feet.

Method of sealing at reductions grout seal

Annular seal materials (cement, grout, etc.); method of placement (tremied, circulated):

material cement grout method tremied from 0 feet to 80 feet.
material bentonite method tremied from 80 feet to 85 feet.

Filter packs (state material):
material silica sand from 85 feet to 130 feet.
material _____ from _____ feet to _____ feet.

Perforation or screen specification:

type 4-Inch, schedule 40 PVC from 90 feet to 130 feet.
type _____ from _____ feet to _____ feet.

) Method of well development (bail, air lift, surge) Air-lift, jet, surge and pump

V urface or conductor casing extend above grade? Yes _____ No XXXX

ıclude detailed construction diagram showing expected water depth in feet below land surface, and details of vault, if specified.

GENERAL INSTRUCTION

'lease submit two original notices, with original signatures, and check or money order (no cash) in the amount of $ 10.00, to P.O. 458, Phoenix, Arizona 85001-0458 or hand deliver to 500 North Third Street, Phoenix, Arizona 85004-3903.

CONDITIONS

an individual other than the land owner or lessee, signs this notice, an original letter of authorization from the land owner/lessee, ıting that the individual has permission to sign this specific Notice on their behalf, shall accompany the Notice of Intention to Drill Monitor/Piezometer Well form.

onstruction and abandonment standards for all wells shall be in accordance with A.A.C. R12-15-811 and R12-15-816.

rilling of the well shall be completed within one year after the date of Notice.

Well Driller Report is required within thirty days of completion of drilling. A Completion Report is required to be filed with the Department within thirty days after installation of pump equipment for monitor wells.

ump equipment may not be installed on a well drilled for piezometer purposes. If a monitor will is pumped, pumping is limited to the maximum amount required for monitor purposes, but in no case may exceed 35 gallons per minute and an annual volume of 10 acre feet total.

.A.C. Rule R12-15-811.H.2, requires that: "A monitor well shall be identified as such on the vault cover or at the top of the steel casing. ıde ification information will include well registration number."

pecial construction standards, required pursuant to A.A.C. Rule R12-15-821: _____

R 55-44A (Rev 3/96)

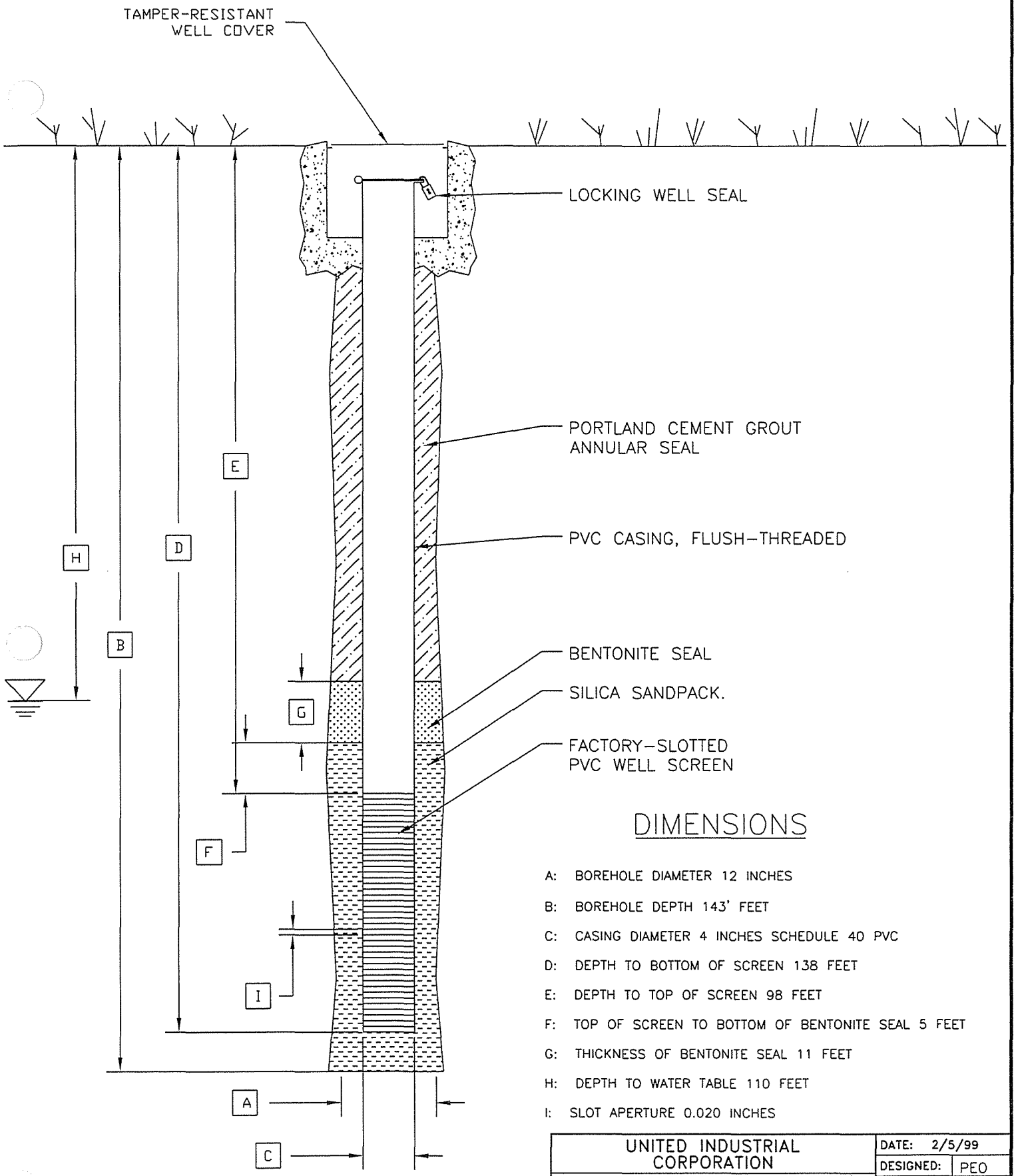

DIMENSIONS

A: BOREHOLE DIAMETER 12 INCHES

B: BOREHOLE DEPTH 143' FEET

C: CASING DIAMETER 4 INCHES SCHEDULE 40 PVC

D: DEPTH TO BOTTOM OF SCREEN 138 FEET

E: DEPTH TO TOP OF SCREEN 98 FEET

F: TOP OF SCREEN TO BOTTOM OF BENTONITE SEAL 5 FEET

G: THICKNESS OF BENTONITE SEAL 11 FEET

H: DEPTH TO WATER TABLE 110 FEET

I: SLOT APERTURE 0.020 INCHES

* NOT TO SCALE

UNITED INDUSTRIAL CORPORATION	DATE: 2/5/99
	DESIGNED: PEO
MONITOR WELL MW-201S SCHEMATIC	CHECKED: PEO
	APPROVED: SAS
	DRAWN: JDD
	PROJ.: N386-301
HSI GEOTRANS A Tetra Tech Company	

P:\...\ZZ-WELLS_SCHEM\MW-201S.DWG

Site Map	**Project No:** N386-301 **Client:** UIC **Site:** WOC	**Borehole No: MW-201S** **Start Date/Time:** 1/7/99 11:00 **End Date/Time:** 1/10/99 12:00 **Logged By:** Mr. Phil Odenkirk
	Drilling Method: CME-75 Hollow stem auger **Borehole Diameter:** 12 inch	**Angle from Vertical:** 0 **Datum:**
	Surface Conditions: Unpaved	

Depth	Sample Number	Sample Type (SS=Split Spoon, C=Cuttings, O=Other)	Blow Counts/6"	Inches Driven	Inches Recovered	PID (ppm)	Lithology	Description and Comments
0								Ground Surface
5								No samples.
10	1	SS	6-7-7	24	24			**SANDY CLAY, LT BROWN, DRY, FIRM (CL).** Light brown fine sands (60%) and silt (40%), (2.5y 7/4), sand is feldspar and quartz grains.
15								
20	2	SS	9-12-16	24	24			**SANDY CLAY, LT BROWN, DRY, FIRM (CL).** Less sand, more fines, (2.5y 7/4)
25								
30	3	SS	11-10-12	24	24			**SANDY CLAY, LT BROWN, DRY, FIRM (CL).** Less sand (20%), more fines (80%), (2.5y 7/4). Drilling becomes more difficult. Driller adds some water (about 15 gallons)
35								
40	4	SS	12-21-25	24	18			**SAND, BROWN, DRY, FIRM (SP).** Less fines (40%), more sands (60%) and coarse fine to medium sands (2.5y 6/4)
45								
50	5	SS	11-17-18	24	15			**GRAVELLY SAND, BROWN, DRY, FIRM (SW).** Large sands (50%), gravels (5%), silt (45%), dolomite gravels (2-3" broken/fractured); much rock flour (2.5yR 7/2) *Rig is "starting to lock up"
55								
60								

Drilling Contractor: Geomechanics Southwest Inc
Checked By:
Date Checked:

HSI GeoTrans, Inc.
4665 South Ash Avenue, Suite G-1
Tempe, Arizona 85282
Voice: 602-839-2800 Fax: 602-839-2828

Site Map	**Project No:** N386-301 **Client:** UIC **Site:** WOC	**Borehole No: MW-201S** **Start Date/Time:** 1/7/99 11:00 **End Date/Time:** 1/10/99 12:00 **Logged By:** Mr. Phil Odenkirk
	Drilling Method: CME-75 Hollow stem auger **Borehole Diameter:** 12 inch	**Angle from Vertical:** 0 **Datum:**
	Surface Conditions: Unpaved	

Depth	Sample Number	Sample Type (SS=Split Spoon, C=Cuttings, O=Other)	Blow Counts/6"	Inches Driven	Inches Recovered	PID (ppm)	Lithology	Description and Comments
	6	SS	24-32-35	16	15			**SAND, BROWN, DRY, HARD (SP).** Spoon drove only 16". More sand (65%) very fine to coarse (10%) (2.5yR 6/6) Coarse gravel in cuttings (place 15 gallons water to loosen)
65								
70	7	SS	55-85-0	16	15			**CLAYEY SILT, BROWN, DRY, HARD (ML).** At about 75' no gravel, all clay and silt (90%), some very fine sand (10%). Then some sand (10%), clay (60%), silt (30%). (7.5yR 5/4)
75								
80	8	SS	20-55-0	16	24			**SANDY SILT, BROWN, DRY, HARD (ML).** Same as above, except more fine- medium sand (15%), (7.5 yR 5/4)
85								
90	9	SS	19-50-40	24	24			**SILTY SAND, BROWN, DRY, HARD (ML).** Same As Above Change to 18" split spoon, drive counts represent 6 inches of penetration from 90 feet to TD
95								
100	10	SS	15-50-0	11.5	15			**SANDY SILT, BROWN, MOIST, FIRM (ML).** Water on tip, fine to medium sand (55%), some fines and silt (45%) (5yR 6/4)
105								
110	11	SS	16-24-40	18	18			**CLAYEY SILT, LT BROWN, MOIST, FIRM (ML)** Same as above, SWL@ 110-114' BGS, sample has 12" of silt at bottom 6", also has gravels (1 to 2 inches diameter) (2.5yR 6/2)
115								
120								

Drilling Contractor: Geomechanics Southwest Inc
Checked By:
Date Checked:

HSI GeoTrans, Inc.
4665 South Ash Avenue, Suite G-1
Tempe, Arizona 85282
Voice: 602-839-2800 Fax: 602-839-2828

Site Map	**Project No:** N386-301 **Client:** UIC **Site:** WOC	**Borehole No: MW-201S** **Start Date/Time:** 1/7/99 11:00 **End Date/Time:** 1/10/99 12:00 **Logged By:** Mr. Phil Odenkirk
	Drilling Method: CME-75 Hollow stem auger **Borehole Diameter:** 12 inch	**Angle from Vertical:** 0 **Datum:**
	Surface Conditions: Unpaved	

Depth	Sample Characteristics						Lithologic Characteristics	
	Sample Number	Sample Type (SS=Split Spoon, C=Cuttings, O=Other)	Blow Counts/6"	Inches Driven	Inches Recovered	PID (ppm)	Lithology	Description and Comments
	12	SS	50-50-0	8	18			**GRAVELLY SAND, BROWN, WET, FIRM (SW).** Medium gravelly sand interbedded with fine sand and sandy silt.
125								
130	13	SS	50-55-0	8	18			**GRAVELLY SAND, BROWN, WET, FIRM (SW).** Interbedded gravelly sand and finer sand.
135								
140	14	SS	15-25-50	18	18			Total Depth 100'
145								
150								
155								
160								
165								
170								
175								
180								

Drilling Contractor: Geomechanics Southwest Inc
Checked By:
Date Checked:

HSI GeoTrans, Inc.
4665 South Ash Avenue, Suite G-1
Tempe, Arizona 85282
Voice: 602-839-2800 Fax: 602-839-2828

☐ FILE N386-301 Monitoring well MW-201D

MONITOR WELL CONSTRUCTION SUMMARY

Well No. MW-2015

Boring No. X-Ref:

Survey Coords:

Elevation Ground Level:

Job Number: N386

Top of Casing:

Drilling Summary:	
Total Depth	143
Borehole Diameter	12"
Casing Stick-Up	Below Surface
Driller	Geo Mechanics Southwest, INC.
Rig	CME-75
Bit(s)	10" Hollow Stem auger
Drilling Fluid	N/A
Protective Casing	

Comments: It took two tries to set this well, since the 1st time the clean sands @ bottom "u-flowed" / heaved and pinned the PVC against the Augers. Next time a plug was used.

Construction Time Log:	Start		Finish	
Task	Date	Time	Date	Time
Drilling	1/7/99	0900	1/11/99	0900
Geophys. Logging				
Casing:	1/11/99	1030	1/11/99	1500
Filter Placement:	1/11/99	1045	1/11/99	1145
Cementing:	1/11/99	1200	1/11/99	1400
Development:	1.15.99	1000	1.15.99	1300

Well Development: 1.15.99 @ ~1000

Purged 1,200 gallons ended w/:

pH = 8.03, Conductivity = 1,786 µS,

T = 23.2 °C, 7.5 NTU's

ended @ ~1300

Site Name: West Osborn Complex

Location: West Central Phoenix, AZ

Well Design & Specifications

Basis: Geologic Log ✓ Geophysical Log _____

Casing String(s): C = Casing S = Screen

Depth (ft)	String (C1, S1, etc.)	Elevation (ft)
0 to 98	C1	
98 to 138	S1	
to		
to		
to		

Casing: C1 Schedule 40 PVC 4" 0 – 98' BGS

C2

Screen: S1 Schedule 40 PVC .010 inch slotted 98 – 138' BGS

S2

Filter Pack: 93' – 140' BGS

(12.5 Bags) 8x12 Colorado Silica Sand

Grout Seal: 0 – 82' BGS

Bentonite Seal: 82 – 93' BGS

Stabilization Test Data:

Time since pump on	pH	Spec. Cond.	Temp (F)
105	8.05	1.88 mS	24.1
110	8.08	1791 µS	22.8
120	8.08	1805 µS	23.2
125	8.08	1775 µS	23.5
130	8.03	1786 µS	23.2

Supervised By: Phil Odenkirk

Date: 1/11/99

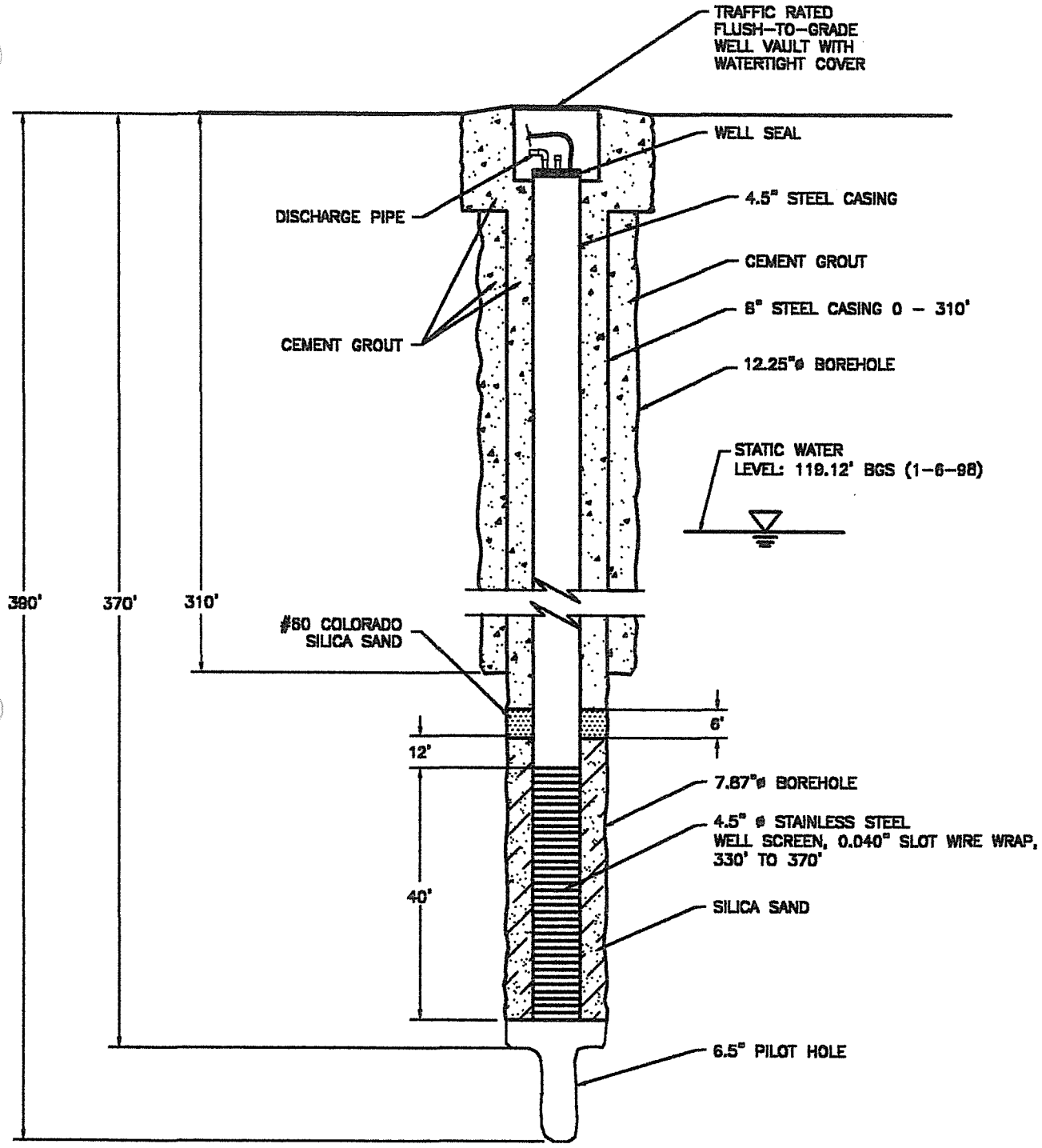

NOT TO SCALE

UNITED INDUSTRIAL CORPORATION	DATE: 7-27-98
INTERMEDIATE WELL MW-2M SECTION VIEW	DESIGNED:
	CHECKED:
	APPROVED:
	DRAWN: JDD
	PROJ.: N386-113
HSI GEOTRANS A Tetra Tech Company	

../RI-REPORT/WELL-002M.DWG

808708313
MW-2M

SOIL BOREHOLE LOG

SITE NAME AND LOCATION	DRILLING METHOD:	BORING NO.
808708313/105 UIC Phoenix, AZ	mud rotary 6.5" open faced tricone	MW-2M
		SHEET 1 OF 6
	SAMPLING METHOD: grab every 25' or drive at lithology changes	DRILLING START / FINISH
	WATER LEVEL / TIME / DATE / CASING DEPTH	START TIME 0800 DATE 10/8/96; FINISH TIME 0900 DATE 10/14/96
DATUM: APPROXIMATE ELEVATION:		

DRILLING RIG:

ANGLE: HAMMER WEIGHT:

SAMPLE HAMMER TORQUE: FT.-LBS

SURFACE CONDITIONS:

DRILLING CONTRACTOR Stewart Brothers Drilling Company

DEPTH IN FEET	Soil Graph	Inches Driven / Inches Recovered	Sample No / Sample Depth	BLOWS	TIME	SAMPLE NUMBER AND DESCRIPTION OF MATERIAL
0						5': SILTY SAND (SM), SANDY SILT (ML): brown, dry, auger sample
5						
10						10': SILTY SAND (SM): brown, fine to coarse-grained sand, 80% sand
15						
20						20': SILTY SAND (SM): brown, fine to coarse-grained sand, 80% sand
25						25': SILTY SAND (SM): trace clay and gravel, brown, 1/4"-1/3" gravel
30	SM					
35						
40						40': SILTY SAND (SM): brown, fine to coarse-grained gravel; 60-70% gravel, 40-30% silt
45						
50						50': SILTY SAND (SM): trace gravels, brown (mix), fine to very coarse-grained sand, 1/2" gravel, angular, sub-rounded
55						
60						60':SILTY SAND (SM): trace clay, brown (reddish brown), fine to coarse-grained gravel, 1/2" angular gravel; 10-15% clay
65						
70	SM-GM					70': SILTY SANDY GRAVEL, SILTY GRAVELLY SAND (GW-SW): brown (mix), 1/4"-3/4" gravel, rounded and angular

LOGGED BY David Broermann

DATE 10/8/96

CHECKED BY

SOIL BOREHOLE LOG

SITE NAME AND LOCATION 808708313/105 UIC Phoenix, AZ	DRILLING METHOD: mud rotary 6.5" open faced tricone	BORING NO. MW-2M	
	SAMPLING METHOD: grab every 25' or drive at lithology changes	SHEET 2 OF 6	
		DRILLING	
		START	FINISH
	WATER LEVEL / TIME / DATE / CASING DEPTH	TIME 0800 / DATE 10/8/96	TIME 0900 / DATE 10/14/96
DATUM: APPROXIMATE ELEVATION:			
DRILLING RIG:	SURFACE CONDITIONS:		
ANGLE: HAMMER WEIGHT:			
SAMPLE HAMMER TORQUE: FT.-LBS			

DEPTH IN FEET	Soil Graph	Inches Driven / Inches Recovered	Sample No / Sample Depth	BLOWS	TIME	SAMPLE NUMBER AND DESCRIPTION OF MATERIAL
75	GM-SM					
80						80': SILTY SANDY GRAVEL. SILTY GRAVELLY SAND (GW-SW): brown (mix), 1/4"-3/4" gravel, rounded and angular
85						
90	ML					90': SANDY SILT (ML): some gravel, brown, 1/4"-3/4" gravel rounded to angular: 40% fine-grained sand. 45% silt, 15% gravel
95						
100	SM					100': SILTY SAND (SM): brown, fine to coarse-grained sand; 80% sand, 20% silt
105						
110	GM-SM					110': SILTY SANDY GRAVEL, SILTY GRAVELLY SAND (GM-SM): brown, fine to coarse-grained sand, gravels 1/4"-3/4", angular to rounded
115						
120	SM					120': SILTY SAND (SM): brown, fine to medium-grained sand, some coarse
125						
130						130': SILTY SAND (SM): brown, fien to coarse-grained sand
135						
140						140': SILTY SAND (SM): brown, fine to medium-grained sand, trace to some clay
145						

DRILLING CONTRACTOR Stewart Brothers Drilling Company

LOGGED BY David Broermann

CHECKED BY

DATE 10/8/96

SOIL BOREHOLE LOG

SITE NAME AND LOCATION	DRILLING METHOD:	BORING NO.
808708313/105 UIC Phoenix, AZ	mud rotary 6.5" open faced tricone	MW-2M
		SHEET 3 OF 6
	SAMPLING METHOD: grab every 25' or drive at lithology changes	DRILLING START / FINISH
	WATER LEVEL / TIME / DATE / CASING DEPTH	TIME 0800 / TIME 0900 / DATE 10/8/96 / DATE 10/14/96
DATUM: APPROXIMATE ELEVATION:		

DRILLING RIG:

ANGLE: HAMMER WEIGHT:

SAMPLE HAMMER TORQUE: FT.-LBS

SURFACE CONDITIONS:

DRILLING CONTRACTOR Stewart Brothers Drilling Company

DEPTH IN FEET	Soil Graph	Inches Driven / Inches Recovered	Sample No / Sample Depth	BLOWS	TIME	SAMPLE NUMBER AND DESCRIPTION OF MATERIAL
150	SM					150': SILTY CLAYEY SAND (SM): brown, silt and clay with fine to medium-grained sand
155						
160						160': SILTY SAND, SANDY SILT (SM-ML): brown, fine to coarse-grained sand with silt and some clayl 50-70% sand
165						
170						170': SILTY SAND, SANDY SILT (SM-ML): brown, very fine to medium-grained sand with silt; 50-70% sand
175						
180						180': SILTY SAND, SANDY SILT (SM-ML): brown, very fine to medium-grained sand with silt; 50-70% sand
185	SM-ML					
190						190': SILTY SAND, SANDY SILT (SM-ML): brown, very fine to medium-grained sand with silt; 50-70% sand
195						
200						200': SILTY SAND, SANDY SILT (SM-ML): brown, very fine to medium-grained sand with silt; 50-70% sand, trace caliche
205						
210						210': SILTY SAND, SANDY SILT (SM-ML): brown, very fine to medium-grained sand; trace clay
215						
220						220': SILTY SAND, SANDY SILT (SM-ML): brown, very fine to medium-grained sand: trace clay

LOGGED BY David Broermann CHECKED BY

DATE 10/8/96

SOIL BOREHOLE LOG

SITE NAME AND LOCATION	DRILLING METHOD:	BORING NO.
808708313/105 UIC Phoenix, AZ	mud rotary 6.5" open faced tricone	MW-2M
		SHEET 4 OF 6
	SAMPLING METHOD: grab every 25' or drive at lithology changes	DRILLING START / FINISH
	WATER LEVEL / TIME / DATE / CASING DEPTH	TIME 0800 / TIME 0900
DATUM: APPROXIMATE ELEVATION:		DATE 10/8/96 / DATE 10/14/96

DRILLING CONTRACTOR Stewart Brothers Drilling Company

DRILLING RIG:

SURFACE CONDITIONS:

ANGLE: HAMMER WEIGHT:

SAMPLE HAMMER TORQUE: FT.-LBS

DEPTH IN FEET	Soil Graph	Inches Driven / Inches Recovered	Sample No / Sample Depth	BLOWS	TIME	SAMPLE NUMBER AND DESCRIPTION OF MATERIAL
225	SM-ML					
230						230': SANDY SILT (ML): brown, very fine to medium-grained sand
235						
240						240': SANDY SILT (ML): brown, trace clay; 40-50% sand
245	ML					
250						250': SANDY SILT (ML): some clay, brown; 40% sand
255						
260						260': SANDY CLAYEY SILT, SANDY SILTY CLAY (ML-CL): brown, 30-20% sand, very fine to medium-grained sand
265	ML-CL					
270						270': SANDY SILT (ML): some clay, brown, very fine-grained sand; 30% sand
275						
280	ML					280': SANDY SILT (ML): brown, very fine to medium-grained sand; 30-40% sand
285						
290						290': SANDY SILT (ML): brown, very fine to medium-grinaed sand; 40-45% sand
295						

LOGGED BY David Broermann

CHECKED BY

DATE 10/8/96

SOIL BOREHOLE LOG

SITE NAME AND LOCATION	DRILLING METHOD:	BORING NO.
808708313/105 UIC Phoenix, AZ	mud rotary 6.5" open faced tricone	MW-2M
		SHEET 5 OF 6
	SAMPLING METHOD: grab every 25' or drive at lithology changes	DRILLING START / FINISH
	WATER LEVEL / TIME / DATE / CASING DEPTH	START TIME 0800 / FINISH TIME 0900
		START DATE 10/8/96 / FINISH DATE 10/14/96
DATUM: APPROXIMATE ELEVATION:		

DRILLING RIG:

ANGLE: HAMMER WEIGHT:

SAMPLE HAMMER TORQUE: FT.-LBS

SURFACE CONDITIONS:

DEPTH IN FEET	Soil Graph	Inches Driven / Inches Recovered	Sample No / Sample Depth	BLOWS	TIME	SAMPLE NUMBER AND DESCRIPTION OF MATERIAL
300						300': SANDY SILT, SILTY SAND (ML-SM): brown, very fine to medium-grained sand
305						
310						310': SILTY SAND (SM): trace gravel, brown, very fine to medium-grained sand
315						
320						320': SILTY SAND (SM): brown, trace gravel, very fine to medium-grained sand
325	SM					
330						330': SILTY SAND (SM): brown, trace gravel, very fine to medium-grained sand
335						
340						340': SILTY SAND (SM): brown, trace gravel, very fine to medium-grained sand
345						
350						350': SILTY SAND (SM): some gravel, brown, very fine to coarse-grained sand, angular to subrounded
355						
360						360': SILTY GRAVELLY SAND, SILTY SANDY GRAVEL (SM-GM): angular, subrounded
365	GM-SM					
370	GC-SC					370': CLAYEY GRAVEL and SAND (GC-SC): brown, gravel

DRILLING CONTRACTOR Stewart Brothers Drilling Company

LOGGED BY David Broermann

CHECKED BY

DATE 10/8/96

SOIL BOREHOLE LOG

SITE NAME AND LOCATION	DRILLING METHOD:	BORING NO.
808708313/105 UIC Phoenix, AZ	mud rotary 6.5" open faced tricone	MW-2M
		SHEET 6 OF 6
	SAMPLING METHOD: grab every 25' or drive at lithology changes	DRILLING START / FINISH
	WATER LEVEL / TIME / DATE / CASING DEPTH	TIME 0800 / TIME 0900
		DATE 10/8/96 / DATE 10/14/96
DATUM: APPROXIMATE ELEVATION:		

DRILLING RIG:

ANGLE: HAMMER WEIGHT:

SAMPLE HAMMER TORQUE: FT.-LBS

SURFACE CONDITIONS:

DEPTH IN FEET	Soil Graph	Inches Driven / Inches Recovered	Sample No / Sample Depth	BLOWS	TIME	SAMPLE NUMBER AND DESCRIPTION OF MATERIAL
375	GC-SC					
380	TD					380': SANDY CLAY, CLAY (CL): brown, very fine-grained sand: 10-20% increased percent of clay with depth
385						
390						
395						
400						
405						
410						
415						
420						
425						
430						
435						
440						
445						

DRILLING CONTRACTOR Stewart Brothers Drilling Company

LOGGED BY David Broermann

CHECKED BY

DATE 10/8/96

ELECTRIC LOGS FOR MW-2M

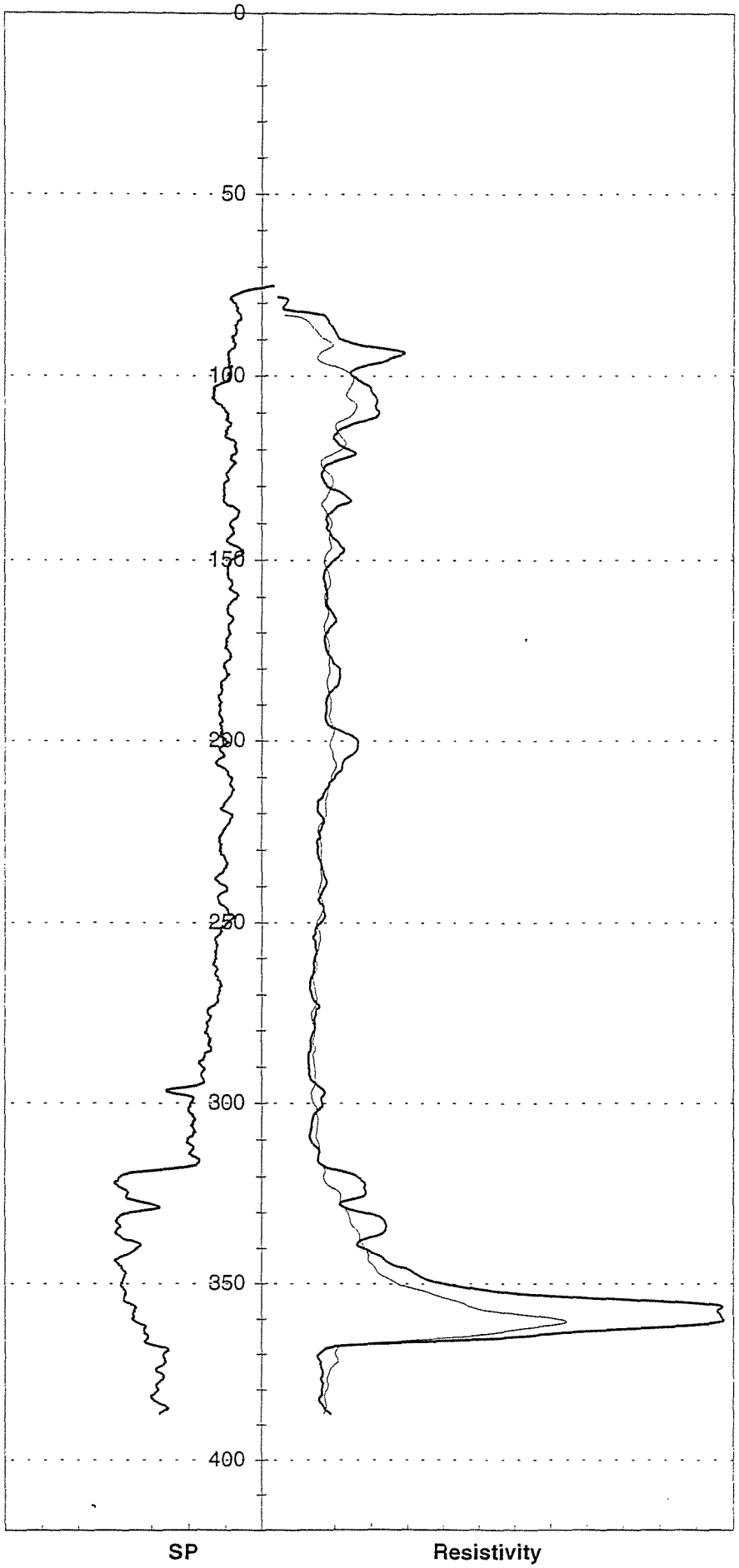

HSI GEOTRANS

NATURAL GAMMA AND NEUTRON LOG FOR MW-2M

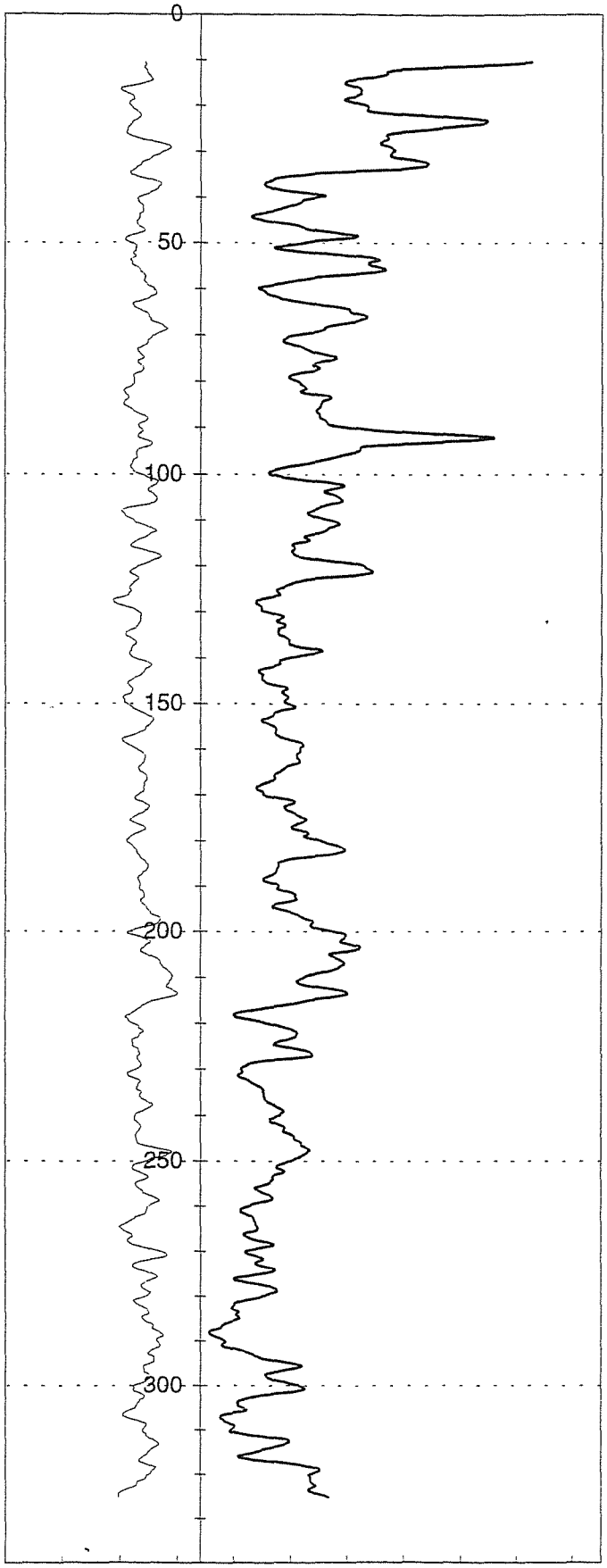

Natural Gamma Neutron

HSI GEOTRANS

17. **If construction plans have been coordinated with Arizona Department of Environmental Quality, who is the agency contact?** Ms. AnaVargus

If construction plans have been coordinated with Arizona Department of Water Resources, who is the agency contact? None

18. **WELL CONSTRUCTION PLAN:**

a) Drilling method (mud rotary, hollow-stem auger, etc.) Mud Rotary

b) Borehole diameters: 12 inches from 0 feet to 250 feet.
7 7/8 inches from 250 feet to 800 feet.

c) Casing materials (PVC, steel, hollow-stem auger, etc.)

material Schedule 40 low carbon steel diameter 8 inches from 0 feet to 250 feet.
material Schedule 40 low carbon steel diameter 4 inches from 0 feet to 760 feet.

d) Method of sealing at reductions grout seal

e) Annular seal materials (cement, grout, etc.); method of placement (tremied, circulated):

material cement grout method tremied from 0 feet to 748 feet.
material bentonite method tremied from 748 feet to 753 feet.

f) Filter packs (state material):
material silica sand from 753 feet to 800 feet.
material _____ from _____ feet to _____ feet.

g) Perforation or screen specification:

type 4-Inch, type 304 stainless steel from 760 feet to 800 feet.
type _____ from _____ feet to _____ feet.

h) Method of well development (bail, air lift, surge) Air-lift, jet, surge and pump

i) Will surface or conductor casing extend above grade? Yes _____ No XXXX

19. **Include detailed construction diagram showing expected water depth in feet below land surface, and details of vault, if specified.**

GENERAL INSTRUCTION

1. **Please submit two original notices, with original signatures, and check or money order (no cash) in the amount of $ 10.00, to P.O. Box 458, Phoenix, Arizona 85001-0458 or hand deliver to 500 North Third Street, Phoenix, Arizona 85004-3903.**

CONDITIONS

1. **If an individual other than the land owner or lessee, signs this notice, an original letter of authorization from the land owner/lessee, stating that the individual has permission to sign this specific Notice on their behalf, shall accompany the Notice of Intention to Drill a Monitor/Piezometer Well form.**

2. **Construction and abandonment standards for all wells shall be in accordance with A.A.C. R12-15-811 and R12-15-816.**

3. **Drilling of the well shall be completed within one year after the date of Notice.**

4. **A Well Driller Report is required within thirty days of completion of drilling. A Completion Report is required to be filed with the Department within thirty days after installation of pump equipment for monitor wells.**

5. **Pump equipment may not be installed on a well drilled for piezometer purposes. If a monitor will is pumped, pumping is limited to the maximum amount required for monitor purposes, but in no case may exceed 35 gallons per minute and an annual volume of 10 acre feet total.**

6. **A.A.C. Rule R12-15-811.H.2, requires that: "A monitor well shall be identified as such on the vault cover or at the top of the steel casing. Identification information will include well registration number."**

Special construction standards, required pursuant to A.A.C. Rule R12-15-821: _____

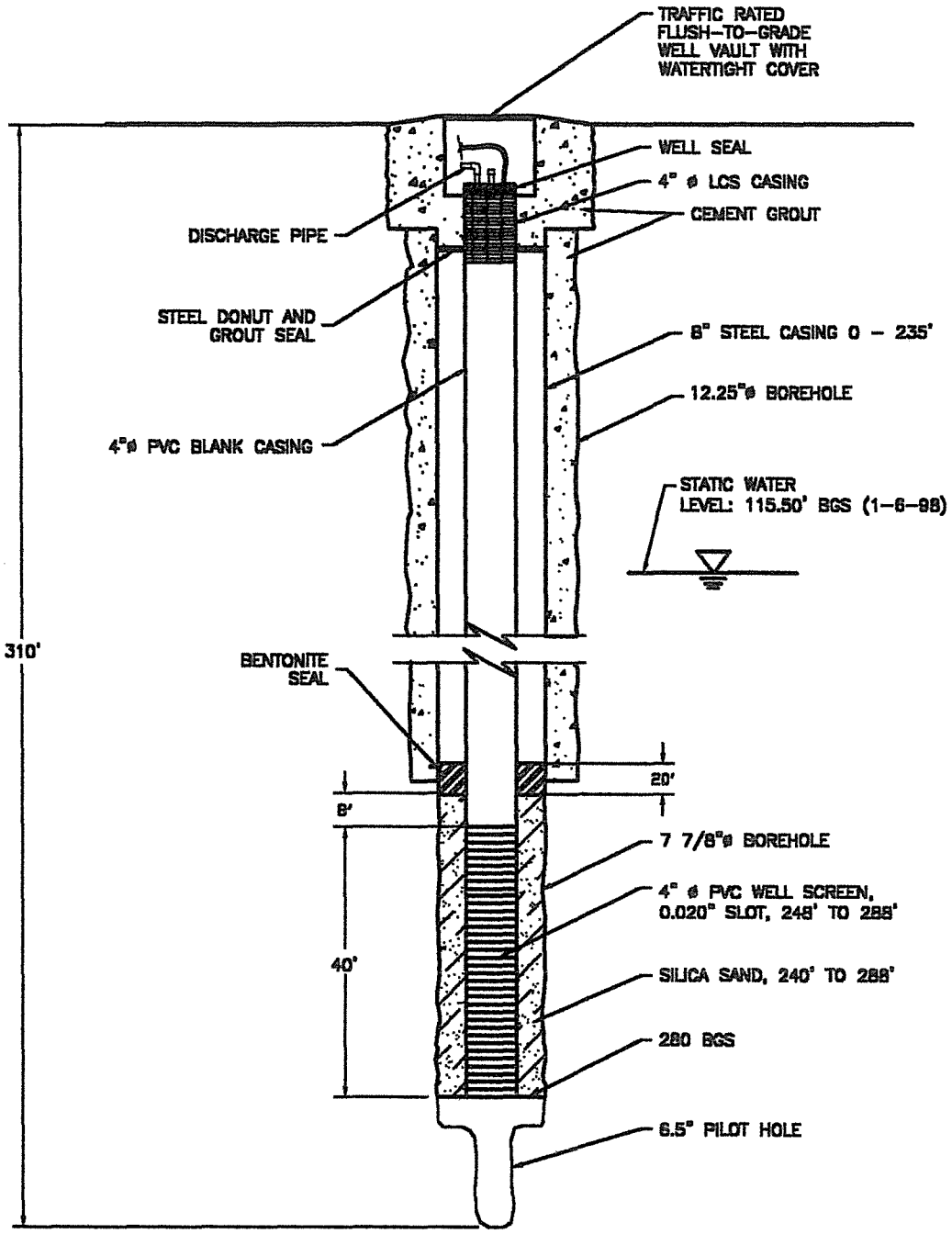

NOT TO SCALE

UNITED INDUSTRIAL CORPORATION	DATE: 7-27-98
INTERMEDIATE WELL MW-13M SECTION VIEW	DESIGNED:
	CHECKED:
	APPROVED:
	DRAWN: JDD
	PROJ.: N386-113
HSI GEOTRANS A Tetra Tech Company	

_/fs-REPORT/WELL-13M.DWG

HSI GEOTRANS

Site Map

Project No: N386-119

Client: UIC

Site: WOC

Borehole No: WCP 13m

Start Date/Time: 12/12/97 11:00

End Date/Time: 12/15/97 15:15

Logged By: David Broermann

Drilling Method: Mud Rotary

Borehole Diameter: 6 1/2 inches

Angle from Vertical:

Datum:

Surface Conditions: Gravel

Depth	Sample Number	Sample Type (SS=Split Spoon, C=Cuttings, O=Other)	Blow Counts/6"	Inches Driven	Inches Recovered	PID (ppm)	Lithology	Description and Comments
								Ground Surface
0–5	1	C						**SILTY SAND SANDY SILT (SM-ML)** Brown, fine to coarse sand, silt, trace coarse sand, trace clay
5–10								
10–15	2	C						**SILTY SAND (SM)** Brown, fine to coarse sand, silt, trace gravel, subangular coarse sand and gravel
15–20								
20–25	3	C						**SANDY SILT (ML)** Brown, silt, fine sand, trace clay
25–30								
30–35	4	C						**SANDY SILT (ML)** Light brown, silt, fine to coarse sand, trace clay and caliche
35–40								
40–45	5	C						**SILTY SAND (SM)** Light bown, fine to coarse sand, silt, angular to subangular coarse sand, trace clay and caliche
45–50								

Drilling Contractor: Stewart Brothers

Checked By:

Date Checked:

HSI GeoTrans, Inc.
4665 South Ash Avenue, Suite G-1
Tempe, Arizona 85282
Voice: 602-839-2800 Fax: 602-839-2828

HSI GEOTRANS

Site Map

Project No: N386-119

Client: UIC

Site: WOC

Borehole No: WCP 13m

Start Date/Time: 12/12/97 11:00

End Date/Time: 12/15/97 15:15

Logged By: David Broermann

Drilling Method: Mud Rotary

Borehole Diameter: 6 1/2 inches

Angle from Vertical:

Datum:

Surface Conditions: Gravel

Depth	Sample Number	Sample Type (SS=Split Spoon, C=Cuttings, O=Other)	Blow Counts/6"	Inches Driven	Inches Recovered	PID (ppm)	Lithology	Description and Comments
55–60	6	C						**SILTY SAND-SANDY SILT(SM-ML)** Light brown, fine to coarse sand, silt, trace clay and caliche
65–70	7	C						**SILTY SAND (SM)** Light brown, fine to coarse sand, silt, angular to rounded sand, trace coarse sand 1/4", trace caliche
75–80	8	C						**SILTY SAND SANDY SILT (SM-ML)** Light brown, fine to medium sand, silt, rounded to angular, trace to some caliche
85–90	9	C						**SANDY SILT (ML)** Light brown, silt, fine to medium sand, trace caliche, trace to some gravel 1/4"-1/3"
95–100	10	C						**SILTY SAND SANDY SILT (SM-ML)** Brown, fine to medium sand, silt, trace caliche, trace coarse sand

Drilling Contractor: Stewart Brothers

Checked By:

Date Checked:

HSI GeoTrans, Inc.
4665 South Ash Avenue, Suite G-1
Tempe, Arizona 85282
Voice: 602-839-2800 Fax: 602-839-2828

HSI GEOTRANS

Site Map

Project No: N386-119

Client: UIC

Site: WOC

Borehole No: WCP 13m

Start Date/Time: 12/12/97 11:00

End Date/Time: 12/15/97 15:15

Logged By: David Broermann

Drilling Method: Mud Rotary

Borehole Diameter: 6 1/2 inches

Angle from Vertical:

Datum:

Surface Conditions: Gravel

Depth	Sample Number	Sample Type (SS=Split Spoon, C=Cuttings, O=Other)	Blow Counts/6"	Inches Driven	Inches Recovered	PID (ppm)	Lithology	Description and Comments
106	11	C						**SILTY SAND (SM)** Brown, fine to coarse sand, silt, trace gravel, 1/4"-1" gravel
111–116	12	C						**SILTY SAND some gravel (SM)** Brown, fine to coarse sand, silt, angular to rounded coarse sand and gravel
121–126	13	C						**SILTY SAND (SM)** Light brown, fine to coarse sand, silt, trace clay
131–136	14	C						**SILTY SAND (SM)** Brown, fine to medium sand, silt, trace clay, trace to some coarse sand
141–146	15	C						**SILTY SAND some gravel (SM)** Brown, very fine to medium sand, silt, trace coarse sand, rounded to subangular coarse sand and gravel
151								

Drilling Contractor: Stewart Brothers

Checked By:

Date Checked:

HSI GeoTrans, Inc.
4665 South Ash Avenue, Suite G-1
Tempe, Arizona 85282
Voice: 602-839-2800 Fax: 602-839-2828

HSI GEOTRANS

Site Map

Project No: N386-119

Client: UIC

Site: WOC

Borehole No: WCP 13m

Start Date/Time: 12/12/97 11:00

End Date/Time: 12/15/97 15:15

Logged By: David Broermann

Drilling Method: Mud Rotary

Borehole Diameter: 6 1/2 inches

Angle from Vertical:

Datum:

Surface Conditions: Gravel

Depth	Sample Number	Sample Type (SS=Split Spoon, C=Cuttings, O=Other)	Blow Counts/6"	Inches Driven	Inches Recovered	PID (ppm)	Lithology	Description and Comments
156–161	16	C						**SILTY SAND some gravel (SM)** Light brown, very fine to coarse sand, silt, some gravel
166–171	17	C						**SILTY SAND some gravel (SM)** Brown, fine to coarse sand, silt, some gravel1/4"-1/2", rounded to angular
176–181	18	C						**SANDY SILT trace clay (ML)** Brown to light brown, silt, fine sand, trace clay
186–191	19	C						**SILTY SAND-SANDY SILT (SM-ML)** Brown, fine to coarse sand, silt, rounded to subangular sand
196–201	21	C						**SANDY SILT (ML)** Light brown, silt, fine to medium sand

Drilling Contractor: Stewart Brothers

Checked By:

Date Checked:

Sheet: 4 of 7

HSI GeoTrans, Inc.
4665 South Ash Avenue, Suite G-1
Tempe, Arizona 85282
Voice: 602-839-2800 Fax: 602-839-2828

HSI GEOTRANS

Site Map

Project No: N386-119

Client: UIC

Site: WOC

Borehole No: WCP 13m

Start Date/Time: 12/12/97 11:00

End Date/Time: 12/15/97 15:15

Logged By: David Broermann

Drilling Method: Mud Rotary

Borehole Diameter: 6 1/2 inches

Angle from Vertical:

Datum:

Surface Conditions: Gravel

Depth	Sample Number	Sample Type (SS=Split Spoon, C=Cuttings, O=Other)	Blow Counts/6"	Inches Driven	Inches Recovered	PID (ppm)	Lithology	Description and Comments
207	22	C						**SANDY SILT (ML)** Light brown, silt, fine sand,trace medium and coarse sand, trace clay
212 – 217	23	C						**SAND SILT (ML)** Brown to light brown, silt, fine sand, trace medium and coarse sand, trace clay
222 – 227	24	C						**SANDY SILT SILTY SAND (ML-SM)** Brown to light brown, silt, fine to medium sand, trace coarse sand, trace clay
232 – 237	25	C						**SILTY SAND (SM)** Brown to light brown, fine to medium sand, silt, trace clay
242 – 247	26	C						**SANDY SILT SILTY SAND (ML-SM)** Brown to light brown, fine to medium sand, silt, trace clay
252								

Drilling Contractor: Stewart Brothers

Checked By:

Date Checked:

Sheet: 5 of 7

HSI GeoTrans, Inc.
4665 South Ash Avenue, Suite G-1
Tempe, Arizona 85282
Voice: 602-839-2800 Fax: 602-839-2828

HSI GEOTRANS

Site Map

Project No: N386-119

Client: UIC

Site: WOC

Borehole No: WCP 13m

Start Date/Time: 12/12/97 11:00

End Date/Time: 12/15/97 15:15

Logged By: David Broermann

Drilling Method: Mud Rotary

Borehole Diameter: 6 1/2 inches

Angle from Vertical:

Datum:

Surface Conditions: Gravel

Depth	Sample Number	Sample Type (SS=Split Spoon, C=Cuttings, O=Other)	Blow Counts/6"	Inches Driven	Inches Recovered	PID (ppm)	Lithology	Description and Comments
257–262	27	C						**SILTY SAND (SM)** Light brown, fine to medium sand, silt
262–267	28	C						**SILTY SAND (SM)** Light brown, fine to medium sand, silt
267–272	29	C						**SILTY SAND (SM)** Light brown, fine to medium sand, silt
272–277	30	C						**SILTY SAND (SM)** Light brown, fine to medium sand, silt, trace clay, trace coarse sand
277–282	31	C						**SILTY SAND (SM)** Brown, fine to medium sand, silt, trace clay
282–287								
287–292								
292–297								
297–302								
302								

Drilling Contractor: Stewart Brothers

Checked By:

Date Checked:

Sheet: 6 of 7

HSI GeoTrans, Inc.
4665 South Ash Avenue, Suite G-1
Tempe, Arizona 85282
Voice: 602-839-2800 Fax: 602-839-2828

HSI GEOTRANS

Site Map

Project No: N386-119

Client: UIC

Site: WOC

Borehole No: WCP 13m

Start Date/Time: 12/12/97 11:00

End Date/Time: 12/15/97 15:15

Logged By: David Broermann

Drilling Method: Mud Rotary

Borehole Diameter: 6 1/2 inches

Angle from Vertical:

Datum:

Surface Conditions: Gravel

Depth	Sample Number	Sample Type (SS=Split Spoon, C=Cuttings, O=Other)	Blow Counts/6"	Inches Driven	Inches Recovered	PID (ppm)	Lithology	Description and Comments
308	32	C						**SANDY SILT (ML)** Brown, fine sand, silt, trace clay, trace gravel
313	33	C						**SANDY SILT (ML)** Brown, silt, fine to medium sand, trace clay
318								
323	34	C						**SANDY SILT (ML)** Brown, silt, fine to medium sand, trace clay
328								
333	35	C						**SILTY SAND (ML)** Brown, fine to medium sand, silt, trace clay
338								
343	36	C						**SANDY SILT (ML)** Brown, silt, fine to medium sand, trace clay
348								
353								Total Depth 350'

Drilling Contractor: Stewart Brothers

Checked By:

Date Checked:

Sheet: 7 of 7

HSI GeoTrans, Inc.
4665 South Ash Avenue, Suite G-1
Tempe, Arizona 85282
Voice: 602-839-2800 Fax: 602-839-2828

MONITOR WELL CONSTRUCTION SUMMARY

Well No. WCP-13m

Boring No. X-Ref:

Map Coords: 5231 N, 4984 E

Elevation Ground Level:

Job Number: N386-119

Top of Casing: 1108.42

Drilling Summary:	
Total Depth	288 feet
Borehole Diameter	7 7/8 inches
Casing Stick-Up	0
Driller	Stewart Brothers Drilling Co.
Rig	Gardner Denver 1500
Bit(s)	0-350 feet: 6 1/2" tricone 0-235 feet:12 1/4" tricone 0-290 feet: 7 7/8" tricone
Drilling Fluid	Bentonite mud
Protective Casing	None

Comments: 6 ½ inch pilot hole was drilled from 0 to 310 feet. The hole was logged and then reamed using a 12 1/4 inch bit to 235 feet. Eight inch steel casing was then set to 235 feet and grouted in place. A 7 7/8 inch bit was then used to drill to a depth of 290 feet.

Construction Time Log: **Start** 12/12/97 **Finish** 12/17/97				
	Date	Time	Date	Time
Drilling (6 1/2")	12/12/97	11:00	12/15/97	15:15
(12 1/4")	12/16/97	7:15	12/16/97	17:45
(7 7/8")	12/18/97	7:15	12/18/97	10:30
Geophys. Logging	12/15/97	15:45	12/15/97	17:30
Casing: 8"LCS	12/17/97	9:45	12/17/97	14:00
Casing: 4"PVC	12/18/97	12:30	12/18/97	15:00
Sand Pack:	12/18/97	15:00	12/18/97	16:30
Cementing:	12/17/97	14:00	12/17/97	15:15
Development:	12/19/97	7:00	1/29/98	8:55

Well Design & Specifications

Basis: Geologic Log x Geophysical Log x

Casing String(s): C = Casing S = Screen

Depth (ft)	String (C1, S1, etc.)	Elevation (ft)
0 to 235	C1 - 8" LCS	
0 to 8	C2 - 4" LCS	
8 to 248	C3 - 4" PVC	
248 to 288	S1 - 4" PVC	
to		

Casing: C1	8" low carbon steel (8⅝" OD)
C2	4" low carbon steel
C3	4" Schedule 40 PVC blank casing
Screen: S1	4" Schedule 40 PVC factory 0.020"
S2	
Filter Pack:	240'-288': 8-12 Colorado silica sand.
Grout Seal:	0-235': neat cement with 3.5% bentonite
Seal:	220'-240' Bentonite pellets

Well Development:: Well was bailed by the driller for approximately five hours. The well was also developed using a 4" submersible pump. The pump was raised and lowered to surge and purge at the same time.

On April 10, 1998, Bloomquist Pump set a ½ hP Goulds submersible pump at a depth of 243 feet. An Aardvark packer was set at a depth of 238 feet.

Stabilization Test Data:

Time	pH	Spec. Cond. µs/m	Temp (C)
8:12	7.98	1475	21.9
8:36	7.99	1457	22.2
8:42	7.83	1451	22.6
8:55	7.9	1487	21.9

Site Name: West Osborn Complex

Location: 36th Avenue and Whitton

Supervised By: David Broermann

Date: 3/26/98

STATE OF ARIZONA
DEPARTMENT OF WATER RESOURCES
GROUNDWATER MANAGEMENT SUPPORT SECTION
500 NORTH THIRD STREET, PHOENIX, ARIZONA 85004-3903
PHONE (602) 417-2470 FAX (602) 417-2422

RECEIVED OCT - 9 1997 GROUNDWATER MGT

NOTICE OF INTENTION TO DRILL MONITOR/PIEZOMETER WELL

Section §45-596. Arizona Revised Statues provide: Prior to drilling a monitor or piezometer well, a Notice of Intention to Drill shall be filed with the Department.

1 Well/Land Location: (WCP-13M)
2N 1E 27
Township Range Section

NW ¼ SE ¼ NE ¼
10 Acre 40 Acre 160 Acre

2. Position location of the well on the land:

Latitude 33 o 29 ' 444 "

Longitude 112 o 08 ' 285 "

3. County: _____

4. Owner of the well:

United Industrial Corporation
Name
1615 L Street, NW, Suite 700
Address
Washington, DC 20036
City Sate Zip
Phone Number 202-682-7210

5. Lessee of the land of wellsite:

Name

Address

City Sate Zip
Phone Number

6. Owner of Land and Wellsite:

City of Phoenix
Name
200 West Washington Street
Address
Phoenix, Arizona 85003-1611
City State Zip
Phone Number

7. Consulting firm:

HSI GeoTrans, Inc.
Name
David Broermann
Contact Person
602-839-2800
Phone Number

8. Purpose of well drilled pursuant to this notice:
Monitor X
Piezometer _____

9. If for deepening or modifying, list well registration number:
55-_____

DO NOT WRITE IN THIS SPACE
OFFICE RECORD
File No. AQ-1127 ADB
Filed 10-9-97 By [illegible]
Input NOV 1 By 1997
DUPLICATE
Mailed 10-21-97 By ADB
Registration 55- 564983
AMA/INA [illegible]
W/S 07 S/B 04

10. Construction will start:
October 1, 1997
Month Day Year

11. Period well will remain in use:
20 ~~Month~~/Years

12. For monitoring wells, is pump equipment to be installed?
Yes _____ No X
(a) If yes, design pump capacity:

(b) What use will be made of the water:

13. Drilling Firm:

Stewart Brothers Drilling Co.
Name

P.O. Box 2067
Address

Milan, NM 87021 -2067
City State Zip

1-505-287-2986
Telephone Number

314
DWR License Number

A-4
ROC License Category

15. Proposed method of abandonment of well after project is completed: In accordance with A.A.C. R12-15-811, pursuant to R12-15-816

16. Is this well to monitor existing contamination? _____ Potential contamination XX .Please explain: Monitor wells will monitor potential-existing contamination previously identified in other monitor wells.

I state that this Notice is filed in compliance with Rule A.A.C. R12-15-809 and R12-15-816(F), and is complete and correct to the best of my knowledge and belief and that I understand the limitations and conditions set forth on the reverse side of this form.

Thomas E. Callow, Assistant Director, Street Transportation — Thomas E. Callow — 10-1-97
Typed or Printed Name — Signature [X] Land Owner [ ] Lessee of Wellsite — Date

If construction plans have been coordinated with Arizona Department of Environmental Quailty, who is the agency contact? ____ Ms. Ana Vargus

If construction plans have been coordinated with Arizona Department of Water Resources, who is the agency contact? None

WELL CONSTRUCTION PLAN:

a) Drilling method (mud rotary, hollow-stem auger, etc.) Mud Rotary

b) Borehole diameters: 12 inches from 0 feet to 250 feet.
7 7/8 inches from 250 feet to 300 feet.

c) Casing materials (PVC, steel, hollow-stem auger, etc.)

material Schedule 40 low carbon steel diameter 8 inches from 0 feet to 250 feet.
material Schedule 40 PVC diameter 4 inches from 0 feet to 260 feet.

d) Method of sealing at reductions grout seal

e) Annular seal materials (cement, grout, etc.); method of placement (tremied, circulated):

material cement grout method tremied from 0 feet to 250 feet.
material bentonite method tremied from 250 feet to 253 feet.

f) Filter packs (state material):
material silica sand from 253 feet to 300 feet.
material ____ from ____ feet to ____ feet.

g) Perforation or screen specification:

type 4-Inch, schedule 40 PVC 0.010" slot from 260 feet to 300 feet.
type ____ from ____ feet to ____ feet.

h) Method of well development (bail, air lift, surge) Air-lift, jet, surge and pump

i) Will surface or conductor casing extend above grade? Yes ____ No XXX

9. Include detailed construction diagram showing expected water depth in feet below land surface, and details of vault, if specified.

GENERAL INSTRUCTION

Please submit two original notices, with original signatures, and check or money order (no cash) in the amount of $ 10.00, to P.O. Box 458, Phoenix, Arizona 85001-0458 or hand deliver to 500 North Third Street, Phoenix, Arizona 85004-3903.

CONDITIONS

If an individual other than the land owner or lessee, signs this notice, an original letter of authorization from the land owner/lessee, stating that the individual has permission to sign this specific Notice on their behalf, shall accompany the Notice of Intention to Drill a Monitor/Piezometer Well form.

Construction and abandonment standards for all wells shall be in accordance with A.A.C. R12-15-811 and R12-15-816.

Drilling of the well shall be completed within one year after the date of Notice.

A Well Driller Report is required within thirty days of completion of drilling. A Completion Report is required to be filed with the Department within thirty days after installation of pump equipment for monitor wells.

Pump equipment may not be installed on a well drilled for piezometer purposes. If a monitor will is pumped, pumping is limited to the maximum amount required for monitor purposes, but in no case may exceed 35 gallons per minute and an annual volume of 10 acre feet total.

A.A.C. Rule R12-15-811.H.2, requires that: "A monitor well shall be identified as such on the vault cover or at the top of the steel casing. Identification information will include well registration number."

Special construction standards, required pursuant to A.A.C. Rule R12-15-821: ____

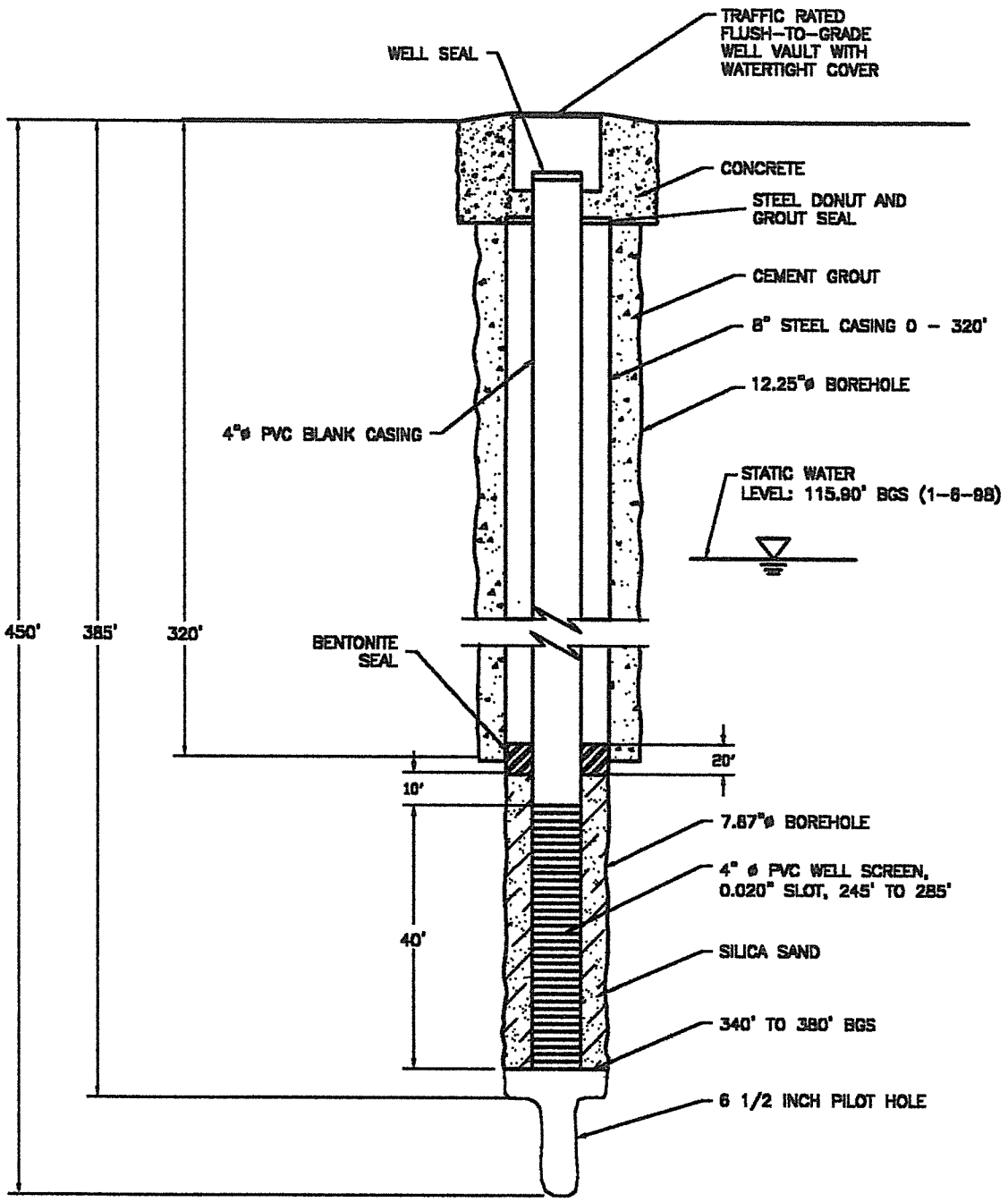

NOT TO SCALE

NOTES:
1. WATERTIGHT WELL COVER
2. HEAVY TRAFFIC RATED WELL VAULT "H20"

UNITED INDUSTRIAL CORPORATION	DATE: 6-17-98
INTERMEDIATE WELL MW-102M SECTION VIEW	DESIGNED: DB
	CHECKED: DB
	APPROVED: SAS
	DRAWN: JDD
	PROJ.: N386-113
HSI GEOTRANS A Tetra Tech Company	

../FI-REPORT/WELL-102M.DWG

HSI GEOTRANS

Site Map

Project No: N386-119

Client: UIC

Site: WOC

Borehole No: MW-102m

Start Date/Time: 10/28/97 16:30

End Date/Time: 11/3/97 10:00

Logged By: David Broermann

Drilling Method: Mud Rotary

Borehole Diameter: 6 1/2 inches

Angle from Vertical:

Datum:

Surface Conditions: Asphalt

Depth	Sample Number	Sample Type (SS=Split Spoon, C=Cuttings, O=Other)	Blow Counts/6"	Inches Driven	Inches Recovered	PID (ppm)	Lithology	Description and Comments
								Ground Surface
0–5	1	C						**SAND (SP)** Brown, coarse sand, trace fine to medium sand
5–10	2	C						**SAND (SP)** Light brown, medium sand, trace fine to medium sand
10–15	3	C						**GRAVELY SAND (SP)** Brown, fine to coarse sand, some gravel, 2 to 5 mm
15–20	4	C						**SAND (SP)** Brown to light brown, fine to coarse sand, trace gravel
20–25	5	C						**SAND (SM)** Brown, fine to coarse sand

Drilling Contractor: Stewart Brothers

Checked By:

Date Checked:

HSI GeoTrans, Inc.
4665 South Ash Avenue, Suite G-1
Tempe, Arizona 85282
Voice: 602-839-2800 Fax: 602-839-2828

HSI GEOTRANS

Site Map

Project No: N386-119

Client: UIC

Site: WOC

Borehole No: MW-102m

Start Date/Time: 10/28/97 16:30

End Date/Time: 11/3/97 10:00

Logged By: David Broermann

Drilling Method: Mud Rotary

Borehole Diameter: 6 1/2 inches

Angle from Vertical:

Datum:

Surface Conditions: Asphalt

Depth	Sample Number	Sample Type (SS=Split Spoon, C=Cuttings, O=Other)	Blow Counts/6"	Inches Driven	Inches Recovered	PID (ppm)	Lithology	Description and Comments
55	6	C						**SAND (SM)** Brown, fine to coarse sand, angular coarse sand
60								
65	7	C						**SAND (SM)** Brown, fine to coarse sand, some silt, angular-coarse sand, trace fine gravel (<6mm)
70								
75	8	C						**SILTY SAND (SM)** Brown, fine to coarse sand, silt, rounded to angular sand
80								
85	9	C						**SILTY SAND (SM)** Brown, fine to medium sand, silt, some coarse sand and gravel (<15 mm)
90								
95	10	C						**SILTY SAND (SM)** Brown, fine to medium sand, silt, some coarse sand and gravel <15 mm
100								

Drilling Contractor: Stewart Brothers

Checked By:

Date Checked:

HSI GeoTrans, Inc.
4665 South Ash Avenue, Suite G-1
Tempe, Arizona 85282
Voice: 602-839-2800 Fax: 602-839-2828

HSI GEOTRANS

Site Map

Project No: N386-119

Client: UIC

Site: WOC

Borehole No: MW-102m

Start Date/Time: 10/28/97 16:30

End Date/Time: 11/3/97 10:00

Logged By: David Broermann

Drilling Method: Mud Rotary

Borehole Diameter: 6 1/2 inches

Angle from Vertical:

Datum:

Surface Conditions: Asphalt

Depth	Sample Number	Sample Type (SS=Split Spoon, C=Cuttings, O=Other)	Blow Counts/6"	Inches Driven	Inches Recovered	PID (ppm)	Lithology	Description and Comments
105–110	11	C						**SILTY SAND (SM)** Brown, fine to coarse sand, silt, some gravel
115–120	12	C						**SAND some silt (SM)** Brown, fine to coarse sand, silt, angular to rounded coarse sand
125–130	13	C						**SILTY SAND (SM)** Brown, fine to coarse sand, silt, trace clay
135–140	14	C						**SILTY SAND (SM)** Brown, fine to medium sand, silt, trace coarse sand
145–150	15	C						**SILTY SAND (SM)** Brown, very fine to coarse sand, silt, some clay, trace gravel

Drilling Contractor: Stewart Brothers

Checked By:

Date Checked:

HSI GeoTrans, Inc.
4665 South Ash Avenue, Suite G-1
Tempe, Arizona 85282
Voice: 602-839-2800 Fax: 602-839-2828

HSI GEOTRANS

Site Map

Project No: N386-119

Client: UIC

Site: WOC

Borehole No: MW-102m

Start Date/Time: 10/28/97 16:30

End Date/Time: 11/3/97 10:00

Logged By: David Broermann

Drilling Method: Mud Rotary

Borehole Diameter: 6 1/2 inches

Angle from Vertical:

Datum:

Surface Conditions: Asphalt

Depth	Sample Number	Sample Type (SS=Split Spoon, C=Cuttings, O=Other)	Blow Counts/6"	Inches Driven	Inches Recovered	PID (ppm)	Lithology	Description and Comments
155	16	C						**SANDY SILT (ML)** Brown, silt, very fine to coarse sand
160								
165	17	C						**SAND some silt and gravel (SM)** Brown, fine to coarse sand, some silt and gravel
170								
175	18	C						**SANDY SILT SANDY CLAY (ML-CL)** Brown to light brown, silt, clay, fine to coarse sand
180								
185	19	C						**SILTY SAND-SAND (SM-SP)** Brown, fine to coarse sand, silt, some gravel
190								
195	21	C						**SANDY CLAY (SC)** Light brown, clay, fine to coarse sand, trace gravel
200								

Drilling Contractor: Stewart Brothers

Checked By:

Date Checked:

HSI GeoTrans, Inc.
4665 South Ash Avenue, Suite G-1
Tempe, Arizona 85282
Voice: 602-839-2800 Fax: 602-839-2828

HSI GEOTRANS

Site Map

Project No: N386-119

Client: UIC

Site: WOC

Borehole No: MW-102m

Start Date/Time: 10/28/97 16:30

End Date/Time: 11/3/97 10:00

Logged By: David Broermann

Drilling Method: Mud Rotary

Borehole Diameter: 6 1/2 inches

Angle from Vertical:

Datum:

Surface Conditions: Asphalt

Depth	Sample Number	Sample Type (SS=Split Spoon, C=Cuttings, O=Other)	Blow Counts/6"	Inches Driven	Inches Recovered	PID (ppm)	Lithology	Description and Comments
205	22	C						**SANDY CLAY (CL)** Brown to light brown, clay, fine to coarse sand, trace gravel
210								
215	23	C						**CLAYEY SAND-SILTY SAND- (CL-ML)** Brown to light brown, fine to medium sand, trace coarse sand
220								
225	24	C						**CLAYEY SAND-SILTY SAND- (SC-ML)** Brown to light brown, fine to medium sand, clay, silt, trace coarse sand
230								
235	25	C						**CLAYEY SAND-SILTY SAND- (SC-ML)** Brown to light brown, fine to medium sand, silt, clay, trace coarse sand
240								
245	26	C						**CLAYEY SAND-SILTY SAND- (SC-ML)** Brown to light brown, fine to medium sand, clay, silt, trace coarse sand
250								

Drilling Contractor: Stewart Brothers

Checked By:

Date Checked:

HSI GeoTrans, Inc.
4665 South Ash Avenue, Suite G-1
Tempe, Arizona 85282
Voice: 602-839-2800 Fax: 602-839-2828

HSI GEOTRANS

Site Map

Project No: N386-119

Client: UIC

Site: WOC

Borehole No: MW-102m

Start Date/Time: 10/28/97 16:30

End Date/Time: 11/3/97 10:00

Logged By: David Broermann

Drilling Method: Mud Rotary

Borehole Diameter: 6 1/2 inches

Angle from Vertical:

Datum:

Surface Conditions: Asphalt

Depth	Sample Number	Sample Type (SS=Split Spoon, C=Cuttings, O=Other)	Blow Counts/6"	Inches Driven	Inches Recovered	PID (ppm)	Lithology	Description and Comments
255	27	C						**SANDY CLAY (CL)** Brown to light brown, clay, fine to medium sand, trace coarse sand
260								
265	28	C						**CLAYEY SILTY SAND (SC-SM)** Light brown, fine sand and silt and clay
270								
275	29	C						**SANDY CLAY (CL)** Light brown, clay, fine sand
280								
285	30	C						**CLAYEY SAND (SC)** Light brown, fine sand, clay, trace medium and coarse sand
290								
295	31	C						**CLAYEY SAND (SC)** Light brown, fine sand, clay, trace medium and coarse sand
300								

Drilling Contractor: Stewart Brothers

Checked By:

Date Checked:

HSI GeoTrans, Inc.
4665 South Ash Avenue, Suite G-1
Tempe, Arizona 85282
Voice: 602-839-2800 Fax: 602-839-2828

HSI GEOTRANS

Site Map

Project No: N386-119

Client: UIC

Site: WOC

Borehole No: MW-102m

Start Date/Time: 10/28/97 16:30

End Date/Time: 11/3/97 10:00

Logged By: David Broermann

Drilling Method: Mud Rotary

Borehole Diameter: 6 1/2 inches

Angle from Vertical:

Datum:

Surface Conditions: Asphalt

Depth	Sample Number	Sample Type (SS=Split Spoon, C=Cuttings, O=Other)	Blow Counts/6"	Inches Driven	Inches Recovered	PID (ppm)	Lithology	Description and Comments
305	32	C						**SANDY CLAY(CL)** Brown, clay, fine sand
310								
315	33	C						**SANDY CLAY (CL)** Brown, clay, fine to medium sand
320								
325	34	C						**SANDY CLAY (CL)** Brown, clay, fine to medium sand
330								
335	35	C						**CLAYEY SAND (SC)** Brown, fine to coarse sand, clay
340								
345	36	C						**CLAYEY SAND (SC)** Brown, fine to medium sand, clay
350								

Drilling Contractor: Stewart Brothers

Checked By:

Date Checked:

HSI GeoTrans, Inc.
4665 South Ash Avenue, Suite G-1
Tempe, Arizona 85282
Voice: 602-839-2800 Fax: 602-839-2828

HSI GEOTRANS

Site Map

Project No: N386-119

Client: UIC

Site: WOC

Borehole No: MW-102m

Start Date/Time: 10/28/97 16:30

End Date/Time: 11/3/97 10:00

Logged By: David Broermann

Drilling Method: Mud Rotary

Borehole Diameter: 6 1/2 inches

Angle from Vertical:

Datum:

Surface Conditions: Asphalt

Depth	Sample Number	Sample Type (SS=Split Spoon, C=Cuttings, O=Other)	Blow Counts/6"	Inches Driven	Inches Recovered	PID (ppm)	Lithology	Description and Comments
355	37	C						**CLAYEY SAND (SC)** Brown, fine to medium sand, clay
360								
365	38	C						**SILTY SAND-SAND (SM-SP)** Brown, fine to coarse sand, silt
370								
375	39	C						**SAND-SANDY GRAVEL (SM-GP)** Brown, fine to coarse sand, fine to medium gravel, angular gravel
380								
385	40	C						**SAND and SANDY GRAVEL** Light brown, fine to coarse sand, fine gravel
390								
395	41	C						**SANDY CLAY (SC)** Brown, clay, fine sand
400								

Drilling Contractor: Stewart Brothers

Checked By:

Date Checked:

HSI GeoTrans, Inc.
4665 South Ash Avenue, Suite G-1
Tempe, Arizona 85282
Voice: 602-839-2800 Fax: 602-839-2828

HSI GEOTRANS

Site Map

Project No: N386-119

Client: UIC

Site: WOC

Borehole No: MW-102m

Start Date/Time: 10/28/97 16:30

End Date/Time: 11/3/97 10:00

Logged By: David Broermann

Drilling Method: Mud Rotary

Borehole Diameter: 6 1/2 inches

Angle from Vertical:

Datum:

Surface Conditions: Asphalt

Depth	Sample Number	Sample Type (SS=Split Spoon, C=Cuttings, O=Other)	Blow Counts/6"	Inches Driven	Inches Recovered	PID (ppm)	Lithology	Description and Comments
405	42	C						**CLAYEY SAND (SC)** Brown, fine to medium sand
410								
415	43	C						**SANDY CLAY (CL)** Brown, fine sand, clay
420								
425	44	C						**CLAY some sand (CL)** Brown, clay, fine sand
430								
435	45	C						**CLAY trace sand (CL)** Brown, clay, fine to mediumsand
440								**CLAY trace sand (CL)** Brown, clay, fine to medium sand
445	46	C						
450								TOTAL Depth 450

Drilling Contractor: Stewart Brothers

Checked By:

Date Checked:

Sheet: 9 of 9

HSI GeoTrans, Inc.
4665 South Ash Avenue, Suite G-1
Tempe, Arizona 85282
Voice: 602-839-2800 Fax: 602-839-2828

N386-119
☐ file MW-102M

ELECTRIC LOGS FOR MW-102M

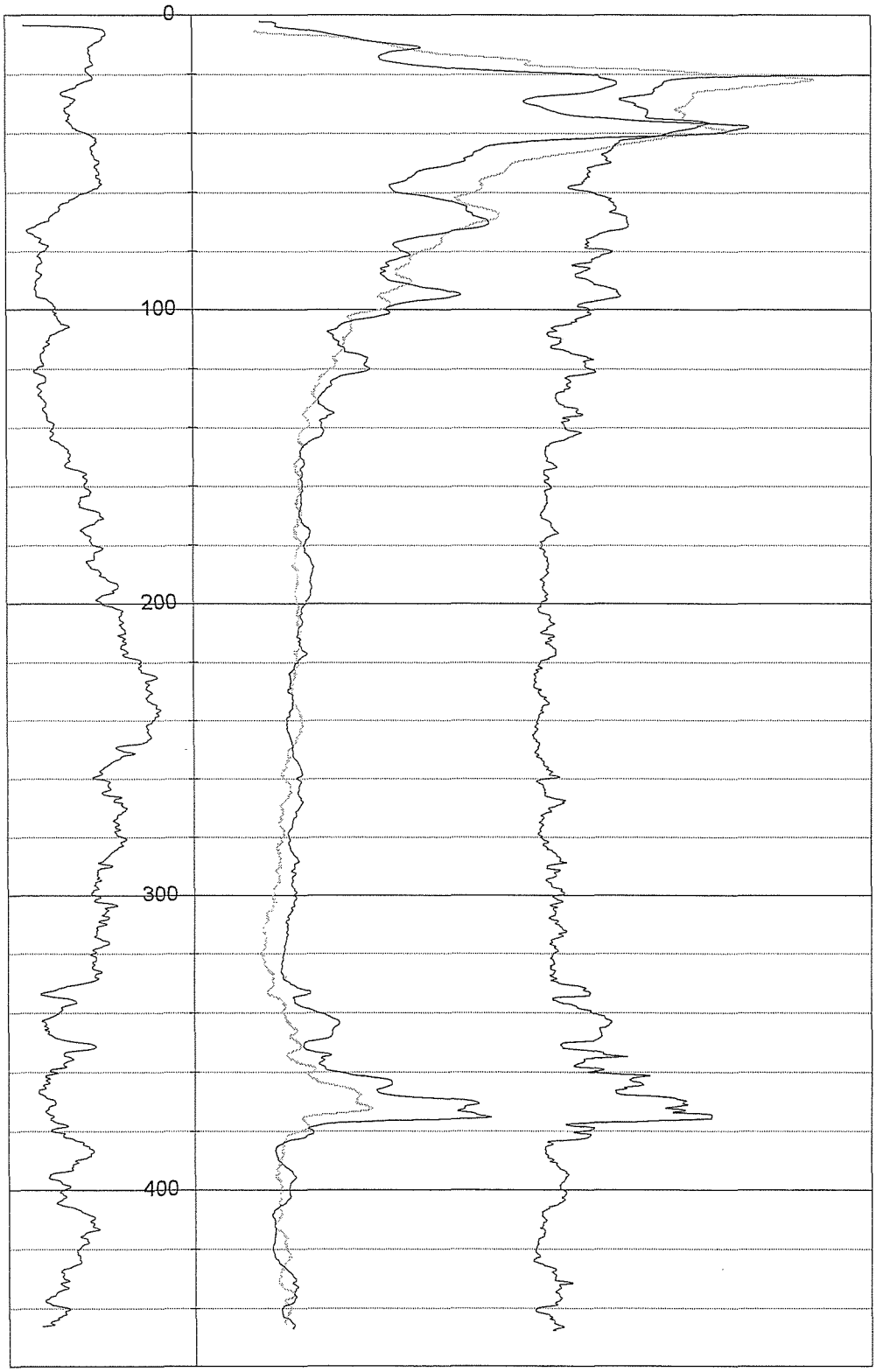

Self Potential

Resistivity and Single Point Resistance

MONITOR WELL CONSTRUCTION SUMMARY

Well No. MW-102m

Boring No. X-Ref:

Map Coords: 4051 N, 5402 E

Elevation Ground Level:

Job Number: N386-119

Top of Casing: 1105.45

Drilling Summary:	
Total Depth	380 feet
Borehole Diameter	7 7/8 inches
Casing Stick-Up	0
Driller	Stewart Brothers Drilling Co.
Rig	Gardner Denver 1500
Bit(s)	0-450 feet: 6 1/2" tricone 0-320 feet: 12 1/4" tricone 0-385 feet: 7 7/8" tricone
Drilling Fluid	Bentonite mud
Protective Casing	None

Comments: 6 ½ inch pilot hole was drilled from 0 to 450 feet. The hole was logged and then reamed to 320 feet, using a 12 1/4 inch bit. Eight inch steel casing was then set to 320 feet and grouted in place. A 7 7/8 inch bit was then used to drill to a depth of 385 feet.

Construction Time Log: **Start** 10/28/97 **Finish** 11/4/97				
	Date	Time	Date	Time
Drilling (6 1/2")	10/28/97	16:30	10/30/97	11:00
(12 1/4")	10/31/97	7:00	11/03/97	10:00
(7 7/8")	11/05/97	7:00	11/05/97	11:15
Geophys. Logging	10/30/97	12:45	10/30/97	15:00
Casing: 8"	11/03/97	13:30	11/04/97	9:45
Casing: 4"	11/05/97	13:45	11/05/97	15:45
Sand Pack:	11/05/97	15:45	11/06/97	9:15
Cementing:	11/04/97	10:30	11/04/97	14:00
Development:	11/05/97	17:00	1/22/98	14:30

Well Design & Specifications

Basis: Geologic Log x Geophysical Log x

Casing String(s): C = Casing S = Screen

Depth (ft)	String (C1, S1, etc.)	Elevation (ft)
0 to 320	C1- 8" LCS	
0 to 10	C2- 4" LCS	
10 to 340	C3 - 4" Schedule 40 PVC	
340 to 380	S1 - 4" Schedule 40 PVC	
to		

Casing:	C1	8" Low carbon steel blank casing (8⅝' OD)
	C2	4" Low carbon steel blank casing
	C3	4" Schedule 40 PVC blank casing
Screen:	S1	4" Schedule 40 PVC factory 0.020"
	S2	
Filter Pack:		330'-385': 8-12 Colorado silica sand.
Grout Seal:		0-320': neat cement with 3.5% bentonite
Seal:		310'-330' Bentonite pellets

Well Development: Well was bailed by the driller when the well was being sand packed and after completed for a total of 5.25 hours. MW-102m was developed at a later date using a 4" submersible pump. The pump was raised and lowered in the well to surge and purge at the same time.

A ½ hP submersible pump was installed at a depth of 305 feet.

An Aardvark packer was set at 300 feet.

Stabilization Test Data:

Time	pH	Spec. Cond. μs/m	Temp (C)
13:00	10.24	1225	25.4
13:40	9.77	1241	26.1
14:00	9.56	1220	26.0

Pumped 1800 gallons total

Site Name: West Osborn Complex

Location: 3605 West Osborn Road

Supervised By: David Broermann

Date: 3/26/98

STATE OF ARIZONA
DEPARTMENT OF WATER RESOURCES
GROUNDWATER MANAGEMENT SUPPORT SECTION
MAIL TO: P.O. BOX 458, PHOENIX, ARIZONA 85001-0458
500 NORTH THIRD STREET, PHOENIX, ARIZONA 85004-3903
PHONE (602) 417-2470 FAX (602) 417-2422

MW-102M

RECEIVED SEP 18 1997 GROUNDWATER

NOTICE OF INTENTION TO DRILL MONITOR/PIEZOMETER WELL

PLEASE READ GENERAL INSTRUCTIONS ON REVERSE SIDE OF THIS FORM BEFORE COMPLETING.

Section §45-596, Arizona Revised Statues provide: Prior to drilling a monitor or piezometer well, a Notice of Intention to Drill shall be filed with the Department.

1 Well/Land Location:

2N (Township) 2E (Range) 27 (Section)

NE ¼ (10 Acre) NE ¼ (40 Acre) SE ¼ (160 Acre)

2. Position location of the well on the land:

Latitude 33 o 29 ' 12 "

Longitude 112 o 08 ' 07 "

3. County: Maricopa

4. Owner of well:
United Industrial Corporation
Name
4665 South Ash
Address
Tempe (City) Az (State) 85282 (Zip)

Phone Number (602) 839-2800

5. Lessee of the land of wellsite:

NA
Name

Address

City Sate Zip

Telephone Number

6. Owner of the land of wellsite:
Frank Soris
Name
3505 West Osborn Road
Address
Phoenix (City) Az. (Sate) 85019 (Zip)

Telephone Number 602-278-0931

7. Consulting firm:

HSI GeoTrans, Inc.
Name
David Broermann
Contact Person
(602) 839-2800
Phone Number

8. Purpose of well drilled pursuant to this notice:
Monitor XXXXXX
~~Piezometer~~

9. If for deepening or modifying, list well registration number:
55-

FOR DEPARTMENT USE ONLY
File No. A(2-2)27 daa
Filed 9-18-97 By WD
Input By
DUPLICATE
Mailed 10/7/97 By ab
Registration 55- 564732
AMA/INA PNA
W/S 07 S/B 04

10. Will this proposed well be associated with a permit: Yes ___ No XX
If yes, Permit No. ___

11. Construction will start:
October (Month) 10 (Day) 1997 (Year)

12. Period well will remain in use:
10 Month/Years

13. For monitoring wells, is pump equipment to be installed?
Yes XXXX No ___
(a) If yes, design pump capacity:
10 - 15 GPM
(b) What use will be made of the water:
Sampled and disposed

14. Drilling Firm:
Stewart Brothers Drilling Co.
Name
P.O. Box 2067
Address
Milans (City) NM (State) 87021 (Zip)

1-505-287-2986
Telephone Number

314
DWR License Number

A-4
ROC License Category

15. Proposed method of abandonment of well after project is completed: In accordance with A.A.C. R12-15-811, pursuant to R12-15-816

16. Is this well to monitor existing contamination? ___ **Potential contamination** XX **Please explain:** Monitor wells will monitor potential-existing contamination previously identified in other monitor wells.

I state that this Notice is filed in compliance with Rule A.A.C. R12-15-809 and R12-15-816(F), and is complete and correct to the best of my knowledge and belief and that I understand the limitations and conditions set forth on the reverse side of this form.

Frank Soris — Sept 16, 1997

Typed or Printed Name — Signature [X] Land Owner [ ] Lessee of Wellsite — Date

17. If construction plans have been coordinated with Arizona Department of Environmental Quality, who is the agency contact? Ms. Anna Vargus

If construction plans have been coordinated with Arizona Department of Water Resources, who is the agency contact? None

18. WELL CONSTRUCTION PLAN:

a) Drilling method (mud rotary, hollow-stem auger, etc.) Mud Rotary

b) Borehole diameters: 12 inches from 0 feet to 250 feet.
7 7/8 inches from 250 feet to 300 feet.

c) Casing materials (PVC, steel, hollow-stem auger, etc.)

material Schedule 40 low carbon steel diameter 8 inches from 0 feet to 250 feet.
material Schedule 40 PVC diameter 4 inches from 0 feet to 260 feet.

d) Method of sealing at reductions grout seal

e) Annular seal materials (cement, grout, etc.); method of placement (tremied, circulated):

material cement grout method tremied from 0 feet to 250 feet.
material bentonite method tremied from 250 feet to 253 feet.

f) Filter packs (state material):
material silica sand from 253 feet to 300 feet.
material from feet to feet.

g) Perforation or screen specification:

type 4-inch, schedule 40 PVC 0.010" slot from 260 feet to 300 feet.
type from feet to feet.

h) Method of well development (bail, air lift, surge) Air-lift, jet, surge and pump

i) Will surface or conductor casing extend above grade? Yes ____ No XXX

19. Include detailed construction diagram showing expected water depth in feet below land surface, and details of vault, if specified.

GENERAL INSTRUCTION

1. Please submit two original notices, with original signatures, and check or money order (no cash) in the amount of $ 10.00, to P.O. Box 458, Phoenix, Arizona 85001-0458 or hand deliver to 500 North Third Street, Phoenix, Arizona 85004-3903.

CONDITIONS

1. If an individual other than the land owner or lessee, signs this notice, an original letter of authorization from the land owner/lessee, stating that the individual has permission to sign this specific Notice on their behalf, shall accompany the Notice of Intention to Drill a Monitor/Piezometer Well form.

2. Construction and abandonment standards for all wells shall be in accordance with A.A.C. R12-15-811 and R12-15-816.

3. Drilling of the well shall be completed within one year after the date of Notice.

4. A Well Driller Report is required within thirty days of completion of drilling. A Completion Report is required to be filed with the Department within thirty days after installation of pump equipment for monitor wells.

5. Pump equipment may not be installed on a well drilled for piezometer purposes. If a monitor will is pumped, pumping is limited to the maximum amount required for monitor purposes, but in no case may exceed 35 gallons per minute and an annual volume of 10 acre feet total.

6. A.A.C. Rule R12-15-811.H.2, requires that: "A monitor well shall be identified as such on the vault cover or at the top of the steel casing. Identification information will include well registration number."

7. Special construction standards, required pursuant to A.A.C. Rule R12-15-821: ____

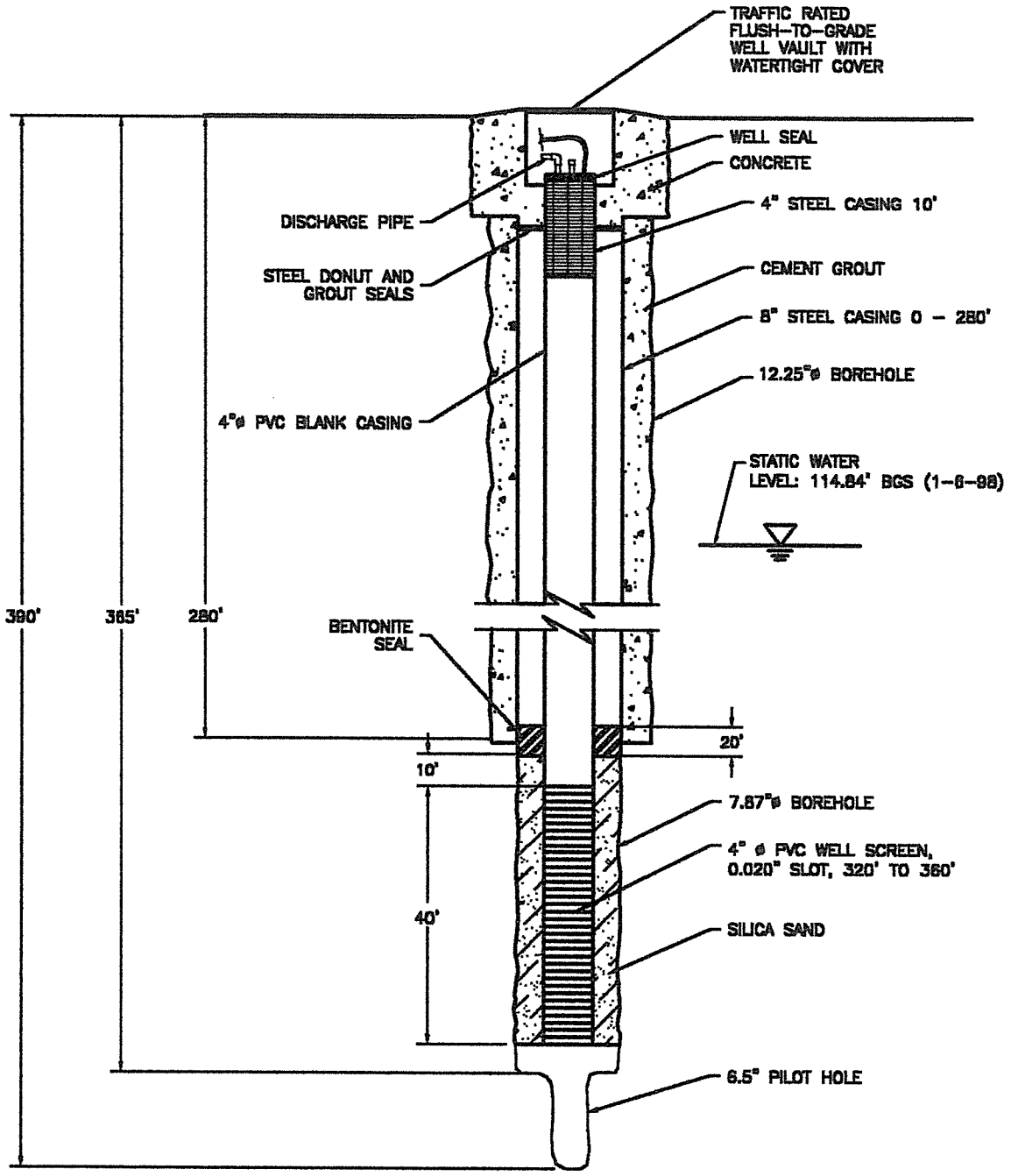

NOT TO SCALE

UNITED INDUSTRIAL CORPORATION	DATE: 10-8-97
INTERMEDIATE WELL MW-105M SECTION VIEW	DESIGNED:
	CHECKED:
	APPROVED:
	DRAWN: JDD
	PROJ.: N386-113
HSI GEOTRANS A Tetra Tech Company	

.../N-REPORT/WELL-105M.DWG

HSI GEOTRANS

Site Map

Project No: N386-119

Client: UIC

Site: WOC

Borehole No: MW-105m

Start Date/Time: 12/1/97 16:45

End Date/Time: 12/2/97 11:30

Logged By: David Broermann

Drilling Method: Mud Rotary

Borehole Diameter: 6 1/2 inches

Angle from Vertical:

Datum:

Surface Conditions: Concrete

Depth	Sample Number	Sample Type (SS=Split Spoon, C=Cuttings, O=Other)	Blow Counts/6"	Inches Driven	Inches Recovered	PID (ppm)	Lithology	Description and Comments
								Ground Surface
0–5	1	C						**SILTY SAND SANDY SILT (SM-ML)** Brown, fine to coarse sand, silt, trace coarse sand
5–15	2	C						**SILTY SAND (SM)** Brown, fine to coarse sand (80-90%), silt (10-15%), trace gravel (<5%), subangular coarse sand and gravel
15–25	3	C						**SAND some silt (SM)** Brown, fine to coarse sand, some silt, trace clay
25–35	4	C						**SILTY SAND (SM)** Brown to light brown, fine to coarse sand, silt, trace clay and caliche
35–45	5	C						**SAND some silt (SM)** Brown, fine to coarse sand, angular to subangular coarse sand, silt, trace clay and caliche
45–50								

Drilling Contractor: Stewart Brothers

Checked By:

Date Checked:

HSI GeoTrans, Inc.
4665 South Ash Avenue, Suite G-1
Tempe, Arizona 85282
Voice: 602-839-2800 Fax: 602-839-2828

HSI GEOTRANS

Site Map

Project No: N386-119

Client: UIC

Site: WOC

Borehole No: MW-105m

Start Date/Time: 12/1/97 16:45

End Date/Time: 12/2/97 11:30

Logged By: David Broermann

Drilling Method: Mud Rotary

Borehole Diameter: 6 1/2 inches

Angle from Vertical:

Datum:

Surface Conditions: Concrete

Depth	Sample Number	Sample Type (SS=Split Spoon, C=Cuttings, O=Other)	Blow Counts/6"	Inches Driven	Inches Recovered	PID (ppm)	Lithology	Description and Comments
55	6	C						**SILTY SAND-SANDY SILT(SM-ML)** Brown, fine to coarse sand, silt, trace clay and caliche
60								
65	7	C						**SAND some silt (SM)** Brown to light brown, fine to coarse sand, silt (5-15%), angular-coarse sand, trace coarse sand 1/4"
70								
75	8	C						**SILTY SAND (SM)** Brown to light brown, fine to medium sand, silt, rounded to angular sand, trace caliche
80								
85	9	C						**SILTY SAND-SANDY SILT (SM-ML)** Brown, fine to medium sand, silt, trace caliche, trace to some gravel 1/4"-1/3"
90								
95	10	C						**SILTY SAND (SM)** Brown, fine to coarse sand, silt and clay (10-15%), sand (85-90%), trace caliche
100								

Drilling Contractor: Stewart Brothers

Checked By:

Date Checked:

HSI GeoTrans, Inc.
4665 South Ash Avenue, Suite G-1
Tempe, Arizona 85282
Voice: 602-839-2800 Fax: 602-839-2828

HSI GEOTRANS

Site Map

Project No: N386-119

Client: UIC

Site: WOC

Borehole No: MW-105m

Start Date/Time: 12/1/97 16:45

End Date/Time: 12/2/97 11:30

Logged By: David Broermann

Drilling Method: Mud Rotary

Borehole Diameter: 6 1/2 inches

Angle from Vertical:

Datum:

Surface Conditions: Concrete

Depth	Sample Number	Sample Type (SS=Split Spoon, C=Cuttings, O=Other)	Blow Counts/6"	Inches Driven	Inches Recovered	PID (ppm)	Lithology	Description and Comments
105	11	C						**SILTY SAND (SM)** Brown, fine to medium sand, silt, trace coarse sand and gravel
110								
115	12	C						**SAND some silt (SM)** Brown, fine to coarse sand, angular to rounded coarse sand, some silt
120								
125	13	C						**SILTY SAND (SM)** Brown, fine to coarse sand, silt, trace clay
130								
135	14	C						**SILTY SAND** Brown, fine to medium sand, silt, trace to some coarse sand and clay
140								
145	15	C						**SILTY SAND some clay (SM)** Brown, very fine to medium sand, silt, trace coarse sand, rounded to subangular sand
150								

Drilling Contractor: Stewart Brothers

Checked By:

Date Checked:

HSI GeoTrans, Inc.
4665 South Ash Avenue, Suite G-1
Tempe, Arizona 85282
Voice: 602-839-2800 Fax: 602-839-2828

HSI GEOTRANS

Site Map

Project No: N386-119

Client: UIC

Site: WOC

Borehole No: MW-105m

Start Date/Time: 12/1/97 16:45

End Date/Time: 12/2/97 11:30

Logged By: David Broermann

Drilling Method: Mud Rotary

Borehole Diameter: 6 1/2 inches

Angle from Vertical:

Datum:

Surface Conditions: Concrete

Depth	Sample Number	Sample Type (SS=Split Spoon, C=Cuttings, O=Other)	Blow Counts/6"	Inches Driven	Inches Recovered	PID (ppm)	Lithology	Description and Comments
155	16	C						**SAND some silt (SM)** Brown, very fine to coarse sand, some silt
160								
165	17	C						**SAND some silt and gravel (SM)** Brown, fine to coarse sand, some silt and gravel1/4"-1/3", rounded to angular gravel and sand
170								
175	18	C						**SANDY SILT trace clay (ML)** Brown to light brown, silt, fine sand, trace caliche and clay
180								
185	19	C						**SILTY SAND-SAND (SM-SP)** Brown, fine to coarse sand, silt, rounded to subangular sand
190								
195	21	C						**SANDY SILT (ML)** Light brown, silt, fine to medium sand, trace coarse sand and caliche
200								

Drilling Contractor: Stewart Brothers

Checked By:

Date Checked:

HSI GeoTrans, Inc.
4665 South Ash Avenue, Suite G-1
Tempe, Arizona 85282
Voice: 602-839-2800 Fax: 602-839-2828

HSI GEOTRANS

Site Map

Project No: N386-119

Client: UIC

Site: WOC

Borehole No: MW-105m

Start Date/Time: 12/1/97 16:45

End Date/Time: 12/2/97 11:30

Logged By: David Broermann

Drilling Method: Mud Rotary

Borehole Diameter: 6 1/2 inches

Angle from Vertical:

Datum:

Surface Conditions: Concrete

Depth	Sample Number	Sample Type (SS=Split Spoon, C=Cuttings, O=Other)	Blow Counts/6"	Inches Driven	Inches Recovered	PID (ppm)	Lithology	Description and Comments
205	22	C						**SANDY SILT (ML)** Brown to light brown, silt, fine sand,trace medium and coarse sand, trace clay
210								
215	23	C						**SAND SILT (ML)** Brown to light brown, silt, fine sand, trace medium and coarse sand, trace clay
220								
225	24	C						**SANDY SILT (ML)** Brown to light brown, silt, fine sand, trace medium and coarse sand, trace clay
230								
235	25	C						**SANDY SILT (ML)** Brown to light brown, silt, fine sand, trace medium and coarse sand, trace clay
240								
245	26	C						**SANDY SILT (ML)** Brown to light brown, silt, fine sand, trace medium and coarse sand, trace clay
250								

Drilling Contractor: Stewart Brothers

Checked By:

Date Checked:

HSI GeoTrans, Inc.
4665 South Ash Avenue, Suite G-1
Tempe, Arizona 85282
Voice: 602-839-2800 Fax: 602-839-2828

HSI GEOTRANS

Site Map

Project No: N386-119

Client: UIC

Site: WOC

Borehole No: MW-105m

Start Date/Time: 12/1/97 16:45

End Date/Time: 12/2/97 11:30

Logged By: David Broermann

Drilling Method: Mud Rotary

Borehole Diameter: 6 1/2 inches

Angle from Vertical:

Datum:

Surface Conditions: Concrete

Depth	Sample Number	Sample Type (SS=Split Spoon, C=Cuttings, O=Other)	Blow Counts/6"	Inches Driven	Inches Recovered	PID (ppm)	Lithology	Description and Comments
255	27	C						**SANDY SILT (ML)** Light brown, silt, fine sand, trace clay
260								
265	28	C						**SANDY SILT SILTY SAND (SM-ML)** Light brown, fine sand, silt, trace clay
270								
275	29	C						**SANDY SILT (ML)** Light brown, silt, fine sand, trace clay
280								
285	30	C						**SILTY SAND (SM)** Light brown, fine sand, silt, trace clay, trace medium sand, trace caliche
290								
295	31	C						**SILTY SAND (SM)** Brown, fine to medium sand, silt, trace clay, trace caliche
300								

Drilling Contractor: Stewart Brothers

Checked By:

Date Checked:

HSI GeoTrans, Inc.
4665 South Ash Avenue, Suite G-1
Tempe, Arizona 85282
Voice: 602-839-2800 Fax: 602-839-2828

HSI GEOTRANS

Site Map

Project No: N386-119

Client: UIC

Site: WOC

Borehole No: MW-105m

Start Date/Time: 12/1/97 16:45

End Date/Time: 12/2/97 11:30

Logged By: David Broermann

Drilling Method: Mud Rotary

Borehole Diameter: 6 1/2 inches

Angle from Vertical:

Datum:

Surface Conditions: Concrete

Depth	Sample Number	Sample Type (SS=Split Spoon, C=Cuttings, O=Other)	Blow Counts/6"	Inches Driven	Inches Recovered	PID (ppm)	Lithology	Description and Comments
305	32	C						**SANDY SILT (ML)** Brown, silt, fine sand, trace clay
310								
315	33	C						**SILTY SAND SAND some silt (SM-SP)** Brown, fine to medium sand, silt, trace clay
320								
325	34	C						**SILTY SAND (SM)** Brown, fine to medium sand, silt, trace clay
330								
335	35	C						**SILTY SAND (ML)** Brown, fine to medium sand, silt, trace clay
340								
345	36	C						**SILTY SAND some gravel** Brown, fine to coase sand, rounded to angular sand and gravel, trace caliche, trace gravel 1/4"-1/3"
350								

Drilling Contractor: Stewart Brothers

Checked By:

Date Checked:

HSI GeoTrans, Inc.
4665 South Ash Avenue, Suite G-1
Tempe, Arizona 85282
Voice: 602-839-2800 Fax: 602-839-2828

HSI GEOTRANS

Site Map

Project No: N386-119

Client: UIC

Site: WOC

Borehole No: MW-105m

Start Date/Time: 12/1/97 16:45

End Date/Time: 12/2/97 11:30

Logged By: David Broermann

Drilling Method: Mud Rotary

Borehole Diameter: 6 1/2 inches

Angle from Vertical:

Datum:

Surface Conditions: Concrete

Depth	Sample Number	Sample Type (SS=Split Spoon, C=Cuttings, O=Other)	Blow Counts/6"	Inches Driven	Inches Recovered	PID (ppm)	Lithology	Description and Comments
355–360	37	C						**SILTY SAND (SM)** Brown, fine to medium sand, silt (5-15%), trace clay, trace coarse sand
360–365	38	C						**SILTY SAND-SAND (SM-SP)** Brown, fine to medium sand, silt (5-15%), trace clay, trace coarse sand, trace gracel 1/4"-1/3"
365–370	39	C						**SILTY SAND SANDY SILT (ML-SM)** Brown, fine to medium sand, trace clay
370–375	40	C						**SILTY SAND and CLAYEY SAND** Light brown, fine to medium sand, clay and silt
375–380	41	C						**SANDY SILT** Brown, fine sand, trace and some clay,
380–385								Total Depth 390'
385–390								
390–395								
395–400								

Drilling Contractor: Stewart Brothers

Checked By:

Date Checked:

Sheet: 8 of 8

HSI GeoTrans, Inc.
4665 South Ash Avenue, Suite G-1
Tempe, Arizona 85282
Voice: 602-839-2800 Fax: 602-839-2828

MONITOR WELL CONSTRUCTION SUMMARY

Well No. MW-105m

Boring No. X-Ref:

Map Coords: 4084 N, 2775 E

Elevation Ground Level:

Job Number: N386-119

Top of Casing:

Drilling Summary:		Construction Time Log: **Start** 12/1/97 **Finish** 12/897				
Total Depth	360 feet		Date	Time	Date	Time
Borehole Diameter	7 7/8 inches	Drilling (6 1/2")	12/1/97	11:45	12/2/97	14:30
Casing Stick-Up	0	(12 1/4")	12/3/97	9:30	12/3/97	15:15
Driller	Stewart Brothers Drilling Co.	(7 7/8")	12/5/97	7:45	12/5/97	10:45
Rig	Gardner Denver 1500					
Bit(s)	0-390 feet: 6 1/2" tricone 0-285 feet: 12 1/4" tricone 0-290 feet: 7 7/8" tricone	Geophys. Logging	12/2/97	14:45	12/2/97	17:30
Drilling Fluid	Bentonite mud	Casing: 8"LCS	12/4/97	10:15	12/4/97	14:30
Protective Casing	None	Casing: 4"PVC	12/5/97	13:00	12/5/97	14:00

Comments: 6 ½ inch pilot hole was drilled from 0 to 390 feet. The hole was geophysically logged, and then reamed using a 12 1/4 inch bit to 285 feet. 8⅝-inch steel casing was then set to 285 feet and grouted in place. A 7⅞-inch bit was then used to drill to a depth of 365 feet. A steel donut was welded on to the 4" steel casing to allow placement of an inner grout seal at the surface.

Bentonite	12/8/97	7:15	12/8/97	9:00
Sand Pack:	12/5/97	14:00	12/5/97	15:45
Cementing:	12/4/97	14:30	12/4/97	16:00
Development:	12/8/97	7:15	1/29/98	1:55

Well Design & Specifications

Basis: Geologic Log x Geophysical Log x

Casing String(s): C = Casing S = Screen

Well Development: The well was bailed by the driller for approximately 6.75 hours. The well was also developed on 1/29/98 using a 4" submersible pump.

Depth (ft)	String (C1, S1, etc.)	Elevation (ft)
0 to 285	C1 - 8" LCS	
0 to 10	C2 - 4" LCS	
10 to 320	C3 - 4" PVC	
320 to 360	S1 - 4" PVC	
to		

A ½ hP Goulds submersible pump was set at a depth of 315 feet.

An Aardvark packer was set at a depth of 310 feet.

Casing:	C1	8" low carbon steel (8⅝" OD)
	C2	4" low carbon steel
	C3	4" Schedule 40 PVC blank casing
Screen:	S1	4" Schedule 40 PVC factory slotted 0.020"
	S2	
Filter Pack:		310'-360': 8-12 Colorado silica sand.
Grout Seal:		0-285': neat cement with 3.5% bentonite
Seal:		276'-310' Bentonite pellets

Stabilization Test Data:

Time	pH	Spec. Cond. μs/m	Temp (C)
11:17	7.99	1155	24.5
11:25	7.97	1276	25.1
11:47	7.28	945	26.0
11:55	7.88	1210	25.9

Site Name: West Osborn Complex

Location: 39th Drive and Mulberry

Supervised By: David Broermann

Date: 3/26/98

STATE OF ARIZONA
DEPARTMENT OF WATER RESOURCES
GROUNDWATER MANAGEMENT SUPPORT SECTION

500 NORTH THIRD STREET, PHOENIX, ARIZONA 85004-3903
PHONE (602) 417-2470 FAX (602) 417-2422

RECEIVED
OCT - 9 1997
GROUNDWATER MG

NOTICE OF INTENTION TO DRILL MONITOR/PIEZOMETER WELL

Section §45-596. Arizona Revised Statues provide: Prior to drilling a monitor or piezometer well, a Notice of Intention to Drill shall be filed with the Department.

1 Well/Land Location: (MW-105M)
2N 1E 27
Township Range Section

NE ¼ NE ¼ SW ¼
10 Acre 40 Acre 160 Acre

2. Position location of the well on the land:

Latitude 33 o 29 ' 253 "

Longitude 112 o 08 ' 646 "

3. County: _____

4. Owner of the well:

United Industrial Corporation
Name
1615 L Street, NW, Suite 700
Address
Washington, DC 20036
City Sate Zip
Phone Number 202-682-7210

essee of the land of wellsite:

Name

Address

City Sate Zip
Phone Number

6. Owner of Land and Wellsite:

City of Phoenix
Name
200 West Washington Street
Address
Phoenix, Arizona 85003-1611
City State Zip
Phone Number

7. Consulting firm:

HSI GeoTrans, Inc.
Name
David Broermann
Contact Person
602-839-2800
Phone Number

8. Purpose of well drilled pursuant to this notice:
Monitor X
Piezometer _____

9. If for deepening or modifying, list well registration number:
55-_____

DO NOT WRITE IN THIS SPACE
OFFICE RECORD
File No. A C2-127 Caa
Filed 10-8-97 By [illegible]
Issued NOV 12 1997 By _____
DUPLICATE
Mailed 10-21-97 By [illegible]
Registration 55- 516485
AMA/INA PNL
W/S 07 S/B 04

10. Construction will start:
October 1, 1997
Month Day Year

11. Period well will remain in use:
20 ~~Month~~ Years

12. For monitoring wells, is pump equipment to be installed?
Yes _____ No X
(a) If yes, design pump capacity:

(b) What use will be made of the water:

13. Drilling Firm:
Stewart Brothers Drilling Company
Name
P.O. Box 2067
Address
Milan, NM 87021-2067
City State Zip
1-505-287-2986
Telephone Number
314
DWR License Number
A-4
ROC License Category

15. Proposed method of abandonment of well after project is completed: In accordance with A.A.C. R12-15-811, pursuant to R12-15-816

16. Is this well to monitor existing contamination? _____ Potential contamination XX .Please explain: Monitor wells will monitor potential-existing contamination previously identified in other monitor wells.

I state that this Notice is filed in compliance with Rule A.A.C. R12-15-809 and R12-15-816(F), and is complete and correct to the best of my knowledge and belief and that I understand the limitations and conditions set forth on the reverse side of this form.

Thomas E. Callow, Assistant Director, Street Transportation — Thomas E Callow — 10-1-97
Typed or Printed Name — Signature [X] Land Owner [ ] Lessee of Wellsite — Date

construction plans have been coordinated with Arizona Department of Environmental Quality, who is the agency contact? ____
ls. Ann Vargus

construction plans have been coordinated with Arizona Department of Water Resources, who is the agency contact? None

VEL CONSTRUCTION PLAN:

) Drilling method (mud rotary, hollow-stem auger, etc.) Mud Rotary

) Borehole diameters: 12 inches from 0 feet to 250 feet.
7 7/8 inches from 250 feet to 300 feet.

) Casing materials (PVC, steel, hollow-stem auger, etc.)

material Schedule 40 low carbon steel diameter 8 inches from 0 feet to 250 feet.
material Schedule 40 PVC diameter 4 inches from 0 feet to 260 feet.

) Method of sealing at reductions grout seal

) Annular seal materials (cement, grout, etc.); method of placement (tremied, circulated):

material cement grout method tremied from 0 feet to 250 feet.
material bentonite method tremied from 250 feet to 253 feet.

Filter packs (state material):
material silica sand from 253 feet to 300 feet.
material ____ from ____ feet to ____ feet.

) Perforation or screen specification:

type 4-Inch, schedule 40 PVC 0.010" slot from 260 feet to 300 feet.
type ____ from ____ feet to ____ feet.

) Method of well development (bail, air lift, surge) Air-lift, jet, surge and pump

surface or conductor casing extend above grade? Yes ____ No XXX

nclude detailed construction diagram showing expected water depth in feet below land surface, and details of vault, if specified.

GENERAL INSTRUCTION

lease submit two original notices, with original signatures, and check or money order (no cash) in the amount of $ 10.00, to P.O. Box 458, hoenix, Arizona 85001-0458 or hand deliver to 500 North Third Street, Phoenix, Arizona 85004-3903.

CONDITIONS

an individual other than the land owner or lessee, signs this notice, an original letter of authorization from the land owner/lessee, stating that the individual as permission to sign this specific Notice on their behalf, shall accompany the Notice of Intention to Drill a Monitor/Piezometer Well form.

onstruction and abandonment standards for all wells shall be in accordance with A.A.C. R12-15-811 and R12-15-816.

rilling of the well shall be completed within one year after the date of Notice.

Well Driller Report is required within thirty days of completion of drilling. A Completion Report is required to be filed with the Department within thirty days ter installation of pump equipment for monitor wells.

ump equipment may not be installed on a well drilled for piezometer purposes. If a monitor will is pumped, pumping is limited to the maximum amount quired for monitor purposes, but in no case may exceed 35 gallons per minute and an annual volume of 10 acre feet total.

.A.C. Rule R12-15-811.H.2, requires that: "A monitor well shall be identified as such on the vault cover or at the top of the steel casing. Identification formation will include well registration number."

pecial construction standards, required pursuant to A.A.C. Rule R12-15-821: ____

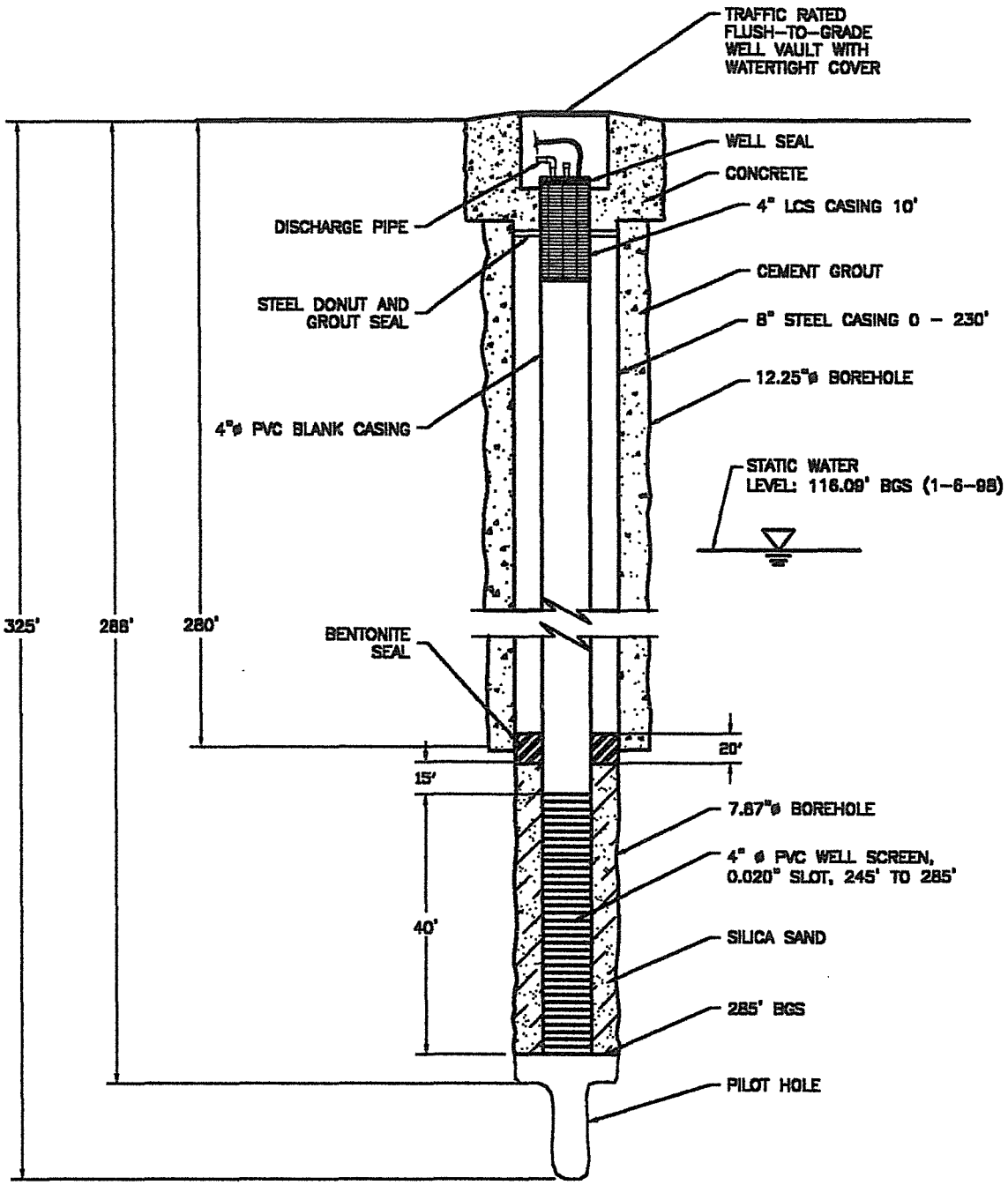

NOT TO SCALE

UNITED INDUSTRIAL CORPORATION	DATE: 7-27-98
INTERMEDIATE WELL MW-106M SECTION VIEW	DESIGNED:
	CHECKED:
	APPROVED:
	DRAWN: JDD
	PROJ.: N386-113
HSI GEOTRANS A Tetra Tech Company	

_/R-REPORT/WELL-106M.DWG

HSI GEOTRANS

Site Map

Project No: N386-119

Client: UIC

Site: WOC

Borehole No: MW-106m

Start Date/Time: 11/12/97 14:00

End Date/Time: 11/13/97 10:15

Logged By: David Broermann

Drilling Method: Mud Rotary

Borehole Diameter: 6 1/2 inches

Angle from Vertical:

Datum:

Surface Conditions: Granite Gravel

Depth	Sample Number	Sample Type (SS=Split Spoon, C=Cuttings, O=Other)	Blow Counts/6"	Inches Driven	Inches Recovered	PID (ppm)	Lithology	Description and Comments
0								Ground Surface
5	1	C						**SILTY SAND SANDY SILT (SM-ML)** Brown, fine to coarse sand, silt, trace clay
10								
15	2	C						**SANDY SILT (ML)** Brown, fine to medium sand, silt, trace coarse sand, subangular coarse sand
20								
25	3	C						**SILTY SAND SAND (ML SM)** Brown, fine to coarse sand, 70-80% medium sand, silt, trace clay
30								
35	4	C						**SILTY SAND SANDY SILT (SM-ML)** Light brown, fine to coarse sand, silt, trace clay and caliche
40								
45	5	C						**SILTY SAND SANDY SILT (SM-ML)** Light bown, fine to coarse sand, silt, angular to rounded coarse sand, trace clay and caliche
50								

Drilling Contractor: Stewart Brothers

Checked By:

Date Checked:

HSI GeoTrans, Inc.
4665 South Ash Avenue, Suite G-1
Tempe, Arizona 85282
Voice: 602-839-2800 Fax: 602-839-2828

HSI GEOTRANS

Site Map

Project No: N386-119

Client: UIC

Site: WOC

Borehole No: MW-106m

Start Date/Time: 11/12/97 14:00

End Date/Time: 11/13/97 10:15

Logged By: David Broermann

Drilling Method: Mud Rotary

Borehole Diameter: 6 1/2 inches

Angle from Vertical:

Datum:

Surface Conditions: Granite Gravel

Depth	Sample Number	Sample Type (SS=Split Spoon, C=Cuttings, O=Other)	Blow Counts/6"	Inches Driven	Inches Recovered	PID (ppm)	Lithology	Description and Comments
55–60	6	C						**SILTY SAND (SM)** Light brown, fine to coarse sand, silt, trace gravel, clay and caliche, 1/4"-1/2" angular to rounded gravel
60–65	7	C						**SILTY SAND (SM)** Light brown, fine to coarse sand, silt, trace gravel, clay and caliche, 1/4"-1/2" angular to rounded gravel
70–75	8	C						**SILTY SAND (SM)** Light brown, fine to coarse sand, silt, trace gravel, clay and caliche, 1/4"-1/2" angular to rounded gravel
80–85	9	C						**SANDY SILT SILTY SAND (ML-SM)** Light brown, fine to coarse sand, silt, trace caliche, trace to some angular and rounded gravel 1/4"-1/3"
90–95	10	C						**SANDY SILT (ML)** Brown, silt, fine to medium sand, trace caliche, trace coarse sand
100								

Drilling Contractor: Stewart Brothers

Checked By:

Date Checked:

HSI GeoTrans, Inc.
4665 South Ash Avenue, Suite G-1
Tempe, Arizona 85282
Voice: 602-839-2800 Fax: 602-839-2828

HSI GEOTRANS

Site Map

Project No: N386-119

Client: UIC

Site: WOC

Borehole No: MW-106m

Start Date/Time: 11/12/97 14:00

End Date/Time: 11/13/97 10:15

Logged By: David Broermann

Drilling Method: Mud Rotary

Borehole Diameter: 6 1/2 inches

Angle from Vertical:

Datum:

Surface Conditions: Granite Gravel

Depth	Sample Number	Sample Type (SS=Split Spoon, C=Cuttings, O=Other)	Blow Counts/6"	Inches Driven	Inches Recovered	PID (ppm)	Lithology	Description and Comments
105–110	11	C						**SILTY SAND (SM)** Brown, fine to coarse sand, silt, trace 1/4" gravel and caliche
115–120	12	C						**SILTY SAND some gravel (SM)** Brown, fine to coarse sand, coarse sand and fine gravel angular to rounded,
125–130	13	C						**SANDY SILT (ML)** Light brown, silt, fine to medium sand, trace clay
135–140	14	C						**SANDY SILT (ML)** Brown, fine to medium sand, trace clay
145–150	15	C						**SANDY SILT (ML)** Brown, silt, very fine to medium sand, trace coarse sand, rounded to subangular sand

Drilling Contractor: Stewart Brothers

Checked By:

Date Checked:

Sheet: 3 of 7

HSI GeoTrans, Inc.
4665 South Ash Avenue, Suite G-1
Tempe, Arizona 85282
Voice: 602-839-2800 Fax: 602-839-2828

HSI GEOTRANS

Site Map

Project No: N386-119

Client: UIC

Site: WOC

Borehole No: MW-106m

Start Date/Time: 11/12/97 14:00

End Date/Time: 11/13/97 10:15

Logged By: David Broermann

Drilling Method: Mud Rotary

Borehole Diameter: 6 1/2 inches

Angle from Vertical:

Datum:

Surface Conditions: Granite Gravel

Depth	Sample Number	Sample Type (SS=Split Spoon, C=Cuttings, O=Other)	Blow Counts/6"	Inches Driven	Inches Recovered	PID (ppm)	Lithology	Description and Comments
155	16	C						**SANDY SILT (ML)** Light brown, silt, very fine sand, some medium to coarse sand
160								
165	17	C						**SANDY SILT (ML)** Light brown, silt, very fine sand, some medium to coarse sand
170								
175	18	C						**SANDY SILT trace clay (ML)** Brown to light brown, fine sand, trace caliche and clay
180								
185	19	C						**SANDY SILT (ML)** Light brown, silt, very fine sand, some medium sand
190								
195	21	C						**SANDY SILT (ML)** Light brown, silt, fine to medium sand, trace caliche
200								

Drilling Contractor: Stewart Brothers

Checked By:

Date Checked:

HSI GeoTrans, Inc.
4665 South Ash Avenue, Suite G-1
Tempe, Arizona 85282
Voice: 602-839-2800 Fax: 602-839-2828

HSI GEOTRANS

Site Map

Project No: N386-119

Client: UIC

Site: WOC

Borehole No: MW-106m

Start Date/Time: 11/12/97 14:00

End Date/Time: 11/13/97 10:15

Logged By: David Broermann

Drilling Method: Mud Rotary

Borehole Diameter: 6 1/2 inches

Angle from Vertical:

Datum:

Surface Conditions: Granite Gravel

Depth	Sample Number	Sample Type (SS=Split Spoon, C=Cuttings, O=Other)	Blow Counts/6"	Inches Driven	Inches Recovered	PID (ppm)	Lithology	Description and Comments
205	22	C						**SANDY SILT (ML)** Light brown, silt, fine sand, trace clay
210								
215	23	C						**SAND SILT (ML)** Brown to light brown, silt, fine sand, trace clay
220								
225	24	C						**SANDY SILT (ML)** Brown to light brown, fine sand, trace coarse sand, trace clay
230								
235	25	C						**SILTY SAND (SM)** Brown to light brown, fine to medium sand, trace clay, trace coarse sand
240								
245	26	C						**SILTY SAND (SM)** Brown to light brown, fine to medium sand, trace coarse sand and clay
250								

Drilling Contractor: Stewart Brothers

Checked By:

Date Checked:

HSI GeoTrans, Inc.
4665 South Ash Avenue, Suite G-1
Tempe, Arizona 85282
Voice: 602-839-2800 Fax: 602-839-2828

HSI GEOTRANS

Site Map

Project No: N386-119

Client: UIC

Site: WOC

Borehole No: MW-106m

Start Date/Time: 11/12/97 14:00

End Date/Time: 11/13/97 10:15

Logged By: David Broermann

Drilling Method: Mud Rotary

Borehole Diameter: 6 1/2 inches

Angle from Vertical:

Datum:

Surface Conditions: Granite Gravel

Depth	Sample Number	Sample Type (SS=Split Spoon, C=Cuttings, O=Other)	Blow Counts/6"	Inches Driven	Inches Recovered	PID (ppm)	Lithology	Description and Comments
255–260	27	C						**SILTY SAND (SM)** Light brown, fine to medium sand, silt, trace coarse sand
260–265	28	C						**SILTY SAND (SM)** Light brown, fine to medium sand, silt, trace coarse sand, angular to rounded sand
265–270	29	C						**SILTY SAND (SM)** Light brown, fine to medium sand, silt, angular to rounded sand
270–275	30	C						**SILTY SAND SAND(SM)** Light brown, fine to medium sand, trace clay, trace coarse sand
275–280	31	C						**SILTY SAND SANDY SILT (SM-ML)** Brown, fine to medium sand, silt, trace clay
280–300								

Drilling Contractor: Stewart Brothers

Checked By:

Date Checked:

HSI GeoTrans, Inc.
4665 South Ash Avenue, Suite G-1
Tempe, Arizona 85282
Voice: 602-839-2800 Fax: 602-839-2828

HSI GEOTRANS

Site Map

Project No: N386-119

Client: UIC

Site: WOC

Borehole No: MW-106m

Start Date/Time: 11/12/97 14:00

End Date/Time: 11/13/97 10:15

Logged By: David Broermann

Drilling Method: Mud Rotary

Borehole Diameter: 6 1/2 inches

Angle from Vertical:

Datum:

Surface Conditions: Granite Gravel

Depth	Sample Number	Sample Type (SS=Split Spoon, C=Cuttings, O=Other)	Blow Counts/6"	Inches Driven	Inches Recovered	PID (ppm)	Lithology	Description and Comments
305	32	C						**SANDY SILT (ML)** Brown, fine sand, silt, trace clay, trace medium sand
310								
315	33	C						**SANDY SILT (ML)** Brown, silt, fine sand, trace clay
320	34	C						**SANDY SILT SILTY SAND (ML-SM)** Brown, silt, fine sand, trace clay (Some sand may be wash matterial. Sample was collected after TD, and drillers were washing hole)
325								Total Depth 325'
330								
335								
340								
345								
350								

Drilling Contractor: Stewart Brothers

Checked By:

Date Checked:

Sheet: 7 of 7

HSI GeoTrans, Inc.
4665 South Ash Avenue, Suite G-1
Tempe, Arizona 85282
Voice: 602-839-2800 Fax: 602-839-2828

N386-119

☐ File MW106M

ELECTRIC LOGS FOR MW-106M

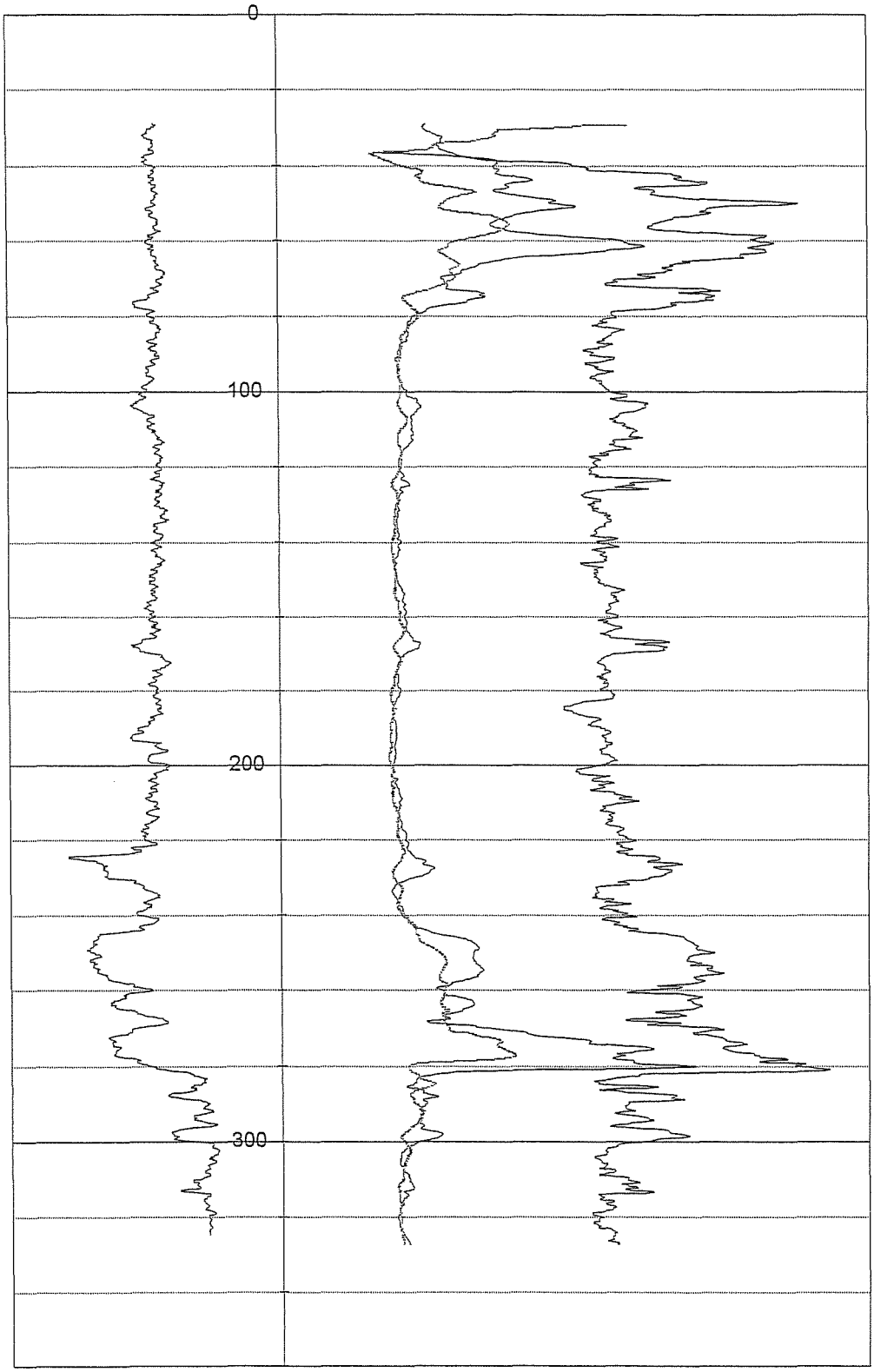

Self Potential **Resistivity and Single Point Resistance**

MONITOR WELL CONSTRUCTION SUMMARY

Well No. MW-106m
Boring No. X-Ref:
Elevation Ground Level:
Top of Casing: 1107.38

Map Coords: 5313 N, 3285 E
Job Number: N386-119

Drilling Summary:		Construction Time Log: **Start** 11/12/97 **Finish** 11/17/97				
Total Depth	360 feet		Date	Time	Date	Time
Borehole Diameter	7 7/8 inches	Drilling (6 1/2")	11/12/97	14:00	11/13/97	10:15
Casing Stick-Up	0	(12 1/4")	11/13/97	13:15	11/14/97	15:15
Driller	Stewart Brothers Drilling Co.	(7 7/8")	11/18/97	10:00	11/18/97	10:30
Rig	Gardner Denver 1500					
Bit(s)	0-325 feet: 6 1/2" tricone 0-230 feet: 12 1/4" tricone 0-288 feet: 7 7/8" tricone	Geophys. Logging	11/13/97	11:15	11/13/97	13:15
Drilling Fluid	Bentonite mud	Casing: 8"LCS	11/17/97	10:30	11/17/97	15:00
Protective Casing	None	Casing: 4"PVC	11/18/97	12:15	11/18/97	14:00
Comments: 6 ½ inch pilot hole was drilled from 0 to 325 feet. The hole						
was geophysically logged, and then reamed using a 12 1/4 inch bit to						
230 feet. Eight inch steel casing was then set to 230 feet and grouted		Bentonite	11/19/97	9:15	11/19/97	9:45
in place. A 7 7/8 inch bit was then used to drill to a depth of 288 feet.		Sand Pack:	11/18/97	14:30	11/18/97	16:30
A steel donut was welded on to the 4" steel casing to allow placement		Cementing:	11/17/97	14:30	11/17/97	16:00
of an inner casing grout seal at the surface.		Development:	11/19/97	9:45	1/29/97	15:40

Well Design & Specifications

Basis: Geologic Log x Geophysical Log x

Casing String(s): C = Casing S = Screen

Well Development: The well was bailed by the driller for approximately 4.5 hours. The well was also developed using a 4" submersible pump. The pump was raised and lowered to surge the well as it was purged.

Depth (ft)	String (C1, S1, etc.)	Elevation (ft)
0 to 230	C1 - 8" LCS	
0 to10	C2 - 4" LCS	
10 to 245	C3 - 4" PVC	
245 to 285	S1 - 4" PVC	
to		

A ½ hP Goulds submersible pump ws set at a depth of 240 feet.

An Aardvark packer was set at a depth of 235 feet.

Casing: C1	8" low carbon steel
C2	4" low carbon steel
C3	4" Schedule 40 PVC blank casing
Screen: S1	4" Schedule 40 PVC factory slotted 0.020"
S2	
Filter Pack:	230'-285': 8-12 Colorado silica sand.
Grout Seal:	0-235': neat cement with 3.5% bentonite
Seal:	210'-230' Bentonite pellets

Stabilization Test Data:

Time	pH	Spec. Cond. µs/m	Temp (C)
15:12	8.21	1261	23.5
15:27	8.15	1162	22.9
15:32	8.08	12.25	22.2
15.35	8.11	1140	20.8

Site Name: West Osborn Complex

Location: Issac's Pueblo del Sol Middle School 3449 N. 39th Avenue (east of SRP well)

Supervised By: David Broermann

Date: 3/26/98

STATE OF ARIZONA
DEPARTMENT OF WATER RESOURCES
GROUNDWATER MANAGEMENT SUPPORT SECTION
MAIL TO: P.O. BOX 458, PHOENIX, ARIZONA 85001-0458
500 NORTH THIRD STREET, PHOENIX, ARIZONA 85004-3903
PHONE (602) 417-2470 FAX (602) 417-2422

RECEIVED SEP 18 1997 GROUNDWATER MGT

NOTICE OF INTENTION TO DRILL MONITOR/PIEZOMETER WELL

PLEASE READ GENERAL INSTRUCTIONS ON REVERSE SIDE OF THIS FORM BEFORE COMPLETING.

Section §45-596, Arizona Revised Statues provide: Prior to drilling a monitor or piezometer well, a Notice of Intention to Drill shall be filed with the Department.

1 Well/Land Location:

2N (Township) 2E (Range) 27 (Section)

NW ¼ (10 Acre) SW ¼ (40 Acre) NE ¼ (160 Acre)

2. Position location of the well on the land:

Latitude 33 o 29 ' 53 "

Longitude 112 o 08 ' 32 "

3. County: Maricopa

4. Owner of the land of wellsite:

Issac School District Number 5
Name
3348 West McDowell Road
Address
Phoenix (City) Az. (Sate) 85009 (Zip)

Telephone Number 256-5669

5. Lessee of the land of wellsite:

NA
Name

Address

City Sate Zip

Telephone Number

6. Owner of well:

United Industrial Corporation
Name
4665 South Ash
Address
Tempe (City) Az (State) 85282 (Zip)

Phone Number (602) 839-2800

7. Consulting firm:

HSI GeoTrans, Inc.
Name
David Broermann
Contact Person
(602) 839-2800
Phone Number

8. Purpose of well drilled pursuant to this notice:

Monitor XXXXXX
Piezometer

9. If for deepening or modifying, list well registration number:

55-

FOR DEPARTMENT USE ONLY

File No. A(9-2)27ACB
Filed 9-18-97 By
Input By

DUPLICATE
Mailed 10/7/97 By
Registration 55-604731
AMA/INA PHX
W/S 07 S/B 04

10. Will this proposed well be associated with a permit: Yes ___ No XX
If yes, Permit No.

11. Construction will start:

September (Month) 21 (Day) 1997 (Year)

12. Period well will remain in use:

10 **Month/Years**

13. For monitoring wells, is pump equipment to be installed?

Yes XXXX No

(a) If yes, design pump capacity:

10 - 15 GPM

(b) What use will be made of the water:

Sampled and disposed

14. Drilling Firm:

Stewart Brothers Drilling Co.
Name

P.O. Box 2067
Address

Milans (City) NM (State) 87021 (Zip)

1-505-287-2986
Telephone Number

314
DWR License Number

A-4
ROC License Category

15. Proposed method of abandonment of well after project is completed: In accordance with A.A.C. R12-15-811, pursuant to R12-15-816

16. Is this well to monitor existing contamination? _____ **Potential contamination** XX **.Please explain:** Monitor wells will monitor potential-existing contamination previously identified in other monitor wells.

I state that this Notice is filed in compliance with Rule A.A.C. R12-15-809 and R12-15-816(F), and is complete and correct to the best of my knowledge and belief and that I understand the limitations and conditions set forth on the reverse side of this form.

ARTHUR ORTIZ, JR. — **Typed or Printed Name**

Signature [X] Land Owner [ ] Lessee of Wellsite — Contingent on Board approval

8/22/97 — **Date**

17. If construction plans have been coordinated with Arizona Department of Environmental Quality, who is the agency contact? Ms. Anna Vargus

If construction plans have been coordinated with Arizona Department of Water Resources, who is the agency contact? None

. WELL CONSTRUCTION PLAN:

a) Drilling method (mud rotary, hollow-stem auger, etc.) Mud Rotary

b) Borehole diameters: 12 inches from 0 feet to 250 feet.
7 7/8 inches from 250 feet to 300 feet.

c) Casing materials (PVC, steel, hollow-stem auger, etc.)

material Schedule 40 low carbon steel diameter 8 inches from 0 feet to 250 feet.
material Schedule 40 PVC diameter 4 inches from 0 feet to 260 feet.

d) Method of sealing at reductions grout seal

e) Annular seal materials (cement, grout, etc.); method of placement (tremied, circulated):

material cement grout method tremied from 0 feet to 250 feet.
material bentonite method tremied from 250 feet to 253 feet.

f) Filter packs (state material):
material silica sand from 253 feet to 300 feet.
material from feet to feet.

g) Perforation or screen specification:

type 4-inch, schedule 40 PVC 0.010" slot from 260 feet to 300 feet.
type from feet to feet.

h) Method of well development (bail, air lift, surge) Air-lift, jet, surge and pump

i) Will surface or conductor casing extend above grade? Yes ____ No XXX

. Include detailed construction diagram showing expected water depth in feet below land surface, and details of vault, if specified.

GENERAL INSTRUCTION

1. Please submit two original notices, with original signatures, and check or money order (no cash) in the amount of $ 10.00, to P.O. Box 458, Phoenix, Arizona 85001-0458 or hand deliver to 500 North Third Street, Phoenix, Arizona 85004-3903.

CONDITIONS

1. If an individual other than the land owner or lessee, signs this notice, an original letter of authorization from the land owner/lessee, stating that the individual has permission to sign this specific Notice on their behalf, shall accompany the Notice of Intention to Drill a Monitor/Piezometer Well form.

2. Construction and abandonment standards for all wells shall be in accordance with A.A.C. R12-15-811 and R12-15-816.

3. Drilling of the well shall be completed within one year after the date of Notice.

4. A Well Driller Report is required within thirty days of completion of drilling. A Completion Report is required to be filed with the Department within thirty days after installation of pump equipment for monitor wells.

5. Pump equipment may not be installed on a well drilled for piezometer purposes. If a monitor will is pumped, pumping is limited to the maximum amount required for monitor purposes, but in no case may exceed 35 gallons per minute and an annual volume of 10 acre feet total.

6. A.A.C. Rule R12-15-811.H.2, requires that: "A monitor well shall be identified as such on the vault cover or at the top of the steel casing. Identification information will include well registration number."

Special construction standards, required pursuant to A.A.C. Rule R12-15-821: ____

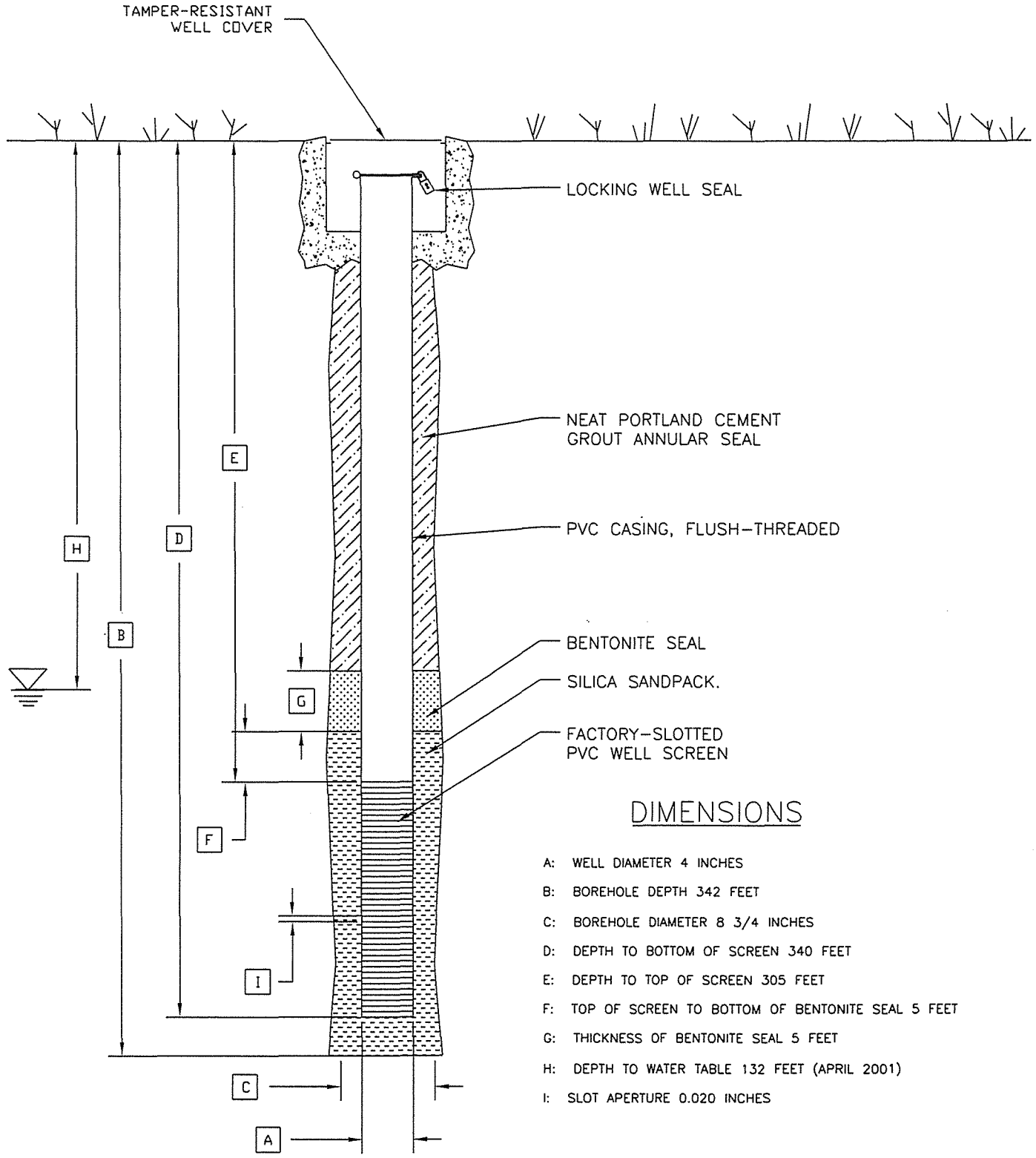

DIMENSIONS

A: WELL DIAMETER 4 INCHES

B: BOREHOLE DEPTH 342 FEET

C: BOREHOLE DIAMETER 8 3/4 INCHES

D: DEPTH TO BOTTOM OF SCREEN 340 FEET

E: DEPTH TO TOP OF SCREEN 305 FEET

F: TOP OF SCREEN TO BOTTOM OF BENTONITE SEAL 5 FEET

G: THICKNESS OF BENTONITE SEAL 5 FEET

H: DEPTH TO WATER TABLE 132 FEET (APRIL 2001)

I: SLOT APERTURE 0.020 INCHES

* NOT TO SCALE

NOTE: DEDICATED PUMP INSTALLED IN WELL ON 4-4-01. PUMP INTAKE, SET AT DEPTH OF 335' BGS.

TITLE: MONITOR WELL MW-107M DIAGRAM
UNITED INDUSTRIAL CORPORATION

LOCATION: WEST OSBORN COMPLEX

GeoTrans, Inc. A TETRA TECH COMPANY

CHECKED	JWR
DRAFTED	DS
PROJECT	P579-503
DATE	5/15/01

Site Map	Project No: P579-503 Client: UIC Site: WOC	Borehole No: MW-107m Start Date/Time: 3/5/01 11:00 End Date/Time: 3/12/01 11:30 Logged By: David Broermann
	Drilling Method: Mud Rotary Borehole Diameter: 8 3/4 inches	Angle from Vertical: Datum:
	Surface Conditions: Asphalt	

Depth	Sample Number	Sample Type (SS=Split Spoon, C=Cuttings, O=Other)	Blow Counts/6"	Inches Driven	Inches Recovered	PID (ppm)	Lithology	Description and Comments
0								Ground Surface
5	1	C						**SILTY SAND (SM)** Brown, moist, very fine to coarse sand, 60%-70% sand, 30%-40% silt
10								**Sandy Gravel-Gravelly Sand (GM)** Brown, moist, very fine to coarse sand, 50% gravel, 50% sand, some silt
15	2	C						**SILTY SAND (SM)** Brown, moist, very fine to coarse sand (60%), silt (40%)
20								
25	3	C						**SILTY SAND (SM)** Brown, very fine to coarse sand, silt, trace clay
30								
35	4	C						**SANDY SILTY GRAVEL (GM)** Brown, very fine to coarse sand, 50%-60% gravel, angular and rounded
40								
45	5	C						**SILTY CLAYEY GRAVELLY SAND (GM-GC)** Brown, 30% silt and clays, 30% gravel, 40% sand
50								

Drilling Contractor: THF Drilling
Checked By: D Broermann
Date Checked: 5/7/01

GeoTrans, Inc.
4665 South Ash Avenue, Suite G-1
Tempe, Arizona 85282
Voice: 480-839-2800 Fax: 480-839-2828

Site Map	**Project No:** P579-503 **Client:** UIC **Site:** WOC	**Borehole No: MW-107m** **Start Date/Time:** 3/5/01 11:00 **End Date/Time:** 3/12/01 11:30 **Logged By:** David Broermann
	Drilling Method: Mud Rotary **Borehole Diameter:** 8 3/4 inches	**Angle from Vertical:** **Datum:**
	Surface Conditions: Asphalt	

Depth	Sample Number	Sample Type (SS=Split Spoon, C=Cuttings, O=Other)	Blow Counts/6"	Inches Driven	Inches Recovered	PID (ppm)	Lithology	Description and Comments
55–60	6	C						**SANDY SILT and CLAY (ML-CL)** Brown, fine to coarse sand 30%-40%, silt and clay 60%-70%
65–70	7	C						**SANDY SILT and CLAY (ML-CL)** Brown, fine to coarse sand 30%-40%, silt and clay 60%-70%
75–80	8	C						**SILTY CLAYEY SAND (SM-SC)** Brown, very fine to medium sand, some coarse sand, rounded to angular sand
85–90	9	C						**SANDY SILT and CLAY (SM-CL)** Light brown, very fine to coarse sand, silt and clay
95–100	10	C						**SILTY SAND some Clay (SM)** Brown-light brown, very fine to medium sand, some coarse sand, silt and clay (30-40%), sand (60-70%)

Drilling Contractor: THF Drilling
Checked By: D Broermann
Date Checked: 5/7/01

GeoTrans, Inc.
4665 South Ash Avenue, Suite G-1
Tempe, Arizona 85282
Voice: 480-839-2800 Fax: 480-839-2828

Site Map	Project No: P579-503 Client: UIC Site: WOC	Borehole No: MW-107m Start Date/Time: 3/5/01 11:00 End Date/Time: 3/12/01 11:30 Logged By: David Broermann
	Drilling Method: Mud Rotary Borehole Diameter: 8 3/4 inches	Angle from Vertical: Datum:
	Surface Conditions: Asphalt	

Depth	Sample Number	Sample Type (SS=Split Spoon, C=Cuttings, O=Other)	Blow Counts/6"	Inches Driven	Inches Recovered	PID (ppm)	Lithology	Description and Comments
105	11	C						**SILTY SAND some Clay (SM)** Brown-light brown, very fine to medium sand, some coarse sand, silt and clay (30-40%), sand (60-70%)
110 115	12	C						**SILTY SAND some Clay (SM)** Brown-light brown, very fine to medium sand, some coarse sand, silt and clay (30-40%), sand (60-70%)
120 125	13	C						**CLAYEY SANDY GRAVEL (GC)** Brown, very fine to medium sand, clay, gravel (Clays thickened drilling muds chips of clay, sand and gravels were circulated out of bore hole)
130 135	14	C						**SILTY CLAYEY SAND (SM-SC)** Brown, very fine to medium sand, trace coarse sand, 70% sand with silt and clay Gravel zone from approximately 135 to 142 feet
140 145	15	C						**SILTY CLAYEY SAND (SM-SC)** Brown, very fine to medium sand, some to 20% coarse sand, total 70% sand with silt and clay
150								

Drilling Contractor: THF Drilling
Checked By: D Broermann
Date Checked: 5/7/01

GeoTrans, Inc.
4665 South Ash Avenue, Suite G-1
Tempe, Arizona 85282
Voice: 480-839-2800 Fax: 480-839-2828

Site Map	**Project No:** P579-503 **Client:** UIC **Site:** WOC	**Borehole No: MW-107m** **Start Date/Time:** 3/5/01 11:00 **End Date/Time:** 3/12/01 11:30 **Logged By:** David Broermann
	Drilling Method: Mud Rotary **Borehole Diameter:** 8 3/4 inches	**Angle from Vertical:** **Datum:**
	Surface Conditions: Asphalt	

Depth	Sample Number	Sample Type (SS=Split Spoon, C=Cuttings, O=Other)	Blow Counts/6"	Inches Driven	Inches Recovered	PID (ppm)	Lithology	Description and Comments
155	16	C						**SILTY SAND (SM)** Brown, very fine to coarse sand with silt, 40% silt, 60% sand
160–165	17	C						**CLAYEY SAND- SANDY CLAY (SC)** Brown, very fine to medium sand, 50%-50% sand and clay (Sand content high in drilling mud)
170–175	18	C						**SANDY CLAY (CL-SC)** Light brown, very fine to medium sand, clay, 40% sand, 60% clay (High content of sand floating out in drilling mud CL-SC)
180–185	19	C						**SANDY CLAY (CL-SC)** Light brown, very fine to medium sand, clay, 40% sand, 60% clay
190–195	21	C						**SANDY CLAY (CL-SC)** Light brown, very fine to medium sand, clay, 40% sand, 60% clay
200								

Drilling Contractor: THF Drilling
Checked By: D Broermann
Date Checked: 5/7/01

GeoTrans, Inc.
4665 South Ash Avenue, Suite G-1
Tempe, Arizona 85282
Voice: 480-839-2800 Fax: 480-839-2828

Site Map	Project No: P579-503 Client: UIC Site: WOC	Borehole No: MW-107m Start Date/Time: 3/5/01 11:00 End Date/Time: 3/12/01 11:30 Logged By: David Broermann
	Drilling Method: Mud Rotary Borehole Diameter: 8 3/4 inches	Angle from Vertical: Datum:
	Surface Conditions: Asphalt	

Depth	Sample Number	Sample Type (SS=Split Spoon, C=Cuttings, O=Other)	Blow Counts/6"	Inches Driven	Inches Recovered	PID (ppm)	Lithology	Description and Comments
205–210	22	C						**SANDY CLAY (CL)** Light brown, very fine to medium sand, clay, 40% sand, 60% clay
215–220	23	C						**SANDY CLAY (CL)** Light brown, very fine to medium sand, clay, 40% sand, 60% clay
225–230	24	C						**SANDY CLAY-CLAYEY SAND (CL-SC)** Brown, very fine sand to coarse sand, clay (Inter-bedded sand and gravel with clay 40%-60% sand and gravel)
235–240	25	C						**SANDY CLAY (CL)** Brown, very fine to coarse sand, 70% clay, 30% sand
245–250	26	C						**SANDY CLAY (CL)** Brown, very fine to coarse sand, 70% clay, 30% sand

Drilling Contractor: THF Drilling
Checked By: D Broermann
Date Checked: 5/7/01

GeoTrans, Inc.
4665 South Ash Avenue, Suite G-1
Tempe, Arizona 85282
Voice: 480-839-2800 Fax: 480-839-2828

Site Map	**Project No:** P579-503 **Client:** UIC **Site:** WOC	**Borehole No: MW-107m** **Start Date/Time:** 3/5/01 11:00 **End Date/Time:** 3/12/01 11:30 **Logged By:** David Broermann
	Drilling Method: Mud Rotary **Borehole Diameter:** 8 3/4 inches	**Angle from Vertical:** **Datum:**
	Surface Conditions: Asphalt	

Depth	Sample Characteristics						Lithologic Characteristics	
	Sample Number	Sample Type (SS=Split Spoon, C=Cuttings, O=Other)	Blow Counts/6"	Inches Driven	Inches Recovered	PID (ppm)	Lithology	Description and Comments
255–260	27	C						**SANDY CLAY (CL)** Brown, very fine to coarse sand, 60% clay, 40% sand
265–270	28	C						**SANDY CLAY- CLAYEY SAND (SC-CL)** Brown, very fine to medium sand, 50% clay, 50% sand
275–280	29	C						**CLAYEY SILTY SAND (SC-CL)** Brown, very fine to coarse sand, 30% clay and silt, 70% sand (Possible gravels)
285–290	30	C						**SANDY CLAY-CLAYEY SAND (SC)** Brown, very fine to medium sand, 50% sand, 50 clay
295–300	31	C						**CLAYEY SAND (SC)** Brown, very fine to coarse sand, 30% clay, 70% sand

Drilling Contractor: THF Drilling
Checked By: D Broermann
Date Checked: 5/7/01

GeoTrans, Inc.
4665 South Ash Avenue, Suite G-1
Tempe, Arizona 85282
Voice: 480-839-2800 Fax: 480-839-2828

Site Map	**Project No:** P579-503 **Client:** UIC **Site:** WOC	**Borehole No: MW-107m** **Start Date/Time:** 3/5/01 11:00 **End Date/Time:** 3/12/01 11:30 **Logged By:** David Broermann
	Drilling Method: Mud Rotary **Borehole Diameter:** 8 3/4 inches	**Angle from Vertical:** **Datum:**
	Surface Conditions: Asphalt	

Depth	Sample Characteristics						Lithologic Characteristics	
	Sample Number	Sample Type (SS=Split Spoon, C=Cuttings, O=Other)	Blow Counts/6"	Inches Driven	Inches Recovered	PID (ppm)	Lithology	Description and Comments
305–310	32	C						**CLAYEY SAND (SC)** Brown, very fine to coarse sand, 30% clay, 70% sand
310–315	33	C						**CLAYEY SAND (SC)** Brown, very fine to coarse sand 60%, light brown clay 40%
315–320	34	C						**CLAY with sand and gravel (CL)** Brown, very fine to coarse sand, clay, 10%-20% sand and gravel (Clay inter-bedded with sand and gravels)
320–325	35	C						**SANDY CLAY with gravel (CL)** Brown, very fine to coarse sand, clay, 20% sand, 10% gravel (Clay inter-bedded with sand and gravels)
325–330	36	C						**SILTY SAND and gravel (SM)** Brown, very fine to very coase sand, rounded to angular, 20% silt, 80% sand and gravel (Gravel zone with sand and silt)
330–350								

Drilling Contractor: THF Drilling
Checked By: D Broermann
Date Checked: 5/7/01

GeoTrans, Inc.
4665 South Ash Avenue, Suite G-1
Tempe, Arizona 85282
Voice: 480-839-2800 Fax: 480-839-2828

Site Map	**Project No:** P579-503 **Client:** UIC **Site:** WOC	**Borehole No: MW-107m** **Start Date/Time:** 3/5/01 11:00 **End Date/Time:** 3/12/01 11:30 **Logged By:** David Broermann
	Drilling Method: Mud Rotary **Borehole Diameter:** 8 3/4 inches	**Angle from Vertical:** **Datum:**
	Surface Conditions: Asphalt	

Depth	Sample Number	Sample Type (SS=Split Spoon, C=Cuttings, O=Other)	Blow Counts/6"	Inches Driven	Inches Recovered	PID (ppm)	Lithology	Description and Comments
355–360	37	C						**SILTY SAND and GRAVEL (SM-GM)** Brown, very fine to very coarse sand (30%-40%), gravel (40%-50%), silt (20%)
365–370	38	C						**SILTY SAND and GRAVEL (SM-GM)** Brown, very fine to very coarse sand (35%), gravel (35%), silt (30%)
375–380	39	C						**SILTY SAND and GRAVEL (SM-GM)** Brown, very fine to very coarse sand (35%), gravel (35%), silt (30%)
385–390	40	C						**SANDY CLAY and CLAYEY SAND (SC-CL)** Brown, very fine to coarse sand, clay and silt chips (Drilling mud contained high percent sand)
	41	C						**SANDY CLAY CLAYEY SAND (SC)** Brown, very fine to medium sand, clay, trace gravel (Drilling fluids contained a high content of sand, and cuttings from return also contained caliche chips.)
395–400								**SILTY SAND (SM)** Light brown, very fine sand and caliche (Very hard drilling from 395 to 400 feet, and drilling fluid loss occurred at 400 feet)

Drilling Contractor: THF Drilling
Checked By: D Broermann
Date Checked: 5/7/01

GeoTrans, Inc.
4665 South Ash Avenue, Suite G-1
Tempe, Arizona 85282
Voice: 480-839-2800 Fax: 480-839-2828

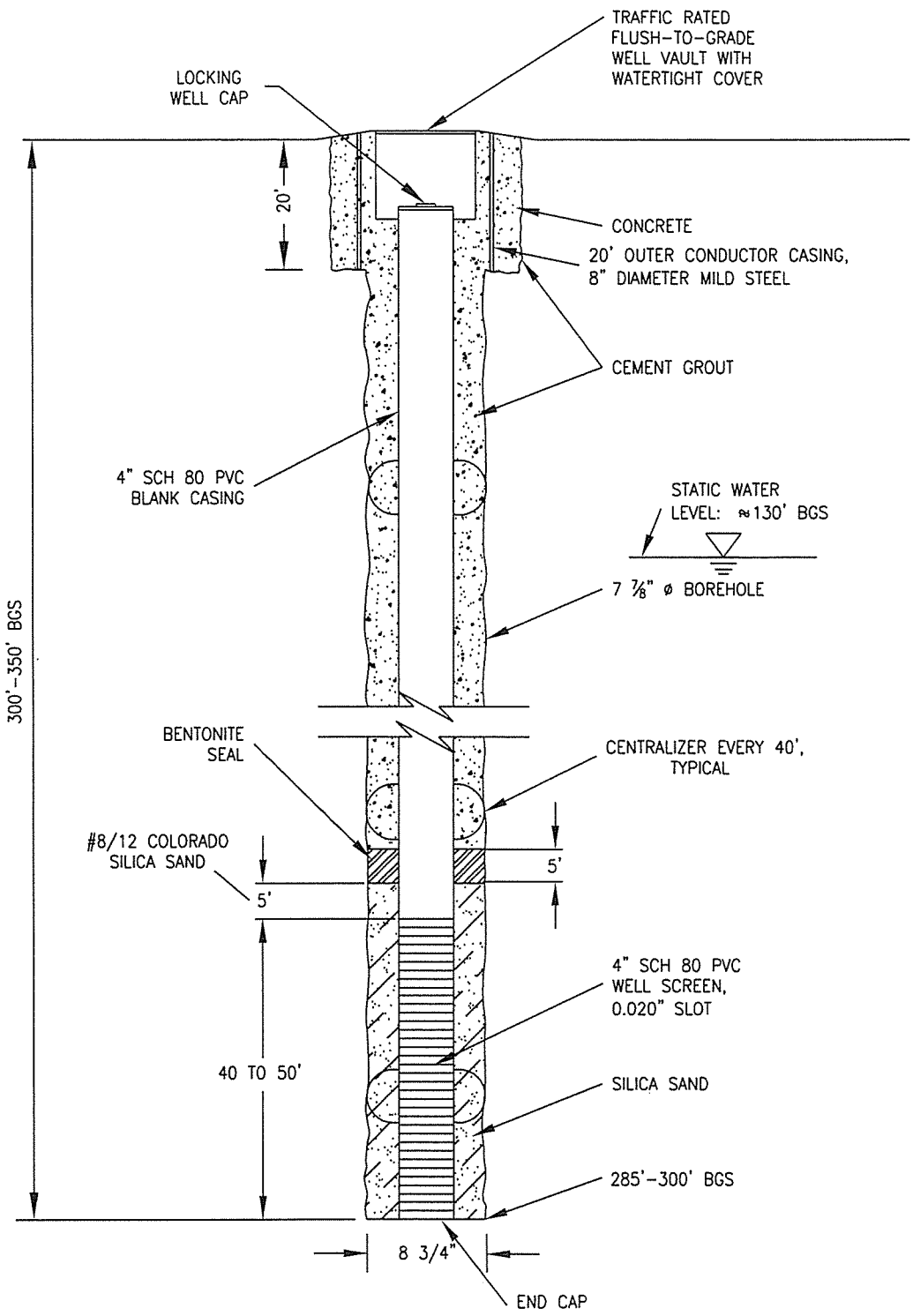

UNITED INDUSTRIAL CORPORATION

PROPOSED LSGS MONITOR WELL
MW-108M SCHEMATIC

GeoTrans, Inc.
A TETRA TECH COMPANY

CHECKED	JWR	FIGURE:
DRAFTED	DS	5
FILE	P579-503	
DATE	7/24/01	

Log of Borehole: MW-108M

Project No.: 2209.002

Project: UIC

Client: UIC

Lat/Lon: N33.4808 / W112.1665

Intersection 50th Dr and Verde Ln

Project Manager: J. Rackow

GeoTrans, Inc
4665 South Ash Ave, Suite G-1
Tempe, Arizona 85282

SUBSURFACE PROFILE				DRILLING INFO.				
Depth (ft / m)	Symbol	Description	Depth/Elev.	Rate (ft/min)	Time of Day	Fines %	Sand %	Well Completion Details
0 / 0		Ground Surface	1070.0					
		Sandy Silt ML; soft, brown inorganic silt with approximately 5% fine sand	0.0 / 1060.0		3/12 12:00	95	5	
5 / 5		***Gravelly Silt*** GM; soft, brown inorganic silt (60%); 2-5 inch diam gravel (30%); fine sand (10%)	10.0 / 1050.0		12:20	60	10	
10 / 10		***Silty Gravel*** GM; Gravel, sand, silt	20.0		3/13 12:40 / 13:00			
15 / 15			1020.0	> 1.5	13:08			
		Gravelly Clay GC; Sticky, firm clay with gravel and sand	50.0 / 1010.0		13:17			
20 / 20		***Clayey Sand*** SC; Clay and fine to coarse sand	60.0	1.5	13:28			
			992.0	6 2	13:45			
25 / 25		***Sand*** SM; fine to coarse sand with some fines	78.0	0.3	13:58			
30 / 30			970.0	0.3	14:07			
		Gravelly Clay GC; firm, sticky, brown clay with 1-inch diameter gravel	100.0 / 960.0	0.75	14:22			
35 / 35		***Sandy Clay*** SC; fine to med sand, 60% sticky, firm clay and silt	110.0	0.3	14:30 / 14:36	60	30	
40 / 40		***Silty Sand*** SM; fine to coarse sand, sl sticky silt (10-30%), occasional fine gravel (3-5%)	940.0 / 130.0	0.2	14:38 / 14:44	30	70	
45 / 45								

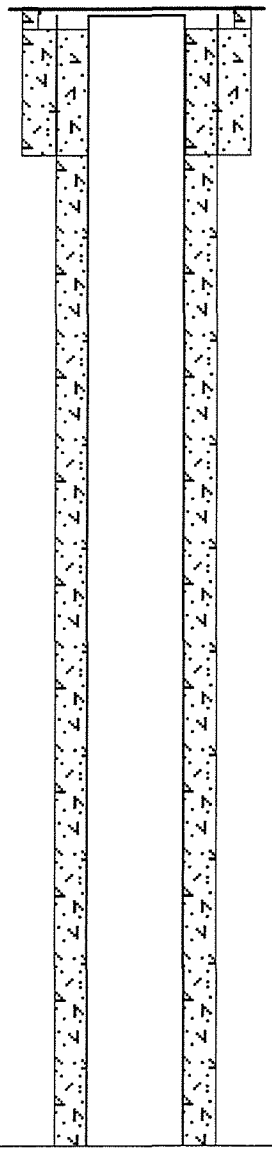

Drilled By: Stewart Bros

Hole Size: 7 7/8

Drill Method: Mud Rotary

Datum:

Drill Date: 3-12-02

Sheet: 1 of 3

Log of Borehole: MW-108M

Project No.: 2209.002

Project: UIC

Client: UIC

Lat/Lon: N33.4808 / W112.1665

Intersection 50th Dr and Verde Ln

Project Manager: J. Rackow

GeoTrans, Inc
4665 South Ash Ave, Suite G-1
Tempe, Arizona 85282

SUBSURFACE PROFILE				DRILLING INFO.				
Depth	Symbol	Description	Depth/Elev.	Rate (ft/min)	Time of Day	Fines %	Sand %	Well Completion Details
155								
160			910.0		14:47			
165 – 50		***Gravelly Silty Sand*** GM; fine to coarse sand (40%), fine gravel (30%), silt (30%)	160.0	0.3	14:55	30	40	
170								
175			890.0	0.2				
180 – 55		***Silty Sand*** SM; sand, fine to medium (70-80%), silt	180.0					
185			880.0	0.3				
190		***Clayey Sand*** SC; Sand, fine to med (60%), clay (30%), Silt and fine Gravel (10%)	190.0					
195 – 60				0.2	15:09	30	60	
200								
205								
210								
215 – 65								
220			850.0					
225		***Silty Sand*** SM; Sand (85%), fine to med. Silt (15%)	220.0			15	85	
230 – 70			840.0		15:28			
235		***Sandy Clay*** SC; Clay (70%), fine to med sand (30%)	230.0			70	30	
240				0.4				
245 – 75								
250				0.3	15:42			
255								
260				0.2				
265 – 80								
270					15:49			
275								
280 – 85								
285								
290			780.0	0.3	15:59			
295 – 90		***Sand*** SW; fine to med sand, some fines	290.0			90	10	
300				0.2				

Drilled By: Stewart Bros

Hole Size: 7 7/8

Drill Method: Mud Rotary

Datum:

Drill Date: 3-12-02

Sheet: 2 of 3

Log of Borehole: MW-108M

Project No.: 2209.002

Project: UIC

Client: UIC

Intersection 50th Dr and Verde Ln

Lat/Lon: N33.4808 / W112.1665

Project Manager: J. Rackow

GeoTrans, Inc
4665 South Ash Ave, Suite G-1
Tempe, Arizona 85282

SUBSURFACE PROFILE				DRILLING INFO.				
Depth	Symbol	Description	Depth/Elev.	Rate (ft/min)	Time of Day	Fines %	Sand %	Well Completion Details
305								
310								
315 – 96								
320					16:15			
325								
330 – 101			740.0	0.3				
335		***Sandy Gravel*** GM; gravel (40%); fine to med sand (50%), fines (10%)	330.0			10	50	
340			727.0	0.2	16:25			
345			343.0	0.5		0		
350 – 106		***Gravel*** ML; Gravel. Slower drilling rates	720.0	0.3	3/14 08:45			
355		***Silty Clayey Sand*** ML; fine to med sand (50%); silt (30%), clay, brown, wet and sticky	350.0			50	50	
360			710.0					
365 – 111			360.0			70	10	
370		***Silty Clay*** SC; sticky, firm clay and silt (80%), fine sand (10%)			09:00			
375								
380 – 116		***Sandy Silty Clay*** SC; clay, silt. fine to med sand, sticky, med firm.						
385								
390				0.2				
395 – 121								
400								
405								
410				0.3	9:26			
415 – 126								
420			650.0		9:30			
425			420.0					
430 – 131								
435								
440								
445 – 136								
450								

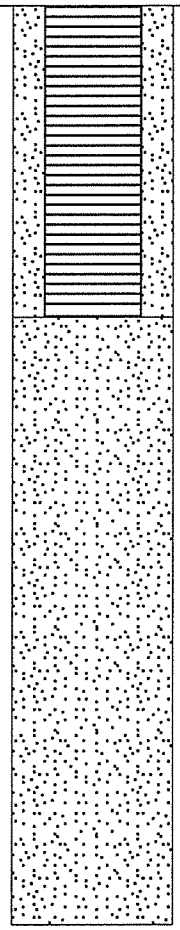

Drilled By: Stewart Bros

Drill Method: Mud Rotary

Drill Date: 3-12-02

Hole Size: 7 7/8

Datum:

Sheet: 3 of 3

MONITOR WELL CONSTRUCTION SUMMARY

Well No. MW-2M

Boring No. X-Ref:

Map Coords: 4456 N, 4538 E

Elevation Ground Level:

Job Number: 808708313

Top of Casing: 1106.46

Drilling Summary:		Construction Time Log: **Start** 10/8/96 **Finish** 10/14/96				
Total Depth	390 feet		Date	Time	Date	Time
Borehole Diameter	7 ⅞ inches	Drilling (6 1/2")	10/8/96	0800	10/9/96	1930
Casing Stick-Up	0	(12 1/4")	10/9/96	0830	10/9/96	1500
Driller	Stewart Brothers Drilling Co.	(7 ⅞")	10/14/96	0900	10/14/96	1030
Rig	Gardner Denver 1500					
Bit(s)	0-390 feet: 6 1/2" tricone 0-310 feet: 12 1/4" tricone 0-370 feet: 7 7/8" tricone	Geophys. Logging	10/9/96	1345	10/11/96	2100
Drilling Fluid	Bentonite mud and polymers	Casing: 8 ⅝"	10/11/96	0600	10/14/96	1300
Protective Casing	None	Casing: 4 ½"	10/14/96	1130	10/15/96	1630
Comments: 6 ½ inch pilot hole was drilled from 0 to 390 feet. The hole						
was logged and then reamed to 310 feet, using a 12 1/4-inch bit. Eight-						
inch steel casing was then set to 310 feet and grouted in place. A 7						
7/8 inch bit was then used to drill to a depth of 370 feet.		Sand Pack:				
		Cementing:	10/14/96	1630	10/14/96	1700
		Development:	10/14/96	1830	10/15/96	0900

Site Name: West Osborn Complex

Location: 3640 West Osborn Road May Industry, northwest side

Well Design & Specifications

Basis: Geologic Log x Geophysical Log x

Casing String(s): C = Casing S = Screen

Well Development:

Depth (ft)	String (C1, S1, etc.)	Elevation (ft)
0 to 310	C1- 8" LCS	
0 to 330	C2- 4.5" LCS	
330 to 370	S1 - 4.5" stainless steel	

Casing:	C1	8 5/8" Low carbon steel blank casing 0.188 wall
	C2	4.5" Low carbon steel blank casing 0.188 wall
Screen:	S1	4.5 " Stainless steel, 0.040" slot wire wrap
	S2	
Filter Pack:		322'-390': 8-12 Colorado silica sand.
Grout Seal:		0-316': neat cement with 3.5% bentonite; 0-310': neat
		cement with 3.5% bentonite on outside of 8 5/8" surface casing
Seal:		316'-322' #60 Colorado silica sand

Stabilization Test Data:

Time	pH	Spec. Cond. µs/m	Temp (C)

Pumped

Supervised By: David Broermann

Date:

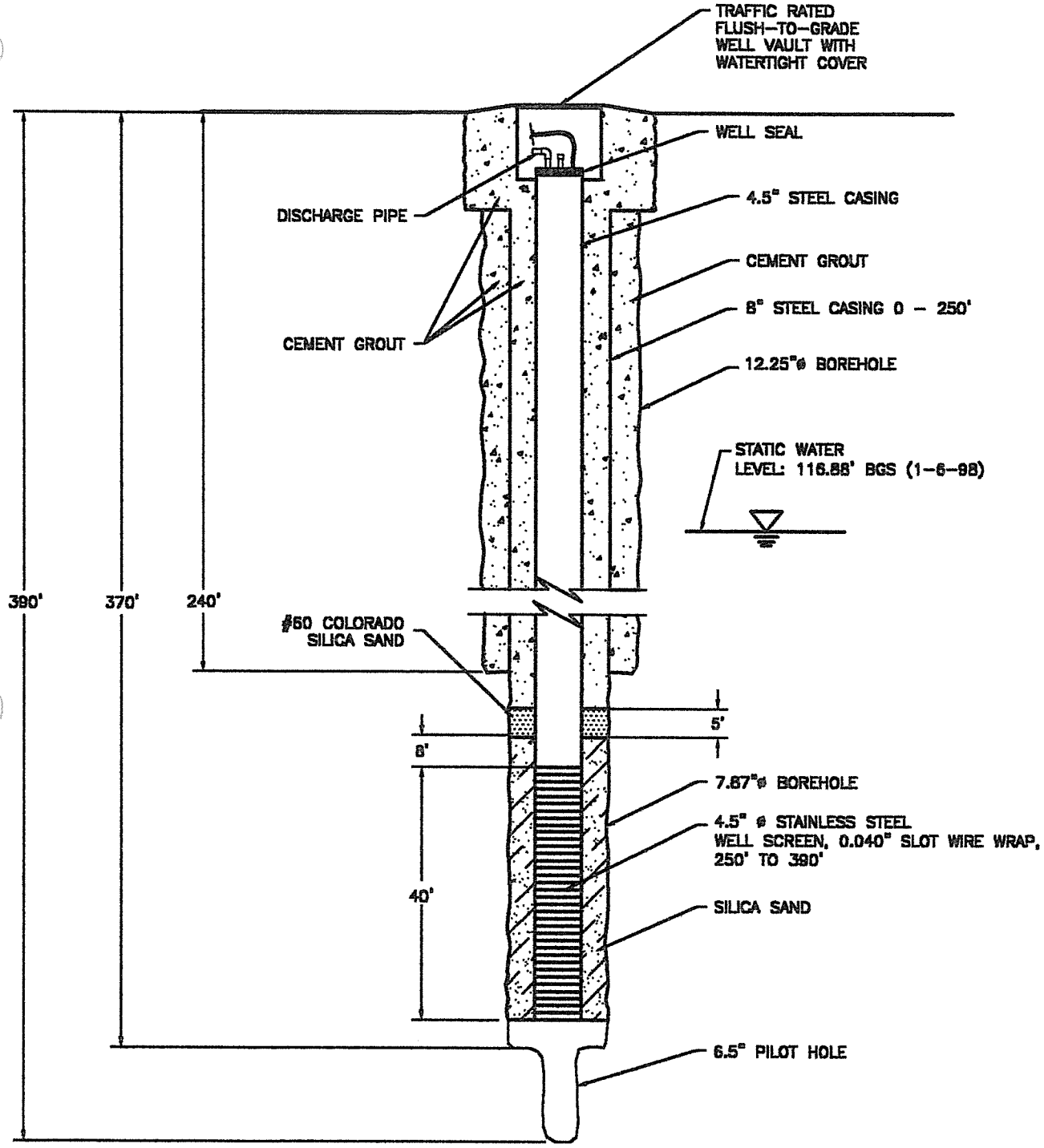

NOT TO SCALE

UNITED INDUSTRIAL CORPORATION	DATE: 7-27-98
INTERMEDIATE WELL MW-3M SECTION VIEW	DESIGNED:
	CHECKED:
	APPROVED:
	DRAWN: JDD
	PROJ.: N386-113
HSI GEOTRANS A Tetra Tech Company	

../RI-REPORT/WELL-003M.DWG

Southwest Geophysical Services, Inc.

COMPANY	GEOTRANS		
WELL ID	MW-108M		
FIELD	WCP		
COUNTY	MARICOPA	STATE	ARIZONA

TYPE OF LOG: E-LOG-GUARD

OTHER SERVICES
NAT. GAMMA
CALIPER
NEUTRON

LOCATION
A(2-2)28ccc

SEC 28 TWP 2N RGE 2E

PERMANENT DATUM		ELEVATION	K.B.
LOG MEAS. FROM	GROUND	ABOVE PERM. DATUM	D.F.
DRILLING MEAS. FROM			G.L.

DATE	3-14-02	TYPE FLUID IN HOLE	FRESH MUD
RUN No	1	SALINITY	
TYPE LOG	E-LOG	DENSITY	
DEPTH-DRILLER.	423 FT	LEVEL	23 ft
DEPTH-LOGGER	419 FT	MAX. REC. TEMP.	
BTM LOGGED INTERVAL	1434 FT		
TOP LOGGED INTERVAL	20 ft		
OPERATING RIG TIME			
RECORDED BY	K. MITCHELL		
WITNESSED BY	GEOTRANS		

RUN	BOREHOLE RECORD			CASING RECORD			
NO.	BIT	FROM	TO	SIZE	WGT.	FROM	TO
1	18" AUGER	SURFACE	20 FT	10 3/4"		SURFACE	20 FT
2	7 7/8"	40 FT	TOTAL DEPTH				

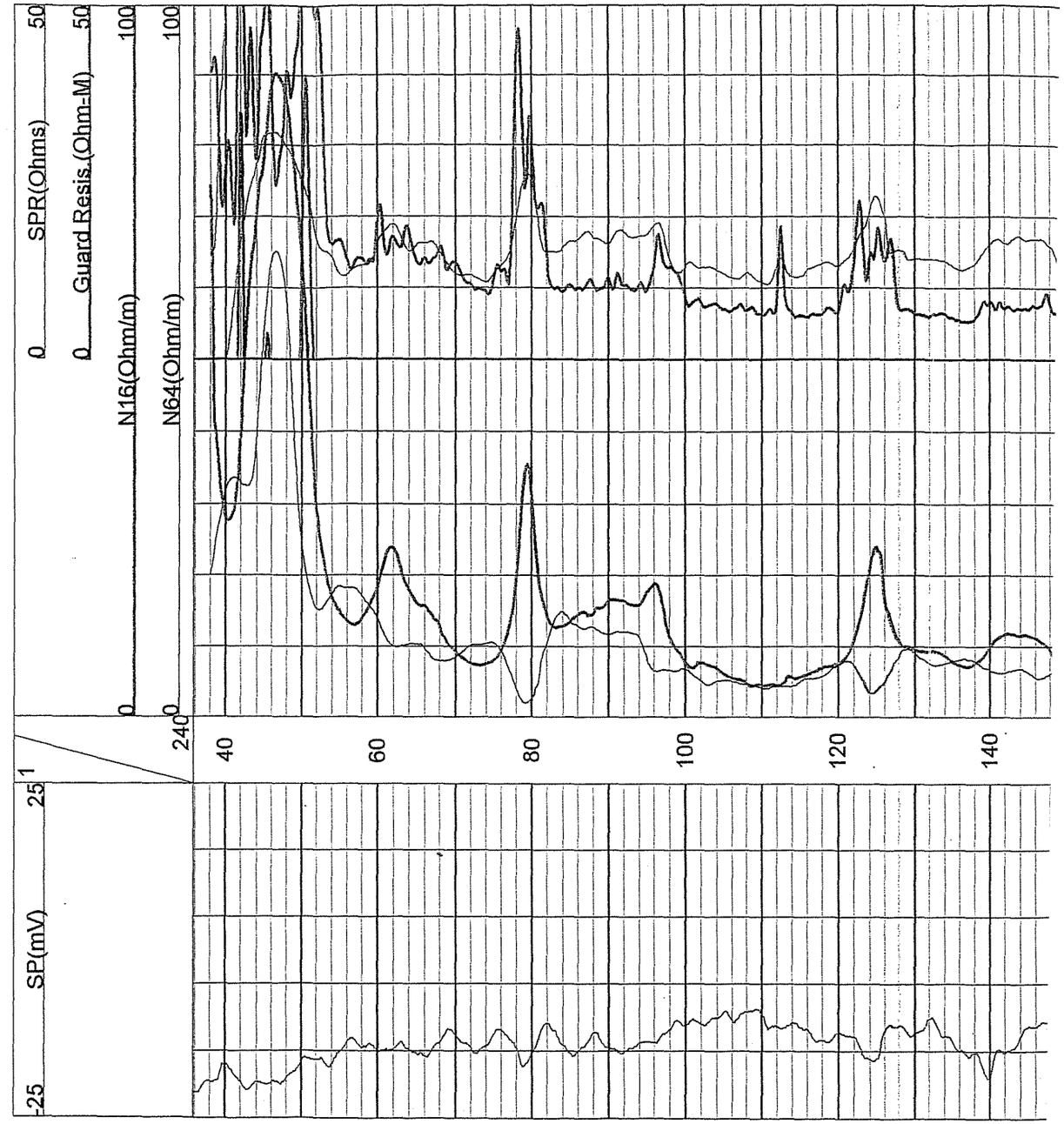

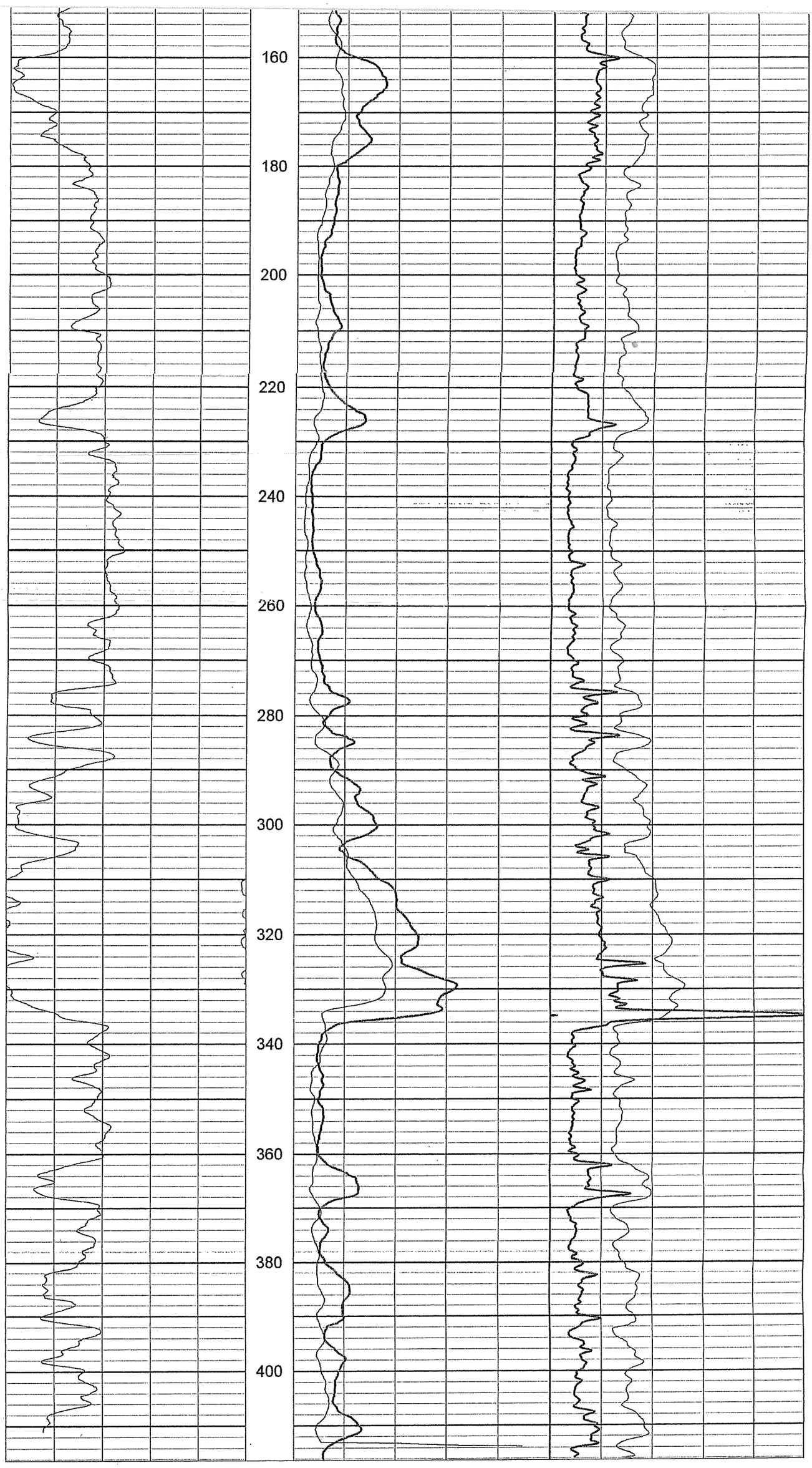
160
180
200
220
240
260
280
300
320
340
360
380
400

Southwest Geophysical Services, Inc.

COMPANY	GEOTRANS		
WELL ID	MW-108M		
FIELD	WCP		
COUNTY	MARICOPA	STATE	ARIZONA

TYPE OF LOG: Nat. Gamma - Neut. - Caliper OTHER SERVICES E-LOG

LOCATION
A(2-2)28ccc

SEC 28 TWP 2N RGE 2E

RMANENT DATUM		ELEVATION	K.B.
G MEAS. FROM	GROUND	ABOVE PERM. DATUM	D.F.
ILLING MEAS. FROM			G.L.

ATE	3-14-02	TYPE FLUID IN HOLE	FRESH MUD
N No	1	SALINITY	
PE LOG	GAMMA-CALIPER-NEUT.	DENSITY	
PTH-DRILLER	423 FT	LEVEL	23 ft
PTH-LOGGER	419 FT	MAX. REC. TEMP.	
M LOGGED INTERVAL	1434 FT		
P LOGGED INTERVAL	SURFACE		
ERATING RIG TIME			
CORDED BY	K. MITCHELL		
ITNESSED BY	GEOTRANS		

N	BOREHOLE RECORD			CASING RECORD			
.	BIT	FROM	TO	SIZE	WGT.	FROM	TO
	18" AUGER	SURFACE	20 FT	10 3/4"		SURFACE	20 FT
	7 7/8"	40 FT	TOTAL DEPTH				

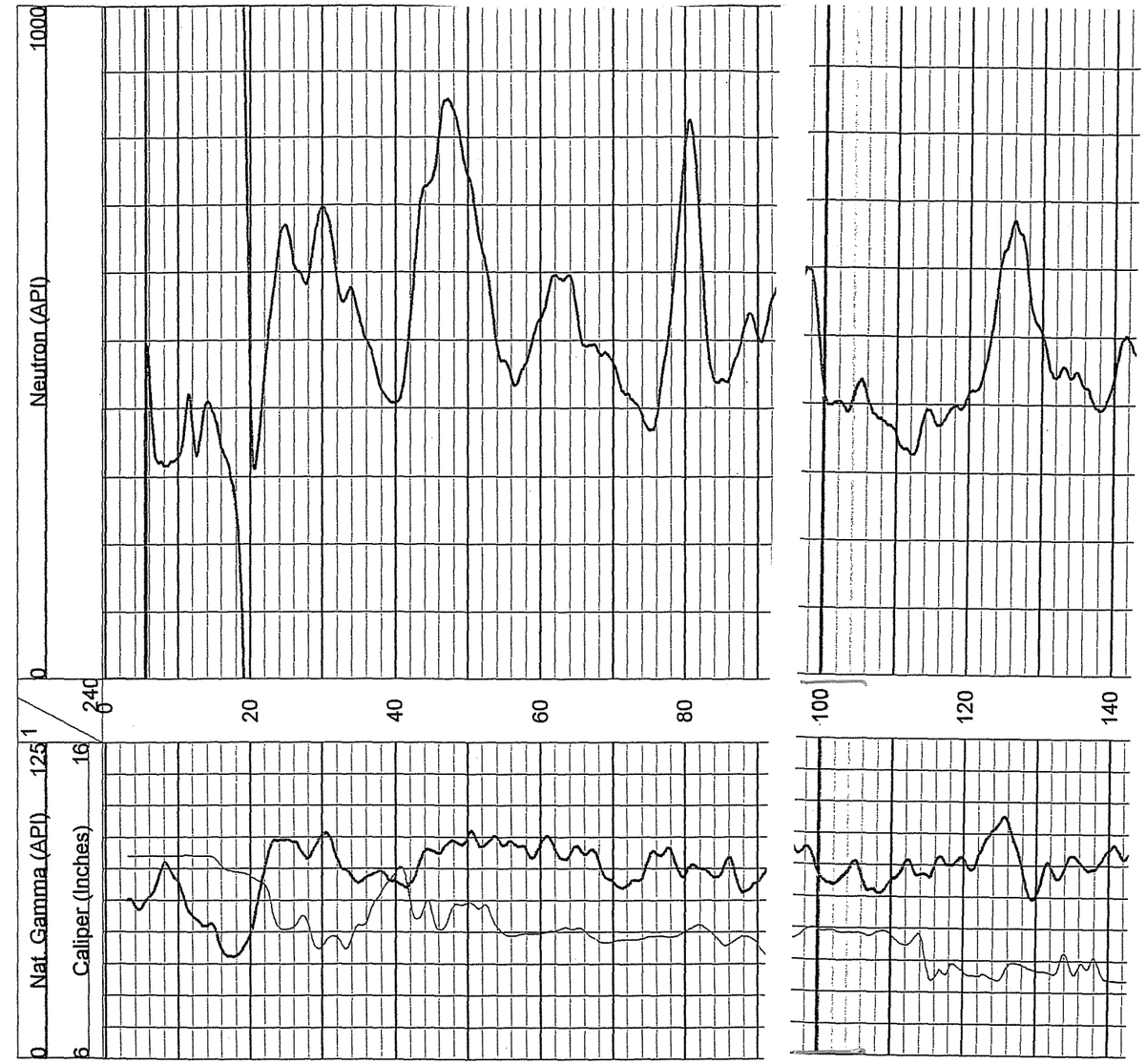

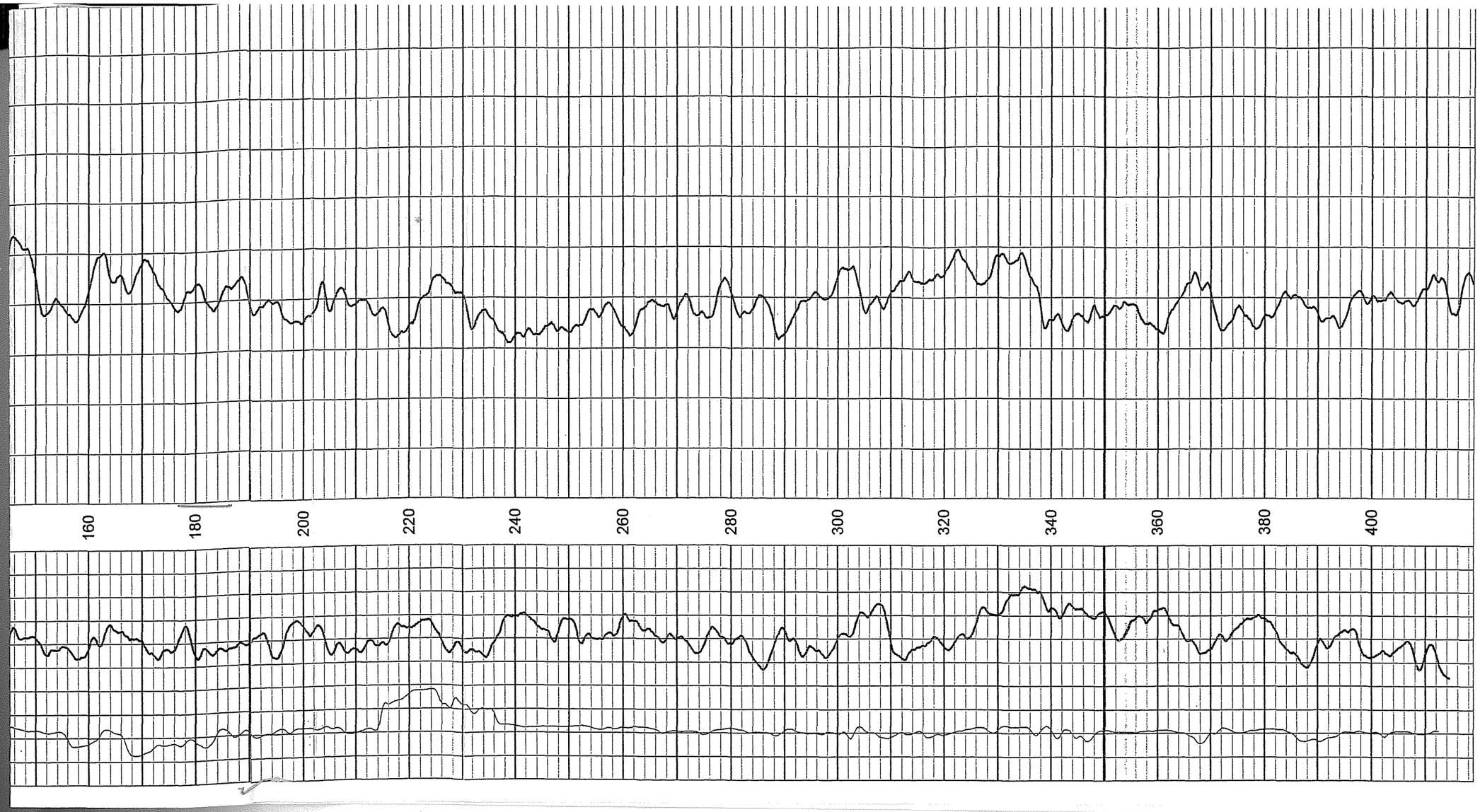
160
180
200
220
240
260
280
300
320
340
360
380
400

MW-3M

SOIL BOREHOLE LOG

SITE NAME AND LOCATION 808708313 UIC Phoenix, AZ	DRILLING METHOD: CME 75 HD with 8-inch OD Hollow Stem Augers	BORING NO. MW-3M	
	SAMPLING METHOD: "California modified" 18 and 24-inch split barrel samplers with 2x6-inch brass sleeves	SHEET 1 OF 5	
		DRILLING	
		START	FINISH
	WATER LEVEL: NA	TIME 1700	TIME 1000
	TIME: NA		
	DATE: NA	DATE 10/15/96	DATE 10/21/96
DATUM: APPROXIMATE ELEVATION:	CASING DEPTH: NA		

DRILLING RIG:

ANGLE: vertical HAMMER WEIGHT:

SAMPLE HAMMER TORQUE: FT.-LBS

SURFACE CONDITIONS:

DRILLING CONTRACTOR Stewart Brothers Drtilling

DEPTH IN FEET	Soil Graph	Inches Driven / Inches Recovered	Sample No / Sample Depth	BLOWS	TIME	SAMPLE NUMBER AND DESCRIPTION OF MATERIAL
0						
5						
						10': SILTY SAND (SM): brown (mixture), fine to coarse-grained sands, trace gravel from 1/4-1/2"; 20% silt, 80% sand
15						
20						20': SILTY SAND (SM): brown (mixture), fine to coarse-grained
25						
30	SM					30': CLAYEY SILTY SAND (SM): brown, fine to coarse-grained sand, some gravel, 30% silt and clay
35						
40						40': SAND some SILT (SM): brown, fine to coarse-grained sand; 10% silt (and clay); no trace gravel
45						
50						50': CLAYEY SILTY SAND (SM): brown, fine to coarse-grained sand; mixture of silt and clay; 50% sand, 50% clay and silt mixture,
55	SM ML					some gravel
60						60': SANDY SILT and CLAY (ML-CL): brown, fine to medium-grained sand; 30-40% sand, 60-70% silt and clay, some gravel
65	ML CL					
70	SM					70': SILTY SAND (SM): brown, fine to coarse-grained sand; 20-30% silt, 70-80% sand

LOGGED BY David Broermann

DATE 10/15-21/96

CHECKED BY

SOIL BOREHOLE LOG

SITE NAME AND LOCATION 808708313 UIC Phoenix, AZ	DRILLING METHOD: CME 75 HD with 8-inch OD Hollow Stem Augers	BORING NO. MW-3M	
	SAMPLING METHOD: "California modified" 18 and 24-inch split barrel samplers with 2x6-inch brass sleeves	SHEET 2 OF 5	
		DRILLING	
		START	FINISH
	WATER LEVEL: NA	TIME 1700	TIME 1000
	TIME: NA		
	DATE: NA	DATE 10/15/96	DATE 10/21/96
DATUM: APPROXIMATE ELEVATION:	CASING DEPTH: NA		

DRILLING RIG:

ANGLE: vertical HAMMER WEIGHT:

SAMPLE HAMMER TORQUE: FT.-LBS

SURFACE CONDITIONS:

DEPTH IN FEET	Soil Graph	Inches Driven / Inches Recovered	Sample No / Sample Depth	BLOWS	TIME	SAMPLE NUMBER AND DESCRIPTION OF MATERIAL
75						
80						80': SILTY SAND (SM): brown, fine to coarse-grained sand: 20-30% silt, 70-80% sand
85	SM					
90						90': SILTY SAND (SM): brown, fine to coarse-grained sand; 20-30% silt, 70-80% sand
95						
100						100': SANDY SILT (ML), SILTY SAND (SM): brown, fine-grained sand, silt, and some clay
105	ML-SM					
110						110': SILTY SAND (SM): brown, fine to medium-grained sand; trace coarse sand and gravel
115	SM					
120						120': SANDY CLAYEY SILT (ML): brown, fine-grained sand with clay and silt; 40-30% sand, 70-60% clay and silt
125	ML					
130						130': SANDY CLAYEY SILT (ML): brown, fine-grained sand; 20% sand, 80% silt and clay
135						
140						140': SILTY SAND (SM): brown, fine to medium-grained sand; some coarse sand and gravel
145	SM					

DRILLING CONTRACTOR Stewart Brothers Drilling

LOGGED BY David Broermann CHECKED BY

DATE 10/15-21/96

SOIL BOREHOLE LOG

SITE NAME AND LOCATION	DRILLING METHOD: CME 75 HD with 8-inch OD	BORING NO.
808708313 UIC Phoenix, AZ	Hollow Stem Augers	MW-3M
		SHEET 3 OF 5
	SAMPLING METHOD: "California modified"	
	18 and 24-inch split barrel samplers with	DRILLING
	2x6-inch brass sleeves	START / FINISH

						START	FINISH
WATER LEVEL	NA					TIME	TIME
TIME	NA					1700	1000
DATE	NA					DATE	DATE
CASING DEPTH	NA					10/15/96	10/21/96

DATUM: APPROXIMATE ELEVATION:

DRILLING RIG:

ANGLE: vertical HAMMER WEIGHT:

SAMPLE HAMMER TORQUE: FT.-LBS

SURFACE CONDITIONS:

DRILLING CONTRACTOR Stewart Brothers Drilling

DEPTH IN FEET	Soil Graph	Inches Driven / Inches Recovered	Sample No / Sample Depth	BLOWS	TIME	SAMPLE NUMBER AND DESCRIPTION OF MATERIAL
150	ML					150': SANDY SILT (ML) some CLAY: brown, fine to coarse- grained sand (predominately fine sand)
155						
						160': SILTY CLAYEY SAND (SM-SC): brown, fine-grained sand, some medium to coarse-grained sand;
165	SM SC					sample contains mixture of silt and clay
170						170': SILTY SAND (SM): brown, fine-grained sand and silt with some medium to coarse-grained sand: 80-70% fine sand
175						
180	SM					180': SILTY SAND (SM) some GRAVEL: gravel sizes from 1/4-3/4", fine to coarse-grained sand
185						
190	ML					190': SANDY SILT (ML) with some CLAY, CLAYEY SANDY SILT (ML): brown, fine-grained sand with clay and silts; 25% sand, 65%
195						silt, 10% clay
200						200': SANDY CLAYEY SILT, SANDY SILTY CLAY (ML-CL): brown, fine-grained sand with clay and silt; 30% sand, 70% silt and clay
205						
210	ML CL					210': SANDY CLAY and SILT (CL-ML): brown, fine-grained sand, with silt and clay; 10-20% sand
215						
220						220': SANDY CLAY and SILT (CL-ML): brown, fine to medium-grained sand; 10-20% sand

LOGGED BY David Broermann CHECKED BY

DATE 10/15-21/96

SOIL BOREHOLE LOG

SITE NAME AND LOCATION 808708313 UIC Phoenix, AZ	DRILLING METHOD: CME 75 HD with 8-inch OD Hollow Stem Augers	BORING NO. MW-3M	
	SAMPLING METHOD: "California modified" 18 and 24-inch split barrel samplers with 2x6-inch brass sleeves	SHEET 4 OF 5	
		DRILLING	
		START	FINISH
	WATER LEVEL: NA	TIME 1700	TIME 1000
	TIME: NA		
	DATE: NA	DATE 10/15/96	DATE 10/21/96
DATUM: APPROXIMATE ELEVATION:	CASING DEPTH: NA		

DRILLING RIG:

ANGLE: vertical HAMMER WEIGHT:

SAMPLE HAMMER TORQUE: FT.-LBS

SURFACE CONDITIONS:

DEPTH IN FEET	Soil Graph	Inches Driven / Inches Recovered	Sample No / Sample Depth	BLOWS	TIME	SAMPLE NUMBER AND DESCRIPTION OF MATERIAL
225						
230	ML CL					230': SANDY CLAY and SILT (CL-ML): brown, fine-grained sand; 20-30% sand
235						
240						240': SANDY CLAY (CL): brown. fine to medium-grained sand; 30-40% sand
245	CL					
250						250': SANDY CLAY (CL), CLAYEY SAND (SC): brown; very fine to medium-grained sand; 50-60% sand
255	CL SC					
260						260': SILTY SAND (SM): brown, fine to medium-grained sand; some coarse sand and trace gravel
265						
270	SM					270': SILTY SAND (SM): brown, fine to coarse-grained sand; trace gravel; 70-80% sand
275						
280						280': SILTY SAND (SM): brown, fine to coarse-grained sand; trace gravel; 70-80% sand
285						
290						290': SILTY SAND and GRAVEL (SM-GW): brown, fine to medium-grained sand; angular and subanguilar coarse-grained sand
295	SM GW					and gravel 1/4" to 1/2" diameter

DRILLING CONTRACTOR Stewart Brothers Drilling

LOGGED BY David Broermann CHECKED BY

DATE 10/15-21/96

SOIL BOREHOLE LOG

SITE NAME AND LOCATION 808708313 UIC Phoenix, AZ	DRILLING METHOD: CME 75 HD with 8-inch OD Hollow Stem Augers	BORING NO. MW-3M	
	SAMPLING METHOD: "California modified" 18 and 24-inch split barrel samplers with 2x6-inch brass sleeves	SHEET 5 OF 5	
		DRILLING	
		START	FINISH
	WATER LEVEL: NA	TIME 1700	TIME 1000
	TIME: NA		
	DATE: NA	DATE 10/15/96	DATE 10/21/96
DATUM: APPROXIMATE ELEVATION:	CASING DEPTH: NA		

DRILLING RIG:

ANGLE: vertical HAMMER WEIGHT:

SAMPLE HAMMER TORQUE: FT.-LBS

SURFACE CONDITIONS:

DRILLING CONTRACTOR Geomechanics Southwest, Inc.

DEPTH IN FEET	Soil Graph	Inches Driven / Inches Recovered	Sample No / Sample Depth	BLOWS	TIME	SAMPLE NUMBER AND DESCRIPTION OF MATERIAL
300	SM GW					300': GRAVELLY SILTY SAND, GRAVELLY SANDY SILT (SM-ML): brown, fine to coarse-grained sand with rounded to angular gravel
305	SM ML					sizes from1/4-3/4"
						310': SANDY CLAY (CL): brown, fine-grained sand, some medium-grained sand: 20-30% sand
315	CL					
320						320': SANDY CLAY (CL): brown, fine-grained sand; 20% sand
325						
330						330': SANDY CLAY (CL): brown, fine to medium-grained sand; 10-20% sand
335						
340	SM ML					340': SILTY SAND, SANDY SILT (SM-ML): brown, fine-grained sand
345						
350						350': SANDY SILT, SILTY SAND (ML-SM): brown, fine-grained sand
355						TD-350'
360						
365						
370						

LOGGED BY David Broermann

DATE 10/15-21/96

CHECKED BY

ELECTRIC LOGS FOR MW-3M

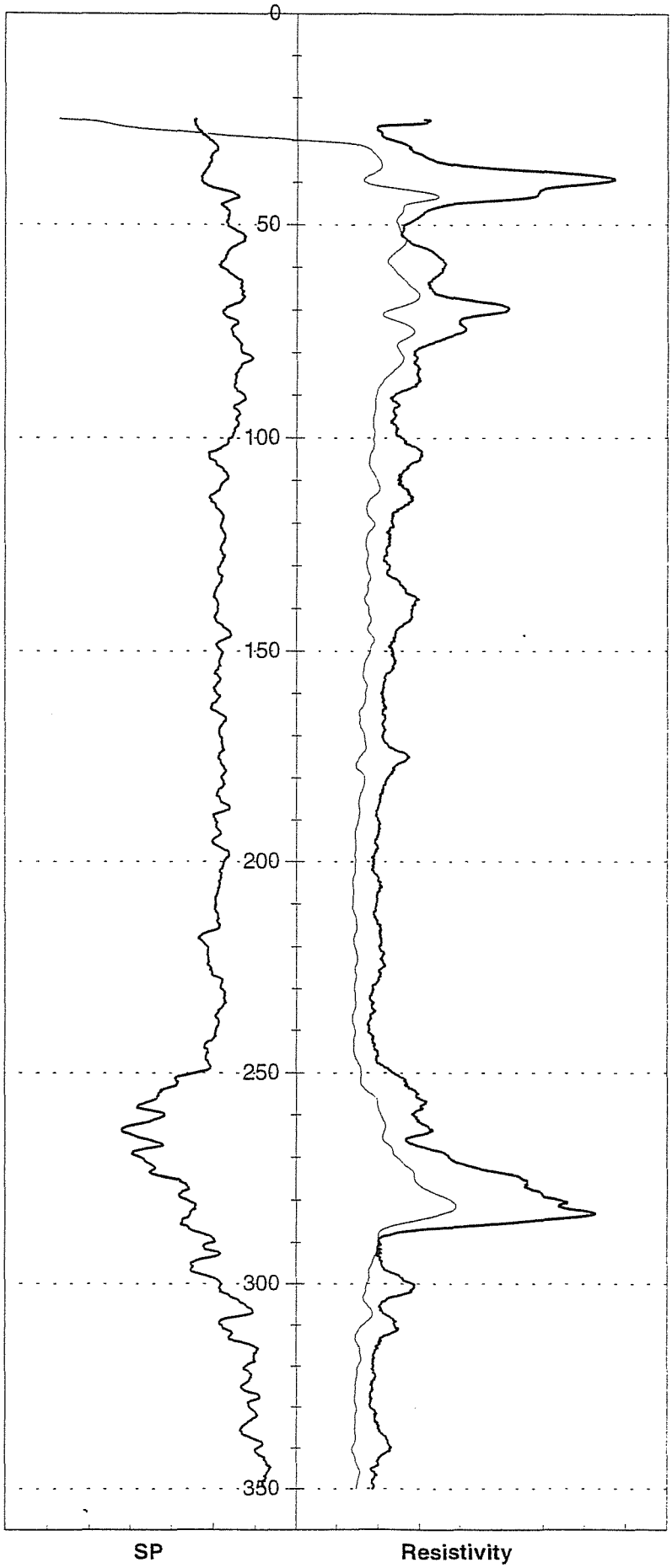

HSI GEOTRANS

NATURAL GAMMA AND NEUTRON LOG FOR MW-3M

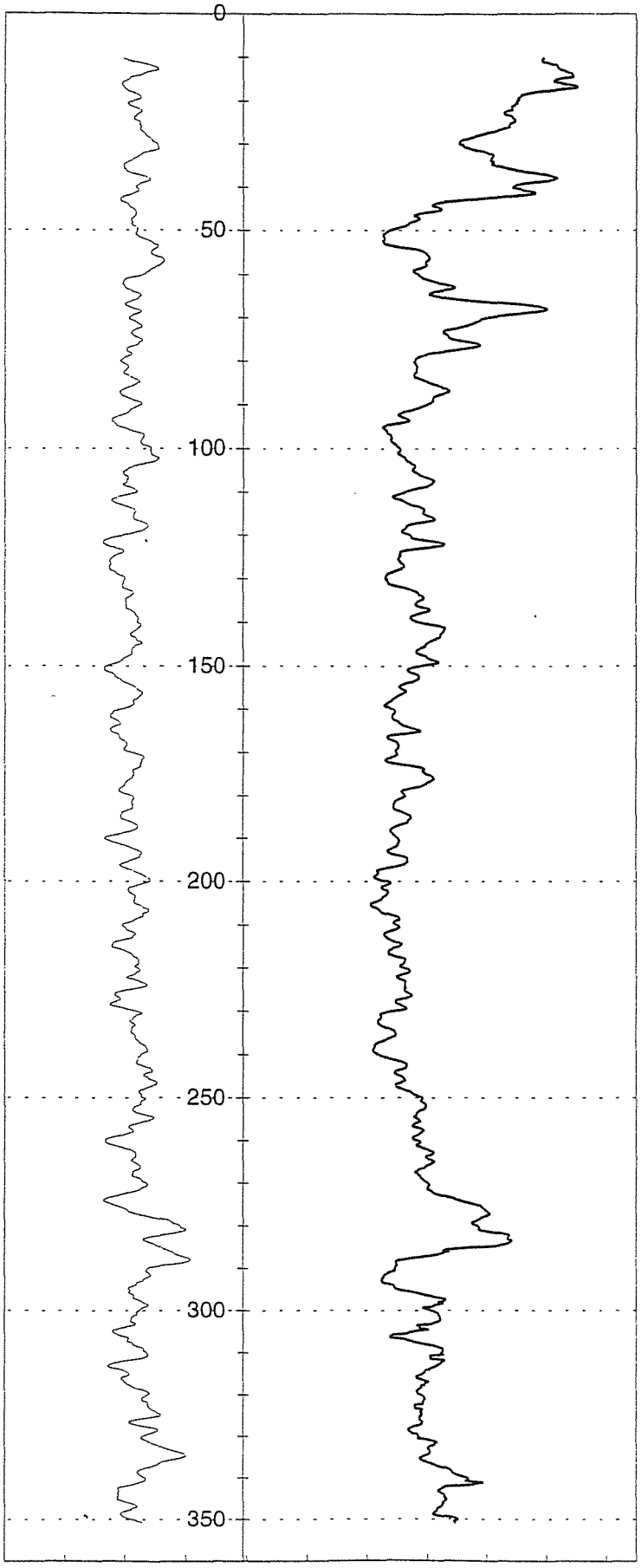

HSI GEOTRANS

MONITOR WELL CONSTRUCTION SUMMARY

Well No. MW-3M

Boring No. X-Ref:

Map Coords: 5143 N, 4541 E

Elevation Ground Level:

Job Number: 808708313

Top of Casing: 1108.86

Drilling Summary:		Construction Time Log: **Start** 10/16/96 **Finish** 10/22/96				
Total Depth	350 feet		Date	Time	Date	Time
Borehole Diameter	7 ⅞ inches	Drilling (6 1/2")	10/16/96	1130	10/16/96	1015
Casing Stick-Up	0	(12 1/4")	10/16/96	1245	10/16/96	1700
Driller	Stewart Brothers Drilling Co.	(7 ⅞")	10/21/96	0800	10/21/96	0930
Rig	Gardner Denver 1500					
Bit(s)	0-350 feet: 6 1/2" tricone 0-240 feet: 12 1/4" tricone 0-___ feet: 7 ⅞" tricone	Geophys. Logging				
Drilling Fluid	Bentonite mud and polymers	Casing: 8 ⅝"	10/17/96	0600	10/17/96	1100
Protective Casing	None	Casing: 4 ½"	10/21/98	1045	10/21/96	1400
Comments: 6 ½ inch pilot hole was drilled from 0 to 390 feet. The hole						
was logged and then reamed to 310 feet, using a 12 1/4-inch bit. Eight-						
inch steel casing was then set to 310 feet and grouted in place. A 7						
7/8 inch bit was then used to drill to a depth of 370 feet.		Sand Pack:	10/21/96	1400	10/21/96	1430
		Cementing:	10/17/96	1200	10/22/96	1330
		Development:				

Site Name: West Osborn Complex

Location: 3640 West Osborn Road, May Industry southwest

Well Design & Specifications

Basis: Geologic Log __x__ Geophysical Log __x__

Casing String(s): C = Casing S = Screen

Well Development:

Depth (ft)	String (C1, S1, etc.)	Elevation (ft)
0 to 240	C1- 8" LCS	
0 to 250	C2- 4.5" LCS	
250 to 290	S1 - 4.5" stainless steel	

Casing:	C1	8 5/8" Low carbon steel blank casing 0.188 wall
	C2	4.5" Low carbon steel blank casing 0.188 wall
Screen:	S1	4.5 " Stainless steel, 0.040" slot wire wrap
	S2	
Filter Pack:		242'-350': 8-12 Colorado silica sand.
Grout Seal:		0-240': neat cement with 3.5% bentonite; 0-259': neat
		cement with 3.5% bentonite on outside of 8 5/8" surface casing
Seal:		238'-242' #60 Colorado silica sand

Stabilization Test Data:

Time	pH	Spec. Cond. μs/m	Temp (C)

Pumped

Supervised By: David Broermann

Date:

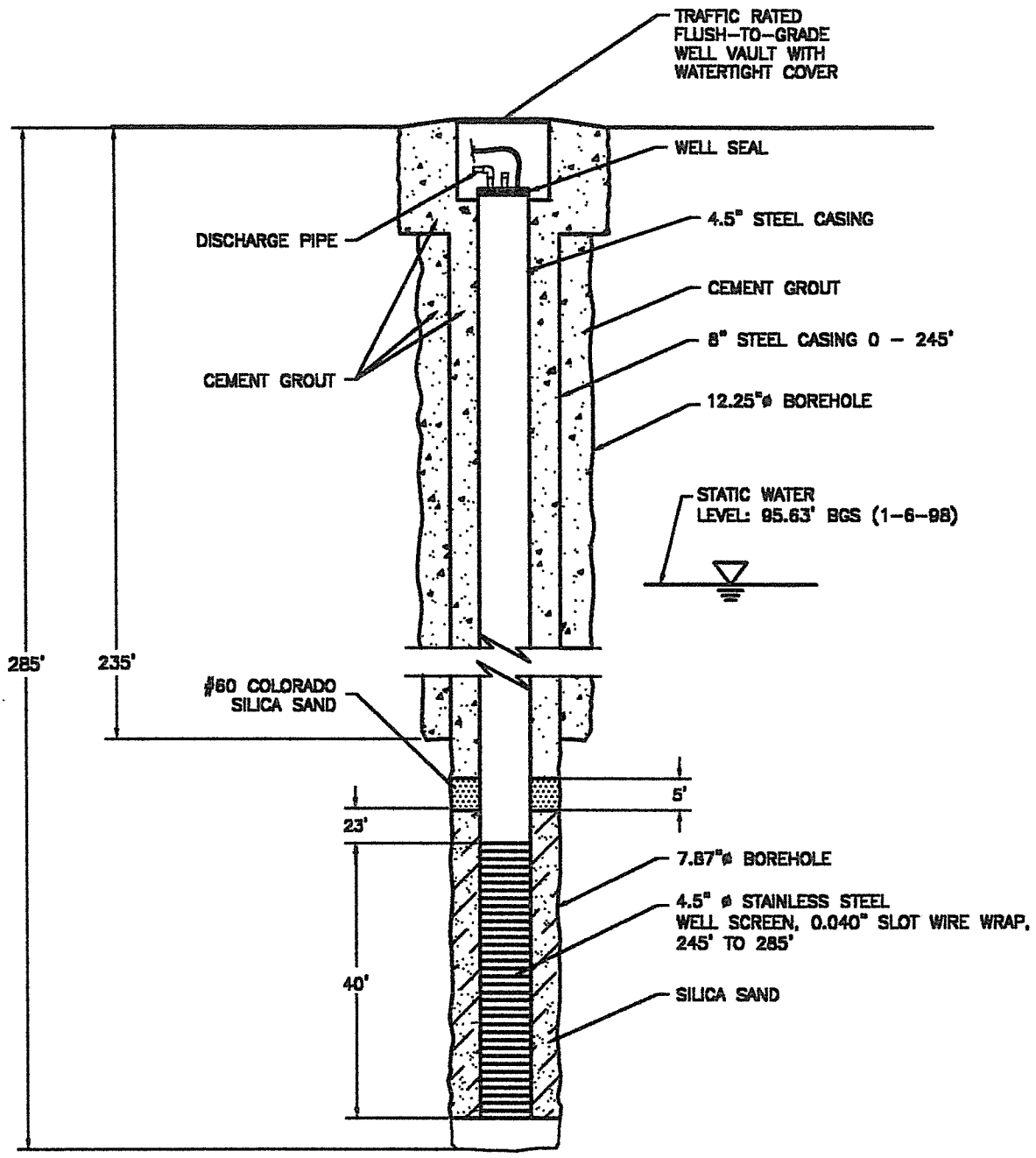

NOT TO SCALE

UNITED INDUSTRIAL CORPORATION	DATE: 7-27-98
INTERMEDIATE WELL MW-4M SECTION VIEW	DESIGNED:
	CHECKED:
	APPROVED:
	DRAWN: JDD
	PROJ.: N386-113
HSI GEOTRANS A Tetra Tech Company	

.../TR-REPORT/WELL-004M.DWG

MONITOR WELL CONSTRUCTION SUMMARY

Well No. MW-4M

Boring No. X-Ref:

Map Coords: 4932 N, 5038 E

Elevation Ground Level:

Job Number: 808708313

Top of Casing: 1107.88

Drilling Summary:		Construction Time Log: **Start** 9/31/96 **Finish** 10/4/96				
Total Depth	285 feet		Date	Time	Date	Time
Borehole Diameter	7 ⅞ inches	Drilling (6 1/2")	9/31/96	1645	10/1/96	1245
Casing Stick-Up	0	(12 1/4")	10/1/96	1430	10/2/96	0945
Driller	Stewart Brothers Drilling Co.	(7 ⅞")	10/4/96	0615	10/4/96	0700
Rig	Gardner Denver 1500					
Bit(s)	0-235 feet: 6 1/2" tricone 0-235 feet: 12 1/4" tricone 235-285 feet: 7 ⅞" tricone	Geophys. Logging				
Drilling Fluid	Bentonite mud and polymers	Casing: 8 ⅝"	10/2/96	1045	10/2/96	1600
Protective Casing	None	Casing: 4 ½"	10/4/96	0815	10/4/96	1100
Comments: 6 ½ inch pilot hole was drilled from 0 to 235 feet. The hole						
was logged and then reamed to 235 feet, using a 12 1/4-inch bit. Eight-						
inch steel casing was then set to 235 feet and grouted in place. A 7						
7/8 inch bit was then used to drill to a depth of 285 feet.		Sand Pack:	10/4/96	1115	10/4/96	1330
		Cementing:	10/4/96	1330	10/4/96	0930
		Development:				

Site Name: West Osborn Complex

Location: 3600 West Osborn Road

Well Design & Specifications

Basis: Geologic Log __x__ Geophysical Log __x__

Casing String(s): C = Casing S = Screen

Well Development:

Depth (ft)	String (C1, S1, etc.)	Elevation (ft)
0 to 235	C1- 8" LCS	
0 to 245	C2- 4.5" LCS	
245 to 285	S1 - 4.5" stainless steel	

Casing:	C1	8 5/8" Low carbon steel blank casing 0.188 wall
	C2	4.5" Low carbon steel blank casing 0.188 wall
Screen:	S1	4.5 " Stainless steel, 0.040" slot wire wrap
	S2	
Filter Pack:		322'-390': 8-12 Colorado silica sand.
Grout Seal:		0-232': neat cement with 3.5% bentonite; 0-235': neat
		cement with 3.5% bentonite on outside of 8 5/8" surface casing
Seal:		232'-237' #60 Colorado silica sand

Stabilization Test Data:

Time	pH	Spec. Cond. µs/m	Temp (C)

Pumped

Supervised By: David Broermann

Date:

STATE OF ARIZONA
DEPARTMENT OF WATER RESOURCES
GROUNDWATER MANAGEMENT SUPPORT SECTION

MAIL TO: P.O. BOX 458, PHOENIX, ARIZONA 85001-0458
500 NORTH THIRD STREET, PHOENIX, ARIZONA 85004-3903
PHONE (602) 417-2470 FAX (602) 417-2422

RECEIVED
JUN 14 1996
GROUNDWATER MGT

NOTICE OF INTENTION TO DRILL MONITOR/PIEZOMETER WELL

PLEASE READ GENERAL INSTRUCTIONS ON REVERSE SIDE OF THIS FORM BEFORE COMPLETING.

Section §45-596, Arizona Revised Statues provide: Prior to drilling a monitor or piezometer well, a Notice of Intention to Drill shall be filed with the Department.

1 Well/Land Location:

2N (Township) 2E (Range) 27 (Section)

SW ¼ (10 Acre) SE ¼ (40 Acre) NE ¼ (160 Acre)

2. Position location of the well on the land:

Latitude 33 o 29 ' 23 "

Longitude 112 o 08 ' 17 "

3. County: Maricopa

4. Owner of the land of welisite:

Mr. Charles D. Delaney
Name
3600 West Osborn
Address
Phoenix Az 85019
City State Zip

Telephone Number (602) 272-4855

5. Lessee of the land of well site:

Capitial Liquidators
Name
3600 West Osborn
Address
Phoenix Az. 85019
City Sate Zip

Telephone Number (602) 2724855

6. Owner of well:

United Industrial Corporation
Name
4636 East University Drive
Address
Phoenix Az 85034
City State Zip

Phone Number (602) 894-2800

7. Consulting firm:

Hydro-Search, Inc.
Name
David Broermann
Contact Person
(602) 894-2800
Phone Number

8. Purpose of well drilled pursuant to this notice:

Monitor XXXXXX
Piezometer

9. If for deepening or modifying, list well registration number:

55-

FOR DEPARTMENT USE ONLY

File No. A(2-2)27ADC
Filed 6-14-96 By
Input ENTERED JUL By 1996
DUPLICATE
Mailed 6-27-96 By
Registration 55-558433
AMA/INA PhL
W/S 07 S/B 04

10. Wil this proposed well be associated with a permit: Yes ____ No XX
If yes, Permit No. ____

11. Construction will start:

July (Month) 15 (Day) 1996 (Year)

12. Period well will remain in use:

10 Month/Years

13. For monitoring wells, is pump equipment to be installed?

Yes XXXX No ____

(a) If yes, design pump capacity:

10 -15 GPM

(b) What use will be made of the water:

Sampled and disposed

14. Drilling Firm:

Stewart Brothers Drilling Co.
Name
P.O. Box 2067
Address
Milan NM 87021
City State Zip

1-505-287-2986
Telephone Number

314
DWR License Number

A-4
ROC License Category

15. Proposed method of abandonment of well after project is completed: In accordance with A.A.C. R12-15-811, pursuant to R12-15-816

16. Is this well to monitor existing contamination? ____ Potential contamination XX. Please explain: Monitor wells are to be to monitor potential- existing contamintation previously identified in other monitor wells. chlorinated hydrocarbons

I state that this Notice is filed in compliance with Rule A.A.C. R12-15-809 and R12-15-816(F), and is complete and correct to the best of my knowledge and belief and that I understand the limitations and conditions set forth on the reverse side of this form.

Charles Delaney
Typed or Printed Name

Charles D. Delaney
Signature [ ] Land Owner [ ] Lessee of Wellsite

Date

17. If construction plans have been coordinated with Arizona Department of Environmental Quality, who is the agency contact? Ms. Ana Vargas

If construction plans have been coordinated with Arizona Department of Water Resources, who is the agency contact? None

18. WELL CONSTRUCTION PLAN:

a) Drilling method (mud rotary, hollow-stem auger, etc.) Mud Rotary

b) Borehole diameters: 12 inches from 0 feet to 250 feet.
7 7/8 inches from 250 feet to 300 feet.

c) Casing materials (PVC, steel, hollow-stem auger, etc.)

material Schedule 40 low carbon steel diameter 8 inches from + 2 feet to 250 feet.
material Schedule 40 low carbon steel diameter 4 inches from + 1.5 feet to 260 feet.

d) Method of sealing at reductions grout seal

e) Annular seal materials (cement, grout, etc.); method of placement (tremied, circulated):

material cement grout method tremied from 0 feet to 250 feet.
material bentonite method tremied from 250 feet to 253 feet.

f) Filter packs (state material):

material silica sand from 253 feet to 300 feet.
material from feet to feet.

g) Perforation or screen specification:

type 4-Inch, type 304 stianless steel from 260 feet to 300 feet.
type from feet to feet.

h) Method of well development (bail, air lift, surge) Air-lift, jet, surge and pump

i) Will surface or conductor casing extend above grade? Yes XX No

19. Include detailed construction diagram showing expected water depth in feet below land surface, and details of vault, if specified.

GENERAL INSTRUCTION

1. Please submit two original notices, with original signatures, and check or money order (no cash) in the amount of $ 10.00, to P.O. Box 458, Phoenix, Arizona 85001-0458 or hand deliver to 500 North Third Street, Phoenix, Arizona 85004-3903.

CONDITIONS

1. If an individual other than the land owner or lessee, sighns this notice, an original letter of authorization fromthe land owner/lessee, stating that the individuaal has permission to sign this specific Notice on their behalf, shall accompany the Notice of Intention to Drill a Monitor/Piezometer Well form.

2. Construction and abandonment standards for all wells shall be in accordance with A.A.C. R12-15-811 and R12-15-816.

3. Drilling of the well shall be completed within one year after the date of Notice.

4. A Well Driller Report is required within thirty days of completion of drilling. A Completion Report is required to be filed with the Department within thirty days after installation of pump equipment for monitor wells.

5. Pump equipment **may not** be installed on a well drilled for piezometer purposes. If a monitor will is pumped, pumping is limited to the maximum amount required for monitor purposes, **but in no case may exceed 35 gallons per minute and an annual volume of 10 acre feet total.**

6. A.A.C. Rule R12-15-811.H.2, requires that: "A monitor well shall be identified as such on the vault cover or at the top of the steel casing. Identification information will include well registration number."

Special construction standards, required pursuant to A.A.C. Rule R12-15-821:

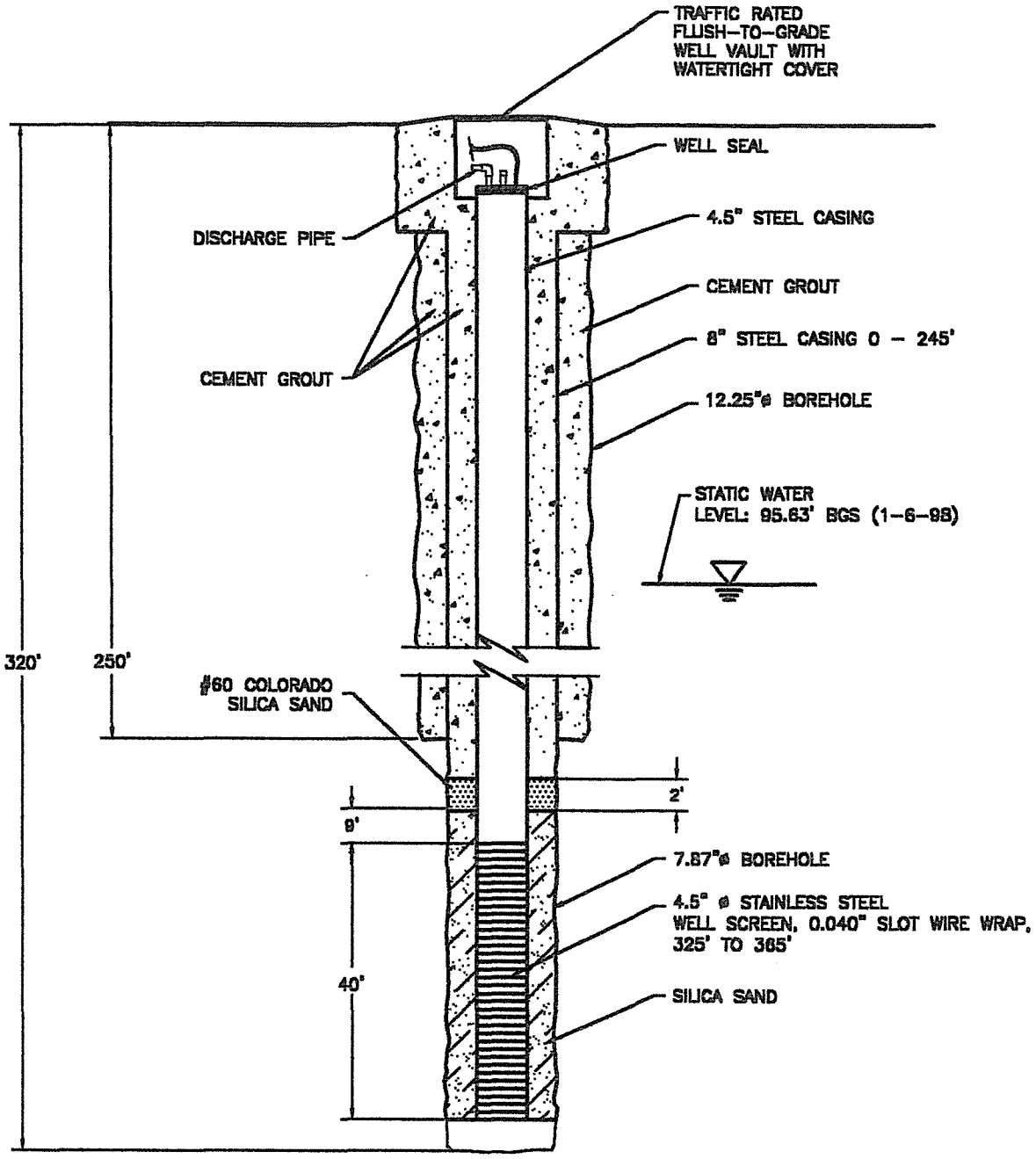

NOT TO SCALE

UNITED INDUSTRIAL CORPORATION	DATE: 7-27-96
INTERMEDIATE WELL MW-6M SECTION VIEW	DESIGNED:
	CHECKED:
	APPROVED:
	DRAWN: JDD
	PROJ.: N386-113
HSI GEOTRANS A Tetra Tech Company	

.../RI-REPORT/WELL-DGN.DWG

MONITOR WELL CONSTRUCTION SUMMARY

Well No. MW-6M

Boring No. X-Ref:

Map Coords: 3052 N, 32433 E

Elevation Ground Level:

Job Number: 808708313

Top of Casing: 1098.14

Drilling Summary:		Construction Time Log: **Start** 8/27/96 **Finish** 9/13/96				
Total Depth	370 feet		Date	Time	Date	Time
Borehole Diameter	7 ⅞ inches	Drilling (6 1/2")	9/5/96	0930	9/11/96	0820
Casing Stick-Up	0	(12 1/4")	8/27/96	1415	8/28/96	1530
Driller	Stewart Brothers Drilling Co.	(7 ⅞")	8/30/96	1230	9/3/96	0945
1700Rig	Gardner Denver 1500					
Bit(s)	0-250 feet: 6 1/2" tricone 0-250 feet: 12 1/4" tricone 250-320 feet: 7 ⅞" tricone	Geophys. Logging				
Drilling Fluid	Bentonite mud and polymers	Casing: 8 ⅝"	9/9/96	1300	9/9/96	1800
Protective Casing	None	Casing: 4 ½"	9/11/96	1300	9/11/96	1445
Comments: drilled 6½" pilot hole prior to drilling 12 ¼" borehole						
		Sand Pack:				
		Cementing:	9/10/96	0715	9/10/96	0845
		Development:	9/12/96	1300	9/13/96	1530

Site Name: West Osborn Complex

Location: 39th Avenue and Earll Drive

Well Design & Specifications

Basis: Geologic Log x Geophysical Log x

Casing String(s): C = Casing S = Screen

Well Development:

Depth (ft)	String (C1, S1, etc.)	Elevation (ft)
0 to 250	C1- 8" LCS	
0 to 325	C2- 4.5" LCS	
325-365	S1 - 4.5" stainless steel	

Casing:	C1	8 5/8" Low carbon steel blank casing 0.188 wall
	C2	4.5" Low carbon steel blank casing 0.188 wall
Screen:	S1	4.5 " Stainless steel, 0.040" slot wire wrap
	S2	
Filter Pack:		370'-316': 8-12 Colorado silica sand.
Grout Seal:		310-311': neat cement with 3.5% bentonite; 0-259': neat
		cement with 3.5% bentonite on outside of 8 5/8" surface casing
Seal:		316'-314' #60 Colorado silica sand

Stabilization Test Data:

Time	pH	Spec. Cond. µs/m	Temp (C)

STATE OF ARIZONA
DEPARTMENT OF WATER RESOURCES
GROUNDWATER MANAGEMENT SUPPORT SECTION
MAIL TO: P.O. BOX 458, PHOENIX, ARIZONA 85001-0458
500 NORTH THIRD STREET, PHOENIX, ARIZONA 85004-3903
PHONE (602) 417-2470 FAX (602) 417-2422

RECEIVED
JUN 28 1996
GROUNDWATER MGT

NOTICE OF INTENTION TO DRILL MONITOR/PIEZOMETER WELL

PLEASE READ GENERAL INSTRUCTIONS ON REVERSE SIDE OF THIS FORM BEFORE COMPLETING.

Section §45-596, Arizona Revised Statues provide: Prior to drilling a monitor or piezometer well, a Notice of Intention to Drill shall be filed with the Department.

1 Well/Land Location:

2N (Township) 2E (Range) 27 (Section)

NW ¼ (10 Acre) SW ¼ (40 Acre) SE ¼ (160 Acre)

2. Position location of the well on the land:

Latitude 33 o 28 ' 58 "

Longitude 112 o 08 ' 34 "

3. County: Maricopa

4. Owner of the land of wellsite:

City of Phoenix
Name
200 West Washington
Address
Phoenix (City) Az. (Sate) 85003 (Zip)

Telephone Number 261-8812

5. Lessee of the land of wellsite:

NA
Name

Address

City Sate Zip

Telephone Number

6. Owner of well:

United Industrial Corporation
Name
4636 East University STE 145
Address
Phoenix (City) Az (State) 85034 (Zip)

Phone Number (602) 894-2800

7. Consulting firm:

Hydro-Search, Inc.
Name
David Broermann
Contact Person
(602) 894-2800
Phone Number

8. Purpose of well drilled pursuant to this notice:

Monitor XXXXXX
Piezometer

9. If for deepening or modifying, list well registration number:

55-

FOR DEPARTMENT USE ONLY

File No. A(2-2)27dcB
Filed 6-28-96 By KB
Input By

DUPLICATE
Mailed 7-9-96 By KB
Registration 55- 558699
AMA/INA PNA
W/S 07 S/B 04

10. Will this proposed well be associated with a permit: Yes ___ No XX
If yes, Permit No.

11. Construction will start:

July (Month) 30 (Day) 1996 (Year)

12. Period well will remain in use:

10 ~~Months~~/Years

13. For monitoring wells, is pump equipment to be installed?

Yes XXXX No

(a) If yes, design pump capacity:

10 - 15 GPM

(b) What use will be made of the water:

Sampled and disposed

14. Drilling Firm:

Stewart Brothers Drilling Co.
Name

P.O. Box 2067
Address

Milans (City) NM (State) 87021 (Zip)

1-505-287-2986
Telephone Number

314
DWR License Number

A-4
ROC License Category

15. Proposed method of abandonment of well after project is completed: In accordance with A.A.C. R12-15-811, pursuant to R12-15-816

16. Is this well to monitor existing contamination? _____ **Potential contamination** XX **.Please explain:** Monitor wells will monitor potential-existing contamination previously identified in other monitor wells.

I state that this Notice is filed in compliance with Rule A.A.C. R12-15-809 and R12-15-816(F), and is complete and correct to the best of my knowledge and belief and that I understand the limitations and conditions set forth on the reverse side of this form.

FRANK M. ALES — **Typed or Printed Name**

Frank M. Ales — **Signature [✓] Land Owner [ ] Lessee of Wellsite**

7/2/96 — **Date**

17. **If construction plans have been coordinated with Arizona Department of Environmental Quality, who is the agency contact?** Ms. Ana Vargus

If construction plans have been coordinated with Arizona Department of Water Resources, who is the agency contact? None

18. **WELL CONSTRUCTION PLAN:**

a) Drilling method (mud rotary, hollow-stem auger, etc.) Mud Rotary

b) Borehole diameters: 12 inches from 0 feet to 250 feet.
7 7/8 inches from 250 feet to 300 feet.

c) Casing materials (PVC, steel, hollow-stem auger, etc.)

material Schedule 40 low carbon steel diameter 8 inches from 0 feet to 250 feet.
material Schedule 40 low carbon steel diameter 4 inches from 0 feet to 260 feet.

d) Method of sealing at reductions grout seal

e) Annular seal materials (cement, grout, etc.); method of placement (tremied, circulated):

material cement grout method tremied from 0 feet to 250 feet.
material bentonite method tremied from 250 feet to 253 feet.

f) Filter packs (state material):
material silica sand from 253 feet to 300 feet.
material _____ from _____ feet to _____ feet.

g) Perforation or screen specification:

type 4-Inch, type 304 stainless steel from 260 feet to 300 feet.
type _____ from _____ feet to _____ feet.

h) Method of well development (bail, air lift, surge) Air-lift, jet, surge and pump

Will surface or conductor casing extend above grade? Yes _____ No XXX

19. **Include detailed construction diagram showing expected water depth in feet below land surface, and details of vault, if specified.**

GENERAL INSTRUCTION

1. **Please submit two original notices, with original signatures, and check or money order (no cash) in the amount of $ 10.00, to P.O. Box 458, Phoenix, Arizona 85001-0458 or hand deliver to 500 North Third Street, Phoenix, Arizona 85004-3903.**

CONDITIONS

1. **If an individual other than the land owner or lessee, signs this notice, an original letter of authorization from the land owner/lessee, stating that the individual has permission to sign this specific Notice on their behalf, shall accompany the Notice of Intention to Drill a Monitor/Piezometer Well form.**

2. **Construction and abandonment standards for all wells shall be in accordance with A.A.C. R12-15-811 and R12-15-816.**

3. **Drilling of the well shall be completed within one year after the date of Notice.**

4. **A Well Driller Report is required within thirty days of completion of drilling. A Completion Report is required to be filed with the Department within thirty days after installation of pump equipment for monitor wells.**

5. **Pump equipment may not be installed on a well drilled for piezometer purposes. If a monitor will is pumped, pumping is limited to the maximum amount required for monitor purposes, but in no case may exceed 35 gallons per minute and an annual volume of 10 acre feet total.**

6. **A.A.C. Rule R12-15-811.H.2, requires that: "A monitor well shall be identified as such on the vault cover or at the top of the steel casing. Identification information will include well registration number."**

7. **Special construction standards, required pursuant to A.A.C. Rule R12-15-821:** _____

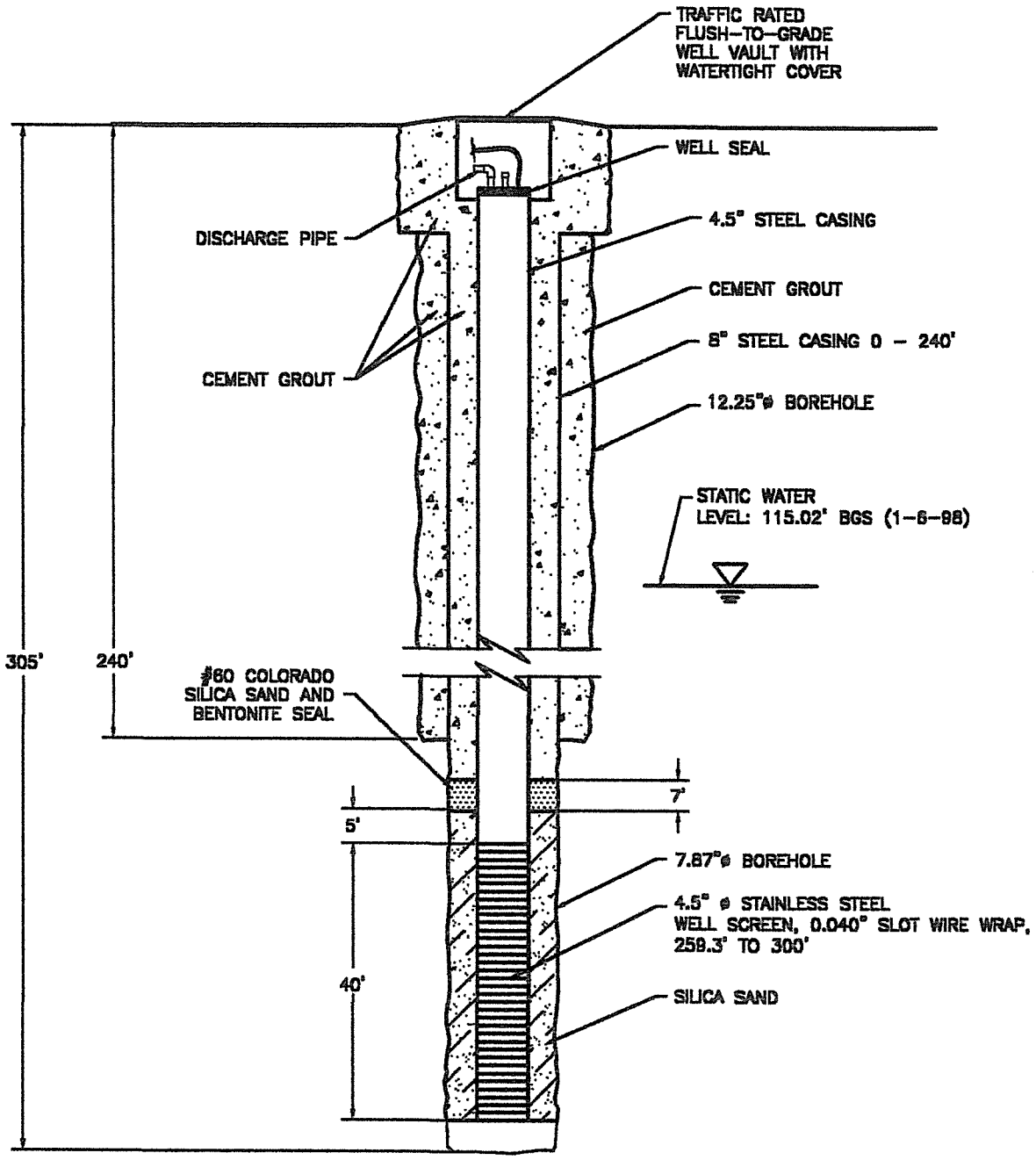

NOT TO SCALE

UNITED INDUSTRIAL CORPORATION	DATE: 7-27-98
INTERMEDIATE WELL MW-7M SECTION VIEW	DESIGNED:
	CHECKED:
	APPROVED:
	DRAWN: JDD
	PROJ.: N396-113
HSI GEOTRANS A Tetra Tech Company	

../RI-REPORT/WELL-007ALDWG

MONITOR WELL CONSTRUCTION SUMMARY

Well No. MW-7M

Boring No. X-Ref:

Map Coords: 4876 N, 3645 E

Elevation Ground Level:

Job Number: 808708313

Top of Casing: 1105.38

Drilling Summary:		Construction Time Log: **Start** 8/8/96 **Finish** 8/22/96				
Total Depth	305 feet		Date	Time	Date	Time
Borehole Diameter	7 ⅞ inches	Drilling (6 1/2")				
Casing Stick-Up	0	(12 1/4")	8/8/96	1544	8/12/96	1000
Driller	Stewart Brothers Drilling Co.	(7 ⅞")	8/14/96	0715	8/14/96	0840
1700Rig	Gardner Denver 1500					
Bit(s)	0-0 feet: 6 1/2" tricone 0-240 feet: 12 1/4" tricone 240-305 feet: 7 ⅞" tricone	Geophys. Logging				
Drilling Fluid	Bentonite mud and polymers	Casing: 8 ⅝"	8/13/96	0845	8/13/96	1010
Protective Casing	None	Casing: 4 ½"	8/14/96	1200	8/14/96	1445
Comments: Wells completed below land grade and a traffic box installed						
over well head						
		Sand Pack:	8/14/96	1535	8/14/96	1700
		Cementing:	8/15/96	0915	8/15/96	1020
		Development:	8/22/96	0800	8/22/96	1215

Well Design & Specifications

Basis: Geologic Log __x__ Geophysical Log __x__

Casing String(s): C = Casing S = Screen

Well Development: Added SAPP to well and allowed solution to remain in well overnight; bailed 50 gallons of water and drilling mud from well; airlifted well from 294 ft bgs; 3000 gallons removed.

Depth (ft)	String (C1, S1, etc.)	Elevation (ft)
0 to 240	C1- 8" LCS	
0 to 259.3	C2- 4.5" LCS	
259.3-300	S1 - 4.5" stainless steel	

Casing:	C1	8 5/8" Low carbon steel blank casing 0.188 wall
	C2	4.5" Low carbon steel blank casing 0.188 wall
Screen:	S1	4.5 " Stainless steel, 0.040" slot wire wrap
	S2	
Filter Pack:		254'-305': 8-12 Colorado silica sand.
Grout Seal:		0-247': neat cement with 3.5% bentonite
Seal:		247'-252': Bentonite pellets
		252'-254' #60 Colorado silica sand

Stabilization Test Data:

Time	pH	Spec. Cond. µs/m	Temp (C)
Pumped			

Site Name: West Osborn Complex

Location: 3606 West Osborn Road

Supervised By: David Broermann

Date:

STATE OF ARIZONA
DEPARTMENT OF WATER RESOURCES
GROUNDWATER MANAGEMENT SUPPORT SECTION
MAIL TO: P.O. BOX 458, PHOENIX, ARIZONA 85001-0458
500 NORTH THIRD STREET, PHOENIX, ARIZONA 85004-3903
PHONE (602) 417-2470 FAX (602) 417-2422

RECEIVED JUN 28 1996 GROUNDWATER MGT

NOTICE OF INTENTION TO DRILL MONITOR/PIEZOMETER WELL

PLEASE READ GENERAL INSTRUCTIONS ON REVERSE SIDE OF THIS FORM BEFORE COMPLETING.

Section §45-596, Arizona Revised Statues provide: Prior to drilling a monitor or piezometer well, a Notice of Intention to Drill shall be filed with the Department.

1 Well/Land Location:

2N (Township) 2E (Range) 27 (Section)

NW ¼ (10 Acre) SW ¼ (40 Acre) NE ¼ (160 Acre)

2. Position location of the well on the land:

Latitude 33 o 29 ' 33 "

Longitude 112 o 08 ' 34 "

3. County: Maricopa

4. Owner of the land of wellsite:

sac School District Number 5
Name
3348 West McDowell Road
Address
Phoenix Az. 85009
City Sate Zip

Telephone Number 484-4700

5. Lessee of the land of wellsite:

NA
Name

Address

City Sate Zip

Telephone Number

6. Owner of well:

United Industrial Corporation
Name
4636 East University
Address
Phoenix Az 85034
City State Zip

Phone Number (602) 894-2800

7. Consulting firm:

Hydro-Search, Inc.
Name
David Broermann
Contact Person
(602) 894-2800
Phone Number

8. Purpose of well drilled pursuant to this notice:

Monitor XXXXXX
Piezometer

9. If for deepening or modifying, list well registration number:

55-

FOR DEPARTMENT USE ONLY

File No. A(2-2)27 ACB
Filed 6-28-96 By
Input By

DUPLICATE
Mailed 7-9-96 By
Registration 55- 558665
AMA/INA Phx
W/S 07 S/B 04

10. Will this proposed well be associated with a permit: Yes ___ No XX
If yes, Permit No.

11. Construction will start:

July 15 1996
Month Day Year

12. Period well will remain in use:

10 ~~Month~~/Years

13. For monitoring wells, is pump equipment to be installed?

Yes XXXX No

(a) If yes, design pump capacity:

10 - 15 GPM

(b) What use will be made of the water:

Sampled and disposed

14. Drilling Firm:

Stewart Brothers Drilling Co.
Name

P.O. Box 2067
Address

Milans NM 87021
City State Zip

1-505-287-2986
Telephone Number

314
DWR License Number

A-4
ROC License Category

15. Proposed method of abandonment of well after project is completed: In accordance with A.A.C. R12-15-811, pursuant to R12-15-816

16. Is this well to monitor existing contamination? _____ **Potential contamination** XX **.Please explain:** Monitor wells will monitor potential-existing contamination previously identified in other monitor wells.

I state that this Notice is filed in compliance with Rule A.A.C. R12-15-809 and R12-15-816(F), and is complete and correct to the best of my knowledge and belief and that I understand the limitations and conditions set forth on the reverse side of this form.

ARTHUR ORTIZ, JR. 6/26/96

Typed or Printed Name **Signature [ ] Land Owner [ ] Lessee of Wellsite** **Date**

17. **If construction plans have been coordinated with Arizona Department of Environmental Quality, who is the agency contact?** ____
Ms. AnaVargus

If construction plans have been coordinated with Arizona Department of Water Resources, who is the agency contact? None

18. **WELL CONSTRUCTION PLAN:**

a) Drilling method (mud rotary, hollow-stem auger, etc.) Mud Rotary

b) Borehole diameters: 12 inches from 0 feet to 250 feet.
7 7/8 inches from 250 feet to 300 feet.

c) Casing materials (PVC, steel, hollow-stem auger, etc.)

material Schedule 40 low carbon steel diameter 8 inches from 0 feet to 250 feet.
material Schedule 40 low carbon steel diameter 4 inches from 0 feet to 260 feet.

d) Method of sealing at reductions grout seal

e) Annular seal materials (cement, grout, etc.); method of placement (tremied, circulated):

material cement grout method tremied from 0 feet to 250 feet.
material bentonite method tremied from 250 feet to 253 feet.

f) Filter packs (state material):
material silica sand from 253 feet to 300 feet.
material ____ from ____ feet to ____ feet.

g) Perforation or screen specification:

type 4-Inch, type 304 stainless steel from 260 feet to 300 feet.
type ____ from ____ feet to ____ feet.

h) Method of well development (bail, air lift, surge) Air-lift, jet, surge and pump

i) Will surface or conductor casing extend above grade? Yes ____ No XXX

19. **Include detailed construction diagram showing expected water depth in feet below land surface, and details of vault, if specified.**

GENERAL INSTRUCTION

1. **Please submit two original notices, with original signatures, and check or money order (no cash) in the amount of $ 10.00, to P.O. Box 458, Phoenix, Arizona 85001-0458 or hand deliver to 500 North Third Street, Phoenix, Arizona 85004-3903.**

CONDITIONS

1. **If an individual other than the land owner or lessee, signs this notice, an original letter of authorization from the land owner/lessee, stating that the individual has permission to sign this specific Notice on their behalf, shall accompany the Notice of Intention to Drill a Monitor/Piezometer Well form.**

2. **Construction and abandonment standards for all wells shall be in accordance with A.A.C. R12-15-811 and R12-15-816.**

3. **Drilling of the well shall be completed within one year after the date of Notice.**

4. **A Well Driller Report is required within thirty days of completion of drilling. A Completion Report is required to be filed with the Department within thirty days after installation of pump equipment for monitor wells.**

5. **Pump equipment may not be installed on a well drilled for piezometer purposes. If a monitor will is pumped, pumping is limited to the maximum amount required for monitor purposes, but in no case may exceed 35 gallons per minute and an annual volume of 10 acre feet total.**

6. **A.A.C. Rule R12-15-811.H.2, requires that: "A monitor well shall be identified as such on the vault cover or at the top of the steel casing. Identification information will include well registration number."**

7. **Special construction standards, required pursuant to A.A.C. Rule R12-15-821:** ____

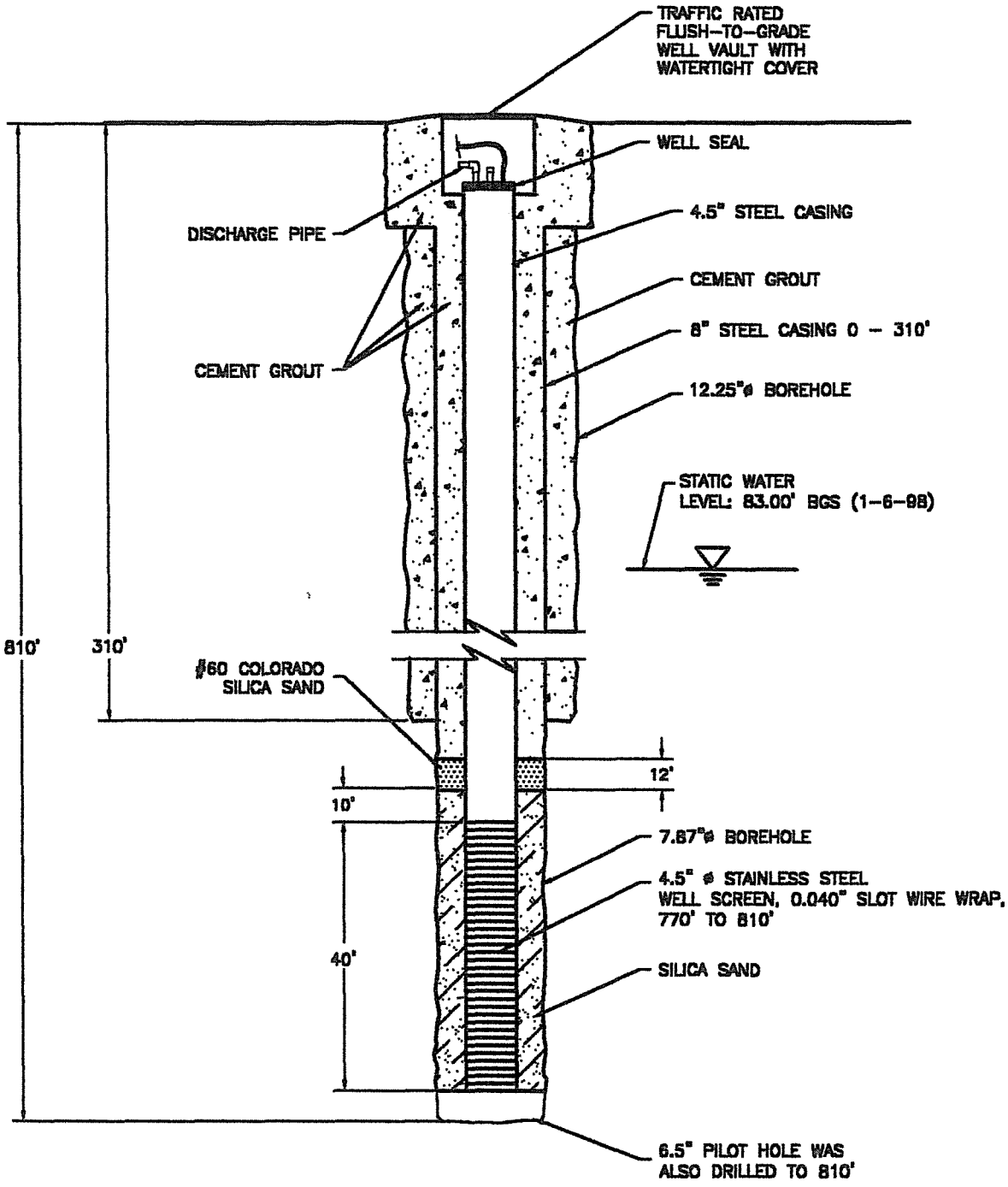

NOT TO SCALE

UNITED INDUSTRIAL CORPORATION	DATE: 7-27-98
	DESIGNED:
DEEP WELL MW-4L SECTION VIEW	CHECKED:
	APPROVED:
	DRAWN: JDD
	PROJ.: N386-113
HSI GEOTRANS A Tetra Tech Company	

.../FIG-REPORT/WELL-004L.DWG

MW-4L

SOIL BOREHOLE LOG

SITE NAME AND LOCATION 808708313/105 UIC Phoenix, AZ	DRILLING METHOD: mud rotary 6.5" open faced tricone	BORING NO. MW-4L	
	SAMPLING METHOD: grab every 25' or drive at lithology changes	SHEET 1 OF 11	
		DRILLING	
		START	FINISH
	WATER LEVEL / TIME / DATE / CASING DEPTH	TIME 0700 DATE 9/18/96	TIME 1000 DATE 9/20/96
DATUM: APPROXIMATE ELEVATION:			

DRILLING RIG: Gardner Denver 1500

SURFACE CONDITIONS: note: all samples logged wet

ANGLE: vertical HAMMER WEIGHT:

SAMPLE HAMMER TORQUE: FT.-LBS

DRILLING CONTRACTOR Stewart Brothers Drilling Company

DEPTH IN FEET	Soil Graph	Inches Driven / Inches Recovered	Sample No / Sample Depth	BLOWS	TIME	SAMPLE NUMBER AND DESCRIPTION OF MATERIAL
0						0-25': SILTY SAND (SM): trace gravel, brown; 80-90% fine to coarse-grained sand, 15-10% silt, approx. < 5% gravel, coarse
5						sand and subangular gravel
10	SM					
15						
20						
25						25'-50': CLAYEY GRAVEL (GC): some sand, brown, approx. 50% coarse sand and gravel
30						
35	GC					
40						
45						45': start of sand
50						50'-75': SAND some CLAY and SILT (SM-SW): brown, gray, medium to coarse-grained sand, some fine sand from shaker sampler
55	SM SW					
65						
70						

LOGGED BY David Broermann

DATE 9/18/96

CHECKED BY

SOIL BOREHOLE LOG

SITE NAME AND LOCATION	DRILLING METHOD:	BORING NO.
808708313/105 UIC Phoenix, AZ	mud rotary 6.5" open faced tricone	MW-4L
		SHEET 2 OF 11
	SAMPLING METHOD: grab every 25' or drive at lithology changes	DRILLING START / FINISH
	WATER LEVEL / TIME / DATE / CASING DEPTH	TIME 0700 / TIME 1000
DATUM: APPROXIMATE ELEVATION:		DATE 9/18/96 / DATE 9/20/96

DRILLING RIG: Gardner Denver 1500

SURFACE CONDITIONS: note: all samples logged wet

ANGLE: vertical HAMMER WEIGHT:

SAMPLE HAMMER TORQUE: FT.-LBS

DEPTH IN FEET	Soil Graph	Inches Driven / Inches Recovered	Sample No / Sample Depth	BLOWS	TIME	SAMPLE NUMBER AND DESCRIPTION OF MATERIAL
75	SM SW					75'-100': SILTY CLAYEY SAND (SC) with SANDY GRAVEL: zones/lenses trace caliche, 80% sand and fine gravel (approx. 20% of
80						sand is fine-grained), 20% fines (silt and clay) mixed
85	SC					
90						
95						
100						100'-125': SILTY CLAYEY SAND and GRAVEL (GC): interbedded sand and gravel (rig loud and quiet approx. 5-10' thick gravel),
105						brown, 40-50% coarse-grained sand and gravel, 20% fine to medium-grained sand, 30-40% clay
110						
115	GC					
120						
125						125'-150': SILTY CLAYEY SAND and GRAVEL (GC): interbedded sand and gravel (rig loud and quiet approx. 5-10' thick gravel),
130						brown, 40-50% coarse-grained sand and gravel, 20% fine to medium-grained sand, 40-50% clay
135						
140						
145						

DRILLING CONTRACTOR Stewart Brothers Drilling Company

LOGGED BY David Broermann

CHECKED BY

DATE 9/18/96

SOIL BOREHOLE LOG

SITE NAME AND LOCATION 808708313/105 UIC Phoenix, AZ	DRILLING METHOD: mud rotary 6.5" open faced tricone	BORING NO. MW-4L	
	SAMPLING METHOD: grab every 25' or drive at lithology changes	SHEET 3 OF 11	
		DRILLING	
		START	FINISH
	WATER LEVEL	TIME	TIME
	TIME	0700	1000
	DATE	DATE	DATE
DATUM: APPROXIMATE ELEVATION:	CASING DEPTH	9/18/96	9/20/96

DRILLING RIG: Gardner Denver 1500

SURFACE CONDITIONS: note: all samples logged wet

ANGLE: vertical HAMMER WEIGHT:

SAMPLE HAMMER TORQUE: FT.-LBS

DEPTH IN FEET	Soil Graph	Inches Driven / Inches Recovered	Sample No / Sample Depth	BLOWS	TIME	SAMPLE NUMBER AND DESCRIPTION OF MATERIAL
150	GC					150'-175': SANDY GRAVELLY CLAY, SAND (SC): brown, coarse-grained sand and gravel and clay
155	SC					155'-160': CLAY (CL) 155'-160': rig noise reduced due to formation
160	CL					[Drive Sample:160': CLAYEY SAND (SC): brown, fine to medium-grained sand]
165						
170	SC					
175						175'-200': SANDY CLAY to CLAY (CL): some sand in shaker sample, but mostly clay, 80-90% clay
180						
185						
190	CL					continued easy drilling clay and sand
195						
200						200'-225': GRAVELLY SANDY CLAY (CL): brown, fine to coarse-grained sand and gravel (subangular); 5-10% gravel, 20-30%
205						sand, 60-75% clay
215						
220						

DRILLING CONTRACTOR Stewart Brothers Drilling Company

LOGGED BY David Broermann

CHECKED BY

DATE 9/18/96

SOIL BOREHOLE LOG

SITE NAME AND LOCATION	DRILLING METHOD:	BORING NO.
808708313/105 UIC Phoenix, AZ	mud rotary 6.5" open faced tricone	MW-4L
		SHEET 4 OF 11
	SAMPLING METHOD: grab every 25' or drive at lithology changes	DRILLING START / FINISH
	WATER LEVEL / TIME / DATE / CASING DEPTH	TIME 0700 / TIME 1000 / DATE 9/18/96 / DATE 9/20/96
DATUM: APPROXIMATE ELEVATION:		

DRILLING RIG: Gardner Denver 1500

SURFACE CONDITIONS: note: all samples logged wet

ANGLE: vertical HAMMER WEIGHT:

SAMPLE HAMMER TORQUE: FT.-LBS

DRILLING CONTRACTOR Stewart Brothers Drilling Company

DEPTH IN FEET	Soil Graph	Inches Driven / Inches Recovered	Sample No / Sample Depth	BLOWS	TIME	SAMPLE NUMBER AND DESCRIPTION OF MATERIAL
225	SC CL					225'-250': GRAVELLY SANDY CLAY (CL): brown, fine to coarse-grained sand and gravel, sizes range from
230						1/4" to 1/2", rounded and subangular; 10-20% gravel, 20-30% sand, 60-75% clay
235						
240						
245	CL					
250						250'-275': GRAVELLY CLAY, SANDY GRAVELLY CLAY (CL): brown, fine to coarse-grained sand and gravel, sizes range from 1/4"
255						to 1/2", rounded and subangular; 10-20% gravel, 20-30% sand, 60-75% clay
260						
265						
270						
275	CL					275'-280': SANDY GRAVELLY CLAY (CL): brown, fine to coarse-grained sand and gravel, sizes range
280						from 1/4" to 1/2", rounded and subangular; 10-20% gravel, 20-30% sand, 60-75% clay
285	GM					[Drive Sample Attempt: 285': GRAVELLY SAND, SANDY GRAVEL (GM): sample refusal, 1/2"-3/4" gravel
290						280'-300': SANDY GRAVEL (GM): fine to coarse-grained sand, 1/4"-1/2" rounded and angular gravel, trace clay
295						

LOGGED BY David Broermann

DATE 9/18/96

CHECKED BY

SOIL BOREHOLE LOG

SITE NAME AND LOCATION	DRILLING METHOD:	BORING NO.
808708313/105 UIC Phoenix, AZ	mud rotary 6.5" open faced tricone	MW-4L
		SHEET 5 OF 11
	SAMPLING METHOD: grab every 25' or drive at lithology changes	DRILLING START / FINISH
	WATER LEVEL / TIME / DATE / CASING DEPTH	TIME 0700 / TIME 1000
		DATE 9/18/96 / DATE 9/20/96
DATUM: APPROXIMATE ELEVATION:		

DRILLING RIG: Gardner Denver 1500

SURFACE CONDITIONS: note: all samples logged wet

ANGLE: vertical HAMMER WEIGHT:

SAMPLE HAMMER TORQUE: FT.-LBS

DEPTH IN FEET	Soil Graph	Inches Driven / Inches Recovered	Sample No / Sample Depth	BLOWS	TIME	SAMPLE NUMBER AND DESCRIPTION OF MATERIAL
300	GM					300'-325': CLAYEY SAND with trace gravel, SANDY CLAY trace (SC-CL): brown; 40-50% clay, 50-40% very fine-grained sand
305						
310	SC CL					
315						
320						
325						325'-350': CLAYEY SAND (SC): brown, 40% clay, 60% very fine-grained sand
330						
335	SC					some interbedded gravel with sand, gravel lenses less than 3-5' thick
340						
345						
350						350'-375': SILTY SAND (SM-SC): with clay and gravel, gravel sizes range from 1/4" to 1/3", brown, fine to coarse-grained sand,
355						predominately fine, some coarse sand and fine/small gravel, gravel rounded and subangular
360	SM SC					
365						
370						

DRILLING CONTRACTOR Stewart Brothers Drilling Company

LOGGED BY David Broermann

CHECKED BY

DATE 9/18/96

SOIL BOREHOLE LOG

SITE NAME AND LOCATION 808708313/105 UIC Phoenix, AZ	DRILLING METHOD: mud rotary 6.5" open faced tricone	BORING NO. MW-4L	
	SAMPLING METHOD: grab every 25' or drive at lithology changes	SHEET 6 OF 11	
		DRILLING	
		START	FINISH
	WATER LEVEL / TIME / DATE / CASING DEPTH	TIME 0700	TIME 1000
		DATE 9/18/96	DATE 9/20/96
DATUM: APPROXIMATE ELEVATION:			

DRILLING RIG: Gardner Denver 1500

SURFACE CONDITIONS: note: all samples logged wet

ANGLE: vertical HAMMER WEIGHT:

SAMPLE HAMMER TORQUE: FT.-LBS

DRILLING CONTRACTOR Stewart Brothers Drilling Company

DEPTH IN FEET	Soil Graph	Inches Driven / Inches Recovered	Sample No / Sample Depth	BLOWS	TIME	SAMPLE NUMBER AND DESCRIPTION OF MATERIAL
375	SM SC					375'-400': SANDY CLAY, CLAYEY SAND (CL-SC): increased clay percentage from 375' to 390'
380						
385	CL SC					
390						increased sand
395						
400						400'-425': CLAYEY SILTY SAND (SC): brown, very fine-grained sand
405						
410						
415	SC					
420						
425						425'-450': CLAYEY SILTY SAND (SC): brown, very fine-grained sand; 10-15% clay, 10-15% silt, 60-80% sand
430						
435						
440						
445						

LOGGED BY David Broermann

CHECKED BY

DATE 9/18/96

SOIL BOREHOLE LOG

SITE NAME AND LOCATION 808708313/105 UIC Phoenix, AZ	DRILLING METHOD: mud rotary 6.5" open faced tricone	BORING NO. MW-4L	
	SAMPLING METHOD: grab every 25' or drive at lithology changes	SHEET 7 OF 11	
		DRILLING	
		START	FINISH
	WATER LEVEL	TIME	TIME
	TIME	0700	1000
	DATE	DATE	DATE
DATUM: APPROXIMATE ELEVATION:	CASING DEPTH	9/18/96	9/20/96

DRILLING RIG: Gardner Denver 1500

SURFACE CONDITIONS: note: all samples logged wet

ANGLE: vertical HAMMER WEIGHT:

SAMPLE HAMMER TORQUE: FT.-LBS

DEPTH IN FEET	Soil Graph	Inches Driven / Inches Recovered	Sample No / Sample Depth	BLOWS	TIME	SAMPLE NUMBER AND DESCRIPTION OF MATERIAL
450	SC					450'-475': SILTY CLAYEY SAND (SC): trace gravel, brown; 20% silt, 20% clay, 60% sand (80% very fine-grained, 15% medium-grained, 5% coarse-grained)
455						
460	SC					
465						
470						
475						475'-500': CLAYEY SAND, SANDY CLAY trace-some gravel (SC-CL): brown, very fine-grained sand, some coarse sand and gravel, gravel is angular and subrounded
480	SC CL					
485						
490						
495						
500						500'-525': SILTY SAND, CLAYEY SAND (SM-SC): brown, very fine-grained sand, with clay and silt
505						
510	SM SC					
515						
520						

DRILLING CONTRACTOR Stewart Brothers Drilling Company

LOGGED BY David Broermann

CHECKED BY

DATE 9/18/96

SOIL BOREHOLE LOG

SITE NAME AND LOCATION	DRILLING METHOD:	BORING NO.
808708313/105 UIC Phoenix, AZ	mud rotary 6.5" open faced tricone	MW-4L
	SAMPLING METHOD: grab every 25' or drive at lithology changes	SHEET 8 OF 11

					DRILLING START	DRILLING FINISH
WATER LEVEL					TIME	TIME
TIME					0700	1000
DATE					DATE	DATE
CASING DEPTH					9/18/96	9/20/96

DATUM: APPROXIMATE ELEVATION:

DRILLING RIG: Gardner Denver 1500

SURFACE CONDITIONS: note: all samples logged wet

ANGLE: vertical HAMMER WEIGHT:

SAMPLE HAMMER TORQUE: FT.-LBS

DRILLING CONTRACTOR Stewart Brothers Drilling Company

DEPTH IN FEET	Soil Graph	Inches Driven / Inches Recovered	Sample No / Sample Depth	BLOWS	TIME	SAMPLE NUMBER AND DESCRIPTION OF MATERIAL
525	SM SC					525'-550': SILTY CLAYEY SAND , trace gravel (SC): brown, very fine-grained sand, gravel from 1/2" to 1/4", rounded and angular
530						
535						
540	SC					
545						
550						550'-575': CLAYEY SAND, SANDY CLAY (SC-CL): brown, very fine-grained sand and clay
555	SC CL					
560						
565						
570						
575						575'-600': SANDY CLAY (CL): brown, 50/50 mix of very fine-grained sand and clay, clay percentage increases with depth
580	CL					
585						
590						
595						

LOGGED BY David Broermann

CHECKED BY

DATE 9/18/96

SOIL BOREHOLE LOG

SITE NAME AND LOCATION	DRILLING METHOD:	BORING NO.
808708313/105 UIC Phoenix, AZ	mud rotary 6.5" open faced tricone	MW-4L
		SHEET 9 OF 11
	SAMPLING METHOD: grab every 25' or drive at lithology changes	DRILLING START / FINISH
	WATER LEVEL / TIME / DATE / CASING DEPTH	TIME 0700 / TIME 1000
		DATE 9/18/96 / DATE 9/20/96
DATUM: APPROXIMATE ELEVATION:		

DRILLING RIG: Gardner Denver 1500

SURFACE CONDITIONS: note: all samples logged wet

ANGLE: vertical HAMMER WEIGHT:

SAMPLE HAMMER TORQUE: FT.-LBS

DEPTH IN FEET	Soil Graph	Inches Driven / Inches Recovered	Sample No / Sample Depth	BLOWS	TIME	SAMPLE NUMBER AND DESCRIPTION OF MATERIAL
600	CL					600'-625': SANDY SILTY CLAY (ML-CL): brown, very fine-grained sand and silt
605						
610	ML CL					
615						
620						
625						625'-650': SANDY CLAY (CL): brown, very fine-grained sand with silt and clay
630						
635						
640						
645	CL					
650						650'-675': SANDY SILTY CLAY (CL): brown, very fine-grained sand (20%) with silty clay
655						
660						
665						
670						

DRILLING CONTRACTOR Stewart Brothers Drilling Company

LOGGED BY David Broermann

CHECKED BY

DATE 9/18/96

SOIL BOREHOLE LOG

SITE NAME AND LOCATION	DRILLING METHOD:	BORING NO.
808708313/105 UIC Phoenix, AZ	mud rotary 6.5" open faced tricone	MW-4L
		SHEET 10 OF 11
	SAMPLING METHOD: grab every 25' or drive at lithology changes	DRILLING START / FINISH
	WATER LEVEL / TIME / DATE / CASING DEPTH	TIME 0700 / TIME 1000
DATUM: APPROXIMATE ELEVATION:		DATE 9/18/96 / DATE 9/20/96

DRILLING CONTRACTOR Stewart Brothers Drilling Company

DRILLING RIG: Gardner Denver 1500

SURFACE CONDITIONS: note: all samples logged wet

ANGLE: vertical HAMMER WEIGHT:

SAMPLE HAMMER TORQUE: FT.-LBS

DEPTH IN FEET	Soil Graph	Inches Driven / Inches Recovered	Sample No / Sample Depth	BLOWS	TIME	SAMPLE NUMBER AND DESCRIPTION OF MATERIAL
675						675'-700': SILTY CLAY (CL): some sand, brown, trace to some sand interbedded from 675'-700'
680						
685						
690						
695						
700	CL					700'-725': SANDY CLAY (CL): brown, very fine-grained (some medium) sand; 40% sand, 60% clay
705						
710						
715						
720						725'-750': SANDY CLAY (CL): brown, very fine-grained (some medium) sand; 40% sand, 60% clay
725						
730						
735						
740						
745						

LOGGED BY David Broermann

DATE 9/18/96

CHECKED BY

SOIL BOREHOLE LOG

SITE NAME AND LOCATION	DRILLING METHOD:	BORING NO.
808708313/105 UIC Phoenix, AZ	mud rotary 6.5" open faced tricone	MW-4L
		SHEET 11 OF 11
	SAMPLING METHOD: grab every 25' or drive at lithology changes	DRILLING START / FINISH
	WATER LEVEL / TIME / DATE / CASING DEPTH	TIME 0700 / TIME 1000
DATUM: APPROXIMATE ELEVATION:		DATE 9/18/96 / DATE 9/20/96

DRILLING RIG: Gardner Denver 1500

SURFACE CONDITIONS: note: all samples logged wet

ANGLE: vertical HAMMER WEIGHT:

SAMPLE HAMMER TORQUE: FT.-LBS

DEPTH IN FEET	Soil Graph	Inches Driven / Inches Recovered	Sample No / Sample Depth	BLOWS	TIME	SAMPLE NUMBER AND DESCRIPTION OF MATERIAL
750	CL					
755						750'-775': SILTY SAND (SM): brown, 80-90% very fine to fine-grained sand, silt, trace clay
760						
765						
770	SM					
775						775'-800': SILTY SAND (SM): some gravel and clay, brown, trace to some gravel, sizes range from 1/4"-1"
780						
785						
790						
795						
800						800'-820': CLAYEY SANDY GRAVEL (SM-GM): increased percent of gravel
805	SM GM					
810						
815						
820						TD=820'

DRILLING CONTRACTOR Stewart Brothers Drilling Company

LOGGED BY David Broermann

CHECKED BY

DATE 9/18/96

ELECTRIC LOGS FOR MW-4L

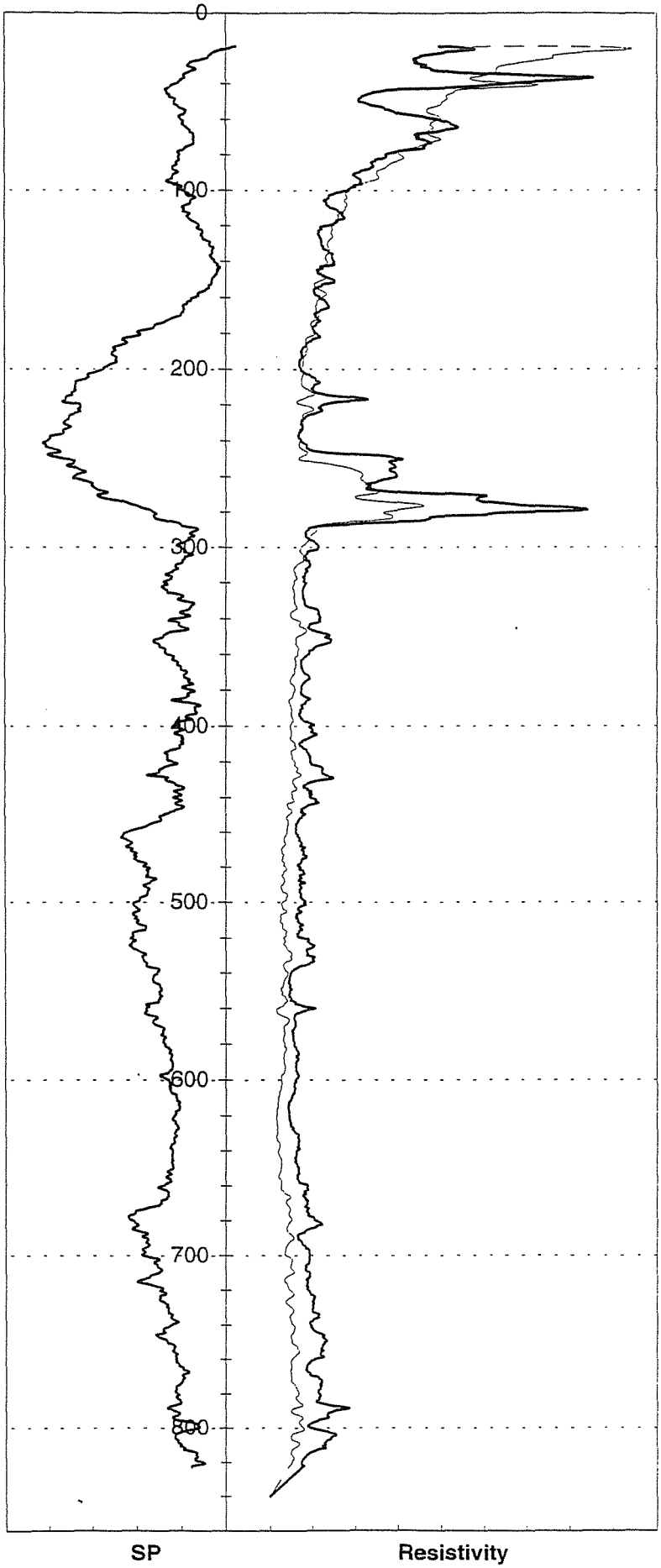

HSI GEOTRANS

NATURAL GAMMA AND NEUTRON LOG FOR MW-4L

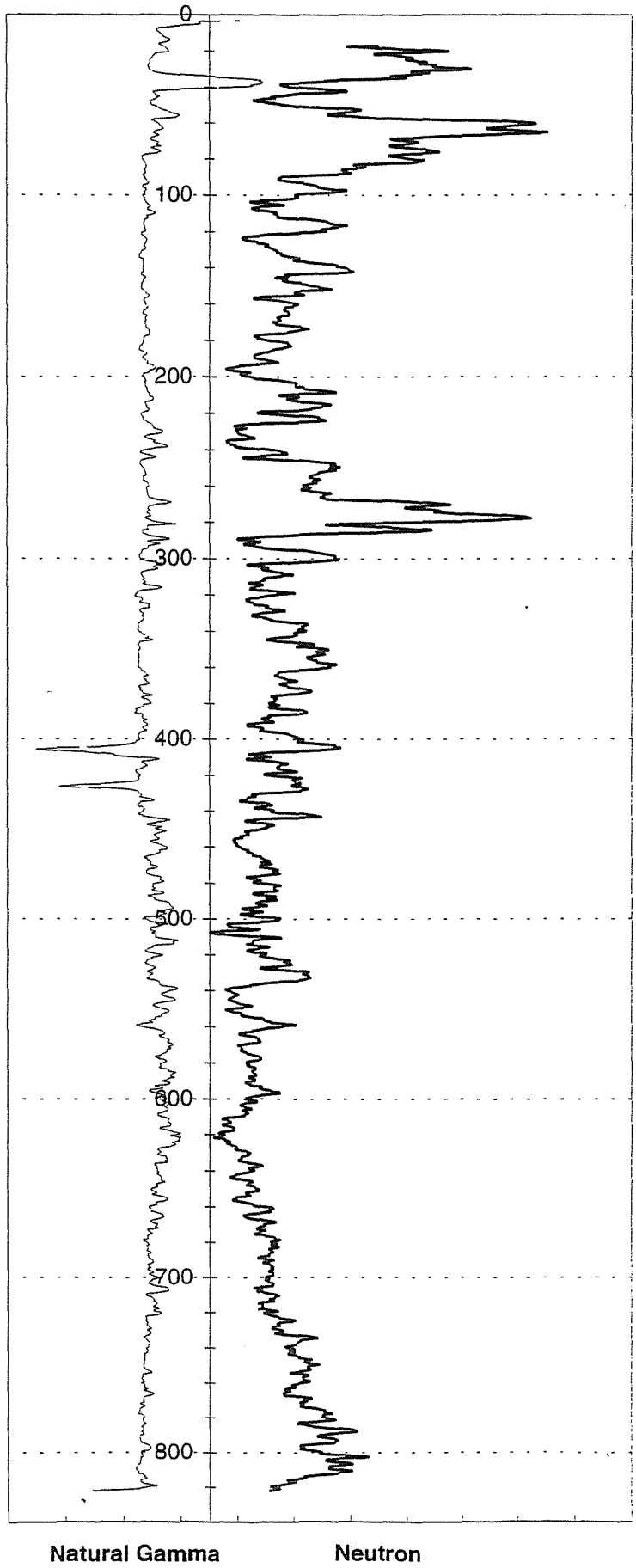

HSI GEOTRANS

MONITOR WELL CONSTRUCTION SUMMARY

Well No. MW-4L

Boring No. X-Ref:

Map Coords: 4956 N, 5062 E

Elevation Ground Level:

Job Number: 808708313

Top of Casing: 1108.14

Drilling Summary:		Construction Time Log: **Start** 9/17/96 **Finish** 9/27/96				
Total Depth	810 feet		Date	Time	Date	Time
Borehole Diameter	7 ⅞ inches	Drilling (6 1/2")	9/17/96	1700	9/20/96	1000
Casing Stick-Up	0	(12 1/4")	9/23/96	0730	9/23/96	1600
Driller	Stewart Brothers Drilling Co.	(7 ⅞")	9/25/96	1300	9/26/96	1200
1700Rig	Gardner Denver 1500					
Bit(s)	0-810 feet: 6 1/2" tricone 0-310 feet: 12 1/4" tricone 310-810 feet: 7 ⅞" tricone	Geophys. Logging	9/20/96	1130	9/20/96	
Drilling Fluid	Bentonite mud and polymers	Casing: 8 ⅝"	9/24/96	0900	9/24/96	1200
Protective Casing	None	Casing: 8 ⅝"	9/24/96	1230	9/24/96	1400
Comments: 6 ½ inch pilot hole was drilled from 0 to 810 feet. The hole		Casing: 4 ½"	9/24/96	1200	9/24/96	1800
was logged and then reamed to 310 feet, using a 12 1/4-inch bit. Eight-						
inch steel casing was then set to 310 feet and grouted in place. A 7						
7/8 inch bit was then used to drill to a depth of 810 feet.		Sand Pack:	9/27/96	0700	9/27/96	1800
		Cementing:	9/27/96	1200		
		Development:	9/27/96	10330	9/27/96	1130

Well Design & Specifications

Basis: Geologic Log x Geophysical Log x

Casing String(s): C = Casing S = Screen

Well Development: 9/27/96 well surged and bailed. 15 bags of sand

*bailed well during filter placement.

Depth (ft)	String (C1, S1, etc.)	Elevation (ft)
0 to 310	C1- 8" LCS	
0 to 770	C2- 4.5" LCS	
770 to 810	S1 - 4.5" stainless steel	

Casing: C1	8 5/8" Low carbon steel blank casing 0.188 wall
C2	4.5" Low carbon steel blank casing 0.188 wall
Screen: S1	4.5 " Stainless steel, 0.040" slot wire wrap
S2	
Filter Pack:	810' 760': 8-12 Colorado silica sand.
Grout Seal:	0-748': neat cement with 3.5% bentonite; 0-310': neat
	cement with 3.5% bentonite on outside of 8 5/8" surface casing
Seal:	748'-760' #60 Colorado silica sand

Stabilization Test Data:

Time	pH	Spec. Cond. µs/m	Temp (C)

Pumped

Site Name: West Osborn Complex

Location: 3600 West Osborn Road

Supervised By: David Broermann

Date:

STATE OF ARIZONA
DEPARTMENT OF WATER RESOURCES
GROUNDWATER MANAGEMENT SUPPORT SECTION
MAIL TO: P.O. BOX 458, PHOENIX, ARIZONA 85001-0458
500 NORTH THIRD STREET, PHOENIX, ARIZONA 85004-3903
PHONE (602) 417-2470 FAX (602) 417-2422

RECEIVED
JUN 14 1996
GROUNDWATER MGT

NOTICE OF INTENTION TO DRILL MONITOR/PIEZOMETER WELL

PLEASE READ GENERAL INSTRUCTIONS ON REVERSE SIDE OF THIS FORM BEFORE COMPLETING.

Section §45-596, Arizona Revised Statues provide: Prior to drilling a monitor or piezometer well, a Notice of Intention to Drill shall be filed with the Department.

Well/Land Location:

2N 2E 27
Township Range Section

SW ¼ SE ¼ NE ¼
10 Acre 40 Acre 160 Acre

. Position location of the well on the land:

Latitude 33 o 29 ' 23 "

Longitude 112 o 08 ' 17 "

. County: Maricopa

. Owner of the land of wellsite:

Mr. Charles D. Delaney

3600 West Osborn
Address
Phoenix Az. 85019
City State Zip

Telephone Number (602) 272-4855

Lessee of the land of well site:

Capitial Liquidators
Name
3600 West Osborn
Address
Phoenix Az. 85019
City Sate Zip

Telephone Number (602) 2724855

6. Owner of well:
United Industrial Corporation
Name
4636 East University Drive
Address
Phoenix Az 85034
City State Zip

Phone Number (602) 894-2800

7. Consulting firm:

Hydro-Search, Inc.
Name
David Broermann
Contact Person
(602) 894-2800
Phone Number

8. Purpose of well drilled pursuant to this notice:
Monitor XXXXXX
Piezometer

9. If for deepening or modifying, list well registration number:
55-

FOR DEPARTMENT USE ONLY
File No. A(2-2)27ADC
Filed 6-14-96 By
Input By
ENTERED JUL - 1 1996
DUPLICATE
Mailed 6-27-96 By
Registration 55-558430
AMA/INA PA
W/S 07 S/B 07

10. Wil this proposed well be associated with a permit: Yes ____ No XX
If yes, Permit No. ____

11. Construction will start:
July 15 1996
Month Day Year

12. Period well will remain in use:
10 Month/Years

13. For monitoring wells, is pump equipment to be installed?
Yes XXXX No ____
(a) If yes, design pump capacity:
10 -15 GPM
(b) What use will be made of the water:
Sampled and disposed

14. Drilling Firm:
Stewart Brothers Drilling Co.
Name
P.O. Box 2067
Address
Milan NM 87021
City State Zip
1-505-287-2986
Telephone Number
314
DWR License Number
A-4
ROC License Category

Proposed method of abandonment of well after project is completed: In accordance with A.A.C. R12-15-811 pursuant to R12-15-816

Is this well to monitor existing contamination? ____ Potential contamination XX Please explain: Monitor wells are to be to monitor potential- existing contamintation previously identified in other monitor wells. Chlorinated Aquifer in Arizona

ate that this Notice is filed in compliance with Rule A.A.C. R12-15-809 and R12-15-816(F), and is complete and correct to the best of knowledge and belief and that I understand the limitations and conditions set forth on the reverse side of this form.

Charles Delaney
ped or Printed Name

Charles D Jones
Signature [ ] Land Owner [ ] Lessee of Wellsite

Date

17. If construction plans have been coordinated with Arizona Department of Environmental Quality, who is the agency contact? Ms. Ana Vargus

If construction plans have been coordinated with Arizona Department of Water Resources, who is the agency contact? None

18. WELL CONSTRUCTION PLAN:

a) Drilling method (mud rotary, hollow-stem auger, etc.) Mud Rotary

b) Borehole diameters: 12 inches from 0 feet to 250 feet.
7 7/8 inches from 250 feet to 800 feet.

c) Casing materials (PVC, steel, hollow-stem auger, etc.)

material Schedule 40 low carbon steel diameter 8 inches from + 2 feet to 250 feet.
material Schedule 40 low carbon steel diameter 4 inches from + 1.5 feet to 760 feet.

d) Method of sealing at reductions grout seal

e) Annular seal materials (cement, grout, etc.); method of placement (tremied, circulated):

material cement grout method tremied from 0 feet to 748 feet.
material bentonite method tremied from 748 feet to 753 feet.

f) Filter packs (state material):

material silica sand from 753 feet to 800 feet.
material from feet to feet.

g) Perforation or screen specification:

type 4-inch, type 304 stianless steel from 760 feet to 800 feet.
type from feet to feet.

h) Method of well development (bail, air lift, surge) Air-lift, jet, surge and pump

i) Will surface or conductor casing extend above grade? Yes XX No

19. Include detailed construction diagram showing expected water depth in feet below land surface, and details of vault, if specified.

GENERAL INSTRUCTION

1. Please submit two original notices, with original signatures, and check or money order (no cash) in the amount of $ 10.00, to P.O. Box 458, Phoenix, Arizona 85001-0458 or hand deliver to 500 North Third Street, Phoenix, Arizona 85004-3903.

CONDITIONS

1. If an individual other than the land owner or lessee, sighns this notice, an original letter of authorization fromthe land owner/lessee, stating that the individuaal has permission to sign this specific Notice on their behalf, shall accompany the Notice of Intention to Drill a Monitor/Piezometer Well form.

2. Construction and abandonment standards for all wells shall be in accordance with A.A.C. R12-15-811 and R12-15-816.

3.. Drilling of the well shall be completed within one year after the date of Notice.

4. A Well Driller Report is required within thirty days of completion of drilling. A Completion Report is required to be filed with the Department within thirty days after installation of pump equipment for monitor wells.

5. Pump equipment may not be installed on a well drilled for piezometer purposes. If a monitor will is pumped, pumping is limited to the maximum amount required for monitor purposes, **but in no case may exceed 35 gallons per minute and an annual volume of 10 acre feet total.**

6. A.A.C. Rule R12-15-811.H.2, requires that: "A monitor well shall be identified as such on the vault cover or at the top of the steel casing. Identification information will include well registration number."

7. Special construction standards, required pursuant to A.A.C. Rule R12-15-821:

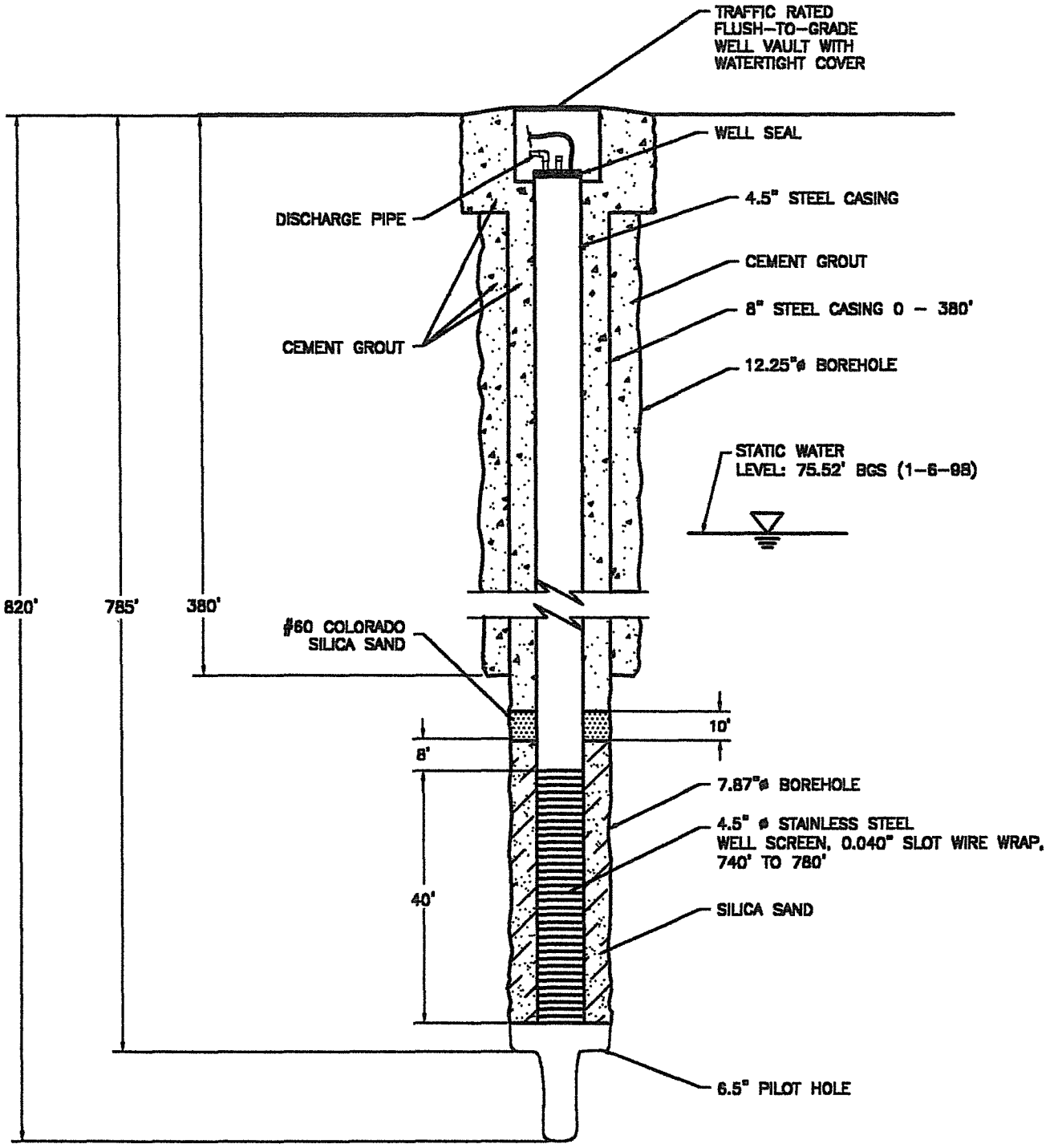

NOT TO SCALE

UNITED INDUSTRIAL CORPORATION	DATE: 7-27-98
	DESIGNED:
DEEP WELL MW-6L SECTION VIEW	CHECKED:
	APPROVED:
	DRAWN: JDD
	PROJ.: N386-113
HSI GEOTRANS A Tetra Tech Company	

../TI-REPORT/WELL-DDH.DWG

MW-6L

SOIL BOREHOLE LOG

SITE NAME AND LOCATION	DRILLING METHOD:	BORING NO.
808708313 United Industrial Corporation West Osborn Complex Phoenix, AZ	Conventional Mud Rotary 6 1/2" two cone open-faced button bit	MW6L
	SAMPLING METHOD:	SHEET 1 OF 11
	1) Drill cuttings	DRILLING
	2) Drive Samples	START / FINISH
	WATER LEVEL	TIME 0715 / TIME 0815
	TIME	
	DATE	DATE 8/21/96 / DATE 8/27/96
DATUM: APPROXIMATE ELEVATION:	CASING DEPTH	

DRILLING RIG: Gardner-Denver 1500 | SURFACE CONDITIONS: sand and gravel

ANGLE: vertical | HAMMER WEIGHT: -

SAMPLE HAMMER TORQUE: - FT.-LBS

DRILLING CONTRACTOR Stewart Bros. Drilling Co. Milan, NM

DEPTH IN FEET	Soil Graph	Inches Driven / Inches Recovered	Sample No / Sample Depth	Time to Drive Sample	FID(ppm)	SAMPLE NUMBER AND DESCRIPTION OF MATERIAL
0	SM					0-20': SILTY SAND (SM): multi-colored sand, loose, no odor; 70-80% medium to coarse-grained sand; 20-30% medium brown silt
5						
10						
15						
20	SM					20'-30': SILTY SAND (SM): medium brown, soft, no odor; 50-60% medium to coarse-grained sand; 40-50% medium brown silt
25						
30	SP					30'-60': SAND (SP): multi-colored, loose, no odor; medium to coarse-grained sand
35						
40						
45						
50						
55						
60	SP					60'-75': SAND (SP): multi-colored sand, loose, no odor; medium to coarse-grained sand; 5-10% medium brown silt
65						
70						

LOGGED BY Richard J. Johnson, III CHECKED BY Richard J. Johnson, III

DATE 8/21/96-8/27/96

SOIL BOREHOLE LOG

SITE NAME AND LOCATION	DRILLING METHOD:	BORING NO
808708313 United Industrial Corporation West Osborn Complex Phoenix, AZ	Conventional Mud Rotary 6 1/2" two cone open-faced button bit	MW6L
	SAMPLING METHOD:	SHEET 2 OF 11
	1) Drill cuttings 2) Drive Samples	DRILLING

					START	FINISH
WATER LEVEL					TIME 0715	TIME 0815
TIME						
DATE					DATE 8/21/96	DATE 8/27/96
CASING DEPTH						

DATUM: APPROXIMATE ELEVATION:

DRILLING RIG: Gardner-Denver 1500

SURFACE CONDITIONS: sand and gravel

ANGLE: vertical HAMMER WEIGHT: -

SAMPLE HAMMER TORQUE: - FT.-LBS

DEPTH IN FEET	Soil Graph	Inches Driven / Inches Recovered	Sample No / Sample Depth	Time to Drive Sample	FID(ppm)	SAMPLE NUMBER AND DESCRIPTION OF MATERIAL
75	SP					75'-85': SANDY SILT (ML): medium brown, soft, no odor; 50-60% silt; 40-50% medium to coarse-grained sand, caliche
80	ML					
85						85'-100': SAND (SP): multi-colored, loose, no odor; medium to coarse-grained sand; minor subangular gravel to 1/4"
90	SP					[Drive Sample: 90'-100': with 3-5% clay]
95						
100		16 / 15	- / 100			[Drive Sample: 100'-101.5': SAND (SW): multi-colored, wet, loose, no odor; 80-90% fine to coarse-grained sand; 5-10% subangular gravel to 3/4"; 5-10% silt]
105	SW					100'-115': SAND (SW): mulit-colored, loose, no odor; fine to coarse-grained sand
110						
115						115'-130': SAND (SW): multi-colored sand, loose, no odor; 80-90% fine to coarse-grained sand; 10-20% medium brown clay; minor subangular gravel to 1/4"
120	SW					
125						
130	CL					130'-160': SILTY CLAY (CL): medium brown, soft, no odor, minor sand
135						
140						Mud Viscosity=40 seconds
145						

DRILLING CONTRACTOR Stewart Bros. Drilling Co. Milan, NM

LOGGED BY Richard J. Johnson, III CHECKED BY Richard J. Johnson, III

DATE 8/21/96-8/27/96

SOIL BOREHOLE LOG

SITE NAME AND LOCATION	DRILLING METHOD:	BORING NO.
808708313 United Industrial Corporation West Osborn Complex Phoenix, AZ	Conventional Mud Rotary 6 1/2" two cone open-faced button bit	MW6L
	SAMPLING METHOD:	SHEET 3 OF 11
	1) Drill cuttings	DRILLING
	2) Drive Samples	START / FINISH
	WATER LEVEL / TIME / DATE / CASING DEPTH	TIME 0715 / TIME 0815 / DATE 8/21/96 / DATE 8/27/96
DATUM: APPROXIMATE ELEVATION:		

DRILLING RIG: Gardner-Denver 1500 | SURFACE CONDITIONS: sand and gravel

ANGLE: vertical | HAMMER WEIGHT: -

SAMPLE HAMMER TORQUE: - FT.-LBS

DRILLING CONTRACTOR Stewart Bros. Drilling Co. Milan, NM

DEPTH IN FEET	Soil Graph	Inches Driven / Inches Recovered	Sample No / Sample Depth	Time to Drive Sample	FID(ppm)	SAMPLE NUMBER AND DESCRIPTION OF MATERIAL
150	CL					
155						
160						160'-190': SANDY CLAY (CL): medium brown, soft, no odor: 30-40% fine to coarse-grained sand and caliche
165						
170						
175	CL					
180						
185						
190						190'-200': SANDY CLAY (CL): medium brown, soft, no odor; 40-50% fine to coarse-grained sand
195	CL					
200		24 / 12	- / 200	57"		[Drive Sample: 200'-201': SANDY GRAVEL (GW): multi-colored, wet, loose, no odor; 40-50% fine to coarse-grained sand; 40-50%
205	CL					subangular gravels to 1/2", probably settled out of drilling mud] 200'-210': SANDY CLAY (CL): same as above from 160'-190'
210						210'-220': CLAYEY GRAVEL (GC): medium brown, soft, no odor; 60-70% fine-grained sand to subangular gravels to 3/8"; 30-40% silty
215	GC					clay
220	CL					220'-350': SILTY CLAY (CL): medium brown, soft, no odor; 10-20% fine to coarse-grained sand and caliche

LOGGED BY Richard J. Johnson, III CHECKED BY Richard J. Johnson, III

DATE 8/21/96-8/27/96

SOIL BOREHOLE LOG

SITE NAME AND LOCATION	DRILLING METHOD:	BORING NO
808708313 United Industrial Corporation West Osborn Complex Phoenix, AZ	Conventional Mud Rotary 6 1/2" two cone open-faced button bit	MW6L
	SAMPLING METHOD:	SHEET 4 OF 11
	1) Drill cuttings	DRILLING
	2) Drive Samples	START / FINISH
	WATER LEVEL	TIME 0715 / TIME 0815
	TIME	
	DATE	DATE 8/21/96 / DATE 8/27/96
DATUM: APPROXIMATE ELEVATION:	CASING DEPTH	

DRILLING RIG: Gardner-Denver 1500

SURFACE CONDITIONS: sand and gravel

ANGLE: vertical HAMMER WEIGHT: -

SAMPLE HAMMER TORQUE: - FT.-LBS

DEPTH IN FEET	Soil Graph	Inches Driven / Inches Recovered	Sample No / Sample Depth	Time to Drive Sample	FID(ppm)	SAMPLE NUMBER AND DESCRIPTION OF MATERIAL
225	CL					
230						
235						
240						
245						
250						
255						
260						
265						
270						
275						
280						
285						
290						
295						

DRILLING CONTRACTOR Stewart Bros. Drilling Co. Milan, NM

LOGGED BY Richard J. Johnson, III

DATE 8/21/96-8/27/96 CHECKED BY Richard J. Johnson, III

SOIL BOREHOLE LOG

SITE NAME AND LOCATION	DRILLING METHOD:	BORING NO
808708313 United Industrial Corporation West Osborn Complex Phoenix, AZ	Conventional Mud Rotary 6 1/2" two cone open-faced button bit	MW6L
	SAMPLING METHOD:	SHEET 5 OF 11
	1) Drill cuttings	DRILLING
	2) Drive Samples	START / FINISH
	WATER LEVEL / TIME / DATE / CASING DEPTH	TIME 0715 / TIME 0815 / DATE 8/21/96 / DATE 8/27/96
DATUM: APPROXIMATE ELEVATION:		

DRILLING RIG: Gardner-Denver 1500 | SURFACE CONDITIONS: sand and gravel

ANGLE: vertical | HAMMER WEIGHT: -

SAMPLE HAMMER TORQUE: - FT.-LBS

DRILLING CONTRACTOR Stewart Bros. Drilling Co. Milan, NM

DEPTH IN FEET	Soil Graph	Inches Driven / Inches Recovered	Sample No / Sample Depth	Time to Drive Sample	FID(ppm)	SAMPLE NUMBER AND DESCRIPTION OF MATERIAL
300	CL					Mud Viscosity=68 seconds
305						
310						
315						
320						
325						
330						*Geophysical logs indicate that the sand lens extends from 340'-360'. Problems with lost circulation and a wash-out
335						zone from 351'-361' probably caused a delay in drilling cutting returns and larger volumes of sands in cuttings
340						resulting in the sand lens being logged from 350'-410'.
345						
350	SW					350'-410': SAND (SW): multi-colored, loose, no odor; fine to coarse-grained sand and angular rock fragments*
355						[350'-370': large mud loss; mixed newmud; mud viscosity =45 seconds; mixed LCM with mud; washout zone from 351'-361'
360						indicated on caliper geophysical log]
365						[Drive Sample: 371': SILTY SAND (SM): dark brown, wet, soft, no odor; 40-50% very fine sand, 40-50% silt, plus 2 large rock fragments
370		6 / 6	- / 370			1" to 1 1/2" in size]

LOGGED BY Richard J. Johnson, III CHECKED BY Richard J. Johnson, III

DATE 8/21/96-8/87/96

SOIL BOREHOLE LOG

SITE NAME AND LOCATION	DRILLING METHOD:	BORING NO.
808708313 United Industrial Corporation West Osborn Complex Phoenix, AZ	Conventional Mud Rotary 6 1/2" two cone open-faced button bit	MW6L
	SAMPLING METHOD:	SHEET 6 OF 11
	1) Drill cuttings 2) Drive Samples	DRILLING START / FINISH
	WATER LEVEL / TIME / DATE / CASING DEPTH	TIME 0715 / TIME 0815 DATE 8/21/96 / DATE 8/27/96
DATUM: APPROXIMATE ELEVATION:		

DRILLING RIG: Gardner-Denver 1500 | SURFACE CONDITIONS: sand and gravel

ANGLE: vertical | HAMMER WEIGHT: - | SAMPLE HAMMER TORQUE: - FT.-LBS

DRILLING CONTRACTOR Stewart Bros. Drilling Co. Milan, NM

DEPTH IN FEET	Soil Graph	Inches Driven / Inches Recovered	Sample No / Sample Depth	Time to Drive Sample	FID(ppm)	SAMPLE NUMBER AND DESCRIPTION OF MATERIAL
375						
380						
385						
390	SW	8 / 8	- / 390			[Drive Sample: 390': SILTY SAND (SM): medium brown, moist, soft, no odor: very fine sand; sample not representative of drill cuttings]
395						
400						[Drive Sample: 390'-410': 5-10% CLAY]
405						
410	SC					410'-420': CLAYEY SAND (SC): mulit-colored sand, soft, no odor; fine to coarse-grained sand; 20-30% medium brown clay
415						
420	GC					420'-440': CLAYEY GRAVEL (GC): medium brown, soft, no odor; 50-60% fine-grained sand to 1/4" subangular gravel; 40-50% silty clay
425						
430						
435						
440	ML					440'-530': CLAYEY SILT (ML): medium brown, no odor; 60-90% silt; 10-30% clay; clay content increasing downhole
445						

LOGGED BY Richard J. Johnson, III CHECKED BY Richard J. Johnson, III

DATE 8/21/96-8/27/96

SOIL BOREHOLE LOG

SITE NAME AND LOCATION	DRILLING METHOD:	BORING NO.
808708313 United Industrial Corporation West Osborn Complex Phoenix, AZ	Conventional Mud Rotary 6 1/2" two cone open-faced button bit	MW6L
	SAMPLING METHOD:	SHEET 7 OF 11
	1) Drill cuttings 2) Drive Samples	DRILLING START / FINISH
	WATER LEVEL / TIME / DATE / CASING DEPTH	TIME 0715 / TIME 0815 DATE 8/21/96 / DATE 8/27/96
DATUM: APPROXIMATE ELEVATION:		

DRILLING RIG: Gardner-Denver 1500 | SURFACE CONDITIONS: sand and gravel

ANGLE: vertical HAMMER WEIGHT: -

SAMPLE HAMMER TORQUE: - FT.-LBS

DRILLING CONTRACTOR Stewart Bros. Drilling Co. Milan, NM

DEPTH IN FEET	Soil Graph	Inches Driven / Inches Recovered	Sample No / Sample Depth	Time to Drive Sample	FID(ppm)	SAMPLE NUMBER AND DESCRIPTION OF MATERIAL
450	ML					
455						
460						
465						
470						
475						
480						
485						
490						
495						[Drive Sample: 495': CLAYEY SILTY SAND (SM): medium brown; 60% fine to medium-grained sand; 30% silt; 10% clay]
500						
505						
510						
515						
520						

LOGGED BY Richard J. Johnson, III CHECKED BY Richard J. Johnson, III

DATE 8/21/96-8/27/96

SOIL BOREHOLE LOG

SITE NAME AND LOCATION	DRILLING METHOD:	BORING NO.
808708313 United Industrial Corporation West Osborn Complex Phoenix, AZ	Conventional Mud Rotary 6 1/2" two cone open-faced button bit	MW6L
	SAMPLING METHOD:	SHEET 8 OF 11
	1) Drill cuttings 2) Drive Samples	DRILLING START / FINISH
	WATER LEVEL / TIME / DATE / CASING DEPTH	TIME 0715 / TIME 0815 DATE 8/21/96 / DATE 8/27/96
DATUM: APPROXIMATE ELEVATION:		

DRILLING RIG: Gardner-Denver 1500 | SURFACE CONDITIONS: sand and gravel

ANGLE: vertical HAMMER WEIGHT: -

SAMPLE HAMMER TORQUE: - FT.-LBS

DRILLING CONTRACTOR Stewart Bros. Drilling Co. Milan, NM

DEPTH IN FEET	Soil Graph	Inches Driven / Inches Recovered	Sample No / Sample Depth	Time to Drive Sample	FID(ppm)	SAMPLE NUMBER AND DESCRIPTION OF MATERIAL
525	ML					
530						530'-820': SILTY CLAY (CL): medium brown. moderately well indurated; 80-90% clay; 10-20% silt; increasing plasticity down hole
535						
540						
545						
550						
555	CL					
560						
565						
570						
575						
580						
585						
590						
595						

LOGGED BY Richard J. Johnson, III CHECKED BY Richard J. Johnson, III

DATE 8/21/96-8/27/96

SOIL BOREHOLE LOG

SITE NAME AND LOCATION	DRILLING METHOD:	BORING NO.
808708313 United Industrial Corporation West Osborn Complex Phoenix, AZ	Conventional Mud Rotary 6 1/2" two cone open-faced button bit	MW6L
	SAMPLING METHOD:	SHEET 9 OF 11
	1) Drill cuttings 2) Drive Samples	DRILLING START / FINISH
	WATER LEVEL	TIME 0715 / TIME 0815
	TIME	
	DATE	DATE 8/21/96 / DATE 8/27/96
DATUM: APPROXIMATE ELEVATION:	CASING DEPTH	

DRILLING RIG: Gardner-Denver 1500 | SURFACE CONDITIONS: sand and gravel

ANGLE: vertical HAMMER WEIGHT: -

SAMPLE HAMMER TORQUE: - FT.-LBS

DEPTH IN FEET	Soil Graph	Inches Driven / Inches Recovered	Sample No / Sample Depth	Time to Drive Sample	FID(ppm)	SAMPLE NUMBER AND DESCRIPTION OF MATERIAL
600	CL					
605						
610						
615						
620						
625						
630						
635						
640						
645						
650						
655						
660						
665						
670						

DRILLING CONTRACTOR Stewart Bros. Drilling Co. Milan, NM

LOGGED BY Richard J. Johnson, III

DATE 8/21/96-8/27/96 CHECKED BY Richard J. Johnson, III

SOIL BOREHOLE LOG

SITE NAME AND LOCATION	DRILLING METHOD:	BORING NO.
808708313 United Industrial Corporation West Osborn Complex Phoenix, AZ	Conventional Mud Rotary 6 1/2" two cone open-faced button bit	MW6L
	SAMPLING METHOD:	SHEET 10 OF 11
	1) Drill cuttings 2) Drive Samples	DRILLING START / FINISH
	WATER LEVEL / TIME / DATE / CASING DEPTH	TIME 0715 / TIME 0815 DATE 8/21/96 / DATE 8/27/96
DATUM: APPROXIMATE ELEVATION:		

DRILLING RIG: Gardner-Denver 1500

SURFACE CONDITIONS: sand and gravel

ANGLE: vertical HAMMER WEIGHT: -

SAMPLE HAMMER TORQUE: - FT.-LBS

DEPTH IN FEET	Soil Graph	Inches Driven / Inches Recovered	Sample No / Sample Depth	Time to Drive Sample	FID(ppm)	SAMPLE NUMBER AND DESCRIPTION OF MATERIAL
675	CL					
680						
685						
690						
695						
700						
705						
710						
715						
720						
725						
730						
735						
740						
745						

DRILLING CONTRACTOR Stewart Bros. Drilling Co. Milan, NM

LOGGED BY Richard J. Johnson, III

DATE 8/21/96-8/27/96 CHECKED BY Richard J. Johnson, III

SOIL BOREHOLE LOG

SITE NAME AND LOCATION	DRILLING METHOD:	BORING NO.
808708313 United Industrial Corporation West Osborn Complex Phoenix, AZ	Conventional Mud Rotary 6 1/2" two cone open-faced button bit	MW6L
	SAMPLING METHOD:	SHEET 11 OF 11
	1) Drill cuttings 2) Drive Samples	DRILLING START / FINISH
	WATER LEVEL / TIME / DATE / CASING DEPTH	TIME 0715 / TIME 0815 DATE 8/21/96 / DATE 8/27/96
DATUM: APPROXIMATE ELEVATION:		

DRILLING RIG: Gardner-Denver 1500

SURFACE CONDITIONS: sand and gravel

ANGLE: vertical HAMMER WEIGHT: -

SAMPLE HAMMER TORQUE: - FT.-LBS

DEPTH IN FEET	Soil Graph	Inches Driven / Inches Recovered	Sample No / Sample Depth	Time to Drive Sample	FID(ppm)	SAMPLE NUMBER AND DESCRIPTION OF MATERIAL
750	CL					
755						
760						
765						
770						770'-780': trace fine to medium-grained sand
775						
780						
785						
790						790'-800': trace fine to medium-grained sand
795						
800						
805						
810						
815						
820						820': TD

DRILLING CONTRACTOR Stewart Bros. Drilling Co. Milan, NM

LOGGED BY Richard J. Johnson, III

CHECKED BY Richard J. Johnson, III

DATE 8/21/96-8/27/96

ELECTRIC LOGS FOR MW-6L

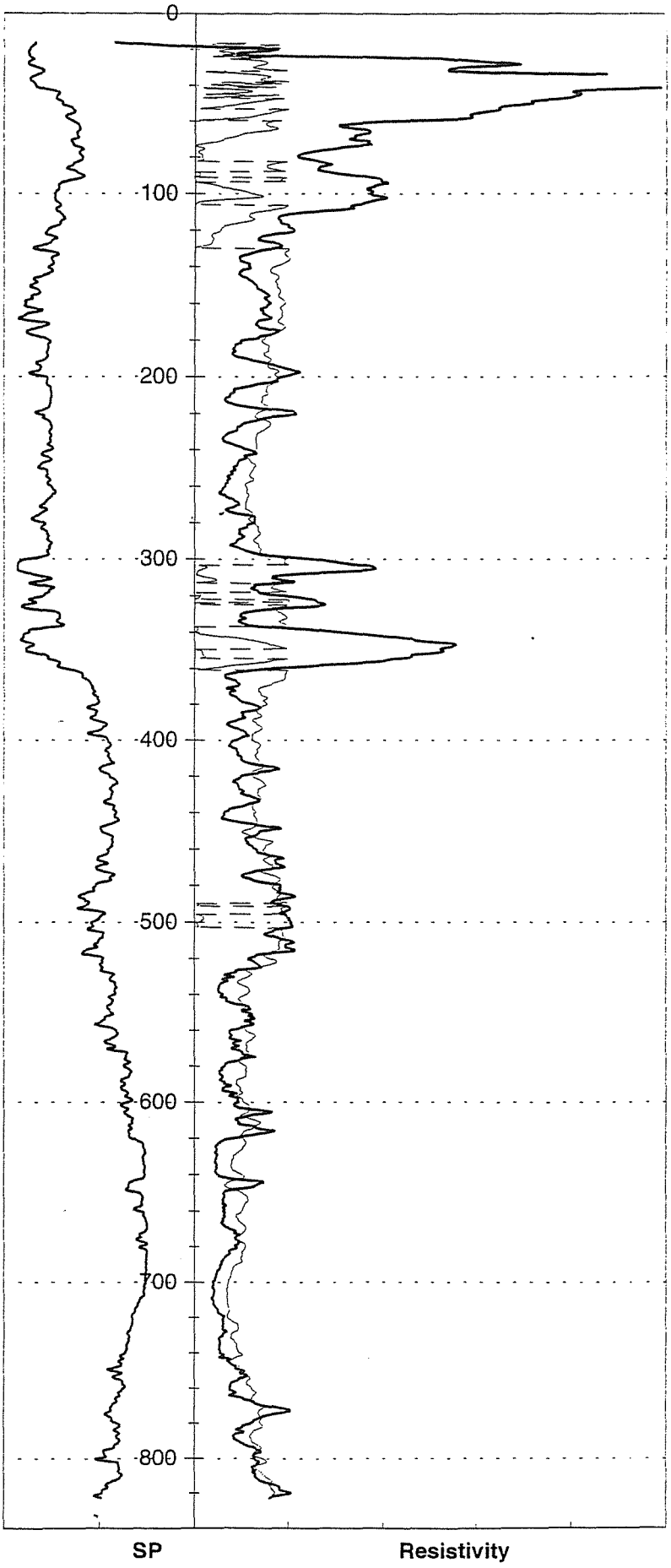

HSI GEOTRANS

NATURAL GAMMA AND NEUTRON LOG FOR MW-6L

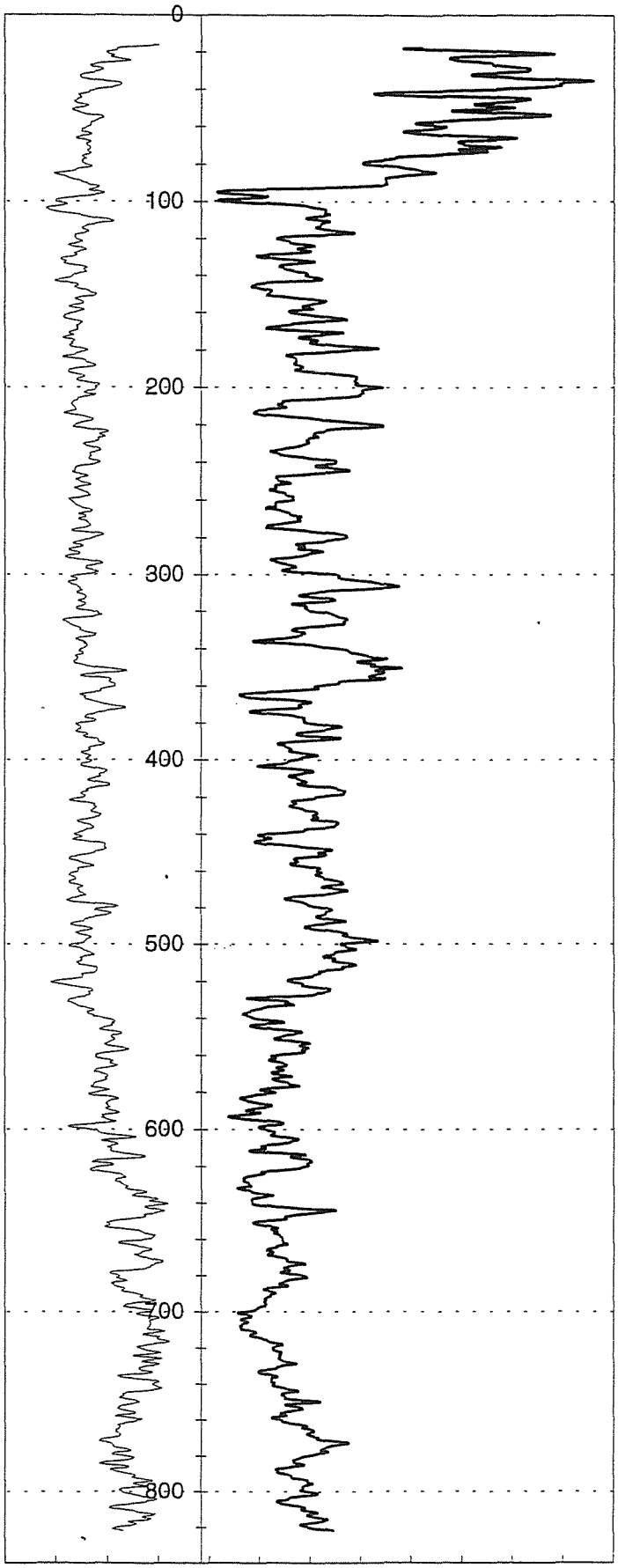

Natural Gamma

Neutron

HSI GEOTRANS

MONITOR WELL CONSTRUCTION SUMMARY

Well No. MW-6L

Boring No. X-Ref:

Map Coords: 3052 N, 3262 E

Elevation Ground Level:

Job Number: 808708313

Top of Casing: 1098.26

Drilling Summary:		Construction Time Log: **Start** 8/21/96 **Finish** 9/5/96				
Total Depth	820 feet		Date	Time	Date	Time
Borehole Diameter	7 ⅞ inches	Drilling (6 1/2")	8/21/96	0930	8/28/96	0820
Casing Stick-Up	0	(12 1/4")	8/27/96	1415	8/28/96	1530
Driller	Stewart Brothers Drilling Co.	(7 ⅞")	8/30/96	1230	9/3/96	0945
1700Rig	Gardner Denver 1500					
Bit(s)	0-820 feet: 6 1/2" tricone 0-380 feet: 12 1/4" tricone 380-785 feet: 7 ⅞" tricone	Geophys. Logging	8/27/96	1000	8/27/96	1230
Drilling Fluid	Bentonite mud and polymers	Casing: 8 ⅝"	8/29/96	0900	8/29/96	1500
Protective Casing	None	Casing: 4 ½"	9/3/96	1230	9/3/96	2045
Comments:						
		Sand Pack:	9/4/96	0900	9/4/96	1530
		Cementing:	9/4/96	1530	9/5/96	1100
		Development:				

Site Name: West Osborn Complex

Location: 39th Avenue and Earll Drive

Well Design & Specifications

Basis: Geologic Log x Geophysical Log x

Casing String(s): C = Casing S = Screen

Well Development:

Depth (ft)	String (C1, S1, etc.)	Elevation (ft)
0 to 380	C1- 8" LCS	
0 to 740	C2- 4.5" LCS	
740-780	S1 - 4.5" stainless steel	

Casing:	C1	8 5/8" Low carbon steel blank casing 0.188 wall
	C2	4.5" Low carbon steel blank casing 0.188 wall
Screen:	S1	4.5 " Stainless steel, 0.040" slot wire wrap
	S2	
Filter Pack:		732'-785': 8-12 Colorado silica sand.
Grout Seal:		0-772': neat cement with 3.5% bentonite; 0-360': neat
		cement with 3.5% bentonite on outside of 8 5/8" surface casing
Seal:		732'-722' #60 Colorado silica sand

Stabilization Test Data:

Time	pH	Spec. Cond. µs/m	Temp (C)

Pumped

Supervised By: David Broermann

Date:

STATE OF ARIZONA
DEPARTMENT OF WATER RESOURCES
GROUNDWATER MANAGEMENT SUPPORT SECTION
MAIL TO: P.O. BOX 458, PHOENIX, ARIZONA 85001-0458
500 NORTH THIRD STREET, PHOENIX, ARIZONA 85004-3903
PHONE (602) 417-2470 FAX (602) 417-2422

RECEIVED
JUN 28 1996
GROUNDWATER MGT

NOTICE OF INTENTION TO DRILL MONITOR/PIEZOMETER WELL

PLEASE READ GENERAL INSTRUCTIONS ON REVERSE SIDE OF THIS FORM BEFORE COMPLETING.

Section §45-596, Arizona Revised Statues provide: Prior to drilling a monitor or piezometer well, a Notice of Intention to Drill shall be filed with the Department.

1 Well/Land Location:

2N (Township) 2E (Range) 27 (Section)

NW ¼ (10 Acre) SW ¼ (40 Acre) SE ¼ (160 Acre)

2. Position location of the well on the land:

Latitude 33 o 28 ' 58 "

Longitude 112 o 08 ' 34 "

3. County: Maricopa

4. Owner of the land of wellsite:

City of Phoenix
Name
200 West Washington
Address
Phoenix (City) Az. (Sate) 85003 (Zip)

Telephone Number 261-8812

5. Lessee of the land of wellsite:

NA
Name

Address

City Sate Zip

Telephone Number

6. Owner of well:

United Industrial Corporation
Name
4636 East University
Address
Phoenix (City) Az (State) 85034 (Zip)

Phone Number (602) 894-2800

7. Consulting firm:

Hydro-Search, Inc.
Name
David Broermann
Contact Person
(602) 894-2800
Phone Number

8. Purpose of well drilled pursuant to this notice:

Monitor XXXXXX
Piezometer

9. If for deepening or modifying, list well registration number:

55-

FOR DEPARTMENT USE ONLY

File No. A(2-2)27dcB
Filed 6-28-96 By
Input By

DUPLICATE
Mailed 7-9-96 By
Registration 55- 558698
AMA/INA PNC
W/S 07 S/B 04

10. Will this proposed well be associated with a permit: Yes ___ No XX
If yes, Permit No.

11. Construction will start:

July (Month) 30 (Day) 1996 (Year)

12. Period well will remain in use:

10 ~~Month~~/Years

13. For monitoring wells, is pump equipment to be installed?

Yes XXXX No

(a) If yes, design pump capacity:

10 - 15 GPM

(b) What use will be made of the water:

Sampled and disposed

14. Drilling Firm:

Stewart Brothers Drilling Co.
Name

P.O. Box 2067
Address

Milans (City) NM (State) 87021 (Zip)

1-505-287-2986
Telephone Number

314
DWR License Number

A-4
ROC License Category

15. Proposed method of abandonment of well after project is completed: In accordance with A.A.C. R12-15-811, pursuant to R12-15-816

16. Is this well to monitor existing contamination? _____ **Potential contamination** XX **.Please explain:** Monitor wells will monitor potential-existing contamination previously identified in other monitor wells.

I state that this Notice is filed in compliance with Rule A.A.C. R12-15-809 and R12-15-816(F), and is complete and correct to the best of my knowledge and belief and that I understand the limitations and conditions set forth on the reverse side of this form.

FRANK M. ALES — **Typed or Printed Name**

Frank M. Ales — **Signature [✓] Land Owner [ ] Lessee of Wellsite**

7/2/96 — **Date**

17. **If construction plans have been coordinated with Arizona Department of Environmental Quality, who is the agency contact?** Ms. Ana Vargus

If construction plans have been coordinated with Arizona Department of Water Resources, who is the agency contact? None

18. **WELL CONSTRUCTION PLAN:**

a) Drilling method (mud rotary, hollow-stem auger, etc.) Mud Rotary

b) Borehole diameters: 12 inches from 0 feet to 250 feet.
7 7/8 inches from 250 feet to 800 feet.

c) Casing materials (PVC, steel, hollow-stem auger, etc.)

material Schedule 40 low carbon steel diameter 8 inches from 2 feet to 250 feet.
material Schedule 40 low carbon steel diameter 4 inches from 1.5 feet to 760 feet.

d) Method of sealing at reductions grout seal

e) Annular seal materials (cement, grout, etc.); method of placement (tremied, circulated):

material cement grout method tremied from 0 feet to 748 feet.
material bentonite method tremied from 748 feet to 753 feet.

f) Filter packs (state material):
material silica sand from 753 feet to 800 feet.
material _____ from _____ feet to _____ feet.

g) Perforation or screen specification:

type 4-Inch, type 304 stainless steel from 760 feet to 800 feet.
type _____ from _____ feet to _____ feet.

h) Method of well development (bail, air lift, surge) Air-lift, jet, surge and pump

i) Will surface or conductor casing extend above grade? Yes XX No _____

19. **Include detailed construction diagram showing expected water depth in feet below land surface, and details of vault, if specified.**

GENERAL INSTRUCTION

1. **Please submit two original notices, with original signatures, and check or money order (no cash) in the amount of $ 10.00, to P.O. Box 458, Phoenix, Arizona 85001-0458 or hand deliver to 500 North Third Street, Phoenix, Arizona 85004-3903.**

CONDITIONS

1. **If an individual other than the land owner or lessee, signs this notice, an original letter of authorization from the land owner/lessee, stating that the individual has permission to sign this specific Notice on their behalf, shall accompany the Notice of Intention to Drill a Monitor/Piezometer Well form.**

2. **Construction and abandonment standards for all wells shall be in accordance with A.A.C. R12-15-811 and R12-15-816.**

3. **Drilling of the well shall be completed within one year after the date of Notice.**

4. **A Well Driller Report is required within thirty days of completion of drilling. A Completion Report is required to be filed with the Department within thirty days after installation of pump equipment for monitor wells.**

5. **Pump equipment may not be installed on a well drilled for piezometer purposes. If a monitor will is pumped, pumping is limited to the maximum amount required for monitor purposes, but in no case may exceed 35 gallons per minute and an annual volume of 10 acre feet total.**

6. **A.A.C. Rule R12-15-811.H.2, requires that: "A monitor well shall be identified as such on the vault cover or at the top of the steel casing. Identification information will include well registration number."**

7. **Special construction standards, required pursuant to A.A.C. Rule R12-15-821:** _____

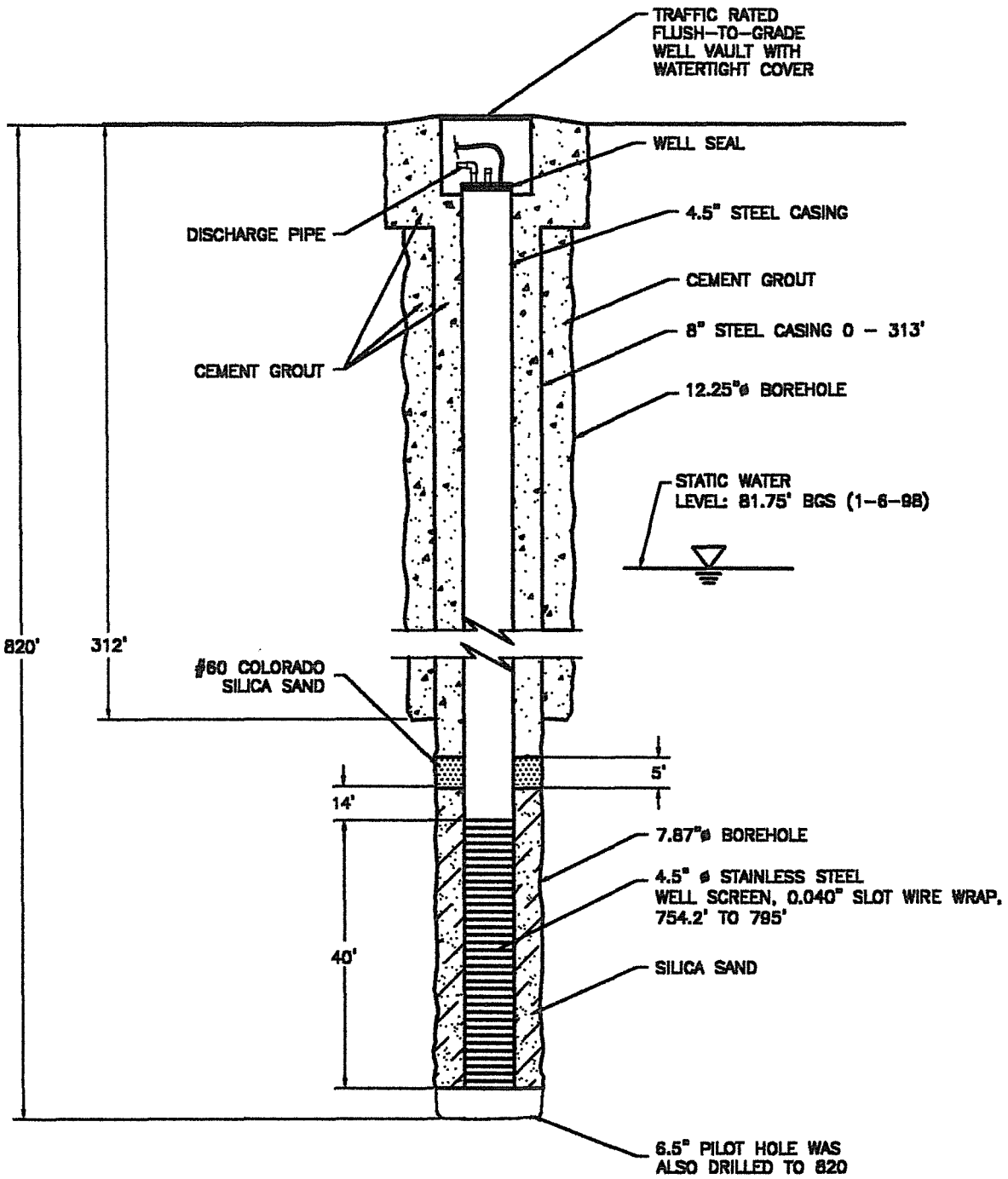

NOT TO SCALE

UNITED INDUSTRIAL CORPORATION	DATE: 7-27-98
DEEP WELL MW-7L SECTION VIEW	DESIGNED:
	CHECKED:
	APPROVED:
	DRAWN: JDD
	PROJ.: N386-113
HSI GEOTRANS A Tetra Tech Company	

.../RI-REPORT/WELL-007L.DWG

MW-7L

SOIL BOREHOLE LOG

SITE NAME AND LOCATION	DRILLING METHOD:	BORING NO.
808708313 United Industrial Corporation West Osborn Complex Phoenix, AZ	Conventional Mud; 6.5" open-faced two cone bit and 6.5" open-faced tricone	MW-7 L
	SAMPLING METHOD:	SHEET 1 OF 11
	1) Drill Cuttings	DRILLING
	2) Drive Samples	START / FINISH
	WATER LEVEL / TIME / DATE / CASING DEPTH	TIME 1315 / TIME 1445 / DATE 7/17/96 / DATE 7/29/96
DATUM: APPROXIMATE ELEVATION:		

DRILLING CONTRACTOR Stewart Bros. Drilling Co. Milan, NM

DRILLING RIG: Gardner-Denver 1500

SURFACE CONDITIONS:

ANGLE: vertical HAMMER WEIGHT: -

SAMPLE HAMMER TORQUE: - FT.-LBS

DEPTH IN FEET	Soil Graph	Inches Driven / Inches Recovered	Sample No / Sample Depth	Time to Drive Sample	FID(ppm)	SAMPLE NUMBER AND DESCRIPTION OF MATERIAL
0	SW					0-18': GRAVELLY SAND (SW): white and light brown sediment, dry, loose, no odor; 80-90% medium to coarse-grained sand; 10-20%
5						subanguiar gravel to 1/2"
10						
15						
20	GC					18'-30': CLAYEY SANDY GRAVEL (GC): medium brown, dry, soft, no odor; 60-70% coarse-grained sand to subangular gravel up to
25		24 / 24	1 / 22	NA	0	1"; 30-40% clay
30						
35	SW					30'-40': same as 0-18'; multi-colored sediments
40		24 / 14	2 / 40	NA	0	40'-50': GRAVELLY SAND (SW): multi-colored, moist, loose, no odor; 50-60% medium to fine-grained sand; 40-50% subangular to
45	SW					subrounded gravels to 1'
50						
55	CL					50'-61': SILTY CLAY (CL): medium brown, soft, no odor, minor sand and gravel
60		24 / 24	3 / 60	NA	0	
65	GW					61'-70': SANDY GRAVEL (GW): multi-colored, moist, loose, no odor; 50-60% subangular to subrounded gravel to 3/4"; 40-50% medium to
70	CL					coarse-grained sand

LOGGED BY Richard J. Johnson, III CHECKED BY

DATE 7/17/96

SOIL BOREHOLE LOG

SITE NAME AND LOCATION	DRILLING METHOD:	BORING NO.
808708313 United Industrial Corporation West Osborn Complex Phoenix, AZ	Conventional Mud; 6.5" open-faced two cone bit and 6.5" open-faced tricone	MW-7 L
	SAMPLING METHOD:	SHEET 2 OF 11
	1) Drill Cuttings	DRILLING
	2) Drive Samples	START / FINISH
	WATER LEVEL / TIME / DATE / CASING DEPTH	TIME 1315 / TIME 1445 / DATE 7/17/96 / DATE 7/29/96
DATUM: APPROXIMATE ELEVATION:		

DRILLING RIG: Gardner-Denver 1500

SURFACE CONDITIONS:

ANGLE: vertical HAMMER WEIGHT: -

SAMPLE HAMMER TORQUE: - FT.-LBS

DEPTH IN FEET	Soil Graph	Inches Driven / Inches Recovered	Sample No / Sample Depth	Time to Drive Sample	FID(ppm)	SAMPLE NUMBER AND DESCRIPTION OF MATERIAL
75						70'-100': SILTY CLAY (CL): medium brown, soft, no odor; minor sand and gravel
80	CL	24 / 24	4 / 80	NA	0	80': drive sample moist
85						
90						
95						
100	SM	24 / 24	- / 100	NA	NA	100': drive sample wet [Drive Sample: 100'-102': SILTY SAND (SM): medium brown, wet, soft, no odor; 70-80% fine-grained sand; 20-30% silt]
105	ML					
110						102'-110': SILT (ML): medium brown, soft, no odor; minor fine-grained sand
115	CL					110'-125': SILTY CLAY (CL): medium brown, soft, no odor; 20-30% medium-grained sand to subangular gravel to 1/4"
120						Mud Viscosity=43 seconds
125		24 / 24	- / 125	NA	0	[Drive Sample: 125'-127': same as 110'-125' with minor sand]
130	SC					127'-135': CLAYEY SAND (SC): medium brown, loose, no odor; 70-80% medium to coarse-grained sand; 20-30% clay
135						135'-150': SILTY CLAY (CL): light brown, soft, no odor; 20-30% medium to coarse-grained sand
140	CL					
145						

DRILLING CONTRACTOR Stewart Bros. Drilling Co. Milan, NM

LOGGED BY Richard J. Johnson, III CHECKED BY

DATE 7/17/96

SOIL BOREHOLE LOG

SITE NAME AND LOCATION	DRILLING METHOD:	BORING NO.	
808708313 United Industrial Corporation West Osborn Complex Phoenix, AZ	Conventional Mud; 6.5" open-faced two cone bit and 6.5" open-faced tricone	MW-7 L	
	SAMPLING METHOD:	SHEET 3 OF 11	
	1) Drill Cuttings 2) Drive Samples	DRILLING	
		START	FINISH
	WATER LEVEL / TIME	TIME 1315	TIME 1445
	DATE / CASING DEPTH	DATE 7/17/96	DATE 7/29/96
DATUM: APPROXIMATE ELEVATION:			

DRILLING RIG: Gardner-Denver 1500

ANGLE: vertical HAMMER WEIGHT: -

SAMPLE HAMMER TORQUE: - FT.-LBS

SURFACE CONDITIONS:

DRILLING CONTRACTOR Stewart Bros. Drilling Co. Milan, NM

DEPTH IN FEET	Soil Graph	Inches Driven / Inches Recovered	Sample No / Sample Depth	Time to Drive Sample	FID(ppm)	SAMPLE NUMBER AND DESCRIPTION OF MATERIAL
150	CL	24 / 24	- / 150	3'23"	NA	150'-155': SILTY CLAY (CL): same as 135'-150', with 10-20% fine-grained sand
155	CL					155'-210': SILTY CLAY (CL) and CALICHE: medium brown, soft, no odor; 20-30% medium to coarse-grained angular sands: caliche
160						sands resemble weathered rock
165						
170	CL					
175		8 / 8	- / 175	4'30"	NA	[Drive Sample: 175': SILTY CLAY and SANDY CALICHE discernable in drive sample, but during conventional drilling the
180						cuttings are a mixture of SILTY CLAY]
185						
190						
195						
200		18 / 13	- / 200	3'30"	NA	
205						
210						210'-225': SILTY CLAY (CL): medium brown, soft, no odor; minor sand
215	CL					
220						

LOGGED BY Richard J. Johnson, III CHECKED BY

DATE 7/17/96

SOIL BOREHOLE LOG

SITE NAME AND LOCATION	DRILLING METHOD	BORING NO
808708313 United Industrial Corporation West Osborn Complex Phoenix, AZ	Conventional Mud; 6.5" open-faced two cone bit and 6.5" open-faced tricone	MW-7 L
	SAMPLING METHOD: 1) Drill Cuttings 2) Drive Samples	SHEET 4 OF 11
		DRILLING START / FINISH
	WATER LEVEL / TIME / DATE / CASING DEPTH	TIME 1315 / TIME 1445
DATUM: APPROXIMATE ELEVATION:		DATE 7/17/96 / DATE 7/29/96

DRILLING RIG: Gardner-Denver 1500

ANGLE: vertical HAMMER WEIGHT: -

SAMPLE HAMMER TORQUE: - FT.-LBS

SURFACE CONDITIONS:

DRILLING CONTRACTOR Stewart Bros. Drilling Co. Milan, NM

DEPTH IN FEET	Soil Graph	Inches Driven / Inches Recovered	Sample No / Sample Depth	Time to Drive Sample	FID(ppm)	SAMPLE NUMBER AND DESCRIPTION OF MATERIAL
225	CL / GC	10 / 6	- / 225	3'00"	NA	225'-230'?: CLAYEY SANDY GRAVEL: (GC): medium brown, soft, no odor; 30-40% subrounded to subangular gravel to 3/4"; 30-40%
230						fine to coarse-grained sand: 20-30% clay
235						230'-240': Driller missed sample 230?'-250': SILTY CLAY (CL): same as 210'-225'
240	CL					
245						Mud Viscosity=45 seconds 250': new bit 6 1/2" tricone
250		10 / 5	- / 250	5'00"	NA	[Drive Sample: 250'-251': SAND (SP): gray-brown, loose, no odor; fine-grained sand]
255	CL					250'-260': GRAVELLY CLAY (CL): medium brown, soft, no odor; 20-30% medium-grained sand to subangular gravel to 1/2"
260						260'-270': SAND (SW): multi-colored, loose, no odor; fine to coarse-grained sand, 10-20% clay
265	SW					
270						270'-280': SANDY GRAVEL (GW): multi-colored, loose, no odor; medium-grained sand to angular gravel to 1/2"; 20-30% clay
275	GW	18 / 9	- / 275	3'45"	NA	[Drive Sample: SAND (SP): fine-grained sand]
280						280'-294': SANDY GRAVEL (GW): multi-colored, loose, no odor; 50-60% angular to subangular gravels to 3/4"; 40-50% medium to
285	GW					coarse-grained sand
290						
295	CL					294'-310': SILTY CLAY (CL): medium brown, soft, no odor; minor sand

LOGGED BY Richard J. Johnson, III CHECKED BY

DATE 7/17/96

SOIL BOREHOLE LOG

TE NAME AND LOCATION	DRILLING METHOD:	BORING NO.	
808708313 United Industrial Corporation West Osborn Complex Phoenix, AZ	Conventional Mud; 6.5" open-faced two cone bit and 6.5" open-faced tricone	MW-7 L	
	SAMPLING METHOD:	SHEET 5 OF 11	
	1) Drill Cuttings	DRILLING	
	2) Drive Samples	START	FINISH
	WATER LEVEL	TIME 1315	TIME 1445
	TIME		
	DATE	DATE 7/17/96	DATE 7/29/96
DATUM: APPROXIMATE ELEVATION:	CASING DEPTH		

DRILLING RIG: Gardner-Denver 1500

ANGLE: vertical HAMMER WEIGHT: -

SAMPLE HAMMER TORQUE: - FT.-LBS

SURFACE CONDITIONS:

DRILLING CONTRACTOR Stewart Bros. Drilling Co. Milan, NM

DEPTH IN FEET	Soil Graph	Inches Driven / Inches Recovered	Sample No / Sample Depth	Time to Drive Sample	FID(ppm)	SAMPLE NUMBER AND DESCRIPTION OF MATERIAL
300	CL	15 / 24	- / 300	5'5"	NA	Mud Viscosity=31 seconds, Weight=8.8 ppg
305						[Drive Sample: 300'-301.5': SAND (SP), SANDY CLAY. and CLAY (at shoe end)]
310	CL					310'-320': SANDY CLAY (CL): medium brown, soft, no odor; 70-80% silty clay; 20-30% medium to coarse-grained sand
315						
320						320'-350': SILTY CLAY (CL): medium brown, stiff, no odor
325		20 / 24	- / 325	4'15"	NA	
330	CL					
335						
340						
345						
350		8 / 8	- / 350	5'5"	NA	350'-400': SILTY CLAY (CL): medium brown, soft, no odor; 20-30% medium to coarse-grained sand and caliche fragments
355	CL					
360						
365						
370						

LOGGED BY Richard J. Johnson, III CHECKED BY

DATE 7/17/96

SOIL BOREHOLE LOG

SITE NAME AND LOCATION 808708313 United Industrial Corporation West Osborn Complex Phoenix, AZ	DRILLING METHOD: Conventional Mud: 6.5" open-faced two cone bit and 6.5" open-faced tricone	BORING NO. MW-7 L
	SAMPLING METHOD: 1) Drill Cuttings 2) Drive Samples	SHEET 6 OF 11
	WATER LEVEL / TIME / DATE / CASING DEPTH	DRILLING START: TIME 1315, DATE 7/17/96 FINISH: TIME 1445, DATE 7/29/96
DATUM: APPROXIMATE ELEVATION:		
DRILLING RIG: Gardner-Denver 1500	SURFACE CONDITIONS:	
ANGLE: vertical HAMMER WEIGHT: -		
SAMPLE HAMMER TORQUE: - FT.-LBS		

DRILLING CONTRACTOR Stewart Bros. Drilling Co. Milan, NM

DEPTH IN FEET	Soil Graph	Inches Driven / Inches Recovered	Sample No / Sample Depth	Time to Drive Sample	FID(ppm)	SAMPLE NUMBER AND DESCRIPTION OF MATERIAL
375	CL	18 / 18	- / 375	1'30"	NA	[Drive Sample: 375'-376': SANDY CLAY (CL): medium brown, stiff, no odor; 376'-376.5': SAND (SP): fine-grained sand lens]
380						
385						
390						[390'-400': 20-30% fine to coarse-grained sand in silty clay matrix]
395						
400		14 / 18	- / 400	4'30"	NA	400'-420': SANDY CLAY (CL): medium brown, soft, no odor; 30-40% fine-grained sand
405						
410	CL					[410'-420': light brown, probably from sandy caliche]
415						
420						420'-475': SILTY CLAY (CL): medium brown, soft, no odor; 10-30% very fine-grained sand; caliche fragments
425		13 / 13	- / 425	5'00"	NA	[Drive Sample: 425'-426.5': SANDY CLAY (CL): medium brown, medium stiff; 50-60% silty clay; 40-50% very fine-grained sand]
430	CL					
435						
440						
445						

LOGGED BY Richard J. Johnson, III CHECKED BY

DATE 7/17/96

SOIL BOREHOLE LOG

SITE NAME AND LOCATION	DRILLING METHOD:	BORING NO.
808708313 United Industrial Corporation West Osborn Complex Phoenix, AZ	Conventional Mud; 6.5" open-faced two cone bit and 6.5" open-faced tricone	MW-7 L
	SAMPLING METHOD:	SHEET 7 OF 11
	1) Drill Cuttings	DRILLING
	2) Drive Samples	START / FINISH
	WATER LEVEL	TIME 1315 / TIME 1445
	TIME	
	DATE	DATE 7/17/96 / DATE 7/29/96
DATUM: APPROXIMATE ELEVATION:	CASING DEPTH	

DRILLING RIG: Gardner-Denver 1500

ANGLE: vertical HAMMER WEIGHT: -

SAMPLE HAMMER TORQUE: - FT.-LBS

SURFACE CONDITIONS:

DEPTH IN FEET	Soil Graph	Inches Driven / Inches Recovered	Sample No / Sample Depth	Time to Drive Sample	FID(ppm)	SAMPLE NUMBER AND DESCRIPTION OF MATERIAL
450		13 / 13	- / 450	4'05"	NA	[Drive Sample: 450'-451': SILTY CLAY (CL): same as above at 420'-475']
455						
460	CL					
465						
470						
475		9 / 8	- / 475	4'32"	NA	475'-495': SILTY CLAY (CL): medium brown, soft, no odor; minor fine-grained sand
480						
485	CL					
490						
495						495'-500': SANDY CLAY (CL): medium brown, soft, no odor; 30-40% medium-grained sand to gravel-sized fragments of siltstone to 1/2"
500	CL	8 / 24	- / 500	4'36"	NA	500'-600': SILTY CLAY (CL): medium brown, soft, no odor; minor fine grained sand
505						
510	CL					
515						
520						

DRILLING CONTRACTOR Stewart Bros. Drilling Co. Milan, NM

LOGGED BY Richard J. Johnson, III CHECKED BY

DATE 7/17/96

SOIL BOREHOLE LOG

E NAME AND LOCATION	DRILLING METHOD:	BORING NO.	
	Conventional Mud; 6.5" open-faced two cone	MW-7 L	
808708313	bit and 6.5" open-faced tricone	SHEET	
United Industrial Corporation	SAMPLING METHOD:	8 OF 11	
West Osborn Complex	1) Drill Cuttings	DRILLING	
Phoenix, AZ	2) Drive Samples	START	FINISH
	WATER LEVEL	TIME 1315	TIME 1445
	TIME		
	DATE	DATE 7/17/96	DATE 7/29/96
DATUM: APPROXIMATE ELEVATION:	CASING DEPTH		

DRILLING RIG: Gardner-Denver 1500

SURFACE CONDITIONS:

ANGLE: vertical HAMMER WEIGHT: -

SAMPLE HAMMER TORQUE: - FT.-LBS

DRILLING CONTRACTOR Stewart Bros. Drilling Co. Milan, NM

DEPTH IN FEET	Soil Graph	Inches Driven / Inches Recovered	Sample No / Sample Depth	Time to Drive Sample	FID(ppm)	SAMPLE NUMBER AND DESCRIPTION OF MATERIAL
525		24 / 24	- / 525	3'7"	NA	[Drive Sample: 525'-527': SILTY CLAY (CL): same as above at 500'-600']
530						
535						
540						
545						
550	CL	21 / 24	- / 550	1'40"	NA	[Drive Sample: 550'-552': SILTY CLAY (CL): same as above at 500'-600']
555						
560						
565						
570						
575		18 / 24	- / 575	1'12"	NA	[Drive Sample: 575'-577': SILTY CLAY (CL): same as above at 500'-600']
580						
585						
590						
595						

LOGGED BY Richard J. Johnson, III CHECKED BY

DATE 7/17/96

SOIL BOREHOLE LOG

E NAME AND LOCATION	DRILLING METHOD:	BORING NO.	
808708313 United Industrial Corporation West Osborn Complex Phoenix, AZ	Conventional Mud; 6.5' open-faced two cone bit and 6.5" open-faced tricone	MW-7 L	
	SAMPLING METHOD:	SHEET 9 OF 11	
	1) Drill Cuttings	DRILLING	
	2) Drive Samples	START	FINISH
	WATER LEVEL / TIME	TIME 1315	TIME 1445
	DATE	DATE 7/17/96	DATE 7/29/96
DATUM: APPROXIMATE ELEVATION:	CASING DEPTH		

DRILLING RIG: Gardner-Denver 1500

ANGLE: vertical HAMMER WEIGHT: -

SAMPLE HAMMER TORQUE: - FT.-LBS

SURFACE CONDITIONS:

DEPTH IN FEET	Soil Graph	Inches Driven / Inches Recovered	Sample No / Sample Depth	Tiem to Drive Sample	FID(ppm)	SAMPLE NUMBER AND DESCRIPTION OF MATERIAL
600	CL					[Drive Sample: 600'-602': CLAY (CL): dark brown, very stiff, no odor; minor fine-grained sand]
605	CL					602'-625': CLAY (CL): reddish to dark brown, soft, no odor; 10-20% silt: minor fine-grained sand: fragments of stiff, moist clay within soft clay matrix
610	CL					
615	CL					
620	CL					
625	CL	18 / 24	- / 625	1'45"	NA	[Drive Sample: 625'-627': SILTY CLAY (CL): dark brown, stiff, no odor; minor fine-grained sand]
630	CL					625'-675': SILTY CLAY (CL): dark brown, soft, no odor; minor fine-grained sand
635	CL					
640	CL					
645	CL					
650	CL	16 / 24	- / 650	3'35"	NA	[Drive Sample: 650'-652': SILTY CLAY (CL): dark brown, stiff, no odor; 20-30% very fine-grained sand]
655	CL					
660	CL					
665	CL					
670	CL					

DRILLING CONTRACTOR Stewart Bros. Drilling Co. Milan, NM

LOGGED BY Richard J. Johnson, III

DATE 7/17/96

CHECKED BY

SOIL BOREHOLE LOG

E NAME AND LOCATION	DRILLING METHOD:	BORING NO.	
808708313 United Industrial Corporation West Osborn Complex Phoenix, AZ	Conventional Mud; 6.5" open-faced two cone bit and 6.5" open-faced tricone	MW-7 L	
	SAMPLING METHOD:	SHEET 10 OF 11	
	1) Drill Cuttings	DRILLING	
	2) Drive Samples	START	FINISH
	WATER LEVEL	TIME 1315	TIME 1445
	TIME		
	DATE	DATE 7/17/96	DATE 7/29/96
DATUM: APPROXIMATE ELEVATION:	CASING DEPTH		

DRILLING RIG: Gardner-Denver 1500

ANGLE: vertical HAMMER WEIGHT: -

SAMPLE HAMMER TORQUE: - FT.-LBS

SURFACE CONDITIONS:

DRILLING CONTRACTOR Stewart Bros. Drilling Co. Milan, NM

DEPTH IN FEET	Soil Graph	Inches Driven / Inches Recovered	Sample No / Sample Depth	Time to Drive Sample	FID(ppm)	SAMPLE NUMBER AND DESCRIPTION OF MATERIAL
675	CL	18 / 24	- / 675	1'18"	NA	[Drive Sample: 675'-677': see below at 675'-755']
680						675'-755': CLAYEY SILT (ML): dark brwon, medium stiff, no odor; 20-30% very fine-grained sand
685						
690						
695	ML					
700		18 / 24	- / 700	48"	NA	[Drive Sample: 700'-702': same as above at 675'-755']
705						
710						
715						
720						
725		6 / 4	- / 725	3'58"	NA	[Drive Sample: 725'-725.5': same as above at 675'-755']
730						
735						Mud Viscosity=40 seconds, Weight=9.2 ppg; diluted and mixed mud
740						
745						

LOGGED BY Richard J. Johnson, III CHECKED BY

DATE 7/17/96

SOIL BOREHOLE LOG

SITE NAME AND LOCATION	DRILLING METHOD:	BORING NO.
808708313 United Industrial Corporation West Osborn Complex Phoenix, AZ	Conventional Mud; 6.5" open-faced two cone bit and 6.5" open-faced tricone	MW-7 L
	SAMPLING METHOD:	SHEET 11 OF 11
	1) Drill Cuttings 2) Drive Samples	DRILLING START / FINISH

WATER LEVEL					TIME	TIME
TIME					1315	1445
DATE					DATE	DATE
CASING DEPTH					7/17/96	7/29/96

DATUM: APPROXIMATE ELEVATION:

DRILLING RIG: Gardner-Denver 1500

ANGLE: vertical HAMMER WEIGHT: -

SAMPLE HAMMER TORQUE: - FT.-LBS

SURFACE CONDITIONS:

DRILLING CONTRACTOR Stewart Bros. Drilling Co. Milan, NM

DEPTH IN FEET	Soil Graph	Inches Driven / Inches Recovered	Sample No / Sample Depth	Time to Drive Sample	FID(ppm)	SAMPLE NUMBER AND DESCRIPTION OF MATERIAL
750	ML	9 / 12	- / 750	3'50"	NA	[Drive Sample: 750'-751': CLAYEY SILT (ML): same as above at 675'-755']
755	ML					755': Drilling rate increased 755'-775': CLAYEY SILT (ML): dark brown, soft, no odor; 40-50%
760	ML					medium to coarse-grained sand within silt matrix; sand probably interbedded
765	ML					
770	ML					
775	ML	16 / 11	- / 775	1'55"	NA	[Drive Sample: 775'-776': CLAYEY SILT (ML): medium brown, medium stiff, no odor; 20-30% fine-grained sand; minor
780	CL					coarse-grained sand]
785	CL					776'-800': SILTY CLAY (CL): brown, stiff, no odor; <10% fine to coarse-grained angular sand, 10-40% silt
790	CL					
795	CL					
800	CL	NS				800'-820': No sample. Driller miscounted rods and thought he was drilling fill
805	ML					
810	ML					
815	ML	NA / NA	- / 820		NA	[Drive Sample: 820': CLAYEY SANDY SILT (ML): light brown, medium stiff, no odor; <10% fine to coarse-grained angular sand,
820	ML					20-30% clay] TD=820'

LOGGED BY Richard J. Johnson, III CHECKED BY

DATE 7/17/96

ELECTRIC LOGS FOR MW-7L

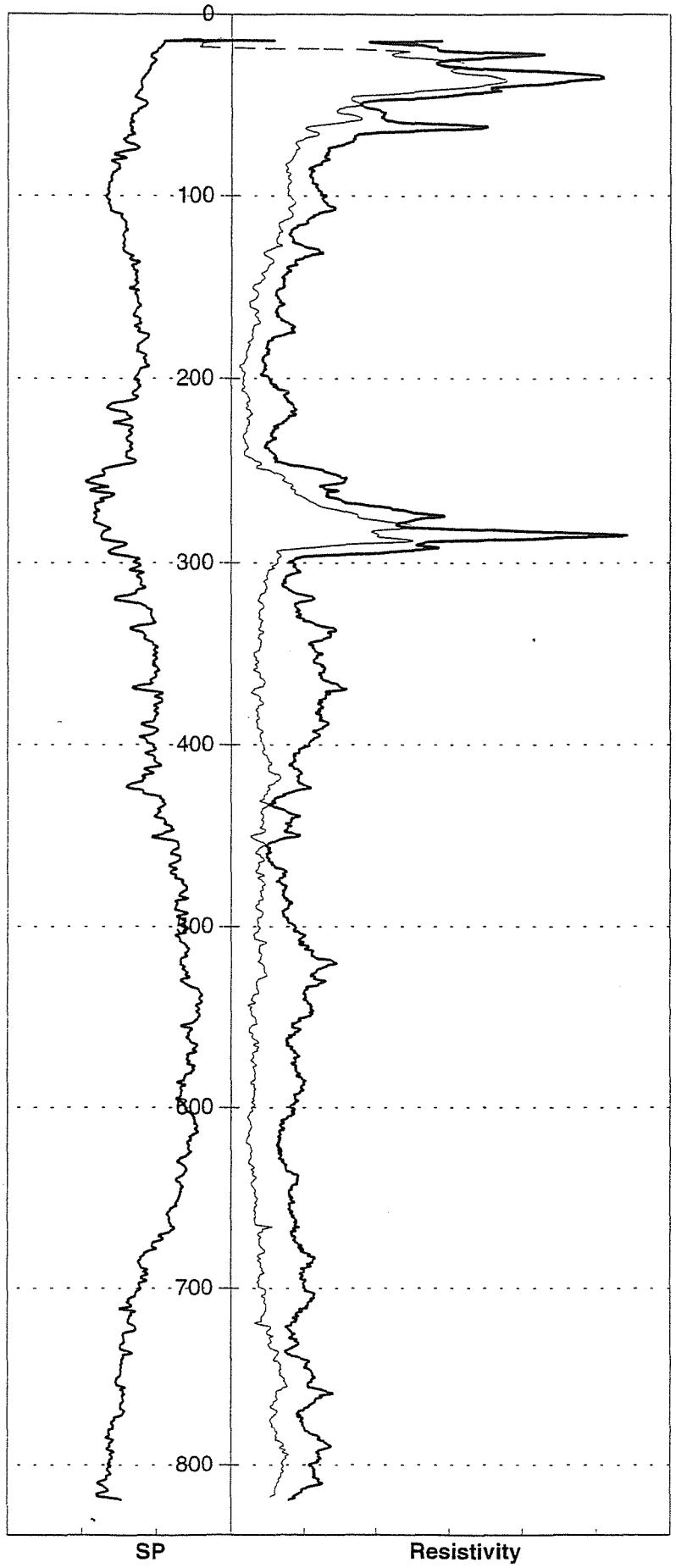

HSI GEOTRANS

NATURAL GAMMA AND NEUTRON LOG FOR MW-7L

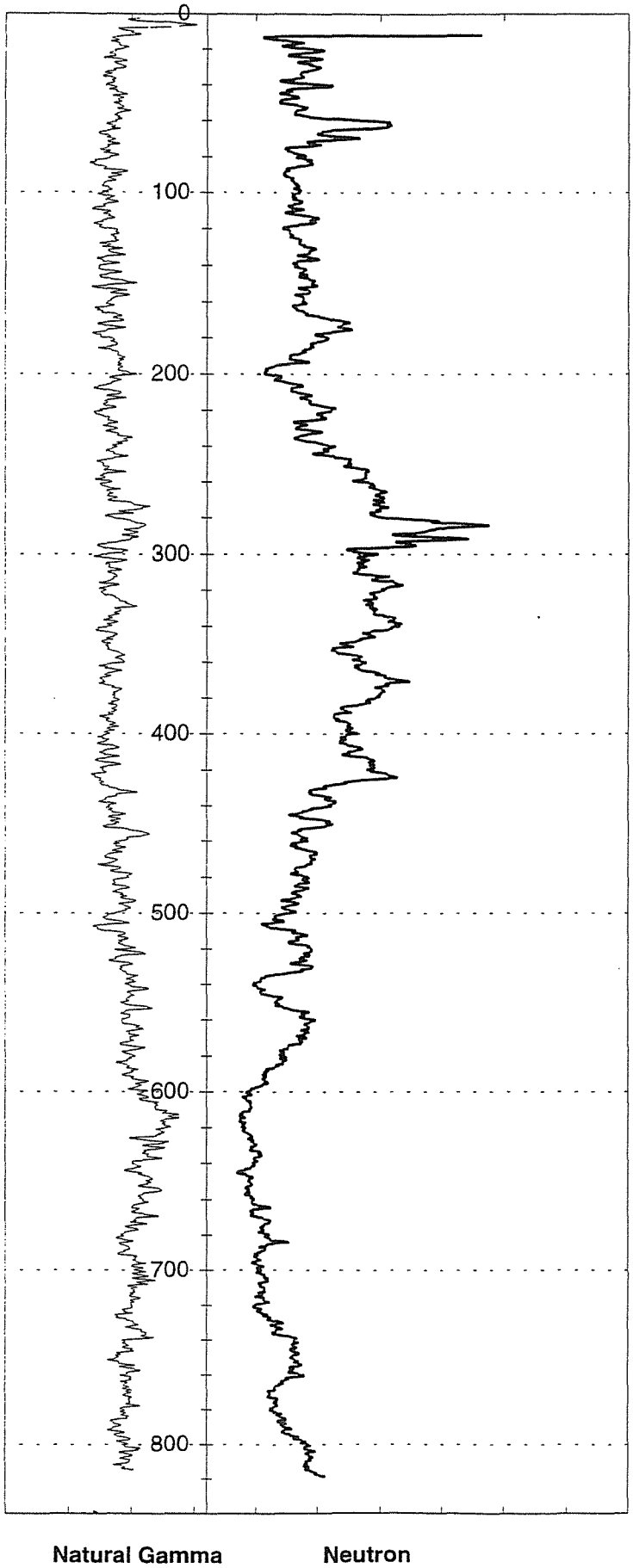

HSI GEOTRANS

MONITOR WELL CONSTRUCTION SUMMARY

Well No. MW-7L

Boring No. X-Ref:

Map Coords: 4876 N, 3674 E

Elevation Ground Level:

Job Number: 808708313

Top of Casing: 1105.39

Drilling Summary:		Construction Time Log: **Start** 7/17/96 **Finish** 8/21/96				
Total Depth	820 feet		Date	Time	Date	Time
Borehole Diameter	7 ⅞ inches	Drilling (6 1/2")	7/17/96	1315	7/29/96	1200
Casing Stick-Up	0	(12 1/4")	7/30/96	1115	7/31/96	1045
Driller	Stewart Brothers Drilling Co.	(7 ⅞")	8/2/96	0730	8/2/96	1400
1700Rig	Gardner Denver 1500					
Bit(s)	0-820 feet: 6 1/2" tricone 0-312 feet: 12 1/4" tricone 312-820 feet: 7 ⅞" tricone	Geophys. Logging	7/29/96	1445	7/29/96	1710
Drilling Fluid	Bentonite mud and polymers	Casing: 8 ⅝"	7/31/96	1200	8/1/966	1320
Protective Casing	None	Casing: 4 ½"	8/5/96	1525	8/5/96	2040
Comments: surface casing cemented from 1' to 313' bgs; 730'-735': neat cement						
plug with 3% calcium						
		Sand Pack:	8/6/96	0900	8/6/96	1555
		Cementing:	8/7/96	1500	8/7/96	1710
		Development:	8/20/96	1043	8/21/96	1520

Well Design & Specifications

Basis: Geologic Log x Geophysical Log x

Casing String(s): C = Casing S = Screen

Well Development: Drilling fluid thinned in borehole during well construction; bailed 200 gallons of water and drilling mud; swabbed into well screen; airlifted 3100 gallons of water from 310' bgs

Depth (ft)	String (C1, S1, etc.)	Elevation (ft)
0 to 313	C1- 8" LCS	
0 to 754.2	C2- 4.5" LCS	
754.2-795	S1 - 4.5" stainless steel	

Casing:	C1	8 5/8" Low carbon steel blank casing 0.188 wall
	C2	4.5" Low carbon steel blank casing 0.188 wall
Screen:	S1	4.5 " Stainless steel, 0.040" slot wire wrap
	S2	
Filter Pack:		740'-805': 8-12 Colorado silica sand.
Grout Seal:		1-735': neat cement with 3.5% bentonite; 1'-313': neat
		cement on outside of 8⅝" surface casing
Seal:		735'-740' #60 Colorado silica sand

Stabilization Test Data:

Time	pH	Spec. Cond. μs/m	Temp (C)
1501	8.18	740	----
1512	8.27	810	36
1520	8.19	810	37

Pumped

Site Name: West Osborn Complex

Location: Issac's Pueblo del Sol Middle School 3449 N. 39th Avenue

Supervised By: David Broermann

Date:

STATE OF ARIZONA
DEPARTMENT OF WATER RESOURCES
GROUNDWATER MANAGEMENT SUPPORT SECTION
MAIL TO: P.O. BOX 458, PHOENIX, ARIZONA 85001-0458
500 NORTH THIRD STREET, PHOENIX, ARIZONA 85004-3903
PHONE (602) 417-2470 FAX (602) 417-2422

RECEIVED JUN 28 1996 GROUNDWATER MGT

NOTICE OF INTENTION TO DRILL MONITOR/PIEZOMETER WELL

PLEASE READ GENERAL INSTRUCTIONS ON REVERSE SIDE OF THIS FORM BEFORE COMPLETING.

Section §45-596, Arizona Revised Statues provide: Prior to drilling a monitor or piezometer well, a Notice of Intention to Drill shall be filed with the Department.

1 Well/Land Location:

2N (Township) 2E (Range) 27 (Section)

NW ¼ (10 Acre) SW ¼ (40 Acre) NE ¼ (160 Acre)

2. Position location of the well on the land:

Latitude 33 o 29 ' 33 "

Longitude 112 o 08 ' 34 "

3. County: Maricopa

4. Owner of the land of wellsite:

Isaac School District Number 5
Name
3348 West McDowell Road
Address
Phoenix (City) Az. (Sate) 85009 (Zip)

Telephone Number 484-4700

5. Lessee of the land of wellsite:

NA
Name

Address

City Sate Zip

Telephone Number

6. Owner of well:

United Industrial Corporation
Name
4636 East University
Address
Phoenix (City) Az (State) 85034 (Zip)

Phone Number (602) 894-2800

7. Consulting firm:

Hydro-Search, Inc.
Name
David Broermann
Contact Person
(602) 894-2800
Phone Number

8. Purpose of well drilled pursuant to this notice:

Monitor XXXXXX
Piezometer

9. If for deepening or modifying, list well registration number:

55-

FOR DEPARTMENT USE ONLY

File No. A(2-2)27ACB
Filed 6-28-96 By KB
Input By

DUPLICATE
Mailed 7-9-96 By KB
Registration 55-558666
AMA/INA PHX
W/S 07 S/B 04

10. Will this proposed well be associated with a permit: Yes ___ No XX
If yes, Permit No.

11. Construction will start:

July (Month) 15 (Day) 1996 (Year)

12. Period well will remain in use:

10 ~~Month~~/Years

13. For monitoring wells, is pump equipment to be installed?

Yes XXXX No

(a) If yes, design pump capacity:

10 - 15 GPM

(b) What use will be made of the water:

Sampled and disposed

14. Drilling Firm:

Stewart Brothers Drilling Co.
Name

P.O. Box 2067
Address

Milans (City) NM (State) 87021 (Zip)

1-505-287-2986
Telephone Number

314
DWR License Number

A-4
ROC License Category

15. Proposed method of abandonment of well after project is completed: In accordance with A.A.C. R12-15-811, pursuant to R12-15-816

16. Is this well to monitor existing contamination? _____ **Potential contamination** XX **.Please explain:** Monitor wells will monitor potential-existing contamination previously identified in other monitor wells.

I state that this Notice is filed in compliance with Rule A.A.C. R12-15-809 and R12-15-816(F), and is complete and correct to the best of my knowledge and belief and that I understand the limitations and conditions set forth on the reverse side of this form.

ARTHUR ORTIZ, JR. — Typed or Printed Name

Signature [X] Land Owner [ ] Lessee of Wellsite

6/26/96 — Date

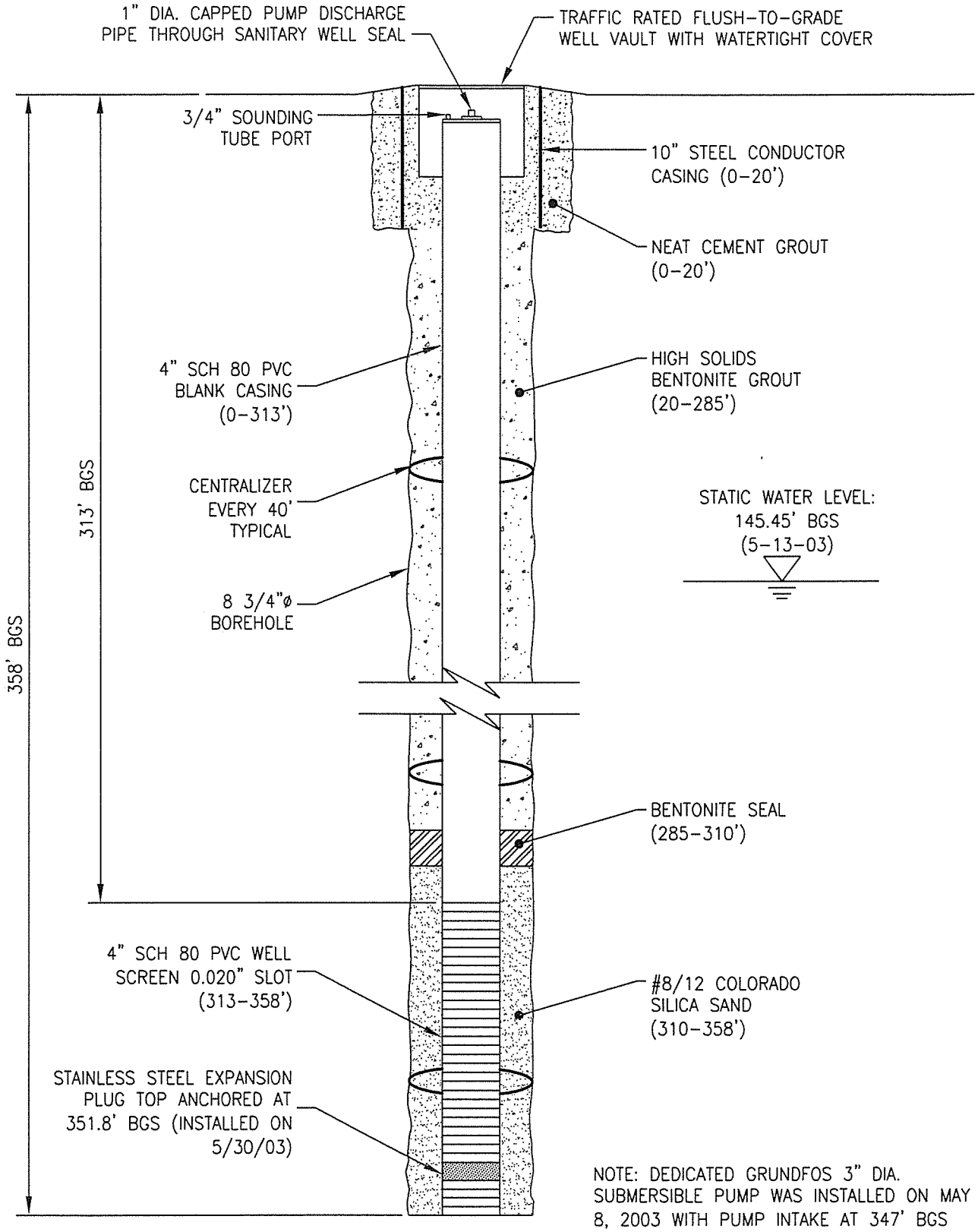

TITLE: **LSGS MONITOR WELL MW-109M CONSTRUCTION SCHEMATIC**

PROJECT: **WEST OSBORN COMPLEX WQARF AREA 47th AVENUE AND VIRGINIA AVENUE**

GeoTrans, Inc. A TETRA TECH COMPANY

CHECKED	JWR
DRAFTED	DBS
PROJECT	2209.002.03
DATE	6/25/03

FIGURE 1

GeoTrans, Inc.

GeoTrans, Inc
4665 South Ash Ave, Suite G-1
Tempe, Arizona 85282

Log of Borehole: MW-109M

Project No.: 2209.002.03

Project: U.I.C.; RI/FS of WOC

Client: U.I.C.

Lat/Lon: 33.4768 / 112.1599

Location: 47th Ave and Virginia

Project Manager: J.Rackow

SUBSURFACE PROFILE				DRILLING INFO.				
Depth (ft / m)	Symbol	Description	Elev./Depth	Rate (ft/min)	Gravel %	Fines %	Sand %	Well Completion Details
		Ground Surface	1093.0					
0		***GRAVELLY SAND*** Medium to Coarse Sand, Fine Gravel (0.5-5 cm), trace silt/clay	0.0		15	5	80	
5			1083.0					
10		***GRAVELLY SAND*** Medium to Coarse Sand, Fine Gravel (0.5-5 cm)	10.0		30	0	70	
15 (5 m)			1073.0					
20		***GRAVELLY SAND*** Sand, medium to coarse, Gravel (0.5-3 cm), some silt/clay	20.0		20	10	70	
25			1063.0					
30		***GRAVELLY CLAY*** Clay, Gravel (0.5-3 cm), some Sand	30.0		40	50	10	
35 (10 m)			1053.0					
40		***CLAYEY GRAVEL*** Gravel (0.5-3 cm), Clay	40.0		70	30	0	
45								
50 (15 m)			1043.0 / 50.0					

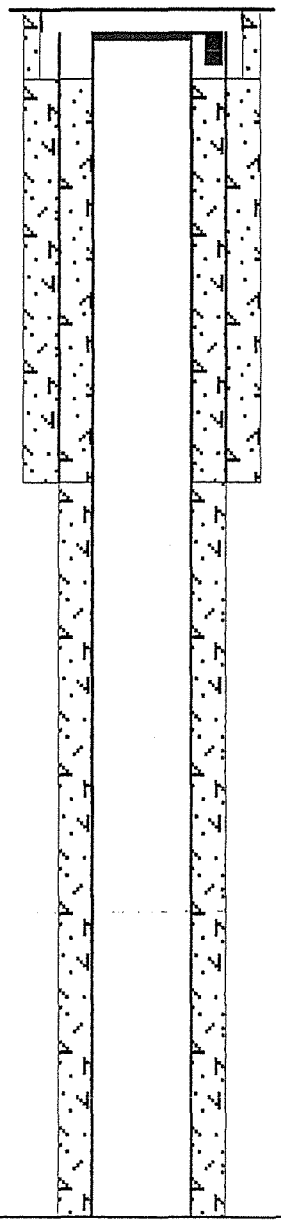

Drilled By: Stewart Bros.

Hole Size: 7 7/8 in.

Drill Method: Mud Rotary

Datum: Ground Surface

Drill Date: April 13 to 17, 2003

Sheet: 1 of 8

GeoTrans, Inc.

GeoTrans, Inc
4665 South Ash Ave, Suite G-1
Tempe, Arizona 85282

Log of Borehole: MW-109M

Project No.: 2209.002.03

Project: U.I.C.; RI/FS of WOC

Client: U.I.C.

Lat/Lon: 33.4768 / 112.1599

Location: 47th Ave and Virginia

Project Manager: J.Rackow

SUBSURFACE PROFILE				DRILLING INFO.				Well Completion Details
Depth	Symbol	Description	Elev./Depth	Rate (ft/min)	Gravel %	Fines %	Sand %	
		CLAYEY GRAVEL Gravel, Clay	1033.0		70	30	0	
		SANDY GRAVEL Gravel; Sand, fine; some Clay/Silt	60.0 / 1023.0		70	10	20	
		GRAVEL Gravel (0.5-2 cm), some sand	70.0 / 1013.0		90	0	10	
		GRAVEL Gravel (0.5-2 cm)	80.0 / 1003.0		100	0	0	
		SILTY GRAVEL Gravel (0.5-2 cm); some Silt; trace Sand, coarse	90.0 / 993.0		80	15	5	
		Logging from 100 ft to the bottom was conducted on cuttings from the shaker table outflow.	100.0					

55, 60, 65 (20), 70, 75, 80 (25), 85, 90, 95 (30), 100

Drilled By: Stewart Bros.

Hole Size: 7 7/8 in.

Drill Method: Mud Rotary

Datum: Ground Surface

Drill Date: April 13 to 17, 2003

Sheet: 2 of 8

GeoTrans, Inc.

GeoTrans, Inc
4665 South Ash Ave, Suite G-1
Tempe, Arizona 85282

Log of Borehole: MW-109M

Project No.: 2209.002.03

Project: U.I.C.; RI/FS of WOC

Client: U.I.C.

Lat/Lon: 33.4768 / 112.1599

Location: 47th Ave and Virginia

Project Manager: J.Rackow

SUBSURFACE PROFILE				DRILLING INFO.				
Depth	Symbol	Description	Elev./Depth	Rate (ft/min)	Gravel %	Fines %	Sand %	Well Completion Details
105		***SAND*** Sand, med to coarse; some Silt	983.0		0	10	90	
110		***SILTY SAND*** Sand, med to coarse; Silt and Clay	110.0 973.0		0	20	80	
115	35							
120		***SILTY SAND*** Sand, fine to med; Silt	120.0 963.0		0	30	70	
125								
130	40	***SILTY SAND*** Sand, fine to med; Silt	130.0 953.0		0	30	70	
135								
140		***SILTY SAND*** Sand, fine to med; Silt and Clay	140.0 943.0		0	40	60	
145	45							
150			150.0					

Drilled By: Stewart Bros.

Hole Size: 7 7/8 in.

Drill Method: Mud Rotary

Datum: Ground Surface

Drill Date: April 13 to 17, 2003

Sheet: 3 of 8

GeoTrans, Inc.

GeoTrans, Inc
4665 South Ash Ave, Suite G-1
Tempe, Arizona 85282

Log of Borehole: MW-109M

Project No.: 2209.002.03

Project: U.I.C.; RI/FS of WOC

Client: U.I.C.

Lat/Lon: 33.4768 / 112.1599

Location: 47th Ave and Virginia

Project Manager: J.Rackow

SUBSURFACE PROFILE				DRILLING INFO.				
Depth	Symbol	Description	Elev./Depth	Rate (ft/min)	Gravel %	Fines %	Sand %	Well Completion Details
155, 160, 165, 170, 175, 180, 185, 190, 195, 200		***CLAYEY SAND*** Sand, fine to med; Silt and Clay	933.0		0	20	80	
50		***CLAYEY SAND*** Sand, fine to med; Clay	160.0 / 923.0		0	20	80	
		SAND Sand, fine to med; some Clay	170.0 / 913.0		0	10	90	
55		***CLAYEY SAND*** Sand, fine to med; Clay	180.0 / 903.0		0	20	80	
60		***SANDY CLAY*** Clay; Sand, fine to med	190.0 / 893.0		0	50	50	
			200.0					

Drilled By: Stewart Bros.

Hole Size: 7 7/8 in.

Drill Method: Mud Rotary

Datum: Ground Surface

Drill Date: April 13 to 17, 2003

Sheet: 4 of 8

GeoTrans, Inc.

GeoTrans, Inc
4665 South Ash Ave, Suite G-1
Tempe, Arizona 85282

Log of Borehole: MW-109M

Project No.: 2209.002.03

Project: U.I.C.; RI/FS of WOC

Client: U.I.C.

Lat/Lon: 33.4768 / 112.1599

Location: 47th Ave and Virginia

Project Manager: J.Rackow

SUBSURFACE PROFILE				DRILLING INFO.				Well Completion Details
Depth	Symbol	Description	Elev./Depth	Rate (ft/min)	Gravel %	Fines %	Sand %	
		SILTY SAND Sand, fine to med; Silt	883.0		0	30	70	
		SAND Sand, fine to coarse, some clay/silt	873.0		0	10	90	
		SANDY SILT Silt; Sand, fine to med	863.0		0	70	30	
		SANDY SILT Silt; Sand, fine to coarse	853.0		0	70	30	
		SANDY CLAY Clay; some Sand, fine to med	843.0		0	80	20	
			250.0					

Depth scale: 205, 210, 215, 220, 225, 230, 235, 240, 245, 250; 65, 70, 75

Drilled By: Stewart Bros.

Hole Size: 7 7/8 in.

Drill Method: Mud Rotary

Datum: Ground Surface

Drill Date: April 13 to 17, 2003

Sheet: 5 of 8

GeoTrans, Inc.

GeoTrans, Inc
4665 South Ash Ave, Suite G-1
Tempe, Arizona 85282

Log of Borehole: MW-109M

Project No.: 2209.002.03

Project: U.I.C.; RI/FS of WOC

Client: U.I.C.

Lat/Lon: 33.4768 / 112.1599

Location: 47th Ave and Virginia

Project Manager: J.Rackow

SUBSURFACE PROFILE				DRILLING INFO.				Well Completion Details
Depth	Symbol	Description	Elev./Depth	Rate (ft/min)	Gravel %	Fines %	Sand %	
		SANDY CLAY Clay; Sand, fine to med	833.0		0	70	30	
		SANDY CLAY Clay; Sand, fine to med	260.0 / 823.0		0	60	40	
		SANDY CLAY Clay; Sand, fine to med	270.0 / 813.0		0	50	50	
		SILTY SAND Sand, fine to med; Fines	280.0 / 803.0		0	40	60	
		CLAYEY SAND Sand, fine to med; some Clay	290.0 / 793.0		0	30	70	
			300.0					

Depth scale: 255, 260, 265, 270, 275, 280, 285, 290, 295, 300

Symbol: 81, 86, 91

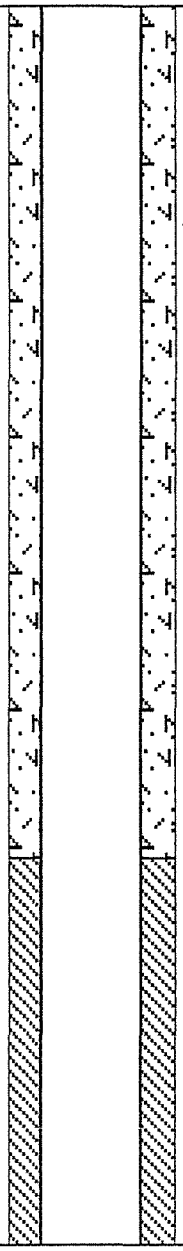

Drilled By: Stewart Bros.

Hole Size: 7 7/8 in.

Drill Method: Mud Rotary

Datum: Ground Surface

Drill Date: April 13 to 17, 2003

Sheet: 6 of 8

GeoTrans, Inc.

GeoTrans, Inc
4665 South Ash Ave, Suite G-1
Tempe, Arizona 85282

Log of Borehole: MW-109M

Project No.: 2209.002.03

Project: U.I.C.; RI/FS of WOC

Client: U.I.C.

Lat/Lon: 33.4768 / 112.1599

Location: 47th Ave and Virginia

Project Manager: J.Rackow

SUBSURFACE PROFILE				DRILLING INFO.				
Depth	Symbol	Description	Elev./Depth	Rate (ft/min)	Gravel %	Fines %	Sand %	Well Completion Details
		CLAYEY SAND Sand, fine to med; Clay	783.0		0	20	80	
		CLAYEY SAND Sand, fine to med; Clay	310.0 / 773.0		0	40	60	
		SAND Sand, fine to med; trace silt/clay	320.0 / 763.0		0	5	95	
		SAND Sand, fine to med; trace silt/clay	330.0 / 753.0		0	5	95	
		SAND Sand, fine to med	340.0 / 743.0		0	0	100	
			350.0					

305 310 315 320 325 330 335 340 345 350

96 101 106

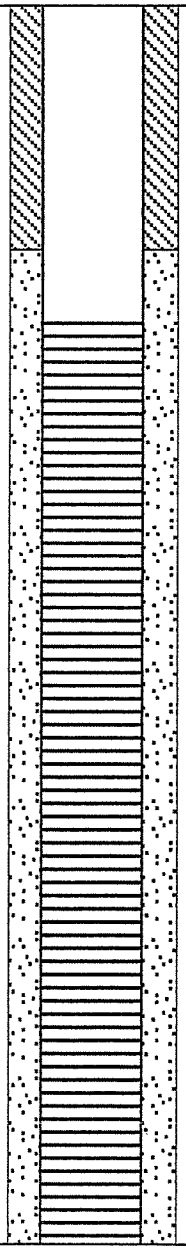

Drilled By: Stewart Bros.

Hole Size: 7 7/8 in.

Drill Method: Mud Rotary

Datum: Ground Surface

Drill Date: April 13 to 17, 2003

Sheet: 7 of 8

GeoTrans, Inc.

GeoTrans, Inc
4665 South Ash Ave, Suite G-1
Tempe, Arizona 85282

Log of Borehole: MW-109M

Project No.: 2209.002.03

Project: U.I.C.; RI/FS of WOC

Client: U.I.C.

Lat/Lon: 33.4768 / 112.1599

Location: 47th Ave and Virginia

Project Manager: J.Rackow

SUBSURFACE PROFILE				DRILLING INFO.				Well Completion Details
Depth	Symbol	Description	Elev./Depth	Rate (ft/min)	Gravel %	Fines %	Sand %	
355		***SAND*** Sand, fine to med. Stainless steel expansion plug installed at 351.8 ft bgs on May 30, 2003. Installation approved by ADEQ to mitigate damage to bottom cap.	733.0		0	0	100	
360		***GRAVELLY SAND*** Sand, fine to med; Gravel	360.0 / 729.0		30	0	70	
365 (111)		***CLAYEY SAND*** Sand, fine to med; Clay	364.0 / 723.0		0	30	70	
370		***CLAY*** Clay; some Sand, fine	370.0 / 713.0		0	90	10	
380 (116)		***SANDY CLAY*** Clay; Sand, fine to med	380.0 / 710.0		0	80	20	
			383.0					
385								
390								
395								
400 (121)								

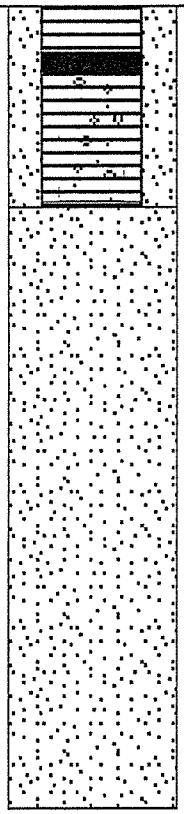

Drilled By: Stewart Bros.

Hole Size: 7 7/8 in.

Drill Method: Mud Rotary

Datum: Ground Surface

Drill Date: April 13 to 17, 2003

Sheet: 8 of 8

GeoTrans, Inc.

GeoTrans, Inc
4665 South Ash Ave, Suite G-1
Tempe, Arizona 85282

Log of Borehole: MW-110M

Project No.: 2209.002.03

Project: U.I.C.; RI/FS of WOC

Client: U.I.C.

Lat/Lon: 33.4855 / 112.1613

Location: 47th Place and Lexington

Project Manager: J.Rackow

SUBSURFACE PROFILE				DRILLING INFO.				
Depth (ft / m)	Symbol	Description	Elev./Depth	Rate (ft/min)	Gravel %	Fines %	Sand %	Well Completion Details
		Ground Surface	1100.0 / 0.0					
		SANDY GRAVEL Gravel and Sand	1080.0 / 20.0					
		GRAVELLY SAND Sand, medium to coarse, Gravel (0.5-3 cm), some silt/clay	1070.0 / 30.0		40	10	50	
		SANDY GRAVELLY CLAY Clay, Gravel (0.5-3 cm), some Sand	1060.0 / 40.0		30	50	20	
		GRAVELLY SAND Sand, fine to med; Gravel (0.5-2 cm); some Silt	1050.0 / 50.0		20	10	70	

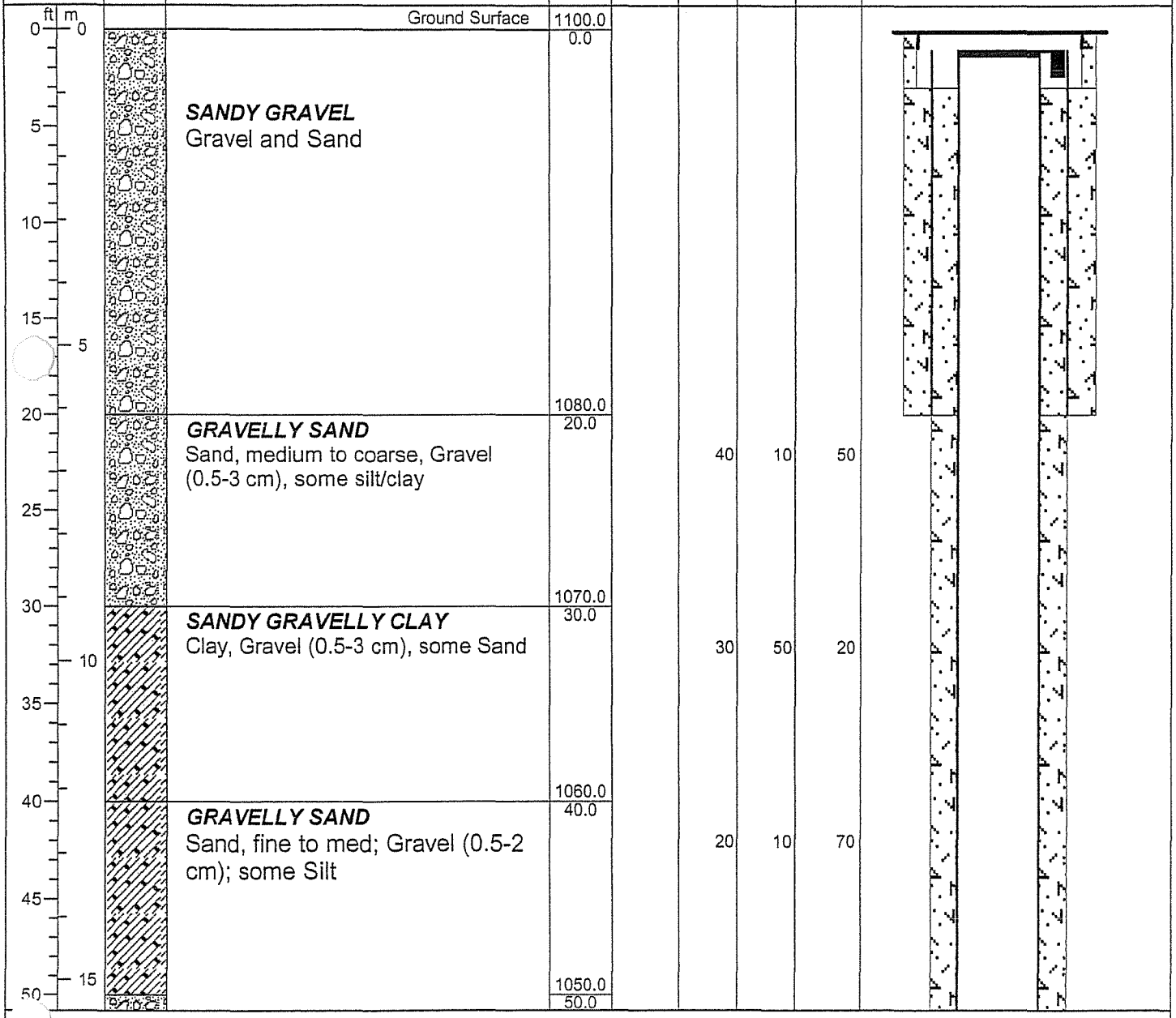

Drilled By: Stewart Bros.

Hole Size: 7 7/8 in.

Drill Method: Mud Rotary

Datum: Ground Surface

Drill Date: April 23 to 28, 2003

Sheet: 1 of 8

GeoTrans, Inc.

GeoTrans, Inc
4665 South Ash Ave, Suite G-1
Tempe, Arizona 85282

Log of Borehole: MW-110M

Project No.: 2209.002.03

Project: U.I.C.; RI/FS of WOC

Client: U.I.C.

Lat/Lon: 33.4855 / 112.1613

Location: 47th Place and Lexington

Project Manager: J.Rackow

SUBSURFACE PROFILE				DRILLING INFO.				
Depth	Symbol	Description	Elev./Depth	Rate (ft/min)	Gravel %	Fines %	Sand %	Well Completion Details
		GRAVELLY SAND Sand, fine to coarse; Gravel, angular in cuttings, trace silt/clay	1040.0		25	5	70	
		SANDY GRAVEL Gravel, angular in cuttings; Sand, fine to coarse	60.0 / 1030.0		50	0	50	
		GRAVELLY SAND Gravel (0.5-2 cm), Sand, fine to coarse	70.0 / 1020.0		30	0	70	
		SILTY GRAVELLY SAND Gravel (0.5-2 cm); Sand, silt/clay	80.0 / 1010.0		35	15	50	
		SANDY CLAYEY GRAVEL Gravel (0.5-2 cm); Clay; Sand	90.0 / 1000.0		50	30	20	
			100.0					

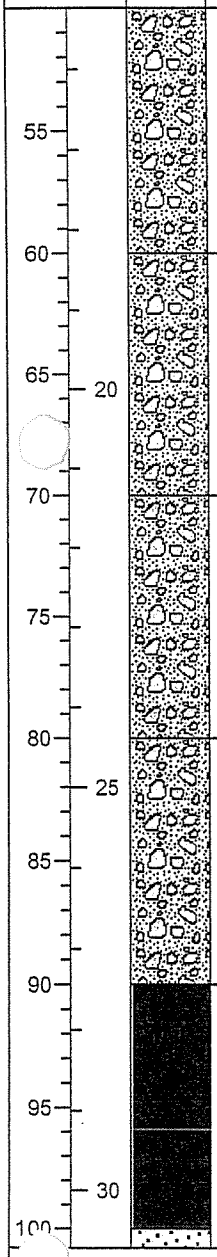

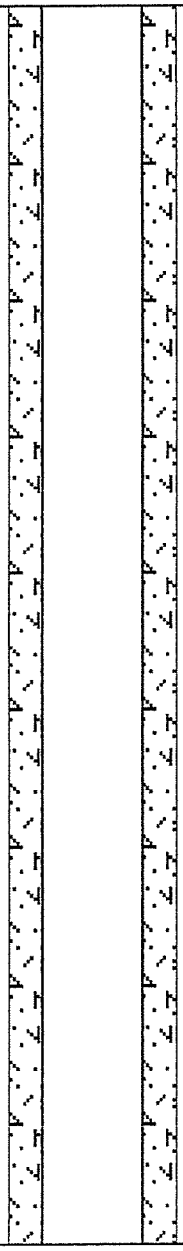

Drilled By: Stewart Bros.

Hole Size: 7 7/8 in.

Drill Method: Mud Rotary

Datum: Ground Surface

Drill Date: April 23 to 28, 2003

Sheet: 2 of 8

GeoTrans, Inc.

GeoTrans, Inc
4665 South Ash Ave, Suite G-1
Tempe, Arizona 85282

Log of Borehole: MW-110M

Project No.: 2209.002.03

Project: U.I.C.; RI/FS of WOC

Client: U.I.C.

Lat/Lon: 33.4855 / 112.1613

Location: 47th Place and Lexington

Project Manager: J.Rackow

SUBSURFACE PROFILE				DRILLING INFO.				
Depth	Symbol	Description	Elev./Depth	Rate (ft/min)	Gravel %	Fines %	Sand %	Well Completion Details
		SAND Sand, med to coarse; trace Silt	990.0		0	5	95	
		SAND Sand, fine to med;trace Silt	980.0		0	5	95	
		SILTY SAND Sand, fine to med;Silt	970.0		0	15	85	
		SAND Sand, fine to med	960.0		0	0	100	
		SILTY SAND Sand, fine to med; Silt and Clay	950.0		0	20	80	

Depth scale: 105, 110, 115 (35), 120, 125, 130 (40), 135, 140, 145 (45), 150

Elevation scale: 110.0, 120.0, 130.0, 140.0, 150.0

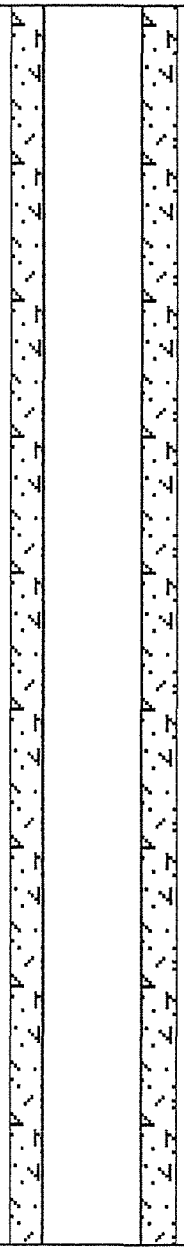

Drilled By: Stewart Bros.

Hole Size: 7 7/8 in.

Drill Method: Mud Rotary

Datum: Ground Surface

Drill Date: April 23 to 28, 2003

Sheet: 3 of 8

GeoTrans, Inc.

GeoTrans, Inc
4665 South Ash Ave, Suite G-1
Tempe, Arizona 85282

Log of Borehole: MW-110M

Project No.: 2209.002.03

Project: U.I.C.; RI/FS of WOC

Client: U.I.C.

Lat/Lon: 33.4855 / 112.1613

Location: 47th Place and Lexington

Project Manager: J.Rackow

SUBSURFACE PROFILE				DRILLING INFO.				Well Completion Details
Depth	Symbol	Description	Elev./Depth	Rate (ft/min)	Gravel %	Fines %	Sand %	
155, 160, 165, 170, 175, 180, 185, 190, 195, 200		***CLAYEY SAND*** Sand, fine to coarse; Clay	940.0 / 160.0		0	40	60	
50		***SAND*** Sand, med to coarse	930.0 / 170.0		0	0	100	
		CLAYEY SAND Sand, fine to med; Clay	920.0 / 180.0		0	40	60	
55		***CLAYEY SAND*** Sand, fine to med; Clay	910.0 / 190.0		0	15	85	
60		***SAND*** Sand, fine to med; trace Clay	900.0 / 200.0		0	5	95	

Drilled By: Stewart Bros.

Hole Size: 7 7/8 in.

Drill Method: Mud Rotary

Datum: Ground Surface

Drill Date: April 23 to 28, 2003

Sheet: 4 of 8

GeoTrans, Inc.

GeoTrans, Inc
4665 South Ash Ave, Suite G-1
Tempe, Arizona 85282

Log of Borehole: MW-110M

Project No.: 2209.002.03

Project: U.I.C.; RI/FS of WOC

Client: U.I.C.

Lat/Lon: 33.4855 / 112.1613

Location: 47th Place and Lexington

Project Manager: J.Rackow

SUBSURFACE PROFILE				DRILLING INFO.				
Depth	Symbol	Description	Elev./Depth	Rate (ft/min)	Gravel %	Fines %	Sand %	Well Completion Details
		SANDY SILT Silt; Sand, fine			0	80	20	
205								
210			890.0					
		SILTY CLAY Clay and Silt, some fine sand	210.0		0	90	10	
65								
215								
220			880.0					
		SANDY SILT Silt with fine sand; some clay	220.0		0	70	30	
225								
230			870.0					
70								
		SANDY SILT Silt; Sand, fine to med	230.0		0	70	30	
235								
240			860.0					
		CLAYEY SAND Sand, fine; Clay	240.0		0	30	70	
245								
75								
250			850.0					
			250.0					

Drilled By: Stewart Bros.

Hole Size: 7 7/8 in.

Drill Method: Mud Rotary

Datum: Ground Surface

Drill Date: April 23 to 28, 2003

Sheet: 5 of 8

GeoTrans, Inc.

GeoTrans, Inc
4665 South Ash Ave, Suite G-1
Tempe, Arizona 85282

Log of Borehole: MW-110M

Project No.: 2209.002.03

Project: U.I.C.; RI/FS of WOC

Client: U.I.C.

Lat/Lon: 33.4855 / 112.1613

Location: 47th Place and Lexington

Project Manager: J.Rackow

SUBSURFACE PROFILE				DRILLING INFO.				Well Completion Details
Depth	Symbol	Description	Elev./Depth	Rate (ft/min)	Gravel %	Fines %	Sand %	
255		***SILTY SAND*** Sand, fine; Silt	840.0		0	20	80	
260		***SILTY SAND*** Sand, fine; Silt	260.0 / 830.0		0	20	80	
265	81							
270		***SAND*** Sand, fine to med; trace silt	270.0 / 820.0		0	5	95	
275								
280		***SAND*** Sand, med; trace silt/clay	280.0 / 810.0		0	5	95	
285	86							
290		***SAND*** Sand, fine to med; some Silt	290.0 / 800.0		0	10	90	
295								
300	91		300.0					

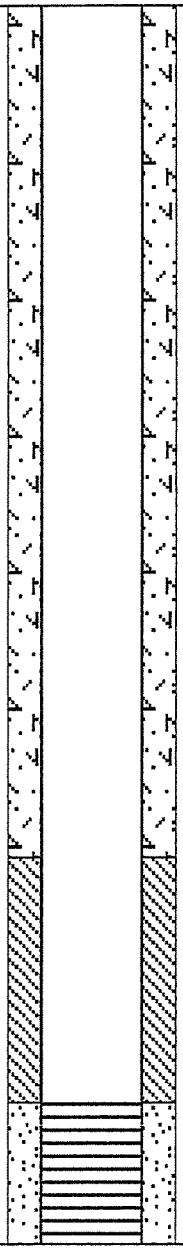

Drilled By: Stewart Bros.

Hole Size: 7 7/8 in.

Drill Method: Mud Rotary

Datum: Ground Surface

Drill Date: April 23 to 28, 2003

Sheet: 6 of 8

GeoTrans, Inc.

GeoTrans, Inc
4665 South Ash Ave, Suite G-1
Tempe, Arizona 85282

Log of Borehole: MW-110M

Project No.: 2209.002.03

Project: U.I.C.; RI/FS of WOC

Client: U.I.C.

Lat/Lon: 33.4855 / 112.1613

Location: 47th Place and Lexington

Project Manager: J.Rackow

SUBSURFACE PROFILE				DRILLING INFO.				
Depth	Symbol	Description	Elev./Depth	Rate (ft/min)	Gravel %	Fines %	Sand %	Well Completion Details
305		***SAND*** Sand, fine; some Silt	790.0		0	10	90	
310		***SILTY SAND*** Sand, fine to med; Silt	310.0 / 780.0		0	15	85	
315 – 96								
320		***SILTY SAND*** Sand, fine; Silt; some Gravel	320.0 / 770.0		10	20	70	
325								
330 – 101		***SAND*** Sand, clean, fine to coarse	330.0 / 760.0		0	0	100	
335								
340		***CLAY*** Clay; some Sand, fine to med	340.0 / 750.0		0	90	10	
345 – 106								
350			350.0					

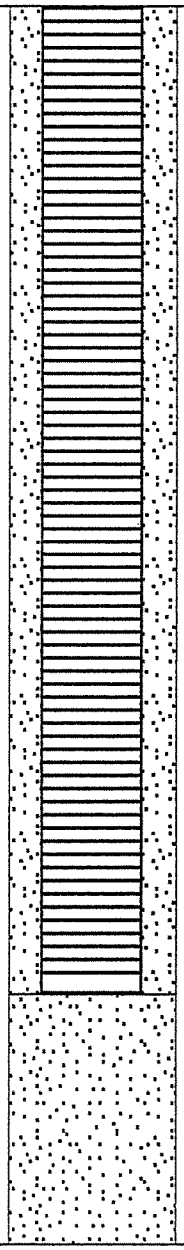

Drilled By: Stewart Bros.

Hole Size: 7 7/8 in.

Drill Method: Mud Rotary

Datum: Ground Surface

Drill Date: April 23 to 28, 2003

Sheet: 7 of 8

GeoTrans, Inc.

GeoTrans, Inc
4665 South Ash Ave, Suite G-1
Tempe, Arizona 85282

Log of Borehole: MW-110M

Project No.: 2209.002.03

Project: U.I.C.; RI/FS of WOC

Client: U.I.C.

Lat/Lon: 33.4855 / 112.1613

Location: 47th Place and Lexington

Project Manager: J.Rackow

SUBSURFACE PROFILE				DRILLING INFO.				
Depth	Symbol	Description	Elev./Depth	Rate (ft/min)	Gravel %	Fines %	Sand %	Well Completion Details
		SILT Silt; some Sand, fine			0	90	10	
355								
360			740.0 360.0					
		CLAY Clay; some Sand, fine			0	90	10	
111								
365								
370			730.0 370.0					
		CLAY Clay			0	100	0	
375								
380			720.0 380.0					
116								
385								
390								
395								
121								
400								

Drilled By: Stewart Bros.

Hole Size: 7 7/8 in.

Drill Method: Mud Rotary

Datum: Ground Surface

Drill Date: April 23 to 28, 2003

Sheet: 8 of 8

Southwest Geophysical Services, Inc.

COMPANY	GEOTRANS
WELL ID	MW-110
FIELD	PHOENIX
COUNTY	MARICOPA STATE ARIZONA

TYPE OF LOG: CALIPER-NAT. GAMMA

OTHER SERVICES

E-LOGS
GUARD RESIST

LOCATION

SEC 28 TWP 2N RGE 2E

PERMANENT DATUM		ELEVATION	K.B.
LOG MEAS. FROM	TOP OF CASING	ABOVE PERM. DATUM	D.F.
DRILLING MEAS. FROM			G.L.

DATE	4-25-03	TYPE FLUID IN HOLE	FRESH MUD
RUN No	1	SALINITY	
TYPE LOG	CALIPER NAT GAMMA	DENSITY	
DEPTH-DRILLER	380 FT	LEVEL	27 ft
DEPTH-LOGGER	383.5 FT	MAX. REC. TEMP.	
BTM LOGGED INTERVAL	383.5		
TOP LOGGED INTERVAL	SURFACE		
OPERATING RIG TIME			
RECORDED BY	A. HEDRICK		
WITNESSED BY	GEOTRANS		

RUN	BOREHOLE RECORD			CASING RECORD			
NO.	BIT	FROM	TO	SIZE	WGT.	FROM	TO
1	12 1/4"	SURFACE	20 FT	10"		SURFACE	19 FT
2	8 3/4"	20 FT	TD				

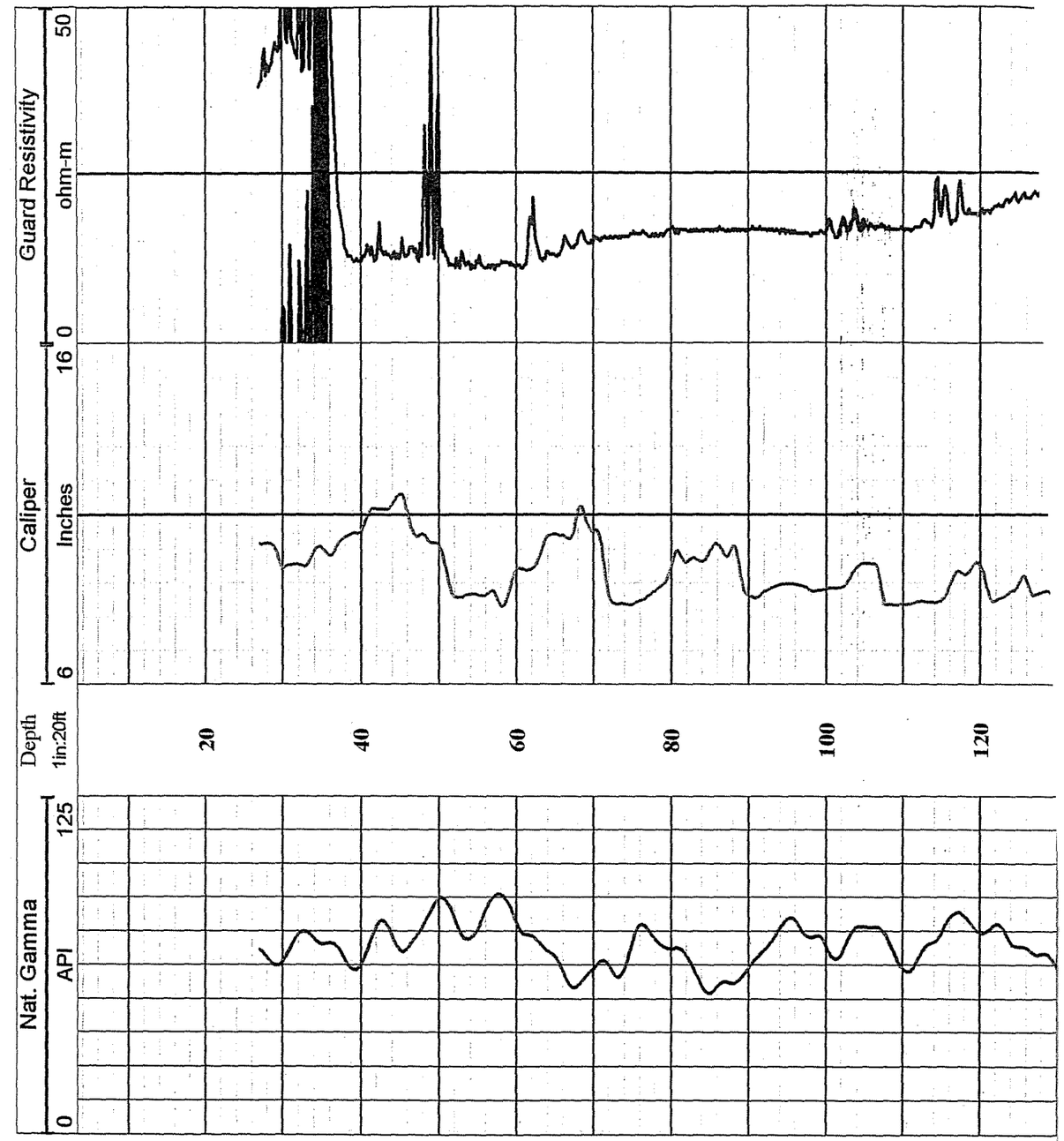

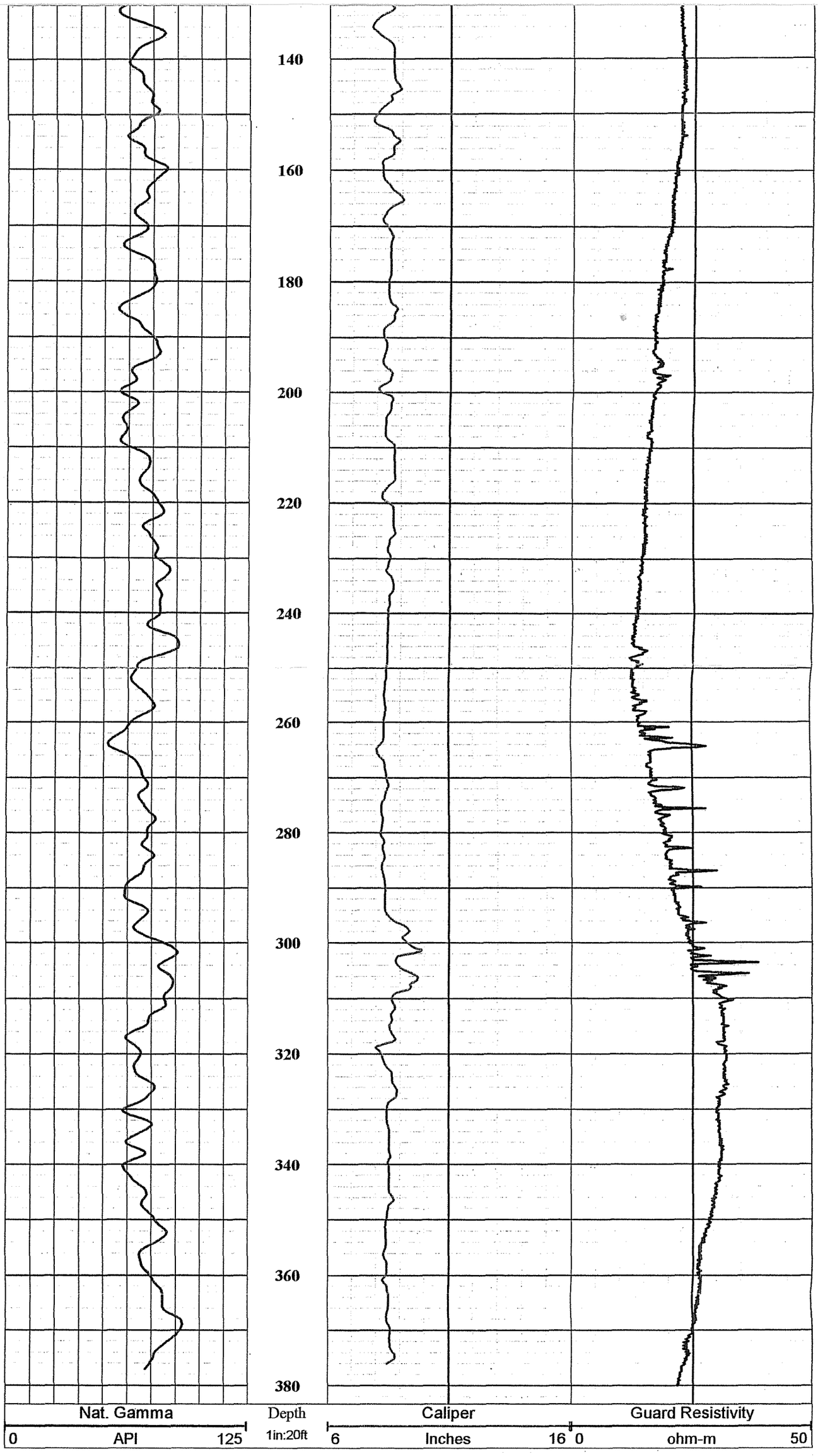
140
160
180
200
220
240
260
280
300
320
340
360
380
Nat. Gamma
0
API
125
Depth
1in:20ft
Caliper
6
Inches
16
Guard Resistivity
0
ohm-m
50

Southwest Geophysical Services, Inc.

COMPANY	GEOTRANS
WELL ID	MW-110
FIELD	PHOENIX
COUNTY	MARICOPA STATE ARIZONA

TYPE OF LOG: E-LOGS-GUARD REIST

OTHER SERVICES
CALIPER
NAT GAMMA

LOCATION

SEC 28 TWP 2N RGE 2E

IANENT DATUM		ELEVATION	K.B.
MEAS. FROM	TOP OF CASING	ABOVE PERM. DATUM	D.F.
LING MEAS. FROM			G.L.

E	4-25-03	TYPE FLUID IN HOLE	FRESH MUD
No	1	SALINITY	
LOG	E-LOGS-GUARD RESIST	DENSITY	
H-DRILLER	380 FT	LEVEL	27 FT
H-LOGGER	383.5 FT	MAX. REC. TEMP.	
LOGGED INTERVAL	383.5 FT		
LOGGED INTERVAL	SURFACE		
RATING RIG TIME			
ORDED BY	A. HEDRICK		
NESSED BY	GEOTRANS		

BOREHOLE RECORD			CASING RECORD			
BIT	FROM	TO	SIZE	WGT.	FROM	TO
12 1/4	SURFACE	20	10"		SURFACE	19 FT
8 3/4	20 FT	TD				

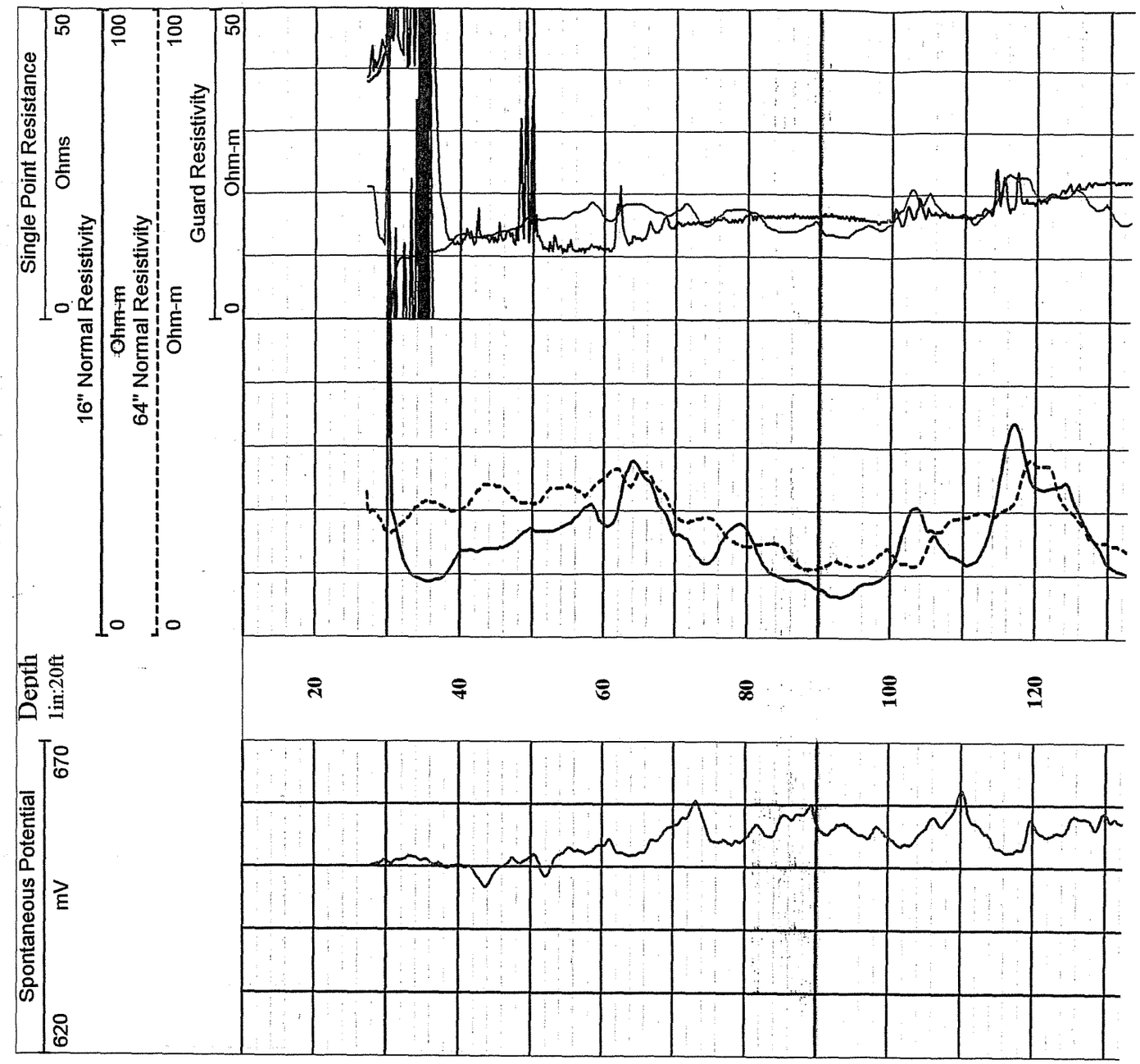

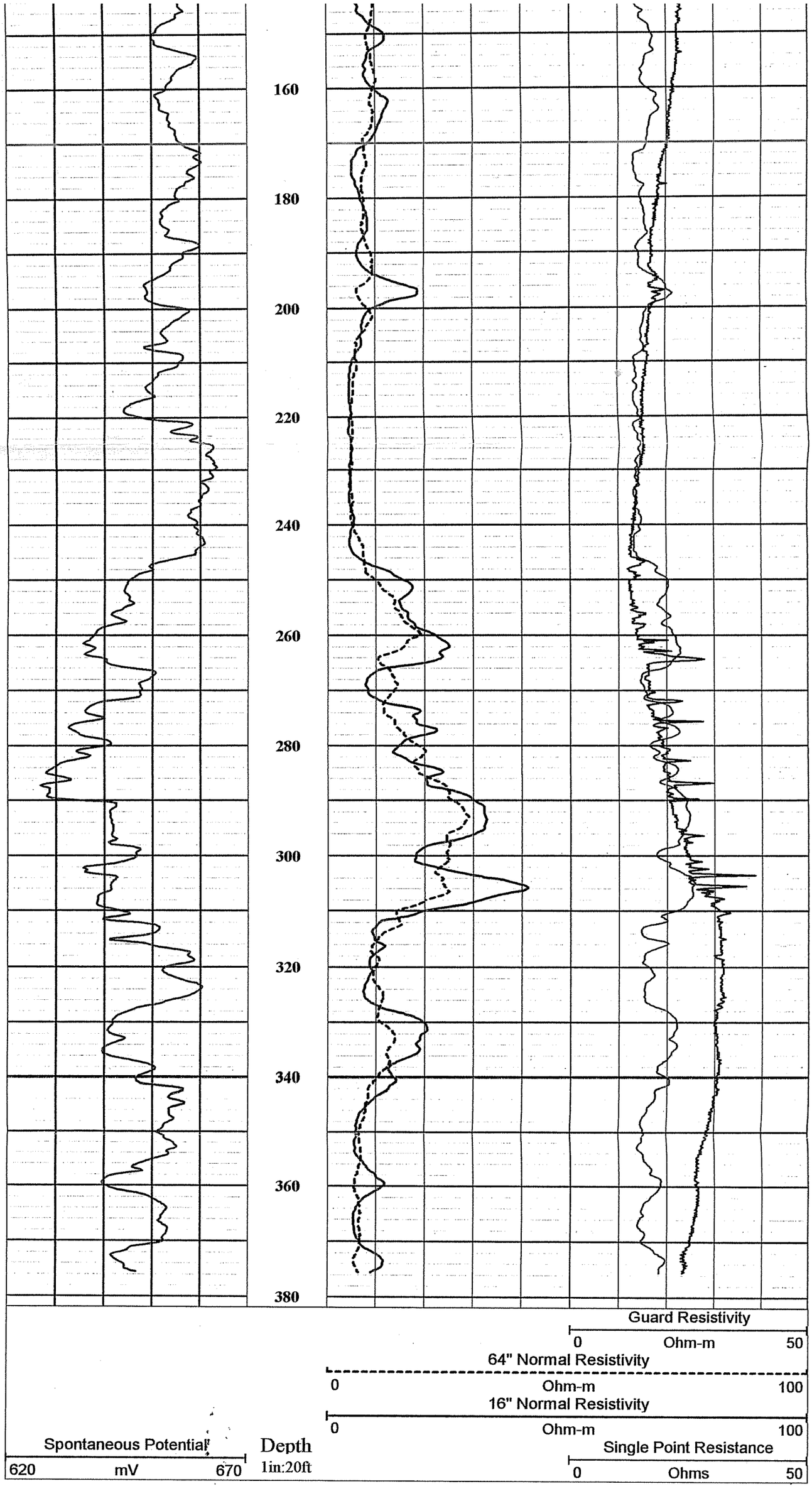
160
180
200
220
240
260
280
300
320
340
360
380
Guard Resistivity
0 Ohm-m 50
64" Normal Resistivity
0 Ohm-m 100
16" Normal Resistivity
0 Ohm-m 100
Spontaneous Potential
620 mV 670
Depth
1in:20ft
Single Point Resistance
0 Ohms 50

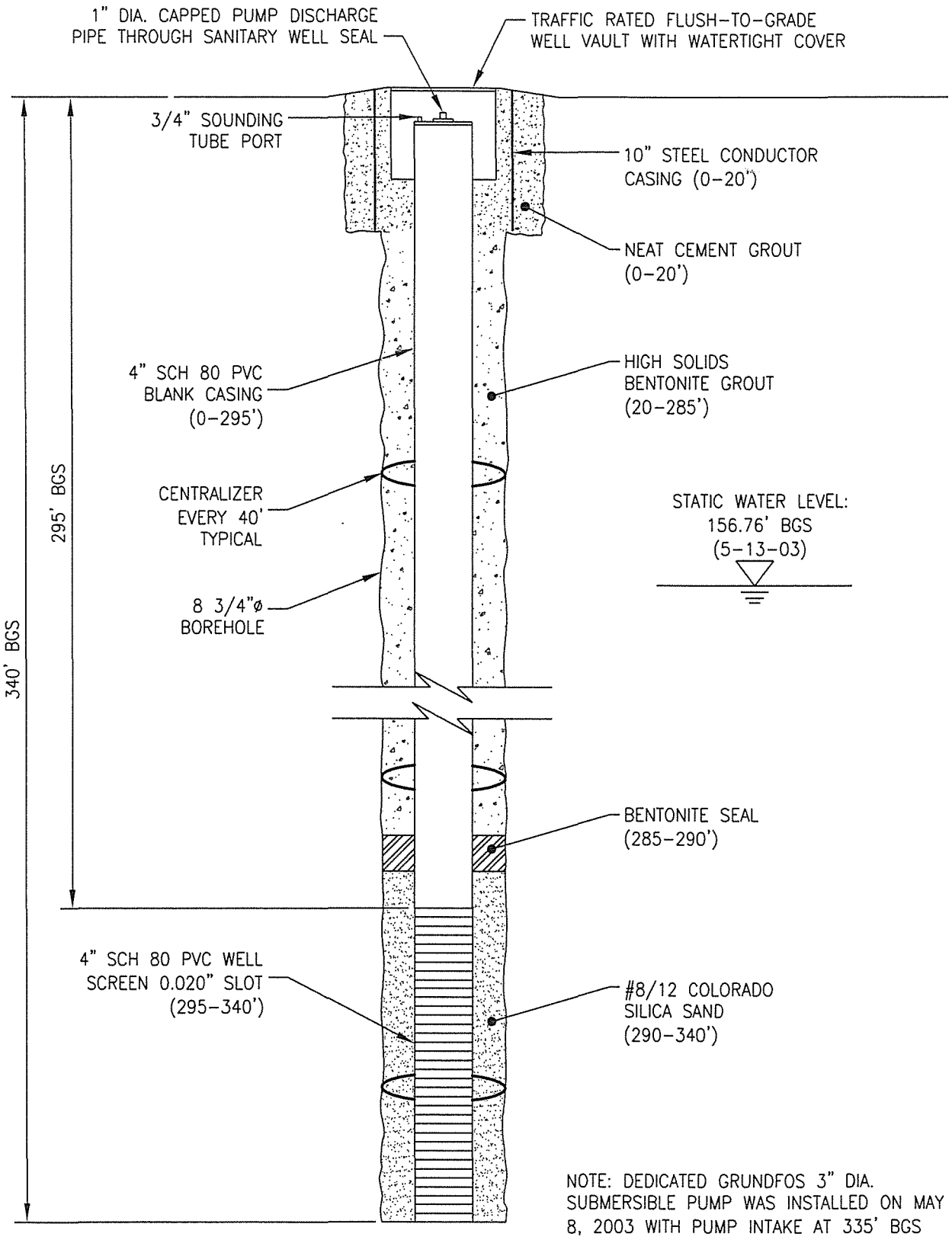

NOTE: DEDICATED GRUNDFOS 3" DIA. SUBMERSIBLE PUMP WAS INSTALLED ON MAY 8, 2003 WITH PUMP INTAKE AT 335' BGS

TITLE:	**LSGS MOINTOR WELL MW-110M CONSTRUCTION SCHEMATIC**
PROJECT:	**WEST OSBORN COMPLEX WQARF AREA 47th DRIVE AND LEXINGTON AVENUE**

GeoTrans, Inc. A TETRA TECH COMPANY

CHECKED	JWR	FIGURE
DRAFTED	DBS	1
PROJECT	2209.002.03	
DATE	6/25/03	

GeoTrans, Inc.

GeoTrans, Inc
565 South Ash Ave, Suite G-1
Tempe, Arizona 85282

Log of Borehole: MW-110M

Project No.: 2209.002.03

Project: U.I.C.; RI/FS of WOC

Client: U.I.C.

Lat/Lon: 33.4855 / 112.1613

Location: 47th Place and Lexington

Project Manager: J.Rackow

SUBSURFACE PROFILE				DRILLING INFO.				
Depth (ft / m)	Symbol	Description	Elev./Depth	Rate (ft/min)	Gravel %	Fines %	Sand %	Well Completion Details
0 / 0		Ground Surface	1100.0					
		SANDY GRAVEL Gravel and Sand	0.0 – 1080.0					
20		***GRAVELLY SAND*** Sand, medium to coarse, Gravel (0.5-3 cm), some silt/clay	20.0 – 1070.0		40	10	50	
30		***SANDY GRAVELLY CLAY*** Clay, Gravel (0.5-3 cm), some Sand	30.0 – 1060.0		30	50	20	
40		***GRAVELLY SAND*** Sand, fine to med; Gravel (0.5-2 cm); some Silt	40.0 – 1050.0		20	10	70	
50			50.0					

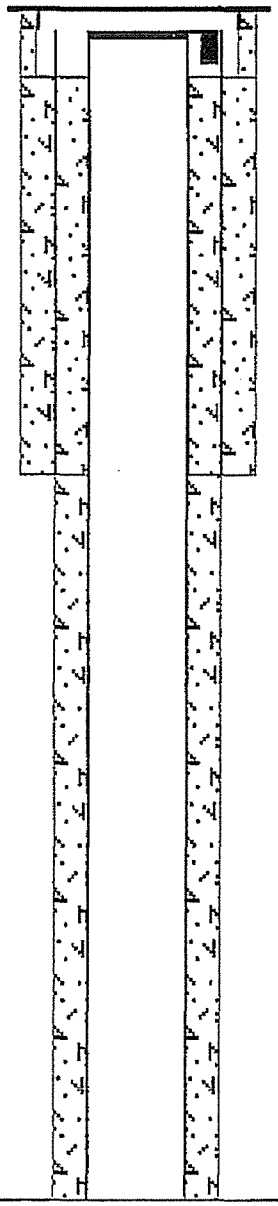

Drilled By: Stewart Bros.

Hole Size: 7 7/8 in.

Drill Method: Mud Rotary

Datum: Ground Surface

Drill Date: April 23 to 28, 2003

Sheet: 1 of 8

GeoTrans, Inc.

GeoTrans, Inc
4365 South Ash Ave, Suite G-1
Tempe, Arizona 85282

Log of Borehole: MW-110M

Project No.: 2209.002.03

Project: U.I.C.; RI/FS of WOC

Client: U.I.C.

Lat/Lon: 33.4855 / 112.1613

Location: 47th Place and Lexington

Project Manager: J.Rackow

SUBSURFACE PROFILE				DRILLING INFO.				
Depth	Symbol	Description	Elev./Depth	Rate (ft/min)	Gravel %	Fines %	Sand %	Well Completion Details
		GRAVELLY SAND Sand, fine to coarse; Gravel, angular in cuttings, trace silt/clay	1040.0		25	5	70	
		SANDY GRAVEL Gravel, angular in cuttings; Sand, fine to coarse	60.0 / 1030.0		50	0	50	
		GRAVELLY SAND Gravel (0.5-2 cm), Sand, fine to coarse	70.0 / 1020.0		30	0	70	
		SILTY GRAVELLY SAND Gravel (0.5-2 cm); Sand, silt/clay	80.0 / 1010.0		35	15	50	
		SANDY CLAYEY GRAVEL Gravel (0.5-2 cm); Clay; Sand	90.0 / 1000.0		50	30	20	
55, 60, 65, 70, 75, 80, 85, 90, 95, 100	20, 25, 30		100.0					

Drilled By: Stewart Bros.

Hole Size: 7 7/8 in.

Drill Method: Mud Rotary

Datum: Ground Surface

Drill Date: April 23 to 28, 2003

Sheet: 2 of 8

GeoTrans, Inc.

GeoTrans, Inc
.365 South Ash Ave, Suite G-1
Tempe, Arizona 85282

Log of Borehole: MW-110M

Project No.: 2209.002.03

Project: U.I.C.; RI/FS of WOC

Client: U.I.C.

Lat/Lon: 33.4855 / 112.1613

Location: 47th Place and Lexington

Project Manager: J.Rackow

SUBSURFACE PROFILE				DRILLING INFO.				
Depth	Symbol	Description	Elev./Depth	Rate (ft/min)	Gravel %	Fines %	Sand %	Well Completion Details
		SAND Sand, med to coarse; trace Silt	990.0		0	5	95	
		SAND Sand, fine to med;trace Silt	980.0		0	5	95	
		SILTY SAND Sand, fine to med;Silt	970.0		0	15	85	
		SAND Sand, fine to med	960.0		0	0	100	
		SILTY SAND Sand, fine to med; Silt and Clay	950.0		0	20	80	

Depth scale: 05, 10, 15, 20, 25, 30, 35, 40, 45, 50

illed By: Stewart Bros.

Hole Size: 7 7/8 in.

Drill Method: Mud Rotary

Datum: Ground Surface

Drill Date: April 23 to 28, 2003

Sheet: 3 of 8

GeoTrans, Inc.

GeoTrans, Inc
..565 South Ash Ave, Suite G-1
Tempe, Arizona 85282

Log of Borehole: MW-110M

Project No.: 2209.002.03

Project: U.I.C.; RI/FS of WOC

Client: U.I.C.

Lat/Lon: 33.4855 / 112.1613

Location: 47th Place and Lexington

Project Manager: J.Rackow

SUBSURFACE PROFILE				DRILLING INFO.				Well Completion Details
Depth	Symbol	Description	Elev./Depth	Rate (ft/min)	Gravel %	Fines %	Sand %	
155		***CLAYEY SAND*** Sand, fine to coarse; Clay	940.0		0	40	60	
160		***SAND*** Sand, med to coarse	160.0 930.0		0	0	100	
50 165								
170		***CLAYEY SAND*** Sand, fine to med; Clay	170.0 920.0		0	40	60	
175								
180		***CLAYEY SAND*** Sand, fine to med; Clay	180.0 910.0		0	15	85	
55 185								
190		***SAND*** Sand, fine to med; trace Clay	190.0 900.0		0	5	95	
195								
60 200			200.0					

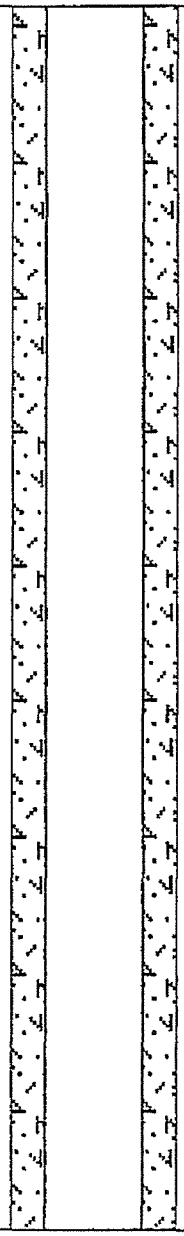

Drilled By: Stewart Bros.

Hole Size: 7 7/8 in.

Drill Method: Mud Rotary

Datum: Ground Surface

Drill Date: April 23 to 28, 2003

Sheet: 4 of 8

GeoTrans, Inc.

GeoTrans, Inc
865 South Ash Ave, Suite G-1
Tempe, Arizona 85282

Log of Borehole: MW-110M

Project No.: 2209.002.03

Project: U.I.C.; RI/FS of WOC

Client: U.I.C.

Lat/Lon: 33.4855 / 112.1613

Location: 47th Place and Lexington

Project Manager: J.Rackow

SUBSURFACE PROFILE				DRILLING INFO.				
Depth	Symbol	Description	Elev./Depth	Rate (ft/min)	Gravel %	Fines %	Sand %	Well Completion Details
205		***SANDY SILT*** Silt; Sand, fine	890.0		0	80	20	
210		***SILTY CLAY*** Clay and Silt, some fine sand	210.0 / 880.0		0	90	10	
65, 215								
220		***SANDY SILT*** Silt with fine sand; some clay	220.0 / 870.0		0	70	30	
225								
70, 230		***SANDY SILT*** Silt; Sand, fine to med	230.0 / 860.0		0	70	30	
235								
240		***CLAYEY SAND*** Sand, fine; Clay	240.0 / 850.0		0	30	70	
245								
75, 250			250.0					

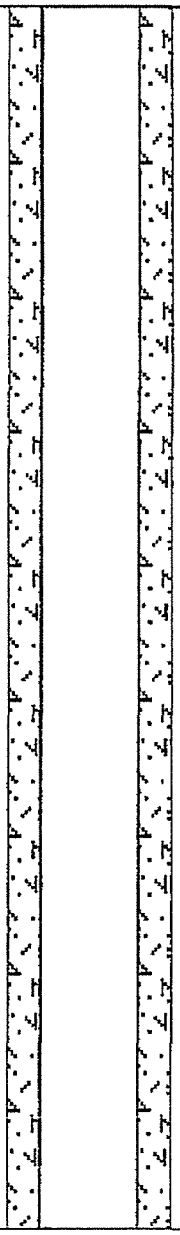

Drilled By: Stewart Bros.

Hole Size: 7 7/8 in.

Drill Method: Mud Rotary

Datum: Ground Surface

Drill Date: April 23 to 28, 2003

Sheet: 5 of 8

GeoTrans, Inc.

GeoTrans, Inc
4665 South Ash Ave, Suite G-1
Tempe, Arizona 85282

Log of Borehole: MW-110M

Project No.: 2209.002.03

Project: U.I.C.; RI/FS of WOC

Client: U.I.C.

Lat/Lon: 33.4855 / 112.1613

Location: 47th Place and Lexington

Project Manager: J.Rackow

SUBSURFACE PROFILE				DRILLING INFO.				
Depth	Symbol	Description	Elev./Depth	Rate (ft/min)	Gravel %	Fines %	Sand %	Well Completion Details
		SILTY SAND Sand, fine; Silt	840.0		0	20	80	
		SILTY SAND Sand, fine; Silt	830.0		0	20	80	
		SAND Sand, fine to med; trace silt	820.0		0	5	95	
		SAND Sand, med; trace silt/clay	810.0		0	5	95	
		SAND Sand, fine to med; some Silt	800.0		0	10	90	

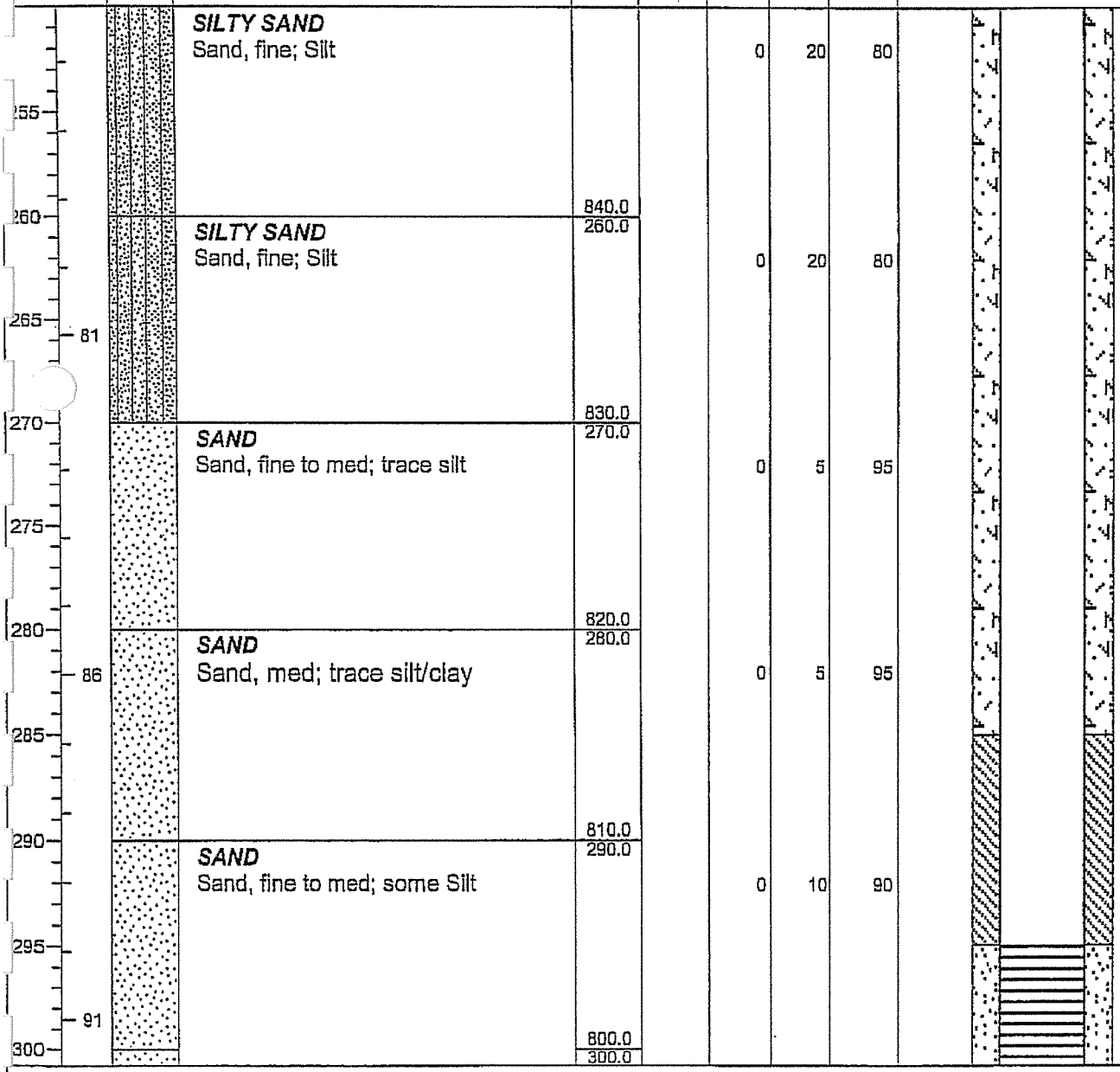

Drilled By: Stewart Bros.

Hole Size: 7 7/8 in.

Drill Method: Mud Rotary

Datum: Ground Surface

Drill Date: April 23 to 28, 2003

Sheet: 6 of 8

GeoTrans, Inc.

GeoTrans, Inc
4665 South Ash Ave, Suite G-1
Tempe, Arizona 85282

Log of Borehole: MW-110M

Project No.: 2209.002.03

Project: U.I.C.; RI/FS of WOC

Client: U.I.C.

Lat/Lon: 33.4855 / 112.1613

Location: 47th Place and Lexington

Project Manager: J.Rackow

SUBSURFACE PROFILE				DRILLING INFO.				
Depth	Symbol	Description	Elev./Depth	Rate (ft/min)	Gravel %	Fines %	Sand %	Well Completion Details
		SAND Sand, fine; some Silt	790.0		0	10	90	
310		***SILTY SAND*** Sand, fine to med; Silt	310.0 / 780.0		0	15	85	
315 — 96								
320		***SILTY SAND*** Sand, fine; Silt; some Gravel	320.0 / 770.0		10	20	70	
325								
330 — 101		***SAND*** Sand, clean, fine to coarse	330.0 / 760.0		0	0	100	
335								
340		***CLAY*** Clay; some Sand, fine to med	340.0 / 750.0		0	90	10	
345 — 106								
350			350.0					

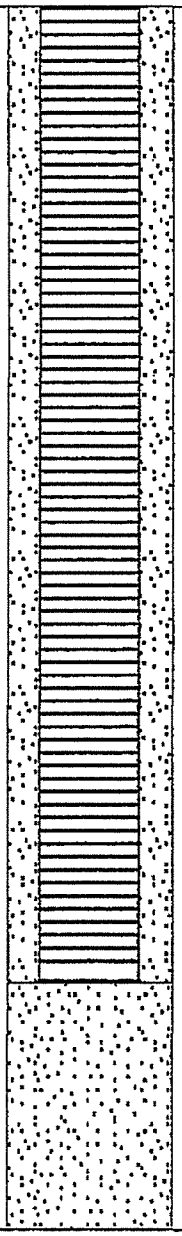

Drilled By: Stewart Bros.

Hole Size: 7 7/8 in.

Drill Method: Mud Rotary

Datum: Ground Surface

Drill Date: April 23 to 28, 2003

Sheet: 7 of 8

GeoTrans, Inc.

GeoTrans, Inc
65 South Ash Ave, Suite G-1
Tempe, Arizona 85282

Log of Borehole: MW-110M

Project No.: 2209.002.03

Project: U.I.C.; RI/FS of WOC

Client: U.I.C.

Lat/Lon: 33.4855 / 112.1613

Location: 47th Place and Lexington

Project Manager: J.Rackow

SUBSURFACE PROFILE				DRILLING INFO.				
Depth	Symbol	Description	Elev./Depth	Rate (ft/min)	Gravel %	Fines %	Sand %	Well Completion Details
55		***SILT*** Silt; some Sand, fine	740.0		0	90	10	
60		***CLAY*** Clay; some Sand, fine	360.0		0	90	10	
111 / 365			730.0					
370		***CLAY*** Clay	370.0		0	100	0	
375								
380			720.0					
116			380.0					
385								
390								
395								
121								
400								

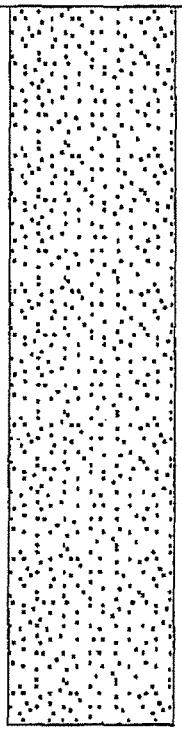

Drilled By: Stewart Bros.

Hole Size: 7 7/8 in.

Drill Method: Mud Rotary

Datum: Ground Surface

Drill Date: April 23 to 28, 2003

Sheet: 8 of 8

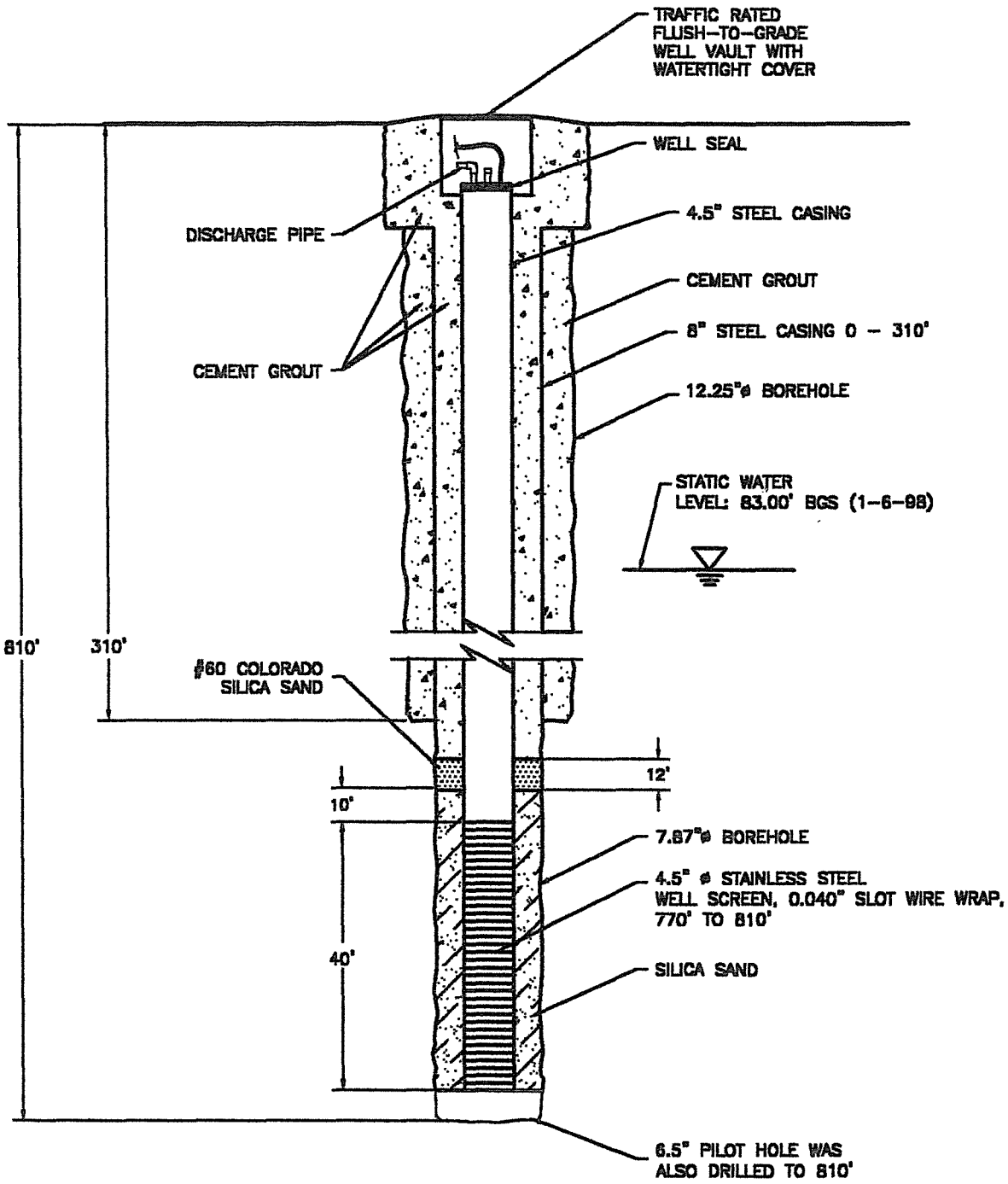

NOT TO SCALE

UNITED INDUSTRIAL CORPORATION	DATE: 7-27-98
DEEP WELL MW-4L SECTION VIEW	DESIGNED:
	CHECKED:
	APPROVED:
	DRAWN: JDD
	PROJ.: N386-113
HSI GEOTRANS A Tetra Tech Company	

.../VB-REPORT/WELL-004L.DWG

MW-4L

SOIL BOREHOLE LOG

SITE NAME AND LOCATION 808708313/105 UIC Phoenix, AZ	DRILLING METHOD: mud rotary 6.5" open faced tricone	BORING NO. MW-4L	
	SAMPLING METHOD: grab every 25' or drive at lithology changes	SHEET 1 OF 11	
		DRILLING	
		START	FINISH
	WATER LEVEL / TIME / DATE / CASING DEPTH	TIME 0700	TIME 1000
		DATE 9/18/96	DATE 9/20/96
DATUM: APPROXIMATE ELEVATION:			

DRILLING RIG: Gardner Denver 1500

SURFACE CONDITIONS: note: all samples logged wet

ANGLE: vertical HAMMER WEIGHT:

SAMPLE HAMMER TORQUE: FT.-LBS

DRILLING CONTRACTOR Stewart Brothers Drilling Company

DEPTH IN FEET	Soil Graph	Inches Driven / Inches Recovered	Sample No / Sample Depth	BLOWS	TIME	SAMPLE NUMBER AND DESCRIPTION OF MATERIAL
0						0-25': SILTY SAND (SM): trace gravel, brown; 80-90% fine to coarse-grained sand, 15-10% silt, approx. < 5% gravel, coarse
5						sand and subangular gravel
10	SM					
15						
20						
25						25'-50': CLAYEY GRAVEL (GC): some sand, brown, approx. 50% coarse sand and gravel
30						
35	GC					
40						
45						45': start of sand
50						50'-75': SAND some CLAY and SILT (SM-SW): brown, gray, medium to coarse-grained sand, some fine sand from shaker sampler
55	SM SW					
65						
70						

LOGGED BY David Broermann

DATE 9/18/96

CHECKED BY

SOIL BOREHOLE LOG

SITE NAME AND LOCATION	DRILLING METHOD:	BORING NO.
808708313/105 UIC Phoenix, AZ	mud rotary 6.5" open faced tricone	MW-4L
		SHEET 2 OF 11
	SAMPLING METHOD: grab every 25' or drive at lithology changes	DRILLING START / FINISH
	WATER LEVEL / TIME / DATE / CASING DEPTH	TIME 0700 / TIME 1000
		DATE 9/18/96 / DATE 9/20/96
DATUM: APPROXIMATE ELEVATION:		

DRILLING RIG: Gardner Denver 1500

SURFACE CONDITIONS: note: all samples logged wet

ANGLE: vertical HAMMER WEIGHT:

SAMPLE HAMMER TORQUE: FT.-LBS

DRILLING CONTRACTOR Stewart Brothers Drilling Company

DEPTH IN FEET	Soil Graph	Inches Driven / Inches Recovered	Sample No / Sample Depth	BLOWS	TIME	SAMPLE NUMBER AND DESCRIPTION OF MATERIAL
75	SM SW					75'-100': SILTY CLAYEY SAND (SC) with SANDY GRAVEL: zones/lenses trace caliche. 80% sand and fine gravel (approx. 20% of
80						sand is fine-grained). 20% fines (silt and clay) mixed
85	SC					
90						
95						
100						100'-125': SILTY CLAYEY SAND and GRAVEL (GC): interbedded sand and gravel (rig loud and quiet approx. 5-10' thick gravel),
105						brown. 40-50% coarse-grained sand and gravel, 20% fine to medium-grained sand, 30-40% clay
110						
115	GC					
120						
125						125'-150': SILTY CLAYEY SAND and GRAVEL (GC): interbedded sand and gravel (rig loud and quiet approx. 5-10' thick gravel),
130						brown, 40-50% coarse-grained sand and gravel, 20% fine to medium-grained sand, 40-50% clay
135						
140						
145						

LOGGED BY David Broermann

DATE 9/18/96

CHECKED BY

SOIL BOREHOLE LOG

SITE NAME AND LOCATION	DRILLING METHOD:	BORING NO.
808708313/105 UIC Phoenix, AZ	mud rotary 6.5" open faced tricone	MW-4L
		SHEET 3 OF 11
	SAMPLING METHOD: grab every 25' or drive at lithology changes	DRILLING START / FINISH
	WATER LEVEL / TIME / DATE / CASING DEPTH	START TIME 0700, DATE 9/18/96; FINISH TIME 1000, DATE 9/20/96
DATUM: APPROXIMATE ELEVATION:		

DRILLING CONTRACTOR Stewart Brothers Drilling Company

DRILLING RIG: Gardner Denver 1500

SURFACE CONDITIONS: note: all samples logged wet

ANGLE: vertical HAMMER WEIGHT:

SAMPLE HAMMER TORQUE: FT.-LBS

DEPTH IN FEET	Soil Graph	Inches Driven / Inches Recovered	Sample No / Sample Depth	BLOWS	TIME	SAMPLE NUMBER AND DESCRIPTION OF MATERIAL
150	GC					150'-175': SANDY GRAVELLY CLAY, SAND (SC): brown, coarse-grained sand and gravel and clay
	SC					
155	CL					155'-160': CLAY (CL) 155'-160': rig noise reduced due to formation
160						[Drive Sample:160': CLAYEY SAND (SC): brown, fine to medium-grained sand]
165						
	SC					
170						
175						175'-200': SANDY CLAY to CLAY (CL): some sand in shaker sample, but mostly clay, 80-90% clay
180						
185						
190	CL					continued easy drilling clay and sand
195						
200						200'-225': GRAVELLY SANDY CLAY (CL): brown, fine to coarse-grained sand and gravel (subangular); 5-10% gravel, 20-30%
205						sand, 60-75% clay
215						
220						

LOGGED BY David Broermann

CHECKED BY

DATE 9/18/96

SOIL BOREHOLE LOG

SITE NAME AND LOCATION	DRILLING METHOD:	BORING NO.
808708313/105 UIC Phoenix, AZ	mud rotary 6.5" open faced tricone	MW-4L
		SHEET 4 OF 11
	SAMPLING METHOD: grab every 25' or drive at lithology changes	DRILLING START / FINISH
	WATER LEVEL / TIME / DATE / CASING DEPTH	TIME 0700 / DATE 9/18/96 — TIME 1000 / DATE 9/20/96
DATUM: APPROXIMATE ELEVATION:		

DRILLING RIG: Gardner Denver 1500

SURFACE CONDITIONS: note: all samples logged wet

ANGLE: vertical HAMMER WEIGHT:

SAMPLE HAMMER TORQUE: FT.-LBS

DEPTH IN FEET	Soil Graph	Inches Driven / Inches Recovered	Sample No / Sample Depth	BLOWS	TIME	SAMPLE NUMBER AND DESCRIPTION OF MATERIAL
225	SC CL					225'-250': GRAVELLY SANDY CLAY (CL): brown, fine to coarse-grained sand and gravel, sizes range from
230						1/4" to 1/2", rounded and subangular; 10-20% gravel, 20-30% sand, 60-75% clay
235						
240						
245	CL					
250						250'-275': GRAVELLY CLAY, SANDY GRAVELLY CLAY (CL): brown, fine to coarse-grained sand and gravel, sizes range from 1/4"
255						to 1/2", rounded and subangular; 10-20% gravel, 20-30% sand, 60-75% clay
260						
265						
270						
275						275'-280': SANDY GRAVELLY CLAY (CL): brown, fine to coarse-grained sand and gravel, sizes range
280	CL					from 1/4" to 1/2", rounded and subangular; 10-20% gravel, 20-30% sand, 60-75% clay
285	GM					[Drive Sample Attempt: 285': GRAVELLY SAND, SANDY GRAVEL (GM): sample refusal, 1/2"-3/4" gravel
290						280'-300': SANDY GRAVEL (GM): fine to coarse-grained sand, 1/4"-1/2" rounded and angular gravel, trace clay
295						

DRILLING CONTRACTOR Stewart Brothers Drilling Company

LOGGED BY David Broermann

CHECKED BY

DATE 9/18/96

SOIL BOREHOLE LOG

SITE NAME AND LOCATION	DRILLING METHOD:	BORING NO.
808708313/105 UIC Phoenix, AZ	mud rotary 6.5" open faced tricone	MW-4L
		SHEET 5 OF 11
	SAMPLING METHOD: grab every 25' or drive at lithology changes	DRILLING START / FINISH
	WATER LEVEL / TIME / DATE / CASING DEPTH	TIME 0700 / TIME 1000
		DATE 9/18/96 / DATE 9/20/96
DATUM: APPROXIMATE ELEVATION:		

DRILLING RIG: Gardner Denver 1500

SURFACE CONDITIONS: note: all samples logged wet

ANGLE: vertical HAMMER WEIGHT:

SAMPLE HAMMER TORQUE: FT.-LBS

DRILLING CONTRACTOR Stewart Brothers Drilling Company

DEPTH IN FEET	Soil Graph	Inches Driven / Inches Recovered	Sample No / Sample Depth	BLOWS	TIME	SAMPLE NUMBER AND DESCRIPTION OF MATERIAL
300	GM					300'-325': CLAYEY SAND with trace gravel, SANDY CLAY trace (SC-CL): brown; 40-50% clay, 50-40% very fine-grained sand
305						
310	SC CL					
315						
320						
325						325'-350': CLAYEY SAND (SC): brown, 40% clay, 60% very fine-grained sand
330						
335	SC					some interbedded gravel with sand, gravel lenses less than 3-5' thick
340						
345						
350						350'-375': SILTY SAND (SM-SC): with clay and gravel, gravel sizes range from 1/4" to 1/3", brown, fine to coarse-grained sand,
355						predominately fine, some coarse sand and fine/small gravel, gravel rounded and subangular
360	SM SC					
365						
370						

LOGGED BY David Broermann

DATE 9/18/96

CHECKED BY

SOIL BOREHOLE LOG

SITE NAME AND LOCATION	DRILLING METHOD:	BORING NO.
808708313/105 UIC Phoenix, AZ	mud rotary 6.5" open faced tricone	MW-4L
		SHEET 6 OF 11
	SAMPLING METHOD: grab every 25' or drive at lithology changes	DRILLING START / FINISH

						START	FINISH
WATER LEVEL						TIME	TIME
TIME						0700	1000
DATE						DATE	DATE
CASING DEPTH						9/18/96	9/20/96

DATUM: APPROXIMATE ELEVATION:

DRILLING RIG: Gardner Denver 1500

SURFACE CONDITIONS: note: all samples logged wet

ANGLE: vertical HAMMER WEIGHT:

SAMPLE HAMMER TORQUE: FT.-LBS

DEPTH IN FEET	Soil Graph	Inches Driven / Inches Recovered	Sample No / Sample Depth	BLOWS	TIME	SAMPLE NUMBER AND DESCRIPTION OF MATERIAL
375	SM SC					375'-400': SANDY CLAY, CLAYEY SAND (CL-SC): increased clay percentage from 375' to 390'
380						
385	CL SC					
390						increased sand
395						
400						400'-425': CLAYEY SILTY SAND (SC): brown, very fine-grained sand
405						
410						
415	SC					
420						
425						425'-450': CLAYEY SILTY SAND (SC): brown, very fine-grained sand; 10-15% clay, 10-15% silt, 60-80% sand
430						
435						
440						
445						

DRILLING CONTRACTOR Stewart Brothers Drilling Company

LOGGED BY David Broermann

CHECKED BY

DATE 9/18/96

SOIL BOREHOLE LOG

SITE NAME AND LOCATION	DRILLING METHOD	BORING NO.
808708313/105 UIC Phoenix, AZ	mud rotary 6.5" open faced tricone	MW-4L
		SHEET 7 OF 11
	SAMPLING METHOD: grab every 25' or drive at lithology changes	DRILLING START / FINISH
	WATER LEVEL / TIME / DATE / CASING DEPTH	TIME 0700 / TIME 1000
		DATE 9/18/96 / DATE 9/20/96
DATUM: APPROXIMATE ELEVATION:		

DRILLING RIG: Gardner Denver 1500

SURFACE CONDITIONS: note: all samples logged wet

ANGLE: vertical HAMMER WEIGHT:

SAMPLE HAMMER TORQUE: FT.-LBS

DEPTH IN FEET	Soil Graph	Inches Driven / Inches Recovered	Sample No / Sample Depth	BLOWS	TIME	SAMPLE NUMBER AND DESCRIPTION OF MATERIAL
450	SC					450'-475': SILTY CLAYEY SAND (SC): trace gravel, brown; 20% silt, 20% clay, 60% sand (80% very fine-grained, 15% medium-grained, 5% coarse-grained)
455						
460	SC					
465						
470						
475						475'-500': CLAYEY SAND, SANDY CLAY trace-some gravel (SC-CL): brown, very fine-grained sand, some coarse sand and gravel, gravel is angular and subrounded
480	SC CL					
485						
490						
495						
500						500'-525': SILTY SAND, CLAYEY SAND (SM-SC): brown, very fine-grained sand, with clay and silt
505						
510	SM SC					
515						
520						

DRILLING CONTRACTOR Stewart Brothers Drilling Company

LOGGED BY David Broermann

CHECKED BY

DATE 9/18/96

SOIL BOREHOLE LOG

SITE NAME AND LOCATION	DRILLING METHOD:	BORING NO.
808708313/105 UIC Phoenix, AZ	mud rotary 6.5" open faced tricone	MW-4L
		SHEET 8 OF 11
	SAMPLING METHOD: grab every 25' or drive at lithology changes	DRILLING START / FINISH
	WATER LEVEL / TIME / DATE / CASING DEPTH	TIME 0700 / TIME 1000 / DATE 9/18/96 / DATE 9/20/96
DATUM: APPROXIMATE ELEVATION:		

DRILLING RIG: Gardner Denver 1500

SURFACE CONDITIONS: note: all samples logged wet

ANGLE: vertical HAMMER WEIGHT:

SAMPLE HAMMER TORQUE: FT.-LBS

DRILLING CONTRACTOR Stewart Brothers Drilling Company

DEPTH IN FEET	Soil Graph	Inches Driven / Inches Recovered	Sample No / Sample Depth	BLOWS	TIME	SAMPLE NUMBER AND DESCRIPTION OF MATERIAL
525	SM SC					525'-550': SILTY CLAYEY SAND , trace gravel (SC): brown, very fine-grained sand, gravel from 1/2" to 1/4", rounded and angular
530						
535						
540	SC					
545						
550						550'-575': CLAYEY SAND, SANDY CLAY (SC-CL): brown, very fine-grained sand and clay
555	SC CL					
560						
565						
570						
575						575'-600': SANDY CLAY (CL): brown, 50/50 mix of very fine-grained sand and clay, clay percentage increases with depth
580	CL					
585						
590						
595						

LOGGED BY David Broermann

CHECKED BY

DATE 9/18/96

SOIL BOREHOLE LOG

SITE NAME AND LOCATION 808708313/105 UIC Phoenix, AZ	DRILLING METHOD: mud rotary 6.5" open faced tricone	BORING NO. MW-4L	
	SAMPLING METHOD: grab every 25' or drive at lithology changes	SHEET 9 OF 11	
		DRILLING	
		START	FINISH
	WATER LEVEL	TIME	TIME
	TIME	0700	1000
	DATE	DATE	DATE
DATUM: APPROXIMATE ELEVATION:	CASING DEPTH	9/18/96	9/20/96

DRILLING RIG: Gardner Denver 1500

SURFACE CONDITIONS: note: all samples logged wet

ANGLE: vertical HAMMER WEIGHT:

SAMPLE HAMMER TORQUE: FT.-LBS

DEPTH IN FEET	Soil Graph	Inches Driven / Inches Recovered	Sample No / Sample Depth	BLOWS	TIME	SAMPLE NUMBER AND DESCRIPTION OF MATERIAL
600	CL					600'-625': SANDY SILTY CLAY (ML-CL): brown, very fine-grained sand and silt
605						
610	ML CL					
615						
620						
625						625'-650': SANDY CLAY (CL): brown, very fine-grained sand with silt and clay
630						
635						
640						
645	CL					
650						650'-675': SANDY SILTY CLAY (CL): brown, very fine-grained sand (20%) with silty clay
655						
660						
665						
670						

DRILLING CONTRACTOR Stewart Brothers Drilling Company

LOGGED BY David Broermann

CHECKED BY

DATE 9/18/96

SOIL BOREHOLE LOG

SITE NAME AND LOCATION	DRILLING METHOD:	BORING NO.
808708313/105 UIC Phoenix, AZ	mud rotary 6.5" open faced tricone	MW-4L
		SHEET 10 OF 11
	SAMPLING METHOD: grab every 25' or drive at lithology changes	DRILLING

					START	FINISH
WATER LEVEL					TIME	TIME
TIME					0700	1000
DATE					DATE	DATE
CASING DEPTH					9/18/96	9/20/96

DATUM: APPROXIMATE ELEVATION:

DRILLING RIG: Gardner Denver 1500

SURFACE CONDITIONS: note: all samples logged wet

ANGLE: vertical HAMMER WEIGHT:

SAMPLE HAMMER TORQUE: FT.-LBS

DRILLING CONTRACTOR Stewart Brothers Drilling Company

DEPTH IN FEET	Soil Graph	Inches Driven / Inches Recovered	Sample No / Sample Depth	BLOWS	TIME	SAMPLE NUMBER AND DESCRIPTION OF MATERIAL
675						675'-700': SILTY CLAY (CL): some sand, brown, trace to some sand interbedded from 675'-700'
680						
685						
690						
695						
700	CL					700'-725': SANDY CLAY (CL): brown, very fine-grained (some medium) sand; 40% sand, 60% clay
705						
710						
715						
720						725'-750': SANDY CLAY (CL): brown, very fine-grained (some medium) sand; 40% sand, 60% clay
725						
730						
735						
740						
745						

LOGGED BY David Broermann

CHECKED BY

DATE 9/18/96

SOIL BOREHOLE LOG

SITE NAME AND LOCATION 808708313/105 UIC Phoenix, AZ	DRILLING METHOD: mud rotary 6.5" open faced tricone	BORING NO. MW-4L	
	SAMPLING METHOD: grab every 25' or drive at lithology changes	SHEET 11 OF 11	
		DRILLING	
		START	FINISH
	WATER LEVEL / TIME / DATE / CASING DEPTH	TIME 0700	TIME 1000
DATUM: APPROXIMATE ELEVATION:		DATE 9/18/96	DATE 9/20/96

DRILLING RIG: Gardner Denver 1500

SURFACE CONDITIONS: note: all samples logged wet

ANGLE: vertical HAMMER WEIGHT:

SAMPLE HAMMER TORQUE: FT.-LBS

DEPTH IN FEET	Soil Graph	Inches Driven / Inches Recovered	Sample No / Sample Depth	BLOWS	TIME	SAMPLE NUMBER AND DESCRIPTION OF MATERIAL
750	CL					
755						750'-775': SILTY SAND (SM): brown, 80-90% very fine to fine-grained sand, silt, trace clay
760						
765						
770	SM					
775						775'-800': SILTY SAND (SM): some gravel and clay, brown, trace to some gravel, sizes range from 1/4"-1"
780						
785						
790						
795						
800						800'-820': CLAYEY SANDY GRAVEL (SM-GM): increased percent of gravel
805	SM GM					
810						
815						
820						TD=820'

DRILLING CONTRACTOR Stewart Brothers Drilling Company

LOGGED BY David Broermann

CHECKED BY

DATE 9/18/96

ELECTRIC LOGS FOR MW-4L

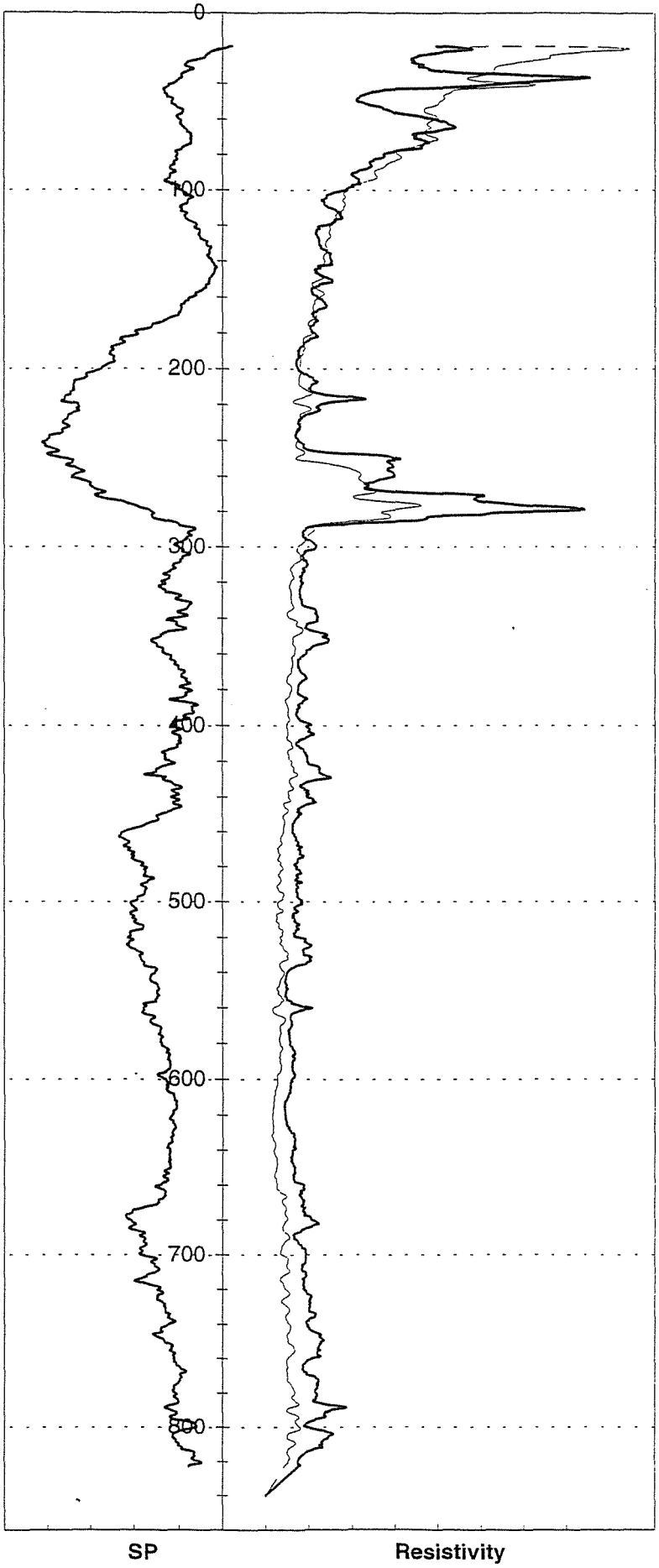

HSI GEOTRANS

NATURAL GAMMA AND NEUTRON LOG FOR MW-4L

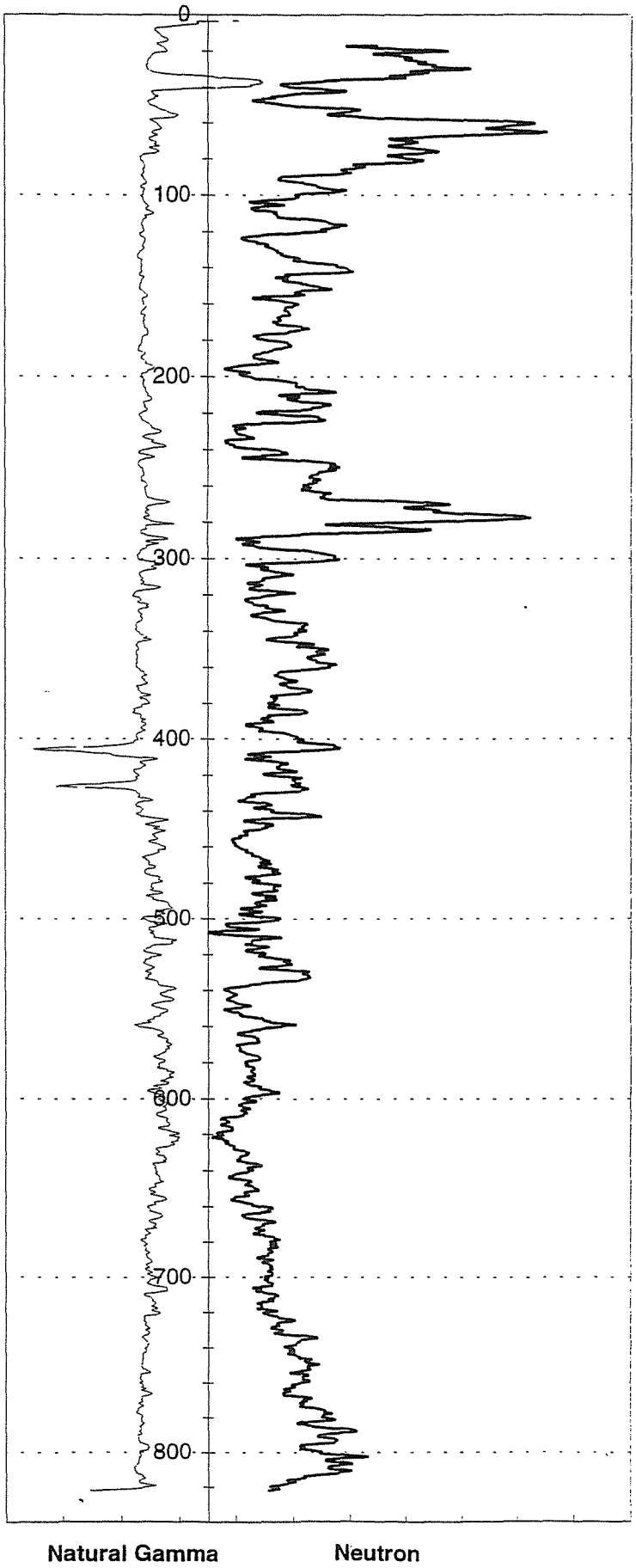

HSI GEOTRANS

MONITOR WELL CONSTRUCTION SUMMARY

Well No. MW-4L

Boring No. X-Ref:

Map Coords: 4956 N, 5062 E

Elevation Ground Level:

Job Number: 808708313

Top of Casing: 1108.14

Drilling Summary:		Construction Time Log: **Start** 9/17/96 **Finish** 9/27/96				
Total Depth	810 feet		Date	Time	Date	Time
Borehole Diameter	7 ⅞ inches	Drilling (6 1/2")	9/17/96	1700	9/20/96	1000
Casing Stick-Up	0	(12 1/4")	9/23/96	0730	9/23/96	1600
Driller	Stewart Brothers Drilling Co.	(7 ⅞")	9/25/96	1300	9/26/96	1200
1700Rig	Gardner Denver 1500					
Bit(s)	0-810 feet: 6 1/2" tricone 0-310 feet: 12 1/4" tricone 310-810 feet: 7 ⅞" tricone	Geophys. Logging	9/20/96	1130	9/20/96	
Drilling Fluid	Bentonite mud and polymers	Casing: 8 ⅝"	9/24/96	0900	9/24/96	1200
Protective Casing	None	Casing: 8 ⅝"	9/24/96	1230	9/24/96	1400
Comments: 6 ½ inch pilot hole was drilled from 0 to 810 feet. The hole		Casing: 4 ½"	9/24/96	1200	9/24/96	1800
was logged and then reamed to 310 feet, using a 12 1/4-inch bit. Eight-						
inch steel casing was then set to 310 feet and grouted in place. A 7						
7/8 inch bit was then used to drill to a depth of 810 feet.		Sand Pack:	9/27/96	0700	9/27/96	1800
		Cementing:	9/27/96	1200		
		Development:	9/27/96	10330	9/27/96	1130

Well Design & Specifications

Basis: Geologic Log x Geophysical Log x

Casing String(s): C = Casing S = Screen

Well Development: 9/27/96 well surged and bailed. 15 bags of sand

*bailed well during filter placement.

Depth (ft)	String (C1, S1, etc.)	Elevation (ft)
0 to 310	C1- 8" LCS	
0 to 770	C2- 4.5" LCS	
770 to 810	S1 - 4.5" stainless steel	

Casing:	C1	8 5/8" Low carbon steel blank casing 0.188 wall
	C2	4.5" Low carbon steel blank casing 0.188 wall
Screen:	S1	4.5 " Stainless steel, 0.040" slot wire wrap
	S2	
Filter Pack:		810' 760': 8-12 Colorado silica sand.
Grout Seal:		0-748': neat cement with 3.5% bentonite; 0-310': neat
		cement with 3.5% bentonite on outside of 8 5/8" surface casing
Seal:		748'-760' #60 Colorado silica sand

Stabilization Test Data:

Time	pH	Spec. Cond. μs/m	Temp (C)

Pumped

Site Name: West Osborn Complex

Location: 3600 West Osborn Road

Supervised By: David Broermann

Date:

STATE OF ARIZONA
DEPARTMENT OF WATER RESOURCES
GROUNDWATER MANAGEMENT SUPPORT SECTION
MAIL TO: P.O. BOX 458, PHOENIX, ARIZONA 85001-0458
500 NORTH THIRD STREET, PHOENIX, ARIZONA 85004-3903
PHONE (602) 417-2470 FAX (602) 417-2422

RECEIVED
JUN 14 1996
GROUNDWATER MGT

NOTICE OF INTENTION TO DRILL MONITOR/PIEZOMETER WELL

PLEASE READ GENERAL INSTRUCTIONS ON REVERSE SIDE OF THIS FORM BEFORE COMPLETING.

Section §45-596, Arizona Revised Statues provide: Prior to drilling a monitor or piezometer well, a Notice of Intention to Drill shall be filed with the Department.

Well/Land Location:

2N (Township) 2E (Range) 27 (Section)

SW ¼ (10 Acre) SE ¼ (40 Acre) NE ¼ (160 Acre)

Position location of the well on the land:

Latitude 33 o 29 ' 23 "

Longitude 112 o 08 ' 17 "

County: Maricopa

Owner of the land of wellsite:

Mr. Charles D. Delaney
Name

3600 West Osborn
Address

Phoenix Az. 85019
City State Zip

Telephone Number (602) 272-4855

Lessee of the land of well site:

Capitial Liquidators
Name

3600 West Osborn
Address

Phoenix Az. 85019
City Sate Zip

Telephone Number (602) 2724855

6. Owner of well:

United Industrial Corporation
Name

4636 East University Drive
Address

Phoenix Az 85034
City State Zip

Phone Number (602) 894-2800

7. Consulting firm:

Hydro-Search, Inc.
Name

David Broermann
Contact Person

(602) 894-2800
Phone Number

8. Purpose of well drilled pursuant to this notice:

Monitor XXXXXX
Piezometer

9. If for deepening or modifying, list well registration number:

55-

FOR DEPARTMENT USE ONLY
File No. A(2-2)27ADC
Filed 6-14-96 By
Input By
ENTERED JUL - 1 1996
DUPLICATE
Mailed 6-27-96 By
Registration 55-558430
AMA/INA
W/S 07 S/B 07

10. Wil this proposed well be associated with a permit: Yes ____ No XX
If yes, Permit No. ____

11. Construction will start:

July 15 1996
Month Day Year

12. Period well will remain in use:

10 Month/Years

13. For monitoring wells, is pump equipment to be installed?

Yes XXXX No ____

(a) If yes, design pump capacity:

10 -15 GPM

(b) What use will be made of the water:

Sampled and disposed

14. Drilling Firm:

Stewart Brothers Drilling Co.
Name

P.O. Box 2067
Address

Milan NM 87021
City State Zip

1-505-287-2986
Telephone Number

314
DWR License Number

A-4
ROC License Category

Proposed method of abandonment of well after project is completed: In accordance with A.A.C. R12-15-811, pursuant to R12-15-816

Is this well to monitor existing contamination? ____ Potential contamination XX Please explain: Monitor wells are to be to monitor potential- existing contamintation previously identified in other monitor wells. Chlorinated Hydrocarbons

ate that this Notice is filed in compliance with Rule A.A.C. R12-15-809 and R12-15-816(F), and is complete and correct to the best of knowledge and belief and that I understand the limitations and conditions set forth on the reverse side of this form.

Charles Delaney — Charles D Jones
ped or Printed Name — Signature [ ] Land Owner [ ] Lessee of Wellsite — Date

17. If construction plans have been coordinated with Arizona Department of Environmental Quality, who is the agency contact? Ms. Ana Vargus

If construction plans have been coordinated with Arizona Department of Water Resources, who is the agency contact? None

18. WELL CONSTRUCTION PLAN:

a) Drilling method (mud rotary, hollow-stem auger, etc.) Mud Rotary

b) Borehole diameters: 12 inches from 0 feet to 250 feet.
7 7/8 inches from 250 feet to 800 feet.

c) Casing materials (PVC, steel, hollow-stem auger, etc.)

material Schedule 40 low carbon steel diameter 8 inches from + 2 feet to 250 feet.
material Schedule 40 low carbon steel diameter 4 inches from + 1.5 feet to 760 feet.

d) Method of sealing at reductions grout seal

e) Annular seal materials (cement, grout, etc.); method of placement (tremied, circulated):

material cement grout method tremied from 0 feet to 748 feet.
material bentonite method tremied from 748 feet to 753 feet.

f) Filter packs (state material):

material silica sand from 753 feet to 800 feet.
material _____ from _____ feet to _____ feet.

g) Perforation or screen specification:

type 4-inch, type 304 stianless steel from 760 feet to 800 feet.
type _____ from _____ feet to _____ feet.

h) Method of well development (bail, air lift, surge) Air-lift, jet, surge and pump

i) Will surface or conductor casing extend above grade? Yes XX No _____

19. Include detailed construction diagram showing expected water depth in feet below land surface, and details of vault, if specified.

GENERAL INSTRUCTION

1. Please submit two original notices, with original signatures, and check or money order (no cash) in the amount of $ 10.00, to P.O. Box 458, Phoenix, Arizona 85001-0458 or hand deliver to 500 North Third Street, Phoenix, Arizona 85004-3903.

CONDITIONS

1. If an individual other than the land owner or lessee, sighns this notice, an original letter of authorization fromthe land owner/lessee, stating that the individuaal has permission to sign this specific Notice on their behalf, shall accompany the Notice of Intention to Drill a Monitor/Piezometer Well form.

2. Construction and abandonment standards for all wells shall be in accordance with A.A.C. R12-15-811 and R12-15-816.

3.. Drilling of the well shall be completed within one year after the date of Notice.

4. A Well Driller Report is required within thirty days of completion of drilling. A Completion Report is required to be filed with the Department within thirty days after installation of pump equipment for monitor wells.

5. Pump equipment may not be installed on a well drilled for piezometer purposes. If a monitor will is pumped, pumping is limited to the maximum amount required for monitor purposes, **but in no case may exceed 35 gallons per minute and an annual volume of 10 acre feet total.**

6. A.A.C. Rule R12-15-811.H.2, requires that: "A monitor well shall be identified as such on the vault cover or at the top of the steel casing. Identification information will include well registration number."

7. Special construction standards, required pursuant to A.A.C. Rule R12-15-821: _____

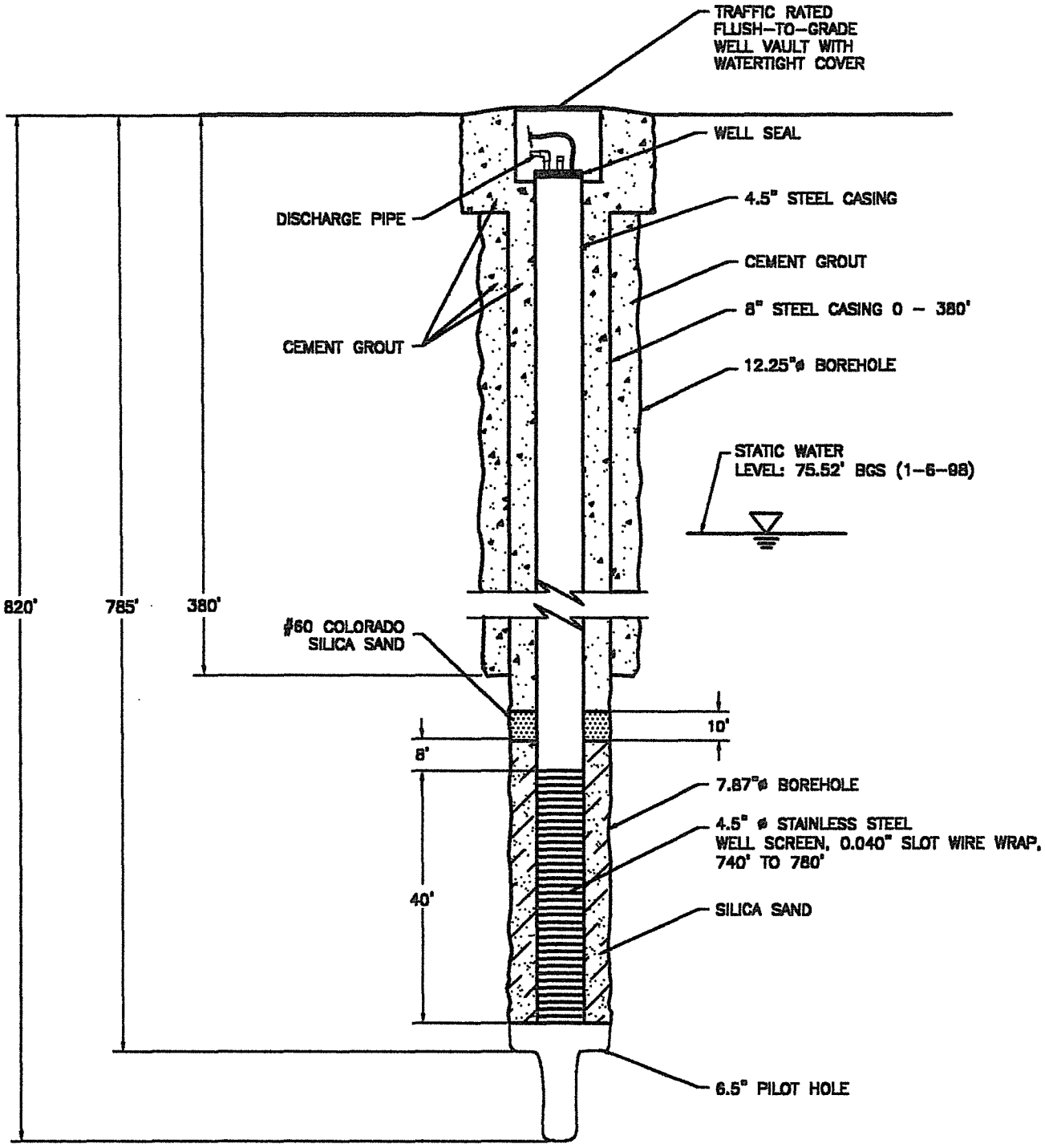

NOT TO SCALE

UNITED INDUSTRIAL CORPORATION	DATE: 7-27-98
	DESIGNED:
DEEP WELL MW-6L SECTION VIEW	CHECKED:
	APPROVED:
	DRAWN: JDD
	PROJ.: N386-113
HSI GEOTRANS A Tetra Tech Company	

.../IC-REPORT/WELL-DDH.DWG

MW-6L

SOIL BOREHOLE LOG

SITE NAME AND LOCATION	DRILLING METHOD:	BORING NO.
808708313 United Industrial Corporation West Osborn Complex Phoenix, AZ	Conventional Mud Rotary 6 1/2" two cone open-faced button bit	MW6L
	SAMPLING METHOD:	SHEET 1 OF 11
	1) Drill cuttings	DRILLING
	2) Drive Samples	START / FINISH
	WATER LEVEL	TIME 0715 / TIME 0815
	TIME	
	DATE	DATE 8/21/96 / DATE 8/27/96
DATUM: APPROXIMATE ELEVATION:	CASING DEPTH	

DRILLING RIG: Gardner-Denver 1500

SURFACE CONDITIONS: sand and gravel

ANGLE: vertical HAMMER WEIGHT: -

SAMPLE HAMMER TORQUE: - FT.-LBS

DRILLING CONTRACTOR Stewart Bros. Drilling Co. Milan, NM

DEPTH IN FEET	Soil Graph	Inches Driven / Inches Recovered	Sample No / Sample Depth	Time to Drive Sample	FID(ppm)	SAMPLE NUMBER AND DESCRIPTION OF MATERIAL
0	SM					0-20': SILTY SAND (SM): multi-colored sand, loose, no odor; 70-80% medium to coarse-grained sand; 20-30% medium brown silt
5						
10						
15						
20	SM					20'-30': SILTY SAND (SM): medium brown, soft, no odor; 50-60% medium to coarse-grained sand; 40-50% medium brown silt
25						
30	SP					30'-60': SAND (SP): multi-colored, loose, no odor; medium to coarse-grained sand
35						
40						
45						
50						
55						
60	SP					60'-75': SAND (SP): multi-colored sand, loose, no odor; medium to coarse-grained sand; 5-10% medium brown silt
65						
70						

LOGGED BY Richard J. Johnson, III CHECKED BY Richard J. Johnson, III

DATE 8/21/96-8/27/96

SOIL BOREHOLE LOG

SITE NAME AND LOCATION	DRILLING METHOD:	BORING NO
808708313 United Industrial Corporation West Osborn Complex Phoenix, AZ	Conventional Mud Rotary 6 1/2" two cone open-faced button bit	MW6L
	SAMPLING METHOD:	SHEET 2 OF 11
	1) Drill cuttings 2) Drive Samples	DRILLING START / FINISH
	WATER LEVEL / TIME / DATE / CASING DEPTH	TIME 0715 / TIME 0815 DATE 8/21/96 / DATE 8/27/96
DATUM: APPROXIMATE ELEVATION:		

DRILLING RIG: Gardner-Denver 1500 | SURFACE CONDITIONS: sand and gravel

ANGLE: vertical HAMMER WEIGHT: -

SAMPLE HAMMER TORQUE: - FT.-LBS

DEPTH IN FEET	Soil Graph	Inches Driven / Inches Recovered	Sample No / Sample Depth	Time to Drive Sample	FID(ppm)	SAMPLE NUMBER AND DESCRIPTION OF MATERIAL
75	SP					75'-85': SANDY SILT (ML): medium brown, soft, no odor; 50-60% silt; 40-50% medium to coarse-grained sand, caliche
80	ML					
85						85'-100': SAND (SP): multi-colored, loose, no odor; medium to coarse-grained sand; minor subangular gravel to 1/4"
90	SP					[Drive Sample: 90'-100': with 3-5% clay]
95						
100		16 / 15	- / 100			[Drive Sample: 100'-101.5': SAND (SW): multi-colored, wet, loose, no odor; 80-90% fine to coarse-grained sand; 5-10% subangular gravel to 3/4"; 5-10% silt]
105	SW					100'-115': SAND (SW): mulit-colored, loose, no odor; fine to coarse-grained sand
110						
115						115'-130': SAND (SW): multi-colored sand, loose, no odor; 80-90% fine to coarse-grained sand; 10-20% medium brown clay; minor subangular gravel to 1/4"
120	SW					
125						
130	CL					130'-160': SILTY CLAY (CL): medium brown, soft, no odor, minor sand
135						
140						Mud Viscosity=40 seconds
145						

DRILLING CONTRACTOR Stewart Bros. Drilling Co. Milan, NM

LOGGED BY Richard J. Johnson, III

DATE 8/21/96-8/27/96 CHECKED BY Richard J. Johnson, III

SOIL BOREHOLE LOG

SITE NAME AND LOCATION	DRILLING METHOD:	BORING NO.
808708313 United Industrial Corporation West Osborn Complex Phoenix, AZ	Conventional Mud Rotary 6 1/2" two cone open-faced button bit	MW6L
	SAMPLING METHOD:	SHEET 3 OF 11
	1) Drill cuttings 2) Drive Samples	DRILLING START / FINISH
	WATER LEVEL / TIME / DATE / CASING DEPTH	TIME 0715 / TIME 0815 DATE 8/21/96 / DATE 8/27/96
DATUM: APPROXIMATE ELEVATION:		

DRILLING RIG: Gardner-Denver 1500 | SURFACE CONDITIONS: sand and gravel

ANGLE: vertical | HAMMER WEIGHT: -

SAMPLE HAMMER TORQUE: - FT.-LBS

DRILLING CONTRACTOR Stewart Bros. Drilling Co. Milan, NM

DEPTH IN FEET	Soil Graph	Inches Driven / Inches Recovered	Sample No / Sample Depth	Time to Drive Sample	FID(ppm)	SAMPLE NUMBER AND DESCRIPTION OF MATERIAL
150	CL					
155						
60						160'-190': SANDY CLAY (CL): medium brown, soft, no odor; 30-40% fine to coarse-grained sand and caliche
165						
170						
175	CL					
180						
185						
190						190'-200': SANDY CLAY (CL): medium brown, soft, no odor; 40-50% fine to coarse-grained sand
195	CL					
200		24 / 12	- / 200	57"		[Drive Sample: 200'-201': SANDY GRAVEL (GW): multi-colored, wet, loose, no odor; 40-50% fine to coarse-grained sand; 40-50%
205	CL					subangular gravels to 1/2", probably settled out of drilling mud] 200'-210': SANDY CLAY (CL): same as above from 160'-190'
10						210'-220': CLAYEY GRAVEL (GC): medium brown, soft, no odor; 60-70% fine-grained sand to subangular gravels to 3/8"; 30-40% silty
215	GC					clay
220	CL					220'-350': SILTY CLAY (CL): medium brown, soft, no odor; 10-20% fine to coarse-grained sand and caliche

LOGGED BY Richard J. Johnson, III CHECKED BY Richard J. Johnson, III

DATE 8/21/96-8/27/96

SOIL BOREHOLE LOG

SITE NAME AND LOCATION	DRILLING METHOD:	BORING NO
808708313 United Industrial Corporation West Osborn Complex Phoenix, AZ	Conventional Mud Rotary 6 1/2" two cone open-faced button bit	MW6L
	SAMPLING METHOD:	SHEET 4 OF 11
	1) Drill cuttings 2) Drive Samples	DRILLING

					START	FINISH
WATER LEVEL					TIME 0715	TIME 0815
TIME						
DATE					DATE 8/21/96	DATE 8/27/96
CASING DEPTH						

DATUM: APPROXIMATE ELEVATION:

DRILLING RIG: Gardner-Denver 1500

SURFACE CONDITIONS: sand and gravel

ANGLE: vertical HAMMER WEIGHT: -

SAMPLE HAMMER TORQUE: - FT.-LBS

DEPTH IN FEET	Soil Graph	Inches Driven / Inches Recovered	Sample No / Sample Depth	Time to Drive Sample	FID(ppm)	SAMPLE NUMBER AND DESCRIPTION OF MATERIAL
225	CL					
230						
235						
240						
245						
250						
255						
260						
265						
270						
275						
280						
285						
290						
295						

DRILLING CONTRACTOR Stewart Bros. Drilling Co. Milan, NM

LOGGED BY Richard J. Johnson, III

DATE 8/21/96-8/27/96 CHECKED BY Richard J. Johnson, III

SOIL BOREHOLE LOG

SITE NAME AND LOCATION	DRILLING METHOD:	BORING NO
808708313 United Industrial Corporation West Osborn Complex Phoenix, AZ	Conventional Mud Rotary 6 1/2" two cone open-faced button bit	MW6L
	SAMPLING METHOD:	SHEET 5 OF 11
	1) Drill cuttings 2) Drive Samples	DRILLING START / FINISH
	WATER LEVEL / TIME / DATE / CASING DEPTH	TIME 0715 / TIME 0815 DATE 8/21/96 / DATE 8/27/96
DATUM: APPROXIMATE ELEVATION:		

DRILLING RIG: Gardner-Denver 1500

SURFACE CONDITIONS: sand and gravel

ANGLE: vertical HAMMER WEIGHT: -

SAMPLE HAMMER TORQUE: - FT.-LBS

DRILLING CONTRACTOR Stewart Bros. Drilling Co. Milan, NM

DEPTH IN FEET	Soil Graph	Inches Driven / Inches Recovered	Sample No / Sample Depth	Time to Drive Sample	FID(ppm)	SAMPLE NUMBER AND DESCRIPTION OF MATERIAL
300	CL					Mud Viscosity=68 seconds
305						
310						
315						
320						
325						
330						*Geophysical logs indicate that the sand lens extends from 340'-360'. Problems with lost circulation and a wash-out
335						zone from 351'-361' probably caused a delay in drilling cutting returns and larger volumes of sands in cuttings
340						resulting in the sand lens being logged from 350'-410'.
345						
350	SW					350'-410': SAND (SW): multi-colored, loose, no odor; fine to coarse-grained sand and angular rock fragments*
355						[350'-370': large mud loss; mixed newmud; mud viscosity =45 seconds; mixed LCM with mud; washout zone from 351'-361'
360						indicated on caliper geophysical log]
365						[Drive Sample: 371': SILTY SAND (SM): dark brown, wet, soft, no odor; 40-50% very fine sand, 40-50% silt, plus 2 large rock fragments
370		6 / 6	- / 370			1" to 1 1/2" in size]

LOGGED BY Richard J. Johnson, III CHECKED BY Richard J. Johnson, III

DATE 8/21/96-8/87/96

SOIL BOREHOLE LOG

SITE NAME AND LOCATION	DRILLING METHOD:	BORING NO.
808708313 United Industrial Corporation West Osborn Complex Phoenix, AZ	Conventional Mud Rotary 6 1/2" two cone open-faced button bit	MW6L
	SAMPLING METHOD:	SHEET 6 OF 11
	1) Drill cuttings 2) Drive Samples	DRILLING START / FINISH
	WATER LEVEL / TIME / DATE / CASING DEPTH	TIME 0715 / TIME 0815 DATE 8/21/96 / DATE 8/27/96
DATUM: APPROXIMATE ELEVATION:		

DRILLING RIG: Gardner-Denver 1500 | SURFACE CONDITIONS: sand and gravel

ANGLE: vertical HAMMER WEIGHT: -

SAMPLE HAMMER TORQUE: - FT.-LBS

DEPTH IN FEET	Soil Graph	Inches Driven / Inches Recovered	Sample No / Sample Depth	Time to Drive Sample	FID(ppm)	SAMPLE NUMBER AND DESCRIPTION OF MATERIAL
375						
380						
385						
390	SW	8 / 8	- / 390			[Drive Sample: 390': SILTY SAND (SM): medium brown, moist, soft, no odor; very fine sand; sample not representative of drill cuttings]
395						
400						[Drive Sample: 390'-410': 5-10% CLAY]
405						
410						410'-420': CLAYEY SAND (SC): mulit-colored sand, soft, no odor; fine to coarse-grained sand; 20-30% medium brown clay
415	SC					
420						420'-440': CLAYEY GRAVEL (GC): medium brown, soft, no odor; 50-60% fine-grained sand to 1/4" subangular gravel; 40-50% silty clay
425						
430	GC					
435						
440						440'-530': CLAYEY SILT (ML): medium brown, no odor; 60-90% silt; 10-30% clay; clay content increasing downhole
445	ML					

DRILLING CONTRACTOR Stewart Bros. Drilling Co. Milan, NM

LOGGED BY Richard J. Johnson, III CHECKED BY Richard J. Johnson, III

DATE 8/21/96-8/27/96

SOIL BOREHOLE LOG

SITE NAME AND LOCATION	DRILLING METHOD:	BORING NO.
808708313 United Industrial Corporation West Osborn Complex Phoenix, AZ	Conventional Mud Rotary 6 1/2" two cone open-faced button bit	MW6L
	SAMPLING METHOD:	SHEET 7 OF 11
	1) Drill cuttings 2) Drive Samples	DRILLING START / FINISH
	WATER LEVEL / TIME / DATE / CASING DEPTH	TIME 0715 / TIME 0815 DATE 8/21/96 / DATE 8/27/96
DATUM: APPROXIMATE ELEVATION:		

DRILLING RIG: Gardner-Denver 1500 | SURFACE CONDITIONS: sand and gravel

ANGLE: vertical | HAMMER WEIGHT: -

SAMPLE HAMMER TORQUE: - FT.-LBS

DRILLING CONTRACTOR Stewart Bros. Drilling Co. Milan, NM

DEPTH IN FEET	Soil Graph	Inches Driven / Inches Recovered	Sample No / Sample Depth	Time to Drive Sample	FID(ppm)	SAMPLE NUMBER AND DESCRIPTION OF MATERIAL
450	ML					
455						
60						
465						
470						
475						
480						
485						
490						
495						[Drive Sample: 495': CLAYEY SILTY SAND (SM): medium brown; 60% fine to medium-grained sand; 30% silt; 10% clay]
500						
505						
10						
515						
520						

LOGGED BY Richard J. Johnson, III CHECKED BY Richard J. Johnson, III

DATE 8/21/96-8/27/96

SOIL BOREHOLE LOG

SITE NAME AND LOCATION	DRILLING METHOD:	BORING NO.
808708313 United Industrial Corporation West Osborn Complex Phoenix, AZ	Conventional Mud Rotary 6 1/2" two cone open-faced button bit	MW6L
	SAMPLING METHOD:	SHEET 8 OF 11
	1) Drill cuttings 2) Drive Samples	DRILLING

						START	FINISH
WATER LEVEL						TIME 0715	TIME 0815
TIME							
DATE						DATE 8/21/96	DATE 8/27/96
CASING DEPTH							

DATUM: APPROXIMATE ELEVATION:

DRILLING RIG: Gardner-Denver 1500 SURFACE CONDITIONS: sand and gravel

ANGLE: vertical HAMMER WEIGHT: -

SAMPLE HAMMER TORQUE: - FT.-LBS

DEPTH IN FEET	Soil Graph	Inches Driven / Inches Recovered	Sample No / Sample Depth	Time to Drive Sample	FID(ppm)	SAMPLE NUMBER AND DESCRIPTION OF MATERIAL
525	ML					
530						530'-820': SILTY CLAY (CL): medium brown. moderately well indurated; 80-90% clay; 10-20% silt; increasing plasticity down hole
535						
540						
545						
550						
555	CL					
560						
565						
570						
575						
580						
585						
590						
595						

DRILLING CONTRACTOR Stewart Bros. Drilling Co. Milan, NM

LOGGED BY Richard J. Johnson, III CHECKED BY Richard J. Johnson, III

DATE 8/21/96-8/27/96

SOIL BOREHOLE LOG

SITE NAME AND LOCATION	DRILLING METHOD:	BORING NO.
808708313 United Industrial Corporation West Osborn Complex Phoenix, AZ	Conventional Mud Rotary 6 1/2" two cone open-faced button bit	MW6L
	SAMPLING METHOD:	SHEET 9 OF 11
	1) Drill cuttings 2) Drive Samples	DRILLING START / FINISH
	WATER LEVEL / TIME / DATE / CASING DEPTH	TIME 0715 / TIME 0815 DATE 8/21/96 / DATE 8/27/96
DATUM: APPROXIMATE ELEVATION:		

DRILLING RIG: Gardner-Denver 1500

SURFACE CONDITIONS: sand and gravel

ANGLE: vertical HAMMER WEIGHT: -

SAMPLE HAMMER TORQUE: - FT.-LBS

DEPTH IN FEET	Soil Graph	Inches Driven / Inches Recovered	Sample No / Sample Depth	Time to Drive Sample	FID(ppm)	SAMPLE NUMBER AND DESCRIPTION OF MATERIAL
600	CL					
605						
610						
615						
620						
625						
630						
635						
640						
645						
650						
655						
660						
665						
670						

DRILLING CONTRACTOR Stewart Bros. Drilling Co. Milan, NM

LOGGED BY Richard J. Johnson, III

DATE 8/21/96-8/27/96 CHECKED BY Richard J. Johnson, III

SOIL BOREHOLE LOG

SITE NAME AND LOCATION

808708313
United industrial Corporation
West Osborn Complex
Phoenix, AZ

DATUM: APPROXIMATE ELEVATION:

DRILLING METHOD:					BORING NO.	
Conventional Mud Rotary					MW6L	
6 1/2" two cone open-faced button bit					SHEET	
SAMPLING METHOD:					10 OF 11	
1) Drill cuttings					DRILLING	
2) Drive Samples					START	FINISH
WATER LEVEL					TIME 0715	TIME 0815
TIME						
DATE					DATE 8/21/96	DATE 8/27/96
CASING DEPTH						

DRILLING RIG: Gardner-Denver 1500

SURFACE CONDITIONS: sand and gravel

ANGLE: vertical HAMMER WEIGHT: -

SAMPLE HAMMER TORQUE: - FT.-LBS

DEPTH IN FEET	Soil Graph	Inches Driven / Inches Recovered	Sample No / Sample Depth	Time to Drive Sample	FID(ppm)	SAMPLE NUMBER AND DESCRIPTION OF MATERIAL
675						
680						
685						
690						
695						
700	CL					
705						
710						
715						
720						
725						
730						
735						
740						
745						

DRILLING CONTRACTOR Stewart Bros. Drilling Co. Milan, NM

LOGGED BY Richard J. Johnson, III

DATE 8/21/96-8/27/96 CHECKED BY Richard J. Johnson, III

SOIL BOREHOLE LOG

SITE NAME AND LOCATION 808708313 United Industrial Corporation West Osborn Complex Phoenix, AZ	DRILLING METHOD: Conventional Mud Rotary 6 1/2" two cone open-faced button bit	BORING NO. MW6L	
	SAMPLING METHOD: 1) Drill cuttings 2) Drive Samples	SHEET 11 OF 11	
		DRILLING	
		START	FINISH
	WATER LEVEL	TIME 0715	TIME 0815
	TIME		
	DATE	DATE 8/21/96	DATE 8/27/96
DATUM: APPROXIMATE ELEVATION:	CASING DEPTH		

DRILLING RIG: Gardner-Denver 1500

SURFACE CONDITIONS: sand and gravel

ANGLE: vertical HAMMER WEIGHT: -

SAMPLE HAMMER TORQUE: - FT.-LBS

DEPTH IN FEET	Soil Graph	Inches Driven / Inches Recovered	Sample No / Sample Depth	Time to Drive Sample	FID(ppm)	SAMPLE NUMBER AND DESCRIPTION OF MATERIAL
750	CL					
755						
760						
765						
770						770'-780': trace fine to medium-grained sand
775						
780						
785						
790						790'-800': trace fine to medium-grained sand
795						
800						
805						
810						
815						
820						820': TD

DRILLING CONTRACTOR Stewart Bros. Drilling Co. Milan, NM

LOGGED BY Richard J. Johnson, III

DATE 8/21/96-8/27/96 CHECKED BY Richard J. Johnson, III

ELECTRIC LOGS FOR MW-6L

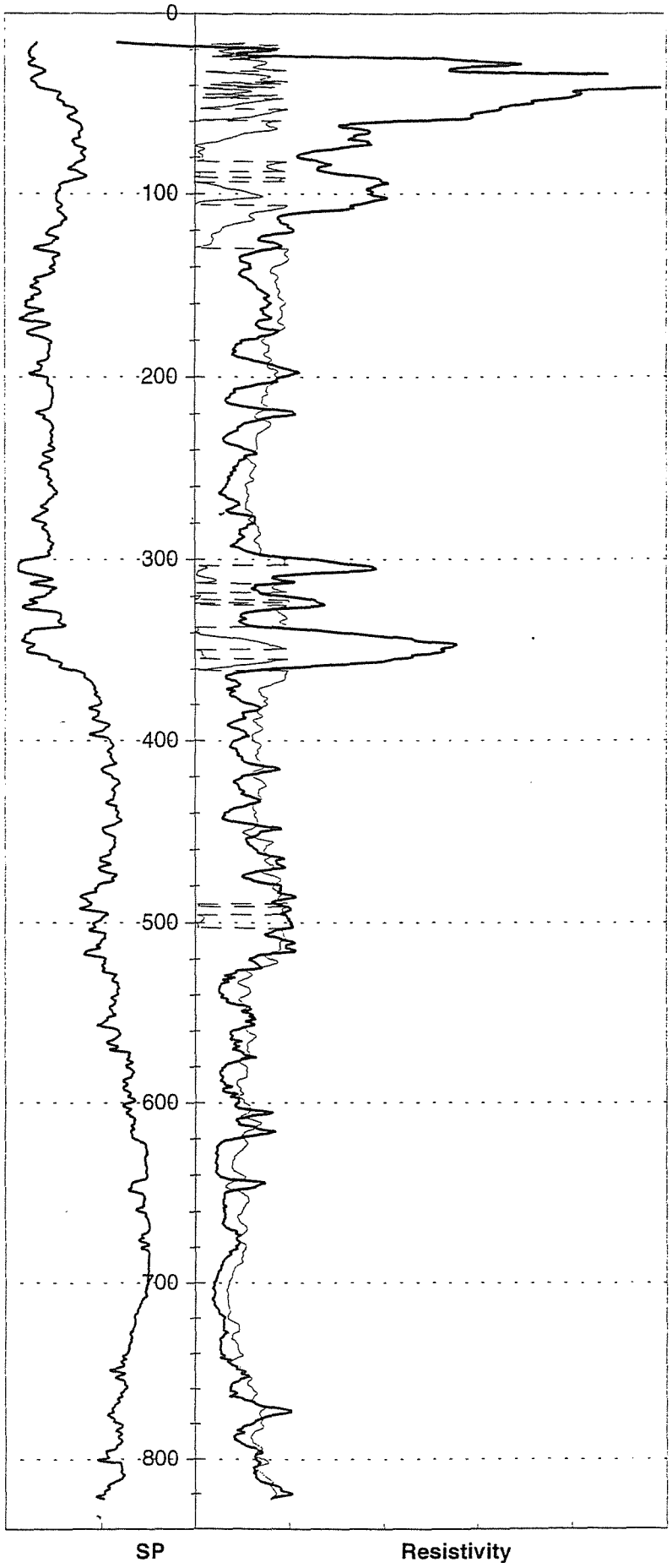

HSI GEOTRANS

NATURAL GAMMA AND NEUTRON LOG FOR MW-6L

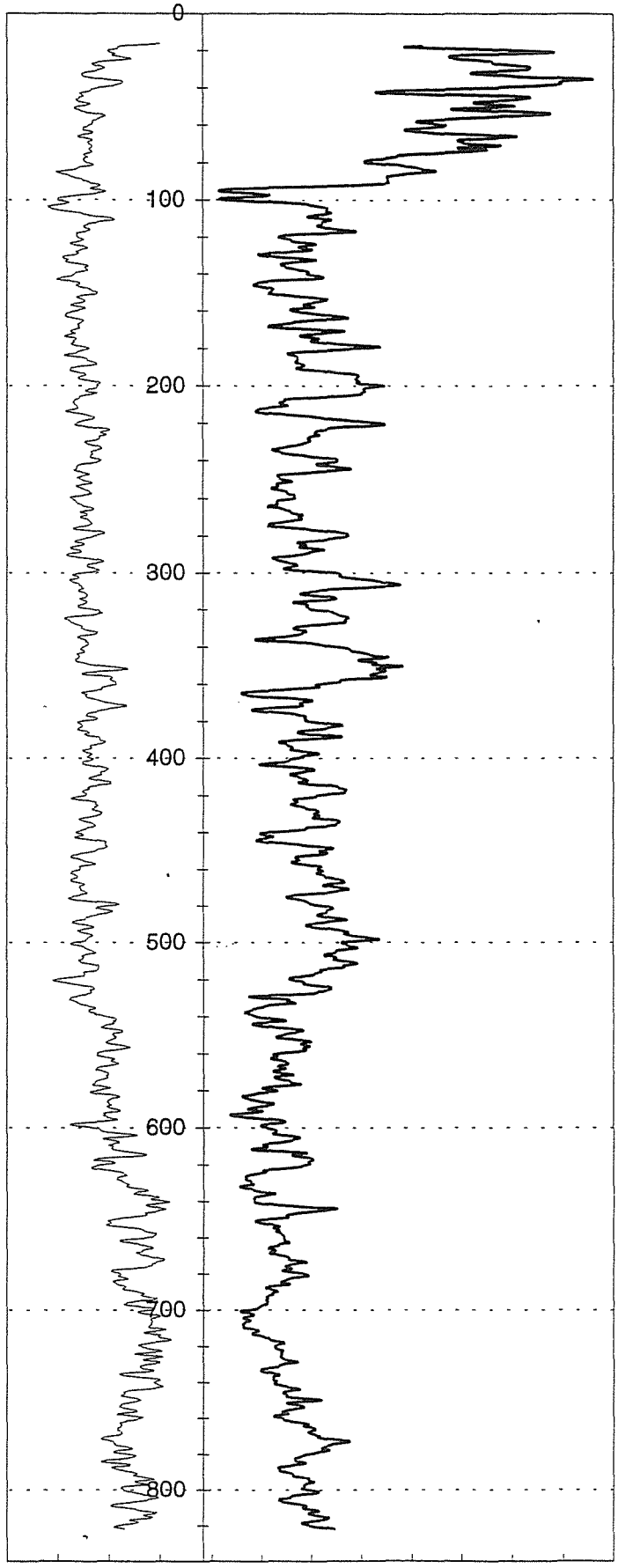

Natural Gamma

Neutron

HSI GEOTRANS

MONITOR WELL CONSTRUCTION SUMMARY

Well No. MW-6L

Boring No. X-Ref:

Map Coords: 3052 N, 3262 E

Elevation Ground Level:

Job Number: 808708313

Top of Casing: 1098.26

Drilling Summary:		Construction Time Log: **Start** 8/21/96 **Finish** 9/5/96				
Total Depth	820 feet		Date	Time	Date	Time
Borehole Diameter	7 ⅞ inches	Drilling (6 1/2")	8/21/96	0930	8/28/96	0820
Casing Stick-Up	0	(12 1/4")	8/27/96	1415	8/28/96	1530
Driller	Stewart Brothers Drilling Co.	(7 ⅞")	8/30/96	1230	9/3/96	0945
1700Rig	Gardner Denver 1500					
Bit(s)	0-820 feet: 6 1/2" tricone 0-380 feet: 12 1/4" tricone 380-785 feet: 7 ⅞" tricone	Geophys. Logging	8/27/96	1000	8/27/96	1230
Drilling Fluid	Bentonite mud and polymers	Casing: 8 ⅝"	8/29/96	0900	8/29/96	1500
Protective Casing	None	Casing: 4 ½"	9/3/96	1230	9/3/96	2045
Comments:						
		Sand Pack:	9/4/96	0900	9/4/96	1530
		Cementing:	9/4/96	1530	9/5/96	1100
		Development:				

Site Name: West Osborn Complex

Location: 39th Avenue and Earll Drive

Well Design & Specifications

Basis: Geologic Log x Geophysical Log x

Casing String(s): C = Casing S = Screen

Well Development:

Depth (ft)	String (C1, S1, etc.)	Elevation (ft)
0 to 380	C1- 8" LCS	
0 to 740	C2- 4.5" LCS	
740-780	S1 - 4.5" stainless steel	

Casing:	C1	8 5/8" Low carbon steel blank casing 0.188 wall
	C2	4.5" Low carbon steel blank casing 0.188 wall
Screen:	S1	4.5 " Stainless steel, 0.040" slot wire wrap
	S2	
Filter Pack:		732'-785': 8-12 Colorado silica sand.
Grout Seal:		0-772': neat cement with 3.5% bentonite; 0-360': neat
		cement with 3.5% bentonite on outside of 8 5/8" surface casing
Seal:		732'-722' #60 Colorado silica sand

Stabilization Test Data:

Time	pH	Spec. Cond. µs/m	Temp (C)
Pumped			

Supervised By: David Broermann

Date:

STATE OF ARIZONA
DEPARTMENT OF WATER RESOURCES
GROUNDWATER MANAGEMENT SUPPORT SECTION
MAIL TO: P.O. BOX 458, PHOENIX, ARIZONA 85001-0458
500 NORTH THIRD STREET, PHOENIX, ARIZONA 85004-3903
PHONE (602) 417-2470 FAX (602) 417-2422

RECEIVED JUN 28 1996 GROUNDWATER MGT

NOTICE OF INTENTION TO DRILL MONITOR/PIEZOMETER WELL

PLEASE READ GENERAL INSTRUCTIONS ON REVERSE SIDE OF THIS FORM BEFORE COMPLETING.

Section §45-596, Arizona Revised Statues provide: Prior to drilling a monitor or piezometer well, a Notice of Intention to Drill shall be filed with the Department.

1 Well/Land Location:

2N (Township) 2E (Range) 27 (Section)

NW ¼ (10 Acre) SW ¼ (40 Acre) SE ¼ (160 Acre)

2. Position location of the well on the land:

Latitude 33 o 28 ' 58 "

Longitude 112 o 08 ' 34 "

3. County: Maricopa

4. Owner of the land of wellsite:

City of Phoenix (Name)
200 West Washington (Address)
Phoenix (City) Az. (Sate) 85003 (Zip)

Telephone Number 261-8812

5. Lessee of the land of wellsite:

NA (Name)
(Address)
(City) (Sate) (Zip)

Telephone Number

6. Owner of well:

United Industrial Corporation (Name)
4636 East University (Address)
Phoenix (City) Az (State) 85034 (Zip)

Phone Number (602) 894-2800

7. Consulting firm:

Hydro-Search, Inc. (Name)
David Broermann (Contact Person)
(602) 894-2800 (Phone Number)

8. Purpose of well drilled pursuant to this notice:

Monitor XXXXXX
Piezometer

9. If for deepening or modifying, list well registration number:

55-

FOR DEPARTMENT USE ONLY

File No. A(2-2)27dcB
Filed 6-28-96 By VB
Input By

DUPLICATE
Mailed 7-9-96 By VB
Registration 55- 558698
AMA/INA PHX
W/S 07 S/B 04

10. Will this proposed well be associated with a permit: Yes ___ No XX
If yes, Permit No.

11. Construction will start:

July (Month) 30 (Day) 1996 (Year)

12. Period well will remain in use:

10 ~~Month~~/Years

13. For monitoring wells, is pump equipment to be installed?

Yes XXXX No

(a) If yes, design pump capacity:

10 - 15 GPM

(b) What use will be made of the water:

Sampled and disposed

14. Drilling Firm:

Stewart Brothers Drilling Co. (Name)
P.O. Box 2067 (Address)
Milans (City) NM (State) 87021 (Zip)

1-505-287-2986 (Telephone Number)

314 (DWR License Number)

A-4 (ROC License Category)

15. Proposed method of abandonment of well after project is completed: In accordance with A.A.C. R12-15-811, pursuant to R12-15-816

16. Is this well to monitor existing contamination? _____ **Potential contamination** XX **.Please explain:** Monitor wells will monitor potential-existing contamination previously identified in other monitor wells.

I state that this Notice is filed in compliance with Rule A.A.C. R12-15-809 and R12-15-816(F), and is complete and correct to the best of my knowledge and belief and that I understand the limitations and conditions set forth on the reverse side of this form.

FRANK M. ALES — **Typed or Printed Name**

Frank M. Ales — **Signature [✓] Land Owner [ ] Lessee of Wellsite**

7/2/96 — **Date**

17. **If construction plans have been coordinated with Arizona Department of Environmental Quality, who is the agency contact?** Ms. Ana Vargus

If construction plans have been coordinated with Arizona Department of Water Resources, who is the agency contact? None

18. **WELL CONSTRUCTION PLAN:**

a) Drilling method (mud rotary, hollow-stem auger, etc.) Mud Rotary

b) Borehole diameters: 12 inches from 0 feet to 250 feet.
7 7/8 inches from 250 feet to 800 feet.

c) Casing materials (PVC, steel, hollow-stem auger, etc.)

material Schedule 40 low carbon steel diameter 8 inches from 2 feet to 250 feet.
material Schedule 40 low carbon steel diameter 4 inches from 1.5 feet to 760 feet.

d) Method of sealing at reductions grout seal

e) Annular seal materials (cement, grout, etc.); method of placement (tremied, circulated):

material cement grout method tremied from 0 feet to 748 feet.
material bentonite method tremied from 748 feet to 753 feet.

f) Filter packs (state material):
material silica sand from 753 feet to 800 feet.
material _____ from _____ feet to _____ feet.

g) Perforation or screen specification:

type 4-Inch, type 304 stainless steel from 760 feet to 800 feet.
type _____ from _____ feet to _____ feet.

h) Method of well development (bail, air lift, surge) Air-lift, jet, surge and pump

i) Will surface or conductor casing extend above grade? Yes XX No _____

19. **Include detailed construction diagram showing expected water depth in feet below land surface, and details of vault, if specified.**

GENERAL INSTRUCTION

1. **Please submit two original notices, with original signatures, and check or money order (no cash) in the amount of $ 10.00, to P.O. Box 458, Phoenix, Arizona 85001-0458 or hand deliver to 500 North Third Street, Phoenix, Arizona 85004-3903.**

CONDITIONS

1. **If an individual other than the land owner or lessee, signs this notice, an original letter of authorization from the land owner/lessee, stating that the individual has permission to sign this specific Notice on their behalf, shall accompany the Notice of Intention to Drill a Monitor/Piezometer Well form.**

2. **Construction and abandonment standards for all wells shall be in accordance with A.A.C. R12-15-811 and R12-15-816.**

3. **Drilling of the well shall be completed within one year after the date of Notice.**

4. **A Well Driller Report is required within thirty days of completion of drilling. A Completion Report is required to be filed with the Department within thirty days after installation of pump equipment for monitor wells.**

5. **Pump equipment may not be installed on a well drilled for piezometer purposes. If a monitor will is pumped, pumping is limited to the maximum amount required for monitor purposes, but in no case may exceed 35 gallons per minute and an annual volume of 10 acre feet total.**

6. **A.A.C. Rule R12-15-811.H.2, requires that: "A monitor well shall be identified as such on the vault cover or at the top of the steel casing. Identification information will include well registration number."**

7. **Special construction standards, required pursuant to A.A.C. Rule R12-15-821:** _____

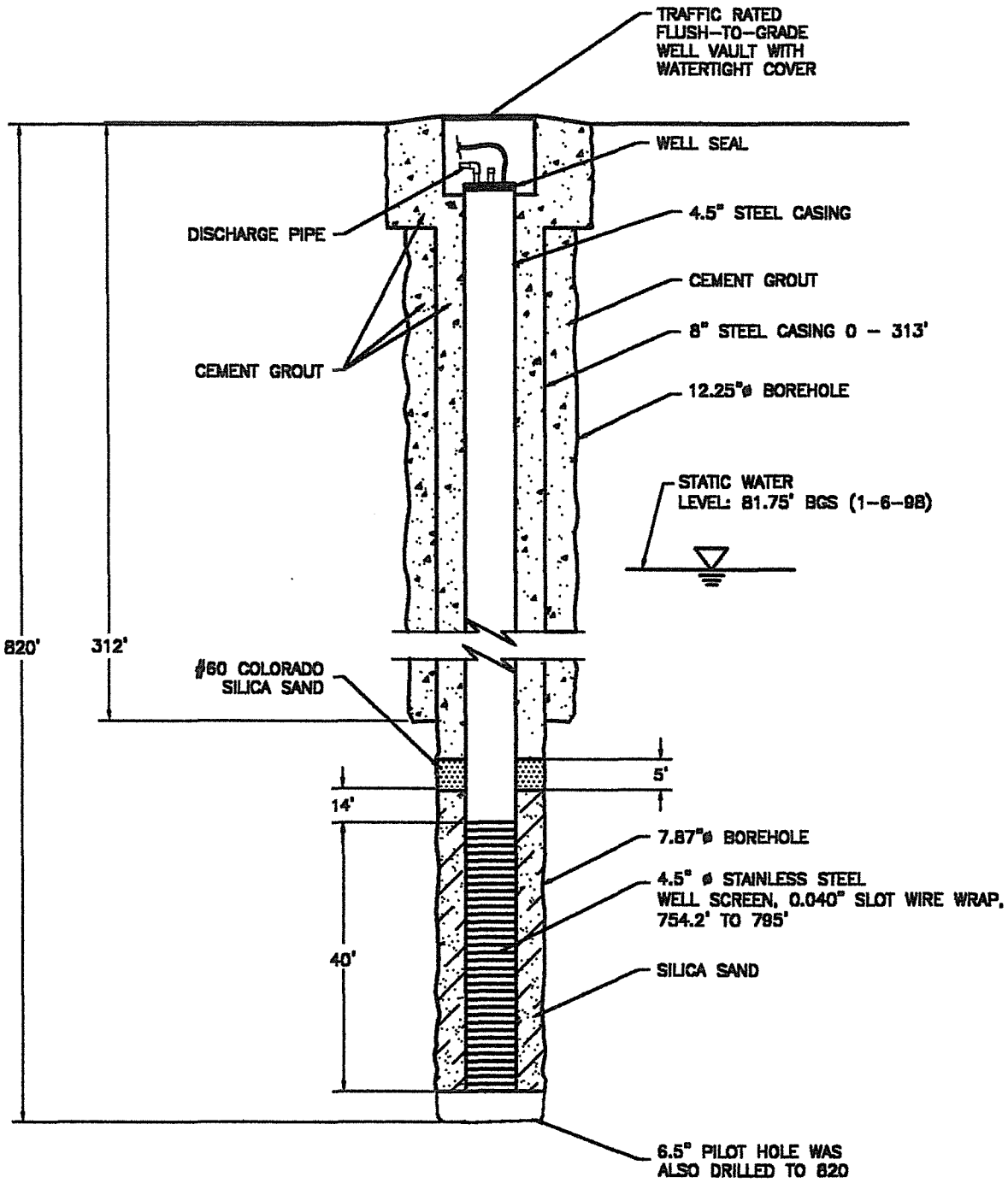

NOT TO SCALE

UNITED INDUSTRIAL CORPORATION	DATE: 7-27-98
DEEP WELL MW-7L SECTION VIEW	DESIGNED:
	CHECKED:
	APPROVED:
	DRAWN: JDD
	PROJ.: N386-113
HSI GEOTRANS A Tetra Tech Company	

MW-7L

SOIL BOREHOLE LOG

SITE NAME AND LOCATION	DRILLING METHOD:	BORING NO.
808708313 United Industrial Corporation West Osborn Complex Phoenix, AZ	Conventional Mud; 6.5" open-faced two cone bit and 6.5" open-faced tricone	MW-7 L
	SAMPLING METHOD:	SHEET 1 OF 11
	1) Drill Cuttings	DRILLING
	2) Drive Samples	START / FINISH
	WATER LEVEL / TIME / DATE / CASING DEPTH	START TIME 1315, DATE 7/17/96; FINISH TIME 1445, DATE 7/29/96
DATUM: APPROXIMATE ELEVATION:		

DRILLING RIG: Gardner-Denver 1500

ANGLE: vertical HAMMER WEIGHT: -

SAMPLE HAMMER TORQUE: - FT.-LBS

SURFACE CONDITIONS:

DEPTH IN FEET	Soil Graph	Inches Driven / Inches Recovered	Sample No / Sample Depth	Time to Drive Sample	FID(ppm)	SAMPLE NUMBER AND DESCRIPTION OF MATERIAL
0	SW					0-18': GRAVELLY SAND (SW): white and light brown sediment, dry, loose, no odor; 80-90% medium to coarse-grained sand; 10-20%
5	SW					subangular gravel to 1/2"
10	SW					
15	SW					
20	GC					18'-30': CLAYEY SANDY GRAVEL (GC): medium brown, dry, soft, no odor; 60-70% coarse-grained sand to subangular gravel up to
25	GC	24 / 24	1 / 22	NA	0	1"; 30-40% clay
30	SW					
35	SW					30'-40': same as 0-18'; multi-colored sediments
40	SW	24 / 14	2 / 40	NA	0	40'-50': GRAVELLY SAND (SW): multi-colored, moist, loose, no odor; 50-60% medium to fine-grained sand; 40-50% subangular to
45	SW					subrounded gravels to 1'
50	CL					
55	CL					50'-61': SILTY CLAY (CL): medium brown, soft, no odor, minor sand and gravel
60	CL	24 / 24	3 / 60	NA	0	
65	GW					61'-70': SANDY GRAVEL (GW): multi-colored, moist, loose, no odor; 50-60% subangular to subrounded gravel to 3/4"; 40-50% medium to
70	CL					coarse-grained sand

DRILLING CONTRACTOR Stewart Bros. Drilling Co. Milan, NM

LOGGED BY Richard J. Johnson, III CHECKED BY

DATE 7/17/96

SOIL BOREHOLE LOG

SITE NAME AND LOCATION	DRILLING METHOD:	BORING NO.
808708313 United Industrial Corporation West Osborn Complex Phoenix, AZ	Conventional Mud; 6.5" open-faced two cone bit and 6.5" open-faced tricone	MW-7 L
	SAMPLING METHOD:	SHEET 2 OF 11
	1) Drill Cuttings	DRILLING
	2) Drive Samples	START / FINISH
	WATER LEVEL / TIME / DATE / CASING DEPTH	TIME 1315 / TIME 1445 / DATE 7/17/96 / DATE 7/29/96
DATUM: APPROXIMATE ELEVATION:		

DRILLING RIG: Gardner-Denver 1500

SURFACE CONDITIONS:

ANGLE: vertical HAMMER WEIGHT: -

SAMPLE HAMMER TORQUE: - FT.-LBS

DEPTH IN FEET	Soil Graph	Inches Driven / Inches Recovered	Sample No / Sample Depth	Time to Drive Sample	FID(ppm)	SAMPLE NUMBER AND DESCRIPTION OF MATERIAL
75	CL					70'-100': SILTY CLAY (CL): medium brown, soft, no odor; minor sand and gravel
80	CL	24 / 24	4 / 80	NA	0	80': drive sample moist
85	CL					
90	CL					
95	CL					
100	SM	24 / 24	- / 100	NA	NA	100': drive sample wet [Drive Sample: 100'-102': SILTY SAND (SM): medium brown, wet,
105	ML					soft, no odor; 70-80% fine-grained sand; 20-30% silt] 102'-110': SILT (ML): medium brown, soft, no odor; minor fine-grained sand
110	CL					
115	CL					110'-125': SILTY CLAY (CL): medium brown, soft, no odor; 20-30% medium-grained sand to subangular gravel to 1/4"
120	CL					Mud Viscosity=43 seconds
125	CL	24 / 24	- / 125	NA	0	[Drive Sample: 125'-127': same as 110'-125' with minor sand]
130	SC					127'-135': CLAYEY SAND (SC): medium brown, loose, no odor; 70-80% medium to coarse-grained sand; 20-30% clay
135	CL					135'-150': SILTY CLAY (CL): light brown, soft, no odor; 20-30% medium to coarse-grained sand
140	CL					
145	CL					

DRILLING CONTRACTOR Stewart Bros. Drilling Co. Milan, NM

LOGGED BY Richard J. Johnson, III

DATE 7/17/96

CHECKED BY

SOIL BOREHOLE LOG

TE NAME AND LOCATION 808708313 United Industrial Corporation West Osborn Complex Phoenix, AZ	DRILLING METHOD: Conventional Mud; 6.5" open-faced two cone bit and 6.5" open-faced tricone	BORING NO. MW-7 L
	SAMPLING METHOD: 1) Drill Cuttings 2) Drive Samples	SHEET 3 OF 11
	WATER LEVEL / TIME / DATE / CASING DEPTH	DRILLING START: TIME 1315, DATE 7/17/96 DRILLING FINISH: TIME 1445, DATE 7/29/96
DATUM: APPROXIMATE ELEVATION:		

DRILLING RIG: Gardner-Denver 1500

SURFACE CONDITIONS:

ANGLE: vertical HAMMER WEIGHT: -

SAMPLE HAMMER TORQUE: - FT.-LBS

DRILLING CONTRACTOR Stewart Bros. Drilling Co. Milan, NM

DEPTH IN FEET	Soil Graph	Inches Driven / Inches Recovered	Sample No / Sample Depth	Time to Drive Sample	FID(ppm)	SAMPLE NUMBER AND DESCRIPTION OF MATERIAL
150	CL	24 / 24	- / 150	3'23"	NA	150'-155': SILTY CLAY (CL): same as 135'-150', with 10-20% fine-grained sand
155	CL					155'-210': SILTY CLAY (CL) and CALICHE: medium brown, soft, no odor; 20-30% medium to coarse-grained angular sands; caliche
160						sands resemble weathered rock
165						
170	CL					
175		8 / 8	- / 175	4'30"	NA	[Drive Sample: 175': SILTY CLAY and SANDY CALICHE discernable in drive sample, but during conventional drilling the
180						cuttings are a mixture of SILTY CLAY]
185						
190						
195						
200		18 / 13	- / 200	3'30"	NA	
205						
210						210'-225': SILTY CLAY (CL): medium brown, soft, no odor; minor sand
215	CL					
220						

LOGGED BY Richard J. Johnson, III CHECKED BY

DATE 7/17/96

SOIL BOREHOLE LOG

SITE NAME AND LOCATION	DRILLING METHOD	BORING NO
808708313 United Industrial Corporation West Osborn Complex Phoenix, AZ	Conventional Mud; 6.5" open-faced two cone bit and 6.5" open-faced tricone	MW-7 L
	SAMPLING METHOD: 1) Drill Cuttings 2) Drive Samples	SHEET 4 OF 11
	WATER LEVEL / TIME / DATE / CASING DEPTH	DRILLING START: TIME 1315, DATE 7/17/96 DRILLING FINISH: TIME 1445, DATE 7/29/96
DATUM: APPROXIMATE ELEVATION:		

DRILLING CONTRACTOR Stewart Bros. Drilling Co. Milan, NM

DRILLING RIG: Gardner-Denver 1500

SURFACE CONDITIONS:

ANGLE: vertical HAMMER WEIGHT: -

SAMPLE HAMMER TORQUE: - FT.-LBS

DEPTH IN FEET	Soil Graph	Inches Driven / Inches Recovered	Sample No / Sample Depth	Time to Drive Sample	FID(ppm)	SAMPLE NUMBER AND DESCRIPTION OF MATERIAL
225	CL / GC	10 / 6	- / 225	3'00"	NA	225'-230'?: CLAYEY SANDY GRAVEL: (GC): medium brown, soft, no odor; 30-40% subrounded to subangular gravel to 3/4"; 30-40%
230						fine to coarse-grained sand: 20-30% clay
235						230'-240': Driller missed sample 230?'-250': SILTY CLAY (CL): same as 210'-225'
240	CL					
245						Mud Viscosity=45 seconds 250': new bit 6 1/2" tricone
250		10 / 5	- / 250	5'00"	NA	[Drive Sample: 250'-251': SAND (SP): gray-brown, loose, no odor; fine-grained sand]
255	CL					250'-260': GRAVELLY CLAY (CL): medium brown, soft, no odor; 20-30% medium-grained sand to subangular gravel to 1/2"
260						260'-270': SAND (SW): multi-colored, loose, no odor; fine to coarse-grained sand, 10-20% clay
265	SW					
270						270'-280': SANDY GRAVEL (GW): multi-colored, loose, no odor; medium-grained sand to angular gravel to 1/2"; 20-30% clay
275	GW	18 / 9	- / 275	3'45"	NA	[Drive Sample: SAND (SP): fine-grained sand]
280						280'-294': SANDY GRAVEL (GW): multi-colored, loose, no odor; 50-60% angular to subangular gravels to 3/4"; 40-50% medium to
285	GW					coarse-grained sand
290						
295	CL					294'-310': SILTY CLAY (CL): medium brown, soft, no odor; minor sand

LOGGED BY Richard J. Johnson, III CHECKED BY

DATE 7/17/96

SOIL BOREHOLE LOG

TE NAME AND LOCATION	DRILLING METHOD:	BORING NO.	
808708313 United Industrial Corporation West Osborn Complex Phoenix, AZ	Conventional Mud; 6.5" open-faced two cone bit and 6.5" open-faced tricone	MW-7 L	
	SAMPLING METHOD:	SHEET 5 OF 11	
	1) Drill Cuttings	DRILLING	
	2) Drive Samples	START	FINISH
	WATER LEVEL	TIME 1315	TIME 1445
	TIME		
	DATE	DATE 7/17/96	DATE 7/29/96
DATUM: APPROXIMATE ELEVATION:	CASING DEPTH		

DRILLING RIG: Gardner-Denver 1500

ANGLE: vertical HAMMER WEIGHT: -

SAMPLE HAMMER TORQUE: - FT.-LBS

SURFACE CONDITIONS:

DRILLING CONTRACTOR Stewart Bros. Drilling Co. Milan, NM

DEPTH IN FEET	Soil Graph	Inches Driven / Inches Recovered	Sample No / Sample Depth	Time to Drive Sample	FID(ppm)	SAMPLE NUMBER AND DESCRIPTION OF MATERIAL
300	CL	15 / 24	- / 300	5'5"	NA	Mud Viscosity=31 seconds, Weight=8.8 ppg
305						[Drive Sample: 300'-301.5': SAND (SP), SANDY CLAY. and CLAY (at shoe end)]
310						310'-320': SANDY CLAY (CL): medium brown, soft, no odor; 70-80% silty clay; 20-30% medium to coarse-grained sand
315	CL					
320						320'-350': SILTY CLAY (CL): medium brown, stiff, no odor
325		20 / 24	- / 325	4'15"	NA	
330	CL					
335						
340						
345						
350		8 / 8	- / 350	5'5"	NA	350'-400': SILTY CLAY (CL): medium brown, soft, no odor; 20-30% medium to coarse-grained sand and caliche fragments
355	CL					
360						
365						
370						

LOGGED BY Richard J. Johnson, III CHECKED BY

DATE 7/17/96

SOIL BOREHOLE LOG

E NAME AND LOCATION	DRILLING METHOD:	BORING NO	
	Conventional Mud: 6.5" open-faced two cone	MW-7 L	
808708313	bit and 6.5" open-faced tricone	SHEET	
United Industrial Corporation	SAMPLING METHOD:	6 OF 11	
West Osborn Complex	1) Drill Cuttings	DRILLING	
Phoenix, AZ	2) Drive Samples	START	FINISH
	WATER LEVEL / TIME	TIME 1315	TIME 1445
	DATE / CASING DEPTH	DATE 7/17/96	DATE 7/29/96
DATUM: APPROXIMATE ELEVATION:			

DRILLING RIG: Gardner-Denver 1500

SURFACE CONDITIONS:

ANGLE: vertical HAMMER WEIGHT: -

SAMPLE HAMMER TORQUE: - FT.-LBS

DEPTH IN FEET	Soil Graph	Inches Driven / Inches Recovered	Sample No / Sample Depth	Time to Drive Sample	FID(ppm)	SAMPLE NUMBER AND DESCRIPTION OF MATERIAL
375	CL	18 / 18	- / 375	1'30"	NA	[Drive Sample: 375'-376': SANDY CLAY (CL): medium brown, stiff, no odor; 376'-376.5': SAND (SP): fine-grained sand lens]
380						
385						
390						[390'-400': 20-30% fine to coarse-grained sand in silty clay matrix]
395						
400		14 / 18	- / 400	4'30"	NA	400'-420': SANDY CLAY (CL): medium brown, soft, no odor; 30-40% fine-grained sand
405						
410	CL					[410'-420': light brown, probably from sandy caliche]
415						
420						420'-475': SILTY CLAY (CL): medium brown, soft, no odor; 10-30% very fine-grained sand; caliche fragments
425		13 / 13	- / 425	5'00"	NA	[Drive Sample: 425'-426.5': SANDY CLAY (CL): medium brown, medium stiff; 50-60% silty clay; 40-50% very fine-grained sand]
430	CL					
35						
440						
445						

DRILLING CONTRACTOR Stewart Bros. Drilling Co. Milan, NM

LOGGED BY Richard J. Johnson, III

DATE 7/17/96

CHECKED BY

SOIL BOREHOLE LOG

SITE NAME AND LOCATION	DRILLING METHOD:	BORING NO.
808708313 United Industrial Corporation West Osborn Complex Phoenix, AZ	Conventional Mud; 6.5" open-faced two cone bit and 6.5" open-faced tricone	MW-7 L
	SAMPLING METHOD:	SHEET 7 OF 11
	1) Drill Cuttings	DRILLING
	2) Drive Samples	START / FINISH
	WATER LEVEL	TIME / TIME
	TIME	1315 / 1445
	DATE	DATE / DATE
DATUM: APPROXIMATE ELEVATION:	CASING DEPTH	7/17/96 / 7/29/96

DRILLING RIG: Gardner-Denver 1500

ANGLE: vertical HAMMER WEIGHT: -

SAMPLE HAMMER TORQUE: - FT.-LBS

SURFACE CONDITIONS:

DRILLING CONTRACTOR Stewart Bros. Drilling Co. Milan, NM

DEPTH IN FEET	Soil Graph	Inches Driven / Inches Recovered	Sample No / Sample Depth	Time to Drive Sample	FID(ppm)	SAMPLE NUMBER AND DESCRIPTION OF MATERIAL
450		13 / 13	- / 450	4'05"	NA	[Drive Sample: 450'-451': SILTY CLAY (CL): same as above at 420'-475']
455						
460	CL					
465						
470						
475		9 / 8	- / 475	4'32"	NA	475'-495': SILTY CLAY (CL): medium brown, soft, no odor; minor fine-grained sand
480						
485	CL					
490						
495						495'-500': SANDY CLAY (CL): medium brown, soft, no odor; 30-40% medium-grained sand to gravel-sized fragments of siltstone to 1/2"
500	CL	8 / 24	- / 500	4'36"	NA	500'-600': SILTY CLAY (CL): medium brown, soft, no odor; minor fine grained sand
505						
510	CL					
515						
520						

LOGGED BY Richard J. Johnson, III

DATE 7/17/96

CHECKED BY

SOIL BOREHOLE LOG

TE NAME AND LOCATION 808708313 United Industrial Corporation West Osborn Complex Phoenix, AZ	DRILLING METHOD: Conventional Mud; 6.5" open-faced two cone bit and 6.5" open-faced tricone	BORING NO. MW-7 L
	SAMPLING METHOD: 1) Drill Cuttings 2) Drive Samples	SHEET 8 OF 11
	WATER LEVEL / TIME / DATE / CASING DEPTH	DRILLING START: TIME 1315, DATE 7/17/96 FINISH: TIME 1445, DATE 7/29/96
DATUM: APPROXIMATE ELEVATION:		

DRILLING RIG: Gardner-Denver 1500

SURFACE CONDITIONS:

ANGLE: vertical HAMMER WEIGHT: -

SAMPLE HAMMER TORQUE: - FT.-LBS

DEPTH IN FEET	Soil Graph	Inches Driven / Inches Recovered	Sample No / Sample Depth	Time to Drive Sample	FID(ppm)	SAMPLE NUMBER AND DESCRIPTION OF MATERIAL
525	CL	24 / 24	- / 525	3'7"	NA	[Drive Sample: 525'-527': SILTY CLAY (CL): same as above at 500'-600']
530						
535						
540						
545						
550		21 / 24	- / 550	1'40"	NA	[Drive Sample: 550'-552': SILTY CLAY (CL): same as above at 500'-600']
555						
560						
565						
570						
575		18 / 24	- / 575	1'12"	NA	[Drive Sample: 575'-577': SILTY CLAY (CL): same as above at 500'-600']
580						
585						
590						
595						

DRILLING CONTRACTOR Stewart Bros. Drilling Co. Milan, NM

LOGGED BY Richard J. Johnson, III CHECKED BY

DATE 7/17/96

SOIL BOREHOLE LOG

TE NAME AND LOCATION	DRILLING METHOD:	BORING NO.	
	Conventional Mud; 6.5' open-faced two cone	MW-7 L	
808708313	bit and 6.5" open-faced tricone	SHEET	
United Industrial Corporation	SAMPLING METHOD:	9 OF 11	
West Osborn Complex	1) Drill Cuttings	DRILLING	
Phoenix, AZ	2) Drive Samples	START	FINISH
	WATER LEVEL	TIME 1315	TIME 1445
	TIME		
	DATE	DATE 7/17/96	DATE 7/29/96
DATUM: APPROXIMATE ELEVATION:	CASING DEPTH		

DRILLING RIG: Gardner-Denver 1500 | SURFACE CONDITIONS:

ANGLE: vertical HAMMER WEIGHT: -

SAMPLE HAMMER TORQUE: - FT.-LBS

DEPTH IN FEET	Soil Graph	Inches Driven / Inches Recovered	Sample No / Sample Depth	Tiem to Drive Sample	FID(ppm)	SAMPLE NUMBER AND DESCRIPTION OF MATERIAL
600	CL					[Drive Sample: 600'-602': CLAY (CL): dark brown, very stiff, no odor; minor fine-grained sand]
605	CL					602'-625': CLAY (CL): reddish to dark brown, soft, no odor; 10-20% silt: minor fine-grained sand: fragments of stiff. moist clay within soft clay matrix
610	CL					
615	CL					
620	CL					
625	CL	18 / 24	- / 625	1'45"	NA	[Drive Sample: 625'-627': SILTY CLAY (CL): dark brown, stiff, no odor; minor fine-grained sand]
630	CL					625'-675': SILTY CLAY (CL): dark brown, soft, no odor; minor fine-grained sand
635	CL					
640	CL					
645	CL					
650	CL	16 / 24	- / 650	3'35"	NA	[Drive Sample: 650'-652': SILTY CLAY (CL): dark brown, stiff, no odor; 20-30% very fine-grained sand]
655	CL					
660	CL					
665	CL					
670	CL					

DRILLING CONTRACTOR Stewart Bros. Drilling Co. Milan, NM

LOGGED BY Richard J. Johnson, III CHECKED BY

DATE 7/17/96

SOIL BOREHOLE LOG

SITE NAME AND LOCATION	DRILLING METHOD:	BORING NO.	
808708313 United Industrial Corporation West Osborn Complex Phoenix, AZ	Conventional Mud; 6.5" open-faced two cone bit and 6.5" open-faced tricone	MW-7 L	
	SAMPLING METHOD:	SHEET 10 OF 11	
	1) Drill Cuttings 2) Drive Samples	DRILLING	
		START	FINISH
	WATER LEVEL / TIME / DATE / CASING DEPTH	TIME 1315 DATE 7/17/96	TIME 1445 DATE 7/29/96
DATUM: APPROXIMATE ELEVATION:			

DRILLING CONTRACTOR Stewart Bros. Drilling Co. Milan, NM

DRILLING RIG: Gardner-Denver 1500

SURFACE CONDITIONS:

ANGLE: vertical HAMMER WEIGHT: -

SAMPLE HAMMER TORQUE: - FT.-LBS

DEPTH IN FEET	Soil Graph	Inches Driven / Inches Recovered	Sample No / Sample Depth	Time to Drive Sample	FID(ppm)	SAMPLE NUMBER AND DESCRIPTION OF MATERIAL
675	CL	18 / 24	- / 675	1'18"	NA	[Drive Sample: 675'-677': see below at 675'-755']
680						675'-755': CLAYEY SILT (ML): dark brwon, medium stiff, no odor; 20-30% very fine-grained sand
685						
690						
695	ML					
700		18 / 24	- / 700	48"	NA	[Drive Sample: 700'-702': same as above at 675'-755']
705						
710						
715						
720						
725		6 / 4	- / 725	3'58"	NA	[Drive Sample: 725'-725.5': same as above at 675'-755']
730						
735						Mud Viscosity=40 seconds, Weight=9.2 ppg; diluted and mixed mud
740						
745						

LOGGED BY Richard J. Johnson, III CHECKED BY

DATE 7/17/96

SOIL BOREHOLE LOG

SITE NAME AND LOCATION	DRILLING METHOD:	BORING NO.
808708313 United Industrial Corporation West Osborn Complex Phoenix, AZ	Conventional Mud; 6.5" open-faced two cone bit and 6.5" open-faced tricone	MW-7 L
	SAMPLING METHOD:	SHEET 11 OF 11
	1) Drill Cuttings 2) Drive Samples	DRILLING START / FINISH

WATER LEVEL					TIME	TIME
TIME					1315	1445
DATE					DATE	DATE
CASING DEPTH					7/17/96	7/29/96

DATUM: APPROXIMATE ELEVATION:

DRILLING RIG: Gardner-Denver 1500

ANGLE: vertical HAMMER WEIGHT: -

SAMPLE HAMMER TORQUE: - FT.-LBS

SURFACE CONDITIONS:

DRILLING CONTRACTOR Stewart Bros. Drilling Co. Milan, NM

DEPTH IN FEET	Soil Graph	Inches Driven / Inches Recovered	Sample No / Sample Depth	Time to Drive Sample	FID(ppm)	SAMPLE NUMBER AND DESCRIPTION OF MATERIAL
750	ML	9 / 12	- / 750	3'50"	NA	[Drive Sample: 750'-751': CLAYEY SILT (ML): same as above at 675'-755']
755	ML					755': Drilling rate increased 755'-775': CLAYEY SILT (ML): dark brown, soft, no odor; 40-50%
760	ML					medium to coarse-grained sand within silt matrix; sand probably interbedded
765	ML					
770	ML					
775	ML	16 / 11	- / 775	1'55"	NA	[Drive Sample: 775'-776': CLAYEY SILT (ML): medium brown, medium stiff, no odor; 20-30% fine-grained sand; minor
780	CL					coarse-grained sand]
785	CL					776'-800': SILTY CLAY (CL): brown, stiff, no odor; <10% fine to coarse-grained angular sand, 10-40% silt
790	CL					
795	CL					
800	CL	NS				800'-820': No sample. Driller miscounted rods and thought he was drilling fill
805	ML					
810	ML					
815	ML	NA / NA	- / 820		NA	[Drive Sample: 820': CLAYEY SANDY SILT (ML): light brown, medium stiff, no odor; <10% fine to coarse-grained angular sand,
820	ML					20-30% clay] TD=820'

LOGGED BY Richard J. Johnson, III CHECKED BY

DATE 7/17/96

ELECTRIC LOGS FOR MW-7L

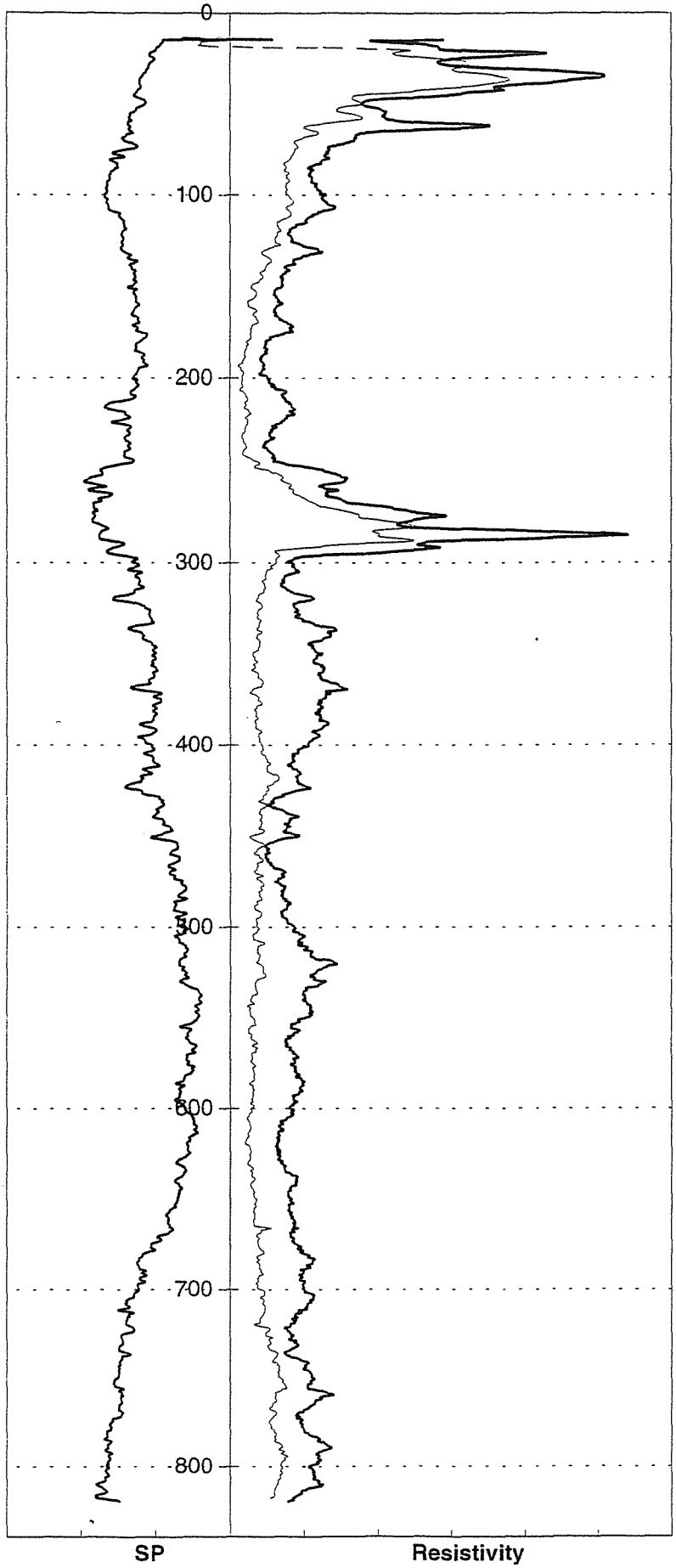

HSI GEOTRANS

NATURAL GAMMA AND NEUTRON LOG FOR MW-7L

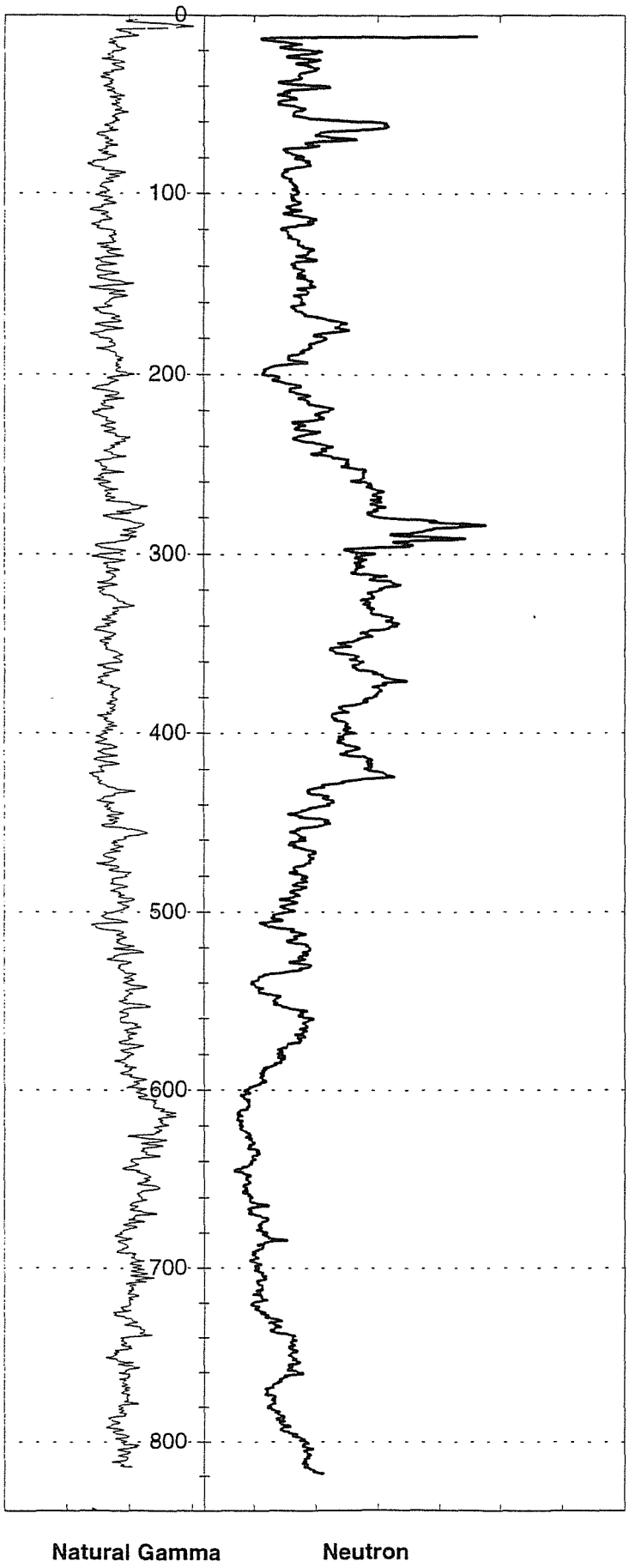

HSI GEOTRANS

MONITOR WELL CONSTRUCTION SUMMARY

Well No. MW-7L

Boring No. X-Ref:

Map Coords: 4876 N. 3674 E

Elevation Ground Level:

Job Number: 808708313

Top of Casing: 1105.39

Drilling Summary:		Construction Time Log: **Start** 7/17/96 **Finish** 8/21/96				
Total Depth	820 feet		Date	Time	Date	Time
Borehole Diameter	7 ⅞ inches	Drilling (6 1/2")	7/17/96	1315	7/29/96	1200
Casing Stick-Up	0	(12 1/4")	7/30/96	1115	7/31/96	1045
Driller	Stewart Brothers Drilling Co.	(7 ⅞")	8/2/96	0730	8/2/96	1400
1700Rig	Gardner Denver 1500					
Bit(s)	0-820 feet: 6 1/2" tricone 0-312 feet: 12 1/4" tricone 312-820 feet: 7 ⅞" tricone	Geophys. Logging	7/29/96	1445	7/29/96	1710
Drilling Fluid	Bentonite mud and polymers	Casing: 8 ⅝"	7/31/96	1200	8/1/966	1320
Protective Casing	None	Casing: 4 ½"	8/5/96	1525	8/5/96	2040
Comments: surface casing cemented from 1' to 313' bgs; 730'-735': neat cement						
plug with 3% calcium						
		Sand Pack:	8/6/96	0900	8/6/96	1555
		Cementing:	8/7/96	1500	8/7/96	1710
		Development:	8/20/96	1043	8/21/96	1520

Site Name: West Osborn Complex

Location: Issac's Pueblo del Sol Middle School 3449 N. 39th Avenue

Well Design & Specifications

Basis: Geologic Log x Geophysical Log x

Casing String(s): C = Casing S = Screen

Well Development: Drilling fluid thinned in borehole during well construction; bailed 200 gallons of water and drilling mud; swabbed into well screen; airlifted 3100 gallons of water from 310' bgs

Depth (ft)	String (C1, S1, etc.)	Elevation (ft)
0 to 313	C1- 8" LCS	
0 to 754.2	C2- 4.5" LCS	
754.2-795	S1 - 4.5" stainless steel	

Casing:	C1	8 5/8" Low carbon steel blank casing 0.188 wall
	C2	4.5" Low carbon steel blank casing 0.188 wall
Screen:	S1	4.5 " Stainless steel, 0.040" slot wire wrap
	S2	
Filter Pack:		740'-805': 8-12 Colorado silica sand.
Grout Seal:		1-735': neat cement with 3.5% bentonite; 1'-313': neat
		cement on outside of 8⅝" surface casing
Seal:		735'-740' #60 Colorado silica sand

Stabilization Test Data:

Time	pH	Spec. Cond. μs/m	Temp (C)
1501	8.18	740	----
1512	8.27	810	36
1520	8.19	810	37
Pumped			

Supervised By: David Broermann

Date:

STATE OF ARIZONA
DEPARTMENT OF WATER RESOURCES
GROUNDWATER MANAGEMENT SUPPORT SECTION
MAIL TO: P.O. BOX 458, PHOENIX, ARIZONA 85001-0458
500 NORTH THIRD STREET, PHOENIX, ARIZONA 85004-3903
PHONE (602) 417-2470 FAX (602) 417-2422

RECEIVED JUN 28 1996 GROUNDWATER MGT

NOTICE OF INTENTION TO DRILL MONITOR/PIEZOMETER WELL

PLEASE READ GENERAL INSTRUCTIONS ON REVERSE SIDE OF THIS FORM BEFORE COMPLETING.

Section §45-596, Arizona Revised Statues provide: Prior to drilling a monitor or piezometer well, a Notice of Intention to Drill shall be filed with the Department.

1 Well/Land Location:

2N (Township) 2E (Range) 27 (Section)

NW ¼ (10 Acre) SW ¼ (40 Acre) NE ¼ (160 Acre)

2. Position location of the well on the land:

Latitude 33 o 29 ' 33 "

Longitude 112 o 08 ' 34 "

3. County: Maricopa

4. Owner of the land of wellsite:

Isaac School District Number 5
Name
3348 West McDowell Road
Address
Phoenix (City) Az. (Sate) 85009 (Zip)

Telephone Number 484-4700

5. Lessee of the land of wellsite:

NA
Name

Address

City Sate Zip

Telephone Number

6. Owner of well:

United Industrial Corporation
Name
4636 East University
Address
Phoenix (City) Az (State) 85034 (Zip)

Phone Number (602) 894-2800

7. Consulting firm:

Hydro-Search, Inc.
Name
David Broermann
Contact Person
(602) 894-2800
Phone Number

8. Purpose of well drilled pursuant to this notice:

Monitor XXXXXX
Piezometer

9. If for deepening or modifying, list well registration number:

55-

FOR DEPARTMENT USE ONLY

File No. A(2-2)27ACB
Filed 6-28-96 By KB
Input By

DUPLICATE
Mailed 7-9-96 By KB
Registration 55- 558666
AMA/INA PHX
W/S 07 S/B 04

10. Will this proposed well be associated with a permit: Yes____ No XX
If yes, Permit No.

11. Construction will start:

July (Month) 15 (Day) 1996 (Year)

12. Period well will remain in use:

10 ~~Month~~/Years

13. For monitoring wells, is pump equipment to be installed?

Yes XXXX No

(a) If yes, design pump capacity:

10 - 15 GPM

(b) What use will be made of the water:

Sampled and disposed

14. Drilling Firm:

Stewart Brothers Drilling Co.
Name

P.O. Box 2067
Address

Milans (City) NM (State) 87021 (Zip)

1-505-287-2986
Telephone Number

314
DWR License Number

A-4
ROC License Category

15. Proposed method of abandonment of well after project is completed: In accordance with A.A.C. R12-15-811, pursuant to R12-15-816

16. Is this well to monitor existing contamination? _____ **Potential contamination** XX **.Please explain:** Monitor wells will monitor potential-existing contamination previously identified in other monitor wells.

I state that this Notice is filed in compliance with Rule A.A.C. R12-15-809 and R12-15-816(F), and is complete and correct to the best of my knowledge and belief and that I understand the limitations and conditions set forth on the reverse side of this form.

ARTHUR ORTIZ, JR. — Typed or Printed Name

Signature [X] Land Owner [ ] Lessee of Wellsite

6/26/96 — Date

17. **If construction plans have been coordinated with Arizona Department of Environmental Quality, who is the agency contact?** Ms. AnaVargus

If construction plans have been coordinated with Arizona Department of Water Resources, who is the agency contact? None

18. **WELL CONSTRUCTION PLAN:**

a) Drilling method (mud rotary, hollow-stem auger, etc.) Mud Rotary

b) Borehole diameters: 12 inches from 0 feet to 250 feet.
7 7/8 inches from 250 feet to 800 feet.

c) Casing materials (PVC, steel, hollow-stem auger, etc.)

material Schedule 40 low carbon steel diameter 8 inches from 0 feet to 250 feet.
material Schedule 40 low carbon steel diameter 4 inches from 0 feet to 760 feet.

d) Method of sealing at reductions grout seal

e) Annular seal materials (cement, grout, etc.); method of placement (tremied, circulated):

material cement grout method tremied from 0 feet to 748 feet.
material bentonite method tremied from 748 feet to 753 feet.

f) Filter packs (state material):
material silica sand from 753 feet to 800 feet.
material _____ from _____ feet to _____ feet.

g) Perforation or screen specification:

type 4-Inch, type 304 stainless steel from 760 feet to 800 feet.
type _____ from _____ feet to _____ feet.

h) Method of well development (bail, air lift, surge) Air-lift, jet, surge and pump

i) Will surface or conductor casing extend above grade? Yes _____ No XXXX

19. **Include detailed construction diagram showing expected water depth in feet below land surface, and details of vault, if specified.**

GENERAL INSTRUCTION

1. **Please submit two original notices, with original signatures, and check or money order (no cash) in the amount of $ 10.00, to P.O. Box 458, Phoenix, Arizona 85001-0458 or hand deliver to 500 North Third Street, Phoenix, Arizona 85004-3903.**

CONDITIONS

1. **If an individual other than the land owner or lessee, signs this notice, an original letter of authorization from the land owner/lessee, stating that the individual has permission to sign this specific Notice on their behalf, shall accompany the Notice of Intention to Drill a Monitor/Piezometer Well form.**

2. **Construction and abandonment standards for all wells shall be in accordance with A.A.C. R12-15-811 and R12-15-816.**

3. **Drilling of the well shall be completed within one year after the date of Notice.**

4. **A Well Driller Report is required within thirty days of completion of drilling. A Completion Report is required to be filed with the Department within thirty days after installation of pump equipment for monitor wells.**

5. **Pump equipment may not be installed on a well drilled for piezometer purposes. If a monitor will is pumped, pumping is limited to the maximum amount required for monitor purposes, but in no case may exceed 35 gallons per minute and an annual volume of 10 acre feet total.**

6. **A.A.C. Rule R12-15-811.H.2, requires that: "A monitor well shall be identified as such on the vault cover or at the top of the steel casing. Identification information will include well registration number."**

Special construction standards, required pursuant to A.A.C. Rule R12-15-821: _____