APPENDIX B

RID-92 Wellhead Treatment System Drawings

ROOSEVELT IRRIGATION DISTRICT
SITE #92 WATER TREATMENT INSTALLATION

LOCATED IN
A PORTION OF SECTION 10, T.1.N., R.2.E.
OF THE G. & S.R.M., MARICOPA COUNTY, ARIZONA

ENGINEERS NOTES

1. MARICOPA ASSOCIATION OF GOVERNMENTS (M.A.G.) UNIFORM STANDARD SPECIFICATIONS AND DETAILS FOR PUBLIC WORKS CONSTRUCTION (LATEST EDITION INCLUDING LATEST REVISION AND CURRENT SUPPLEMENTALS THEREOF PER THE LOCAL TOWN OR CITY) ARE INCORPORATED INTO THIS PLAN IN THEIR ENTIRETY.
2. ALL WORK REQUIRED TO COMPLETE THE CONSTRUCTION COVERED BY THIS PLAN SHALL BE IN ACCORDANCE WITH THE M.A.G. STANDARD SPECIFICATIONS AND DETAILS AND CURRENT SUPPLEMENTS THEREOF PER THE LOCAL CITY OR TOWN UNLESS SPECIFIED OTHERWISE IN THESE PLANS OR ELSEWHERE IN THE CONTRACT DOCUMENTS. CONTRACTORS SHALL FAMILIARIZE THEMSELVES WITH ALL REQUIRED STANDARD SPECIFICATIONS, DETAILS AND SUPPLEMENTS PRIOR TO BIDDING THE WORK FOR THE CONSTRUCTION COVERED BY THIS PLAN.
3. THE CONTRACTOR IS RESPONSIBLE FOR ALL METHODS, SEQUENCING, AND SAFETY CONCERNS ASSOCIATED WITH THIS PROJECT DURING CONSTRUCTION, UNLESS SPECIFICALLY ADDRESSED OTHERWISE IN THIS PLAN OR ELSEWHERE IN THE CONTRACT.
4. THE CONTRACTOR IS TO COMPLY WITH ALL LOCAL, STATE, AND FEDERAL LAWS AND REGULATIONS APPLICABLE TO THE CONSTRUCTION COVERED BY THIS PLAN.
5. THE CONTRACTOR IS RESPONSIBLE FOR OBTAINING AND COMPLYING WITH ALL PERMITS REQUIRED TO COMPLETE ALL WORK COVERED BY THIS PLAN.
6. THE QUANTITIES AND SITE CONDITIONS DEPICTED IN THESE PLANS ARE FOR INFORMATIONAL PURPOSES ONLY AND ARE SUBJECT TO ERROR AND OMISSION. CONTRACTORS SHALL SATISFY THEMSELVES AS TO ACTUAL QUANTITIES AND SITE CONDITIONS PRIOR TO BIDDING THE WORK FOR THE CONSTRUCTION COVERED BY THIS PLAN.
7. A REASONABLE EFFORT HAS BEEN MADE TO SHOW THE LOCATIONS OF EXISTING UNDERGROUND FACILITIES AND UTILITIES IN THE CONSTRUCTION AREA. THE CONTRACTOR IS RESPONSIBLE FOR ANY DAMAGE TO UTILITIES AND/OR FACILITIES CAUSED DURING THEIR CONSTRUCTION OPERATIONS. THE CONTRACTOR SHALL CALL 48 HOURS IN ADVANCE FOR BLUE STAKE (1-800-STAKE-IT) PRIOR TO ANY EXCAVATION.
8. THE CONTRACTOR IS RESPONSIBLE FOR ALL COORDINATION OF CONSTRUCTION AFFECTING UTILITIES AND THE COORDINATION OF ANY NECESSARY UTILITY RELOCATION WORK.
9. ALL PAVING, GRADING, EXCAVATION, TRENCHING, PIPE BEDDING, CUT FILL AND BACKFILL SHALL COMPLY WITH THE RECOMMENDATIONS SET FORTH IN THE SOILS (GEOTECHNICAL) REPORT FOR THIS PROJECT IN ADDITION TO THE REFERENCED REQUIRED SPECIFICATIONS AND DETAILS. THE CONTRACTOR SHALL BE AWARE THAT CERTAIN UTILITIES REQUIRE PROPER ATTENTION AND CAREFUL PLANNING DURING SITE CONSTRUCTION. PLEASE NOTE THAT UTILITIES ON THESE PLANS MAY NOT EXHIBIT THE FULL PROTECTIVE COVER REQUIRED DURING THE SUBGRADE PREPARATION PHASE OF THE CONSTRUCTION. IN SUCH INSTANCES, THE CONTRACTOR SHALL PROVIDE ADDITIONAL PROTECTION (SUCH AS RAMPING) OR INCREASED PIPE STRENGTH TO PROVIDE THE NECESSARY PROTECTION REQUIRED TO PREVENT DAMAGE DURING THE CONSTRUCTION OF THIS PROJECT. THE CONTRACTOR SHALL HOLD THE ENGINEER HARMLESS IN ALL CASES FOR DAMAGES TO UTILITIES WHERE INADEQUATE PROTECTIVE MEASURES OCCUR.
10. THE CONTRACTOR IS TO VERIFY THE LOCATION AND THE ELEVATIONS OF ALL EXISTING UTILITIES AT POINTS OF TIE-IN PRIOR TO COMMENCING ANY NEW CONSTRUCTION. SHOULD ANY LOCATION OR ELEVATION DIFFER FROM THAT SHOWN ON THESE PLANS, THE CONTRACTOR SHALL CONTACT THE OWNER'S AGENT.
11. CONTRACTOR TO VERIFY AND COORDINATE ALL DIMENSIONS AND SITE LAYOUT WITH ARCHITECT'S FINAL SITE PLAN AND FINAL BUILDING DIMENSIONS BEFORE STARTING WORK. REPORT DISCREPANCIES TO OWNER'S AGENT.
12. COORDINATION BETWEEN ALL PARTIES IS ESSENTIAL PART OF CONTRACT.
13. CONTRACTOR IS RESPONSIBLE FOR PROJECT AND SITE CONDITIONS, AND TO WORK WITH WEATHER CONDITIONS AS THE PROJECT SITE MAY BE LOCATED IN A FLOOD PRONE AREA AND SUBJECT TO FLOODING AND ITS HAZARDS.
14. THE CONTRACTOR IS TO VERIFY THE LOCATION, ELEVATION, CONDITION, AND PAVEMENT CROSS-SLOPE OF ALL EXISTING SURFACES AT POINTS OF TIE-IN AND MATCHING, PRIOR TO COMMENCEMENT OF GRADING, PAVING, CURB AND GUTTER, OR OTHER SURFACE CONSTRUCTION. SHOULD EXISTING LOCATIONS, ELEVATIONS, CONDITION, OR PAVEMENT CROSS-SLOPE DIFFER FROM THAT SHOWN ON THESE PLANS, RESULTING IN THE DESIGN INTENT REFLECTED ON THESE PLANS NOT ABLE TO BE CONSTRUCTED, THE CONTRACTOR SHALL NOTIFY THE OWNER'S AGENT IMMEDIATELY FOR DIRECTION ON HOW TO PROCEED PRIOR TO COMMENCEMENT OF CONSTRUCTION. THE CONTRACTOR ACCEPTS RESPONSIBILITY FOR ALL COSTS ASSOCIATED WITH CORRECTIVE ACTION IF THESE PROCEDURES ARE NOT FOLLOWED.
15. CONTRACTOR IS RESPONSIBLE TO COORDINATE UTILITY CROSSINGS AT CULVERT CROSSINGS BEFORE STARTING WORK ON CULVERT. COORDINATE WITH OWNER REPRESENTATIVE. VERIFY UTILITY LINES AND/OR CONDUITS ARE IN PLACE BEFORE STARTING CULVERT WORK.
16. CONSTRUCT RETENTION BASIN AS SHOWN. CONTRACTOR TO SCARIFY BOTTOM OF BASIN TWO FEET DEEP AND NOT ALLOW COMPACTION OVER 80%.
17. THIS PROJECT REQUIRES A REGULAR ONGOING MAINTENANCE PROGRAM FOR THE DESIGNED DRAINAGE SYSTEM(S) TO PRESERVE THE DESIGN INTEGRITY AND THE ABILITY TO PERFORM ITS OPERATIONAL INTENT. FAILURE TO PROVIDE MAINTENANCE WILL JEOPARDIZE THE DRAINAGE SYSTEM(S)' PERFORMANCE AND MAY LEAD TO ITS INABILITY TO PERFORM PROPERLY AND/OR CAUSE DAMAGE ELSEWHERE IN THE PROJECT.
18. SEWER LINES DESIGNED IN PROFILE AND PUBLIC WATER LINES ARE REQUIRED TO BE ASBUILT AND THE INSTALLATION AND TESTING WITNESSED BY A PROFESSIONAL ENGINEER IN ACCORDANCE WITH ARIZONA ADMINISTRATIVE CODES R18-9-E301 "4.01 GENERAL PERMIT: SEWAGE COLLECTIONS SYSTEMS" AND R18-5-507 AND 508 "APPROVAL OF CONSTRUCTION" AND "RECORD DRAWINGS", RESPECTIVELY. IT IS THE CONTRACTOR'S RESPONSIBILITY TO NOTIFY OWNER 72 HOURS IN ADVANCE WHEN THOSE SYSTEMS ARE READY TO BE WITNESSED.
19. THE WORK PRODUCT PRESENTED IS BELIEVED TO BE COMPLIANT WITH THE INTENT OF THE CURRENT AMERICANS DISABILITIES ACT (ADA) REQUIREMENTS AS INTERPRETED BY THE REVIEWING AGENCY(S). IF CONSTRUCTION OF THE PROJECT IS DELAYED, THIS WORK PRODUCT SHOULD BE UPDATED TO ACCOUNT FOR ANY RELEVANT ADA UPDATES BEFORE CONSTRUCTION BEGINS.
20. LOWEST FLOOR (LF) REFERS TO EITHER FLOOR/SLAB ELEVATION OR TOP OF BASEMENT SLAB. LF ELEVATIONS ON THE GRADING AND DRAINAGE PLANS FOR RESIDENTIAL UNITS REFLECT SLAB ON GRADE CONDITIONS AND CANNOT BE LOWERED WITHOUT AGENCY APPROVAL IN LOCATIONS WHERE "SPECIAL FLOOD HAZARD AREAS" EXIST. IN NON-FLOOD HAZARD LOCATIONS, TO ENSURE THAT ADEQUATE RESIDENTIAL LOT DRAINAGE CAN BE ACHIEVED, A PROFESSIONAL ENGINEER SHOULD BE CONSULTED IF THE LF FOR THE SLAB IS PROPOSED TO BE LOWERED, OR IF A BASEMENT IS TO BE CONSTRUCTED.

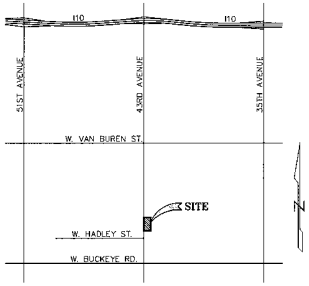

VICINITY MAP
N.T.S.

OWNER
ROOSEVELT IRRIGATION DISTRICT
103 W. BASELINE ROAD
BUCKEYE, AZ 85326
CONTACT: DONOVAN NEESE
PH: 623-386-2046

TREATMENT DESIGNER
SYNERGY ENVIRONMENTAL LLC
10645 N TATUM BLVD., SUITE 200-437
PHOENIX, AZ 85028
CONTACT: JOEL PETERSON
PH: 480-284-3518

MECHANICAL ENGINEER
TAYLOR RYMAR CORPORATION
60 E RIO SALADO PARKWAY, SUITE 1010
TEMPE, AZ 85281
CONTACT: CHRIS MARONEY
PH: 480-951-0517
FAX: 480-951-2353

STRUCTURAL ENGINEER
PK ASSOCIATES LLC
7434 E McDONALD DR
SCOTTSDALE, ARIZONA 85250
CONTACT: STEVE SLONAKER
PH: 480-922-8854
FX: 480-922-3739

CIVIL ENGINEER
WOOD, PATEL AND ASSOCIATES
2051 W NORTHERN AVE, SUITE 100
PHOENIX, ARIZONA 85029
CONTACT: DARRELL SMITH
PH: 602-335-8500
FX: 602-335-8580

LEGEND

EXISTING	DESCRIPTION	PROPOSED
⊙	SURVEY MARKER	
═══	CURB & GUTTER	
— — OHE — —	OVERHEAD ELECTRIC LINE	
x C 57.86	CONCRETE ELEVATION	x C=54.50
x NG 53.83	NATURAL GRADE	
x TC 53.76 G 53.43	TOP OF CURB GUTTER ELEVATION	TC=55.17 FG=54.5
x P 57.86	PAVEMENT ELEVATION	
U.P.	UTILITY POLE	
S.L.	STREET LITE	
C.B.	CATCH BASIN	
	SIGN	
B.P.	BACKFLOW PREVENTER	
M.H.	MANHOLE	

CALL TWO WORKING DAYS BEFORE YOU DIG
(602) 263-1100
1-800-STAKE-IT
(OUTSIDE MARICOPA COUNTY)

ROOSEVELT IRRIGATION DISTRICT
SITE #92 WATER TREATMENT INSTALLATION
PHOENIX, ARIZONA
GRADING AND DRAINAGE PLAN

REGISTERED PROFESSIONAL ENGINEER (CIVIL) DARRELL D. SMITH 33966 ARIZONA, U.S.A.
EXPIRES 06-30-13

WOOD/PATEL
CIVIL ENGINEERS
HYDROLOGISTS
LAND SURVEYORS
CONSTRUCTION MANAGERS
(602) 335-8500
PHOENIX • MESA • GOODYEAR • TUCSON

ENGINEER	D. SMITH
DESIGNER	D. MATTHEWS
CAD TECHNICIAN	P. BROUT
SCALE (HORIZONTAL)	N.T.S.
SCALE (VERTICAL)	N/A
DATE	12-08-11
JOB NUMBER	113762
SHEET	1 OF 2

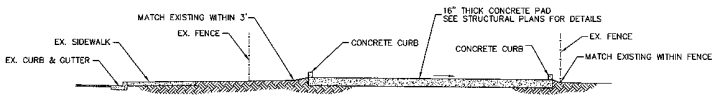

SECTION A–A
NTS

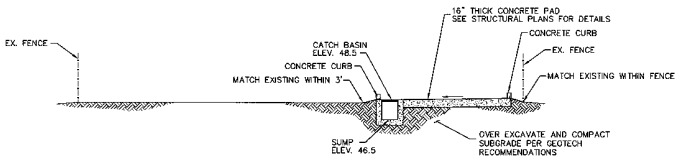

SECTION B–B
NTS

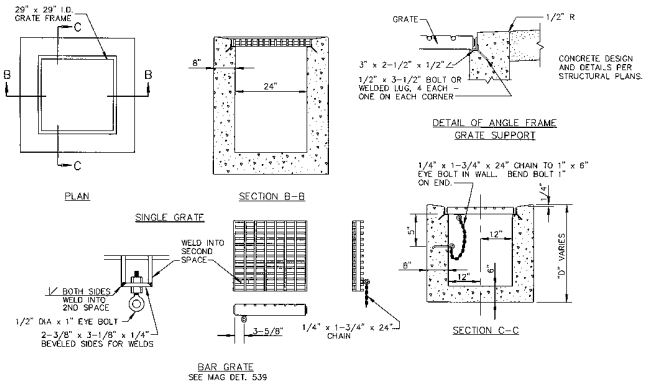

BAR GRATE
SEE MAG DET. 539

SUMP BASIN DETAIL
NTS

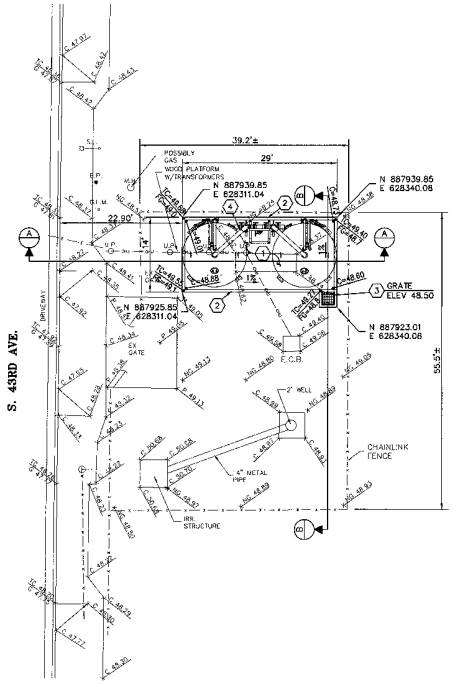

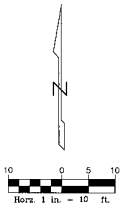

CONSTRUCTION NOTES

1. CONSTRUCT CONCRETE PAD OVER COMPACTED SUBGRADE, PER STRUCTURAL PLANS & SOIL REPORT RECOMMENDATION.
2. CONSTRUCT 8" CURB ON TOP OF SLAB PER STRUCTURAL PLANS.
3. CONSTRUCT GRATE FRAME AND GRATE PER DETAIL ON THIS SHEET. SEE STRUCTURAL PLAN FOR CONCRETE SUMP BASIN DETAIL.
4. PIPING PER TAYLOR RYMAR CORPORATION PLANS.

NOTE:
1. GEOTECH REPORT PREPARED BY ATEK ENGINEERING CONSULTANTS. GEOTECHNICAL EXPLORATION ROOSEVELT IRRIGATION DISTRICT WATER TREATMENT PLANT – 92, SOUTH 43RD AVENUE, NORTH OF WEST BUCKEYE ROAD PHOENIX, ARIZONA. DATED OCTOBER 26TH, 2011.

2. CONCRETE FINISHED ELEVATIONS ALLOW FOR SURFACE DRAINAGE TO THE SUMP INLET. CONTRACTOR TO INSTALL SKIDS AND LEVEL AS NECESSARY. SEE STRUCTURAL DETAILS FOR GRADE TOLERANCES.

ROOSEVELT IRRIGATION DISTRICT
SITE #92 WATER TREATMENT INSTALLATION
PHOENIX, ARIZONA
GRADING AND DRAINAGE PLAN

EXPIRES 06-30-13

WOOD/PATEL
CIVIL ENGINEERS
HYDROLOGISTS
LAND SURVEYORS
CONSTRUCTION MANAGERS
(602) 335-8500
PHOENIX • MESA • GOODYEAR • TUCSON

ENGINEER	D. SMITH
DESIGNER	D. MATTHEWS
CAD TECHNICIAN	P. JROUT
SCALE (HORIZONTAL)	1" = 10'
SCALE (VERTICAL)	N/A
DATE	12-08-11
JOB NUMBER	113762
SHEET	2 OF 2

CALL TWO WORKING DAYS BEFORE YOU DIG
(602) 263-1100
1-800-STAKE-IT
(OUTSIDE MARICOPA COUNTY)

PLAN KEYNOTES:

1. 16" THICK CONCRETE MAT WITH #5 AT 10" O.C. EACH WAY TOP AND BOTTOM.
2. 8" TALL CONCRETE CURB PER DETAIL 01.
3. SLOPE PAD 1% TOWARD SUMP PIT.
4. SUMP PIT PER DETAIL 02/S1.2.
5. 7'-6"x7'-6"x36" DEEP CONCRETE PAD FOOTING WITH 10 #7 EACH WAY TOP AND BOTTOM. BYPASS VALVE DESIGN BY OTHERS. FOR LOCATION OF VALVE SEE MECHANICAL DRAWINGS. (CONTRACTOR OPTION FOR DRILLED PIER. SEE DETAIL 07 FOR MORE INFORMATION)
6. SIEMENS TANK ASSEMBLY PER MECH'L (185 KIPS MAX. WEIGHT)

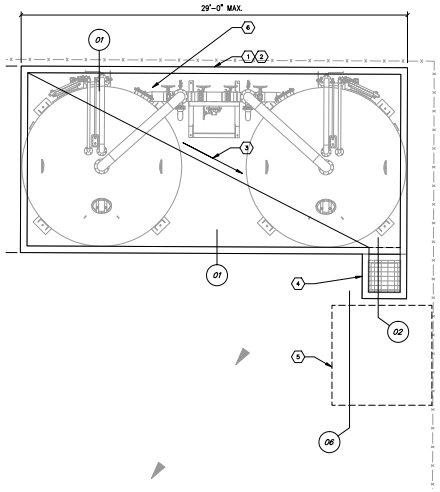

RID #92 WELL SITE
EQUIPMENT PAD

1/4" = 1'-0"

BUILDING CODE:

2006 EDITION OF THE INTERNATIONAL BUILDING CODE, WITH CITY OF PHOENIX AMENDMENTS.

LOADS:

SIEMENS HP 1220 ADSORPTION SYSTEM = 185,000 LBS. PER SKID (2 TANKS PER SKID, 2 TANKS TOTAL THIS SITE)

WIND:

90 MPH BASIC WIND SPEED, EXPOSURE C.
Iw = 1.0.
INTERNAL PRESSURE COEFFICIENT (GCpi) = 0.18.

SEISMIC:

OCCUPANCY CATEGORY = II.
Ie = 1.0.
DESIGN CATEGORY = B.
SITE CLASS D.
Ss = 0.174, S1 = 0.060.

FOUNDATIONS:

SOIL REPORT BY ATEK ENGINEERING CONSULTANTS; JOB NO.110059; DATED OCTOBER 26, 2011; MAT FOUNDATIONS SHALL BEAR ON 18" CONTROLLED COMPACTED FILL IN ACCORDANCE WITH THE ABOVE REPORT. BOTTOM OF FOOTING TO BE 12" MINIMUM BELOW FINISHED GRADE. THESE FOOTING DEPTHS ARE MINIMUMS AND THE CONTRACTOR SHALL COORDINATE WITH SOILS REPORT AND OTHERS TRADES TO ENSURE THESE MINIMUMS ARE SUFFICIENT FOR THE WORK. COMPACTED FILL SHALL EXTEND 5'-0" BEYOND EACH EDGE OF FOOTING. FINISHED GRADE IS DEFINED AS LOWEST ADJACENT GRADE WITHIN 5 FEET. DESIGN SOIL BEARING VALUE = 2000 PSF. FOUNDATION EXCAVATIONS SHALL BE INSPECTED BY SOILS ENGINEER PRIOR TO PLACEMENT OF CONCRETE.

CONCRETE:

MINIMUM 28 DAY STRENGTH 4,000 PSI (w/c = 0.45): (TYPE II, U.N.O.)
– 3,000 PSI MIN. BEFORE SETTING EQUIPMENT

MECHANICALLY VIBRATE ALL CONCRETE WHEN PLACED. MAXIMUM SLUMP 4 1/2" FOR CONCRETE WITHOUT PLASTICIZER. IF PLASTICIZER IS USED, A HIGHER FINAL SLUMP MAY BE ALLOWED UPON STRUCTURAL ENGINEER'S APPROVAL. CAST CLOSURE POUR AROUND COLUMNS AFTER COLUMN DEAD LOAD IS APPLIED.

REINFORCING:

ASTM A615 (Fy = 60 KSI) DEFORMED BARS FOR ALL BARS. ALL GRADE 60 REINFORCING TO BE WELDED SHALL BE ASTM A706. WELDED WIRE FABRIC PER ASTM A185, WIRE PER ASTM A82. NO TACK WELDING OF REINFORCING BARS ALLOWED WITHOUT PRIOR REVIEW OF PROCEDURE WITH THE STRUCTURAL ENGINEER. LATEST ACI CODE AND DETAILING MANUAL APPLY. CLEAR CONCRETE COVERAGES AS FOLLOWS:

CAST AGAINST AND PERMANENTLY EXPOSED TO EARTH ---------- 3"
EXPOSED TO EARTH OR WEATHER
#6 OR LARGER ---------- 2"
#5 AND SMALLER ---------- 1 1/2"
ALL OTHER PER LATEST EDITION OF ACI 318.

LAP SPLICES IN CONCRETE:

LAP SPLICES, UNLESS NOTED OTHERWISE, SHALL BE CLASS "B" TENSION LAP SPLICES PER LATEST EDITION OF ACI 318. STAGGER SPLICES A MINIMUM OF ONE LAP LENGTH.

ALL SPLICE LOCATIONS SUBJECT TO APPROVAL BY THE STRUCTURAL ENGINEER. PROVIDE BENT CORNER BARS TO MATCH AND LAP WITH HORIZONTAL BARS AT ALL CORNERS AND INTERSECTIONS PER TYPICAL DETAILS. REINFORCING BAR SPACING GIVEN ARE MAXIMUM ON CENTERS. ALL BARS PER CRSI SPECIFICATIONS AND HANDBOOK. DOWEL ALL VERTICAL REINFORCING TO FOUNDATION WITH STANDARD 90-DEGREE HOOKS UNLESS NOTED OTHERWISE. SECURELY TIE ALL BARS IN LOCATION BEFORE PLACING CONCRETE.

NOTES ON CRACKING OF CONCRETE STRUCTURES:

CRACKING IS INHERENT TO THE MATERIAL PROPERTIES OF CONCRETE CONSTRUCTION WHILE EVERY EFFORT HAS BEEN MADE TO MINIMIZE THE EFFECTS OF UNSIGHTLY CRACKING, THE PRESENCE OF CRACKS ARE NORMAL AND UNAVOIDABLE. THE DESIGN OF THE CONCRETE STRUCTURAL ITEMS HAVE BEEN ANALYZED USING A "CRACKING SECTION." THE PRESENCE OF THE CRACKING SHOULD NOT BE CONSIDERED DETRIMENTAL TO THE STRUCTURE. CRACKS LARGER THAN 5 MILS SHALL BE FILLED AND SEALED WITH AN APPROVED CRACK FILLER TO PREVENT FUTURE DETERIORATION. ALLOWANCE SHALL BE MADE IN THE CONSTRUCTION BUDGET FOR SEALING OF SUCH CRACKS. IN SOME CASE, CRACKS DO NOT APPEAR UNTIL WELL AFTER CONSTRUCTION HAS BEEN COMPLETED. IT IS THE RESPONSIBILTY OF THE OWNER TO MAINTAIN THE STRUCTURE PROPERLY OVER THE LIFE OF THE STRUCTURE. CONCRETE CRACKS, SHOULD THEY OCCUR, SHALL BE FILLED AND SEALED TO PREVENT PREMATURE DETERIORATION OF THE STRUCTURE.

SHOP DRAWINGS:

SHOP DRAWINGS SHALL BE SUBMITTED FOR ALL STRUCTURAL ITEMS IN ADDITION TO ITEMS REQUIRED BY MECHANICAL SPECIFICATIONS.

THE CONTRACTOR SHALL REVIEW ALL SHOP DRAWINGS PRIOR TO SUBMITTAL. ITEMS NOT IN ACCORDANCE WITH CONTRACT DOCUMENTS SHALL BE FLAGGED UPON HIS REVIEW.

VERIFY ALL DIMENSIONS WITH MECHANICAL AND ALL FINISHED GRADE WITH CIVIL DRAWINGS.

ANY CHANGES, SUBSTITUTIONS, OR DEVIATIONS FROM CONTRACT DOCUMENTS SHALL BE CLOUDED BY MANUFACTURER OR FABRICATOR. ANY OF THE AFOREMENTIONED WHICH ARE NOT CLOUDED OR FLAGGED BY SUBMITTING PARTIES, SHALL NOT BE CONSIDERED APPROVED AFTER ENGINEER'S REVIEW, UNLESS NOTED ACCORDINGLY.

THE ENGINEER HAS THE RIGHT TO APPROVE OR DISAPPROVE ANY CHANGES TO CONTRACT DOCUMENTS AT ANYTIME BEFORE OR AFTER SHOP DRAWING REVIEW.

THE SHOP DRAWINGS DO NOT REPLACE THE CONTRACT DOCUMENTS. ITEMS OMITTED OR SHOWN INCORRECTLY AND ARE NOT FLAGGED BY THE STRUCTURAL ENGINEER OR ARCHITECT ARE NOT TO BE CONSIDERED CHANGES TO CONTRACT DOCUMENTS. IT IS THE CONTRACTOR'S RESPONSIBILITY TO MAKE SURE ITEMS ARE CONSTRUCTED TO CONTRACT DOCUMENTS.

THE ADEQUACY OF ENGINEERING DESIGNS AND LAYOUT PERFORMED BY OTHERS RESTS WITH THE DESIGNING OR SUBMITTING AUTHORITY.

REVIEWING IS INTENDED ONLY AS AN AID TO THE CONTRACTOR IN OBTAINING CORRECT SHOP DRAWINGS. RESPONSIBILITY FOR CORRECTNESS SHALL REST WITH THE CONTRACTOR.

EPOXY ANCHORS IN CONCRETE:

INJECTABLE ADHESIVE SHALL BE USED FOR INSTALLATION OF REINFORCING STEEL DOWELS OR THREADED ANCHOR RODS AND INSERTS INTO NEW OR EXISTING CONCRETE OR SOLID GROUTED CONCRETE MASONRY UNITS ONLY WHERE SPECIFIED ON PLANS. IF USE IS REQUESTED FOR OTHER THAN WHERE NOTED CONTACT STRUCTURAL ENGINEER THROUGH ARCHITECT FOR APPROVAL. ADHESIVE SHALL BE FURNISHED IN SIDE BY SIDE PACKS WHICH KEEP COMPONENT A AND COMPONENT B SEPARATE. USE ONLY INJECTION TOOLS AND STATIC MIXING NOZZLES RECOMENDED BY MANUFACTURER. MANUFACTURERTS INSTRUCTIONS SHALL BE FOLLOWED.

ANCHORS USED MUST HAVE I.C.C. APPROVAL AND INCLUDE HILTI HY-150 FOR MASONRY (ESR-1967), HILTI HIT-RE 500-SD FOR CONCRETE (ESR-2322) AND SIMPSON STRONG TIE SET (ESR-1772) FOR MASONRY OR EQUIVALENT. THE USE OF ANY EPOXY ANCHOR MUST BE APPROVED BY THE ENGINEER OF RECORD.

GENERAL:

ENTIRE CONTRACT DOCUMENTS SHALL BE USED TO BUILD BUILDING. SOME CRITICAL ITEMS REQUIRED BY OTHER DISCIPLINES MAY NOT BE SHOWN ON STRUCTURAL DRAWING (i.e. MECHANICAL, PLUMBING LOADS, ANS SUPPORT PLATES ETC.)

ITEMS SHOWN BY OTHER DISCIPLINES WITH REFERENCE TO STRUCTURAL DRAWING BUT NOT SHOWN ON THESE STRUCTURAL DOCUMENT SHALL BE CONSIDERED DESIGN BUILD ITEMS. CONTRACTOR SHALL SUBMIT DESIGN BY OTHERS FOR REVIEW.

THE STRUCTURAL CONSTRUCTION DOCUMENTS REPRESENT THE FINISHED STRUCTURE. THEY DO NOT INDICATE THE METHOD OF CONSTRUCTION. THE CONTRACTOR SHALL PROVIDE ALL MEASURES NECESSARY TO PROTECT THE STRUCTURE DURING CONSTRUCTION. SUCH MEASURES SHALL INCLUDE, BUT NOT BE LIMITED TO, BRACING, SHORING FOR LOADS DUE TO CONSTRUCTION EQUIPMENT, ETC. THE STRUCTURAL ENGINEER SHALL NOT BE RESPONSIBLE FOR THE CONTRACTOR'S MEANS, METHODS, TECHNIQUES, SEQUENCES FOR PROCEDURE OF CONSTRUCTION, OR THE SAFETY PRECAUTIONS AND THE PROGRAMS INCIDENT THERETO (NOR SHALL OBSERVATION VISITS TO THE SITE INCLUDE INSPECTION OF THESE ITEMS).

WHERE REFERENCE IS MADE TO VARIOUS TEST STANDARDS FOR MATERIALS, SUCH STANDARDS SHALL BE THE LATEST EDITION AND/OR ADDENDA.

ESTABLISH AND VERIFY ALL OPENINGS AND INSERTS FOR MECHANICAL, PLUMBING AND ELECTRICAL WITH APPROPRIATE TRADES, DRAWINGS AND SUBCONTRACTORS PRIOR TO CONSTRUCTION.

OPTIONS ARE FOR CONTRACTOR'S CONVENIENCE. IF HE CHOOSES AN OPTION, CONTRACTOR SHALL BE RESPONSIBLE FOR ALL NECESSARY CHANGES AND SHALL COORDINATE ALL DETAILS.

NOTES AND DETAILS ON DRAWINGS SHALL TAKE PRECEDENCE OVER GENERAL STRUCTURAL NOTES AND TYPICAL DETAILS. WHERE NO DETAILS ARE SHOWN, CONSTRUCTION SHALL CONFORM TO SIMILAR WORK ON THE PROJECT.

ALL DIMENSIONS SHOWN (INCLUDING ELEVATIONS) ON STRUCTURAL DRAWINGS ARE TO ASSIST CONTRACTOR IN VERIFICATION. SCALING DIMENSIONS FROM DRAWINGS IS NOT PERMITTED. LOCATION OF ALL ITEMS SHALL BE DETERMINED BY DIMENSIONS OR NOTES ONLY; DO NOT USE GRAPHIC APPEARANCE TO ASSUME SPECIFIC LOCATIONS.

CONTRACTOR SHALL BE RESPONSIBLE FOR VERIFICATION OF ALL DIMENSIONS WITH MECHANICAL AND FINISHED GRADE WITH CIVIL DRAWINGS PRIOR TO START OF CONSTRUCTION. RESOLVE ANY DISCREPANCY WITH THE ARCHITECT.

TYPICAL DETAILS MAY NOT NECESSARILY BE CUT ON PLANS, BUT APPLY UNLESS NOTED OTHERWISE.

WHERE DISCREPANCIES OCCUR BETWEEN PLANS, DETAILS, GENERAL STRUCTURAL NOTES AND SPECIFICATIONS, THE GREATER REQUIREMENTS SHALL GOVERN.

ANY ENGINEERING DESIGN, PROVIDED BY OTHERS AND SUBMITTED FOR REVIEW, SHALL BEAR THE SEAL OF AN ENGINEER REGISTERED IN THE STATE OF JURISDICTION.

MISCELLANEOUS:

REFER TO MECHANICAL, ELECTRICAL, CIVIL, OR OTHER SPECIALTY ENGINEERING DRAWINGS FOR DIMENSIONS NOT SHOWN, INCLUDING BUT NOT LIMITED TO: SIZE AND LOCATION OF CURBS, EQUIPMENT HOUSEKEEPING PADS, BLOCKOUTS, FLOOR DEPRESSIONS, SUMPS, DRAINS, ANCHOR BOLTS, EMBEDDED ITEMS, ETC. CONTRACTOR SHALL VERIFY DIMENSIONS AND RESOLVE DISCREPANCIES OR CONFLICT PRIOR TO CONSTRUCTION. WHERE SECTIONS ARE INDICATED ON THE PLAN BY A NUMBER AND A DRAWING NUMBER THUS, 1/S5.01, THE INDICATED SECTION (1) IS SHOWN ON STRUCTURAL DRAWING S5.01.

FLOOR FLATNESS/LEVELNESS SHALL MEET MECHANICAL SPECIFICATIONS (1/8" MINIMUM LEVELNESS UNLESS TIGHTER REQUIREMENT IN SPECIFICATIONS) IN HEIGHT FOR ALL STRUCTURAL SYSTEMS. CONTRACTOR SHALL INCLUDE COST FOR LEVELING ALL MAT SLABS IF REQUIRED.

SPECIAL INSPECTION:

PER IBC CHAPTER 17, SPECIAL INSPECTION IS REQUIRED FOR THE FOLLOWING ITEMS:

CONCRETE: VERIFICATION AND INSPECTION	CONTINUOUS	PERIODIC	REFERRENCED STANDARD (NOTE 1)	IBC REFERENCE
1. Inspection of reinforcing steel.	–	X	ACI 318: 3.5, 7.1–7.7	1913.4
2. Inspect bolts to be installed in concrete prior to and during placement of concrete where allowable loads have been increased.	X	–	ACI 318: APPENDIX D	1912
3. Verifying use of required design mix.	–	X	ACI 318: Ch. 4, 5.2–5.4	1904.2.2, 1913.2, 1913.3
4. At the time fresh concrete is sampled to fabricate specimens for strength tests, perform slump and air content tests, and determine the temperature of the concrete.	X	–	ASTM C 172 ASTM C 31 ACI 318: 5.6, 5.8	1913.10
5. Inspection of concrete placement for proper application techniques.	X	–	ACI 318: 5.9, 5.10	1913.6, 1913.7, 1913.8
6. Inspection for maintenance of specified curing temperature and techniques.	–	X	ACI 318: 5.11, 5.13	1913.9
7. Inspect formwork for shape, location and dimensions of the concrete member being formed.	–	X	ACI 318: 6.1.1	

NOTES:
1. TABLES TAKEN DIRECTLY FROM IBC FOR REFERENCE.

PK ASSOCIATES, LLC
7434 E. McDowell Drive
Scottsdale, Arizona 85257
Phone:(480) 922-8854
Fax:(480) 922-7539
Email:cost@pkstructural.com
Website:www.pkstructural.com

This is a instrument of service only and is the property of Taylor Ryman Corporation. Taylor Ryman Corporation. No reproduction or other use shall be made by any person or firm other than Taylor Ryman Corporation, without the express written permission of Taylor Ryman Corporation. Any reproduction or use shall void the engineer's seal and signature hereon and no professional responsibility will result. Copyright 2008 Taylor Ryman Corporation.

TAYLOR RYMAR
CORPORATION
60 EAST RIO SALADO PARKWAY
SUITE 1100
TEMPE, AZ 85281
PH: 480.951.0517 FAX:480.351.2353
WWW.TR-CORP.COM

ROOSEVELT IRRIGATION DISTRICT #92
WATER TREATMENT INSTALLATION

43RD AVENUE, 1/4 MI. NORTH OF BUCKEYE, PHOENIX, ARIZONA

Sheet Title: GSN AND FOUNDATION PLAN

REVISIONS:

DATE:	12/15/2011
DRAWN BY:	FML
CHECKED BY:	RH
SCALE:	AS NOTED
PROJECT NO:	11322
SHEET	S1.1

Dec 15, 2011 – 5:26pm
F:\E_Drive_Cadd\2011 JOBS\Wood Patel\RID – Roosevelt Irrigation District\Site #92\ALL\S1-1.dwg

CONC. PSI	CLASS B TENSION SPLICE LENGTHS						COMP. BARS	
	f'c = 2,500 PSI/ f'c = 3,000 PSI		f'c = 4,000 PSI		f'c = 5,000 PSI AND HIGHER		f'c = ALL	
BAR LOCATION	REGULAR CLASS	TOP CLASS	REGULAR CLASS	TOP CLASS	REGULAR CLASS	TOP CLASS	STD LAP	ENCLOSED W/ SPIRAL TIES
SIZE								
#3	24"	31"	19"	24"	17"	22"	12"	12"
#4	32"	41"	25"	33"	23"	29"	15"	12"
#5	39"	51"	31"	41"	28"	36"	19"	14"
#6	47"	61"	37"	49"	34"	43"	23"	17"
#7	69"	89"	54"	71"	49"	63"	26"	20"
#8	78"	102"	62"	81"	56"	72"	30"	23"
#9	88"	115"	70"	91"	63"	81"	34"	25"
#10	100"	129"	79"	102"	70"	92"	38"	29"
#11	110"	143"	87"	113"	78"	102"	42"	32"

NOTES:
1. TOP BARS ARE ANY HORIZONTAL BARS PLACED SO THAT MORE THAN 12" OF FRESH CONCRETE IS CAST IN THE MEMBER BELOW THE REINFORCEMENT.
2. UNLESS NOTED OTHERWISE, LAP SPLICES IN CONCRETE BEAMS, SLABS, AND WALLS. WILL BE CLASS B TENSION SPLICE LENGTHS. COLUMNS SHALL HAVE STANDARD COMPRESSION LAP SPLICE.
3. CONTACT STRUCTURAL ENGINEER IF CENTER TO CENTER SPACING OF REINFORCING IS LESS THAN OR EQUAL TO 3 BAR DIAMETERS, <3db OR 2db CLEAR SPACING BETWEEN BARS.
4. ALL SPLICES MUST BE FULL CONTACT.
5. SPLICES WITH #14 OR #18 BARS SHALL USE MECHANICAL COUPLERS. (THIS INCLUDES #14 OR #18 BARS TO SMALLER BARS SHOWN IN SCHEDULE).

04 LAP SCHEDULE FOR REINFORCING STEEL

NO SCALE

NOTES:
1. MAT FOUNDATION PER PLAN.
2. 8" CONCRETE CURB WITH (1) #4 CONTINUOUS.
3. PROVIDE 1 #4 HOOKED DOWEL AT 24" O.C. – TYPICAL AT CURB.
4. FINISHED GRADE, SEE CIVIL.
5. RECOMPACTED FILL PER GEOTECH REPORT.
6. REFER TO GEOTECH REPORT.
7. CONTINUOUS WATER STOP.
8. 1/2" CHAMFER – TYP.

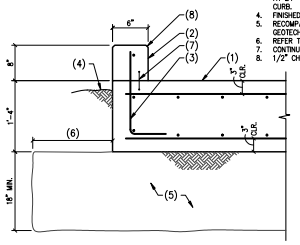

01 CONCRETE CURB AT MAT FOOTING

NO SCALE

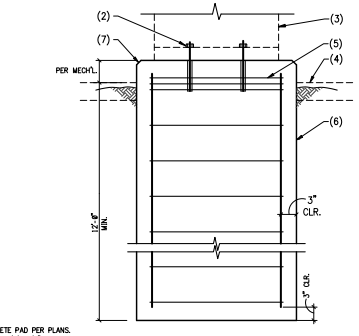

AT CONTRACTOR OPTION

NOTES:
1. CONCRETE PAD PER PLANS.
2. PROVIDE (4) 3/4"ø EPOXY BOLTS FOR BY-PASS VALVE TO MAT CONNECTION. EPOXY WITH HILTI RE 500 SD EPOXY WITH 7" MINIMUM EMBED.
3. BYPASS VALVE BY OTHERS.
4. FINISHED GRADE OR CONCRETE SLAB AS OCCURS.
5. 3 #3 TIES IN TOP 5".
6. 36" DIA. CONCRETE BASE WITH 13 #8 VERTICALS AND #3 TIES AT 12" O.C.
7. 1/2" CHAMFER.

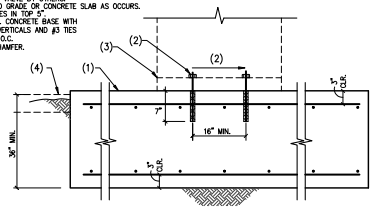

07 CONCRETE PAD AT BYPASS VALVE

NO SCALE

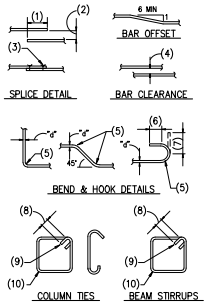

NOTES:
1. LAP – SEE G.S.N.
2. MAXIMUM 1/5 LAP BUT NOT MORE THAN 6".
3. WIRE TIES.
4. 1d (1" MINIMUM).
5. RADIUS=3d FOR BARS NOT OVER #8; 4d FOR #9, #10 AND #11 BARS; 5d FOR #14 AND #18 BARS. 5d FOR ALL GRADE 40 BARS WITH 180 DEGREE HOOK.
6. 4d (4" MINIMUM).
7. 12d (90 DEGREE HOOK).
8. 6d (4" MINIMUM).
9. 135 DEGREE BEND.
10. BEND AROUND 1 1/2" PIN FOR #3 BARS. BEND AROUND 2" PIN FOR #4 BARS. BEND AROUND 2 1/2" PIN FOR #5 BARS.

05 TYPICAL CONCRETE REINFORCING BAR DETAILS

NO SCALE

NOTES:
1. 2"x2"x1/4" CONT. GALVANIZED STEEL ANGLE WITH 1/2"ø x6" HEADED STUD AT 12" O.C.
2. #5 REINFORCING AT 10" O.C.
3. CONCRETE MAT FOUNDATION.
4. DRILL AND EPOXY #5 BENT BAR PER GSN. SPACING TO MATCH SUMP PIT REINFORCING.
5. GRATING PER CIVIL DRAWINGS.
6. CONT. WATER STOP.
7. CONCRETE CURB BEYOND.

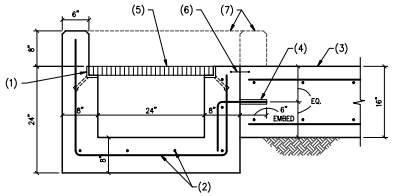

02 SUMP PIT DETAIL

NO SCALE

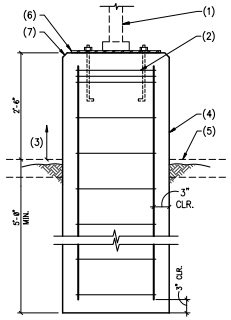

NOTES:
1. LIGHT POLE AND ANCHOR BOLTS BY OTHERS.
2. 3 #3 TIES IN TOP 5".
3. TOP OF LIGHT POLE TO BE 18'-0" ABOVE FINISHED GRADE – MAX.
4. 24" DIA. CONCRETE BASE WITH 6 #6 VERTICALS AND #3 TIES AT 12" O.C.
5. FINISHED GRADE OR CONCRETE SLAB AS OCCURS.
6. BASEPLATE AND ANCHOR BOLTS BY OTHERS.
7. 1/2" CHAMFER.

06 TYPICAL LIGHT POLE BASE

NO SCALE

NOTES:
1. CORNER BARS SAME SIZE AND SPACING AS HORIZONTAL REINFORCING. LAP PER G.S.N. (24" MINIMUM).
2. ALTERNATE BEND.
3. CONCRETE STEM WALL OR FOOTING.
4. REINFORCING PER PLANS AND /OR G.S.N.

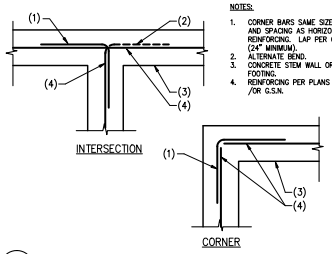

03 PLAN – CORNER REINFORCING IN CONCRETE FOOTING AND/OR STEM WALL

NO SCALE

PK ASSOCIATES, LLC
7434 E. McDowell Drive
Scottsdale, Arizona 85257
Phone:(480) 922-8884
Fax:(480) 922-7836
Email:cost@pkstructural.com
Website:www.pkstructural.com

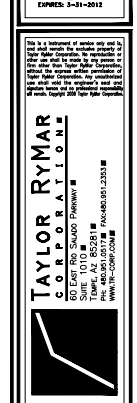

This is a instrument of service only and is the property of Taylor RyMar Corporation. Taylor RyMar Corporation. No reproduction or other use shall be made by any person or firm other than Taylor RyMar Corporation, without the express written permission of Taylor RyMar Corporation. Any reproduction or use shall exist the engineer's seal and signature hereon and as protected responsible all seals. Copyright 2008 Taylor RyMar Corporation.

TAYLOR RYMAR CORPORATION
60 East Rio Salado Parkway
Suite 10
Tempe, AZ 85281
Ph: 480.951.0517 FAX:480.351.2353
www.TR-CORP.COM

ROOSEVELT IRRIGATION DISTRICT #92
WATER TREATMENT INSTALLATION

43RD AVENUE, 1/4 MI. NORTH OF BUCKEYE, PHOENIX, ARIZONA

Sheet Title: DETAILS

REVISIONS:

DATE:	12/15/2011
DRAWN BY:	FML
CHECKED BY:	RH
SCALE:	AS NOTED
PROJECT NO:	11322
SHEET	S1.2

Dec 15, 2011 – 5:27pm
F:\E_Drive_Cadd\2011 JOBS\Wood Patel\RID – Roosevelt Irrigation District\Site #92\ALL\S1-2.dwg

ABBREVIATIONS

AC	AIR CONDITIONING UNIT
AD	ACCESS DOOR
AFF	ABOVE FINISHED FLOOR
AH	AIR HANDLER (SPLIT REFRIG)
AHU	AIR HANDLING UNIT
AL	ACOUSTICAL LINING
AP	ACCESS PANEL
BB	ELECTRIC BASEBOARD RADIATION
B	BOILER
BDD	BACK DRAFT DAMPER
BFC	BELOW FINISHED CEILING
BOB	BOTTOM OF BEAM
BOD	BOTTOM OF DUCT
BOP	BOTTOM OF PIPE
C	CHILLER
CD	CEILING DIFFUSER
CFM	CUBIC FEET PER MINUTE
CHWP	CHILLED WATER PUMP
CHWR	CHILLED WATER RETURN
CHWS	CHILLED WATER SUPPLY
CO	CLEAN OUT
CP	CONDENSATE PUMP
CWR	CONDENSER WATER RETURN
CWS	CONDENSER WATER SUPPLY
CT	COOLING TOWER
CU	CONDENSING UNIT
CUH	CABINET UNIT HEATER
CVB	CONSTANT VOLUME BOX
CWP	CONDENSER WATER PUMP
DB	DRY BULB
DS	DUCT SILENCER
DWP	DOMESTIC WATER PUMP
EAT	ENTERING AIR TEMPERATURE
EC	ELECTRICAL CONTRACTOR
EF	EXHAUST FAN
EJ	EXPANSION JOINT
ER	EXHAUST REGISTER
ESP	EXTERNAL STATIC PRESSURE
ET	EXPANSION TANK
EWT	ENTERING WATER TEMPERATURE
EWC	ELECTRIC WATER COOLER
FA	FREE AREA
FX	FLEXIBLE CONNECTION
FC	FAN COIL UNIT
FD	FIRE DAMPER
FLR	FLOOR
FOB	FLAT ON BOTTOM
FOT	FLAT ON TOP
FOP	FUEL OIL PUMP
FP	FIRE PUMP
FPM	FEET PER MINUTE
FTR	FINNED TUBE RADIATION
GC	GENERAL CONTRACTOR
GPH	GALLONS PER HOUR
GPM	GALLONS PER MINUTE
HD	HAND DAMPER
HP	HEAT PUMP
HV	HEATING AND VENTILATING UNIT
HWC	HOT WATER CONVERTER
HWP	HOT WATER PUMP
HWR	HEATING HOT WATER RETURN
HWS	HEATING HOT WATER SUPPLY
HX	HEAT EXCHANGER
HZ	HERTZ
ID	INSIDE DIAMETER
LAT	LEAVING AIR TEMPERATURE
LWT	LEAVING WATER TEMPERATURE
LD	LINEAR DIFFUSER
LF	LINEAR FEET
MC	MECHANICAL CONTRACTOR
MTD	MOUNTED
MOD	MOTOR OPERATED DAMPER
MUA	MAKE-UP AIR UNIT
NC	NORMALLY CLOSED
NO	NORMALLY OPEN
NIC	NOT IN CONTRACT
NK	NECK
OA	OUTSIDE AIR
OAI	OUTSIDE AIR INTAKE
OAT	OUTSIDE AIR TEMPERATURE
OC	ON CENTER
OD	OUTSIDE DIAMETER
OBD	OPPOSED BLADE DAMPER
PBD	PARALLEL BLADE DAMPER
PRV	PRESSURE REDUCING VALVE
PTAC	PACKAGED TERMINAL AIR CONDITIONER
RA	RETURN AIR
RG	RETURN AIR GRILLE
RR	RETURN AIR REGISTER
RCP	REFLECTED CEILING PLAN
RHC	REHEAT COIL
RF	RETURN FAN
SA	SUPPLY AIR
SR	SUPPLY AIR REGISTER
SCG	SMOKE CONTROL GRILLE
SD	SMOKE DAMPER
SEF	SMOKE EXHAUST FAN
SF	SUPPLY FAN
SP	STATIC PRESSURE
TG	TRANSFER GRILLE
TYP	TYPICAL
UH	UNIT HEATER
UON	UNLESS OTHERWISE NOTED
VAV	VARIABLE AIR VOLUME UNIT
VD	VOLUME DAMPER
VTR	VENT THRU ROOF
WB	WET BULB
WMS	WIRE MESH SCREEN

MECHANICAL SYMBOL SCHEDULE:

NOT ALL SYMBOLS USED. ALL MOUNTING HEIGHTS TO CENTER OF BOX AND ALL DEVICES TO COMPLY WITH ADA REQUIREMENTS, WHERE APPLICABLE.

DUCTWORK SYMBOLS

DOUBLE LINE	SINGLE LINE	
		EXISTING EQUIPMENT OR DUCTWORK TO BE REMOVED.
		EXISTING DUCTWORK TO REMAIN
20/12		DUCT SIZE, FIRST FIGURE IS SIDE SHOWN
AD	AD	ACCESS DOOR
		RADIUS ELBOW (R=1.5)
		VANED ELBOW
		BRANCH DUCT TAKE-OFF
D R	D R	RISE OR DROP DIRECTION OF AIR FLOW
		FLEXIBLE CONNECTION (FXC)
		TRANSITION, RECTANGULAR TO ROUND
		DUCT SECTION, SUPPLY
		DUCT SECTION, RETURN
		DUCT SECTION, EXHAUST
UP		CHANGE IN ELEVATION (UP), (DN)
		ROUND DUCT VERTICAL OFFSET (USING 45° ELBOWS U.N.O.)
FLEXIBLE DUCT		FLEXIBLE DUCT AND SPIN-IN
		CEILING SUPPLY DIFFUSER WITH DESIGN CFM ARROWS INDICATE THROW PATTERN OTHER THAN 4-WAY
		CEILING RETURN GRILL WITH DESIGN CFM
		CEILING EXHAUST GRILLE WITH DESIGN CFM
		SIDEWALL/DUCT MOUNTED SUPPLY GRILLE W/NECKSIZE AND CFM
		SIDEWALL RET/EXH GRILLE W/NECKSIZE AND CFM
UC		UNDERCUT DOOR
DL		DOOR LOUVER (FREE AREA REQUIRED INDICATED IN SQUARE FEET)
FD		FIRE (1 1/2 HOUR) (FD)
		MANUAL (BALANCING)
SD		SMOKE
		CONTROL
FS		FIRE / SMOKE (FD/SM)
		BUTTERYFLY DAMPER
		SLIDE
DP		DIFFERENTIAL PRESSURE SENSOR
R		RESISTANCE TEMPERATURE SENSOR
S		"VENTILATION SYSTEM EMERGENCY SHUTOFF"
SD		SMOKE DETECTOR
M		MOISTURE SENSOR (RELATIVE HUMIDITY)
D		LOW POINT DUCT DRAIN
SP		DUCT MOUNTED STATIC PRESSURE SENSOR TRANSMITTER

PIPING SYMBOLS

	EXISTING PIPING TO REMAIN (SERVICE AS INDICATED)
	EXISTING PIPING TO BE REMOVED (SERVICE AS INDICATED)
	NEW PIPING (SERVICE AS INDICATED)
	DIRECTION OF FLOW
	DIRECTION OF PITCH
CWS	CONDENSER WATER SUPPLY
CWR	CONDENSER WATER RETURN
CHWS	CHILLED WATER SUPPLY
CHWR	CHILLED WATER RETURN
CGS	CHILLED GLYCOL SUPPLY
CGR	CHILLED GLYCOL RETURN
HWS	HEATING HOT WATER SUPPLY
HWR	HEATING HOT WATER RETURN
LPS	LOW PRESSURE STEAM (PSI 15)
MPS	MEDIUM PRESSURE STEAM (PSI 30)
HPS	HIGH PRESSURE STEAM (PSI 125)
LPC	LOW PRESSURE CONDENSATE
PC	PUMPED CONDENSATE
	UNION
	FLANGED CONNECTION
	REDUCER, CONCENTRIC
	REDUCER, ECCENTRIC
	TEE, TURNED DOWN
	TEE, TURNED UP
E	CAP
	CONNECTION, TOP
	ELBOW, TURNED UP
	ELBOW, TURNED DOWN
	CONNECTION, BOTTOM
	"Y" STRAINER WITH BLOWDOWN
	GATE
	GLOBE
	BUTTERFLY
	CHECK
	BALL
	PNEUMATIC CYLINDER OPERATED
S	SOLENOID OPERATED
	3-WAY

REFERENCE SYMBOLS

XX / X.XX	SECTION NUMBER / BUILDING SECTION REFERENCE / SHEET WHERE SECTION IS DRAWN
XX / X.XX	DETAIL NUMBER / DETAIL REFERENCE / SHEET WHERE DETAIL IS DRAWN
X / X-X	EQUIPMENT IDENTITY (SEE EQUIPMENT ABBREVIATION LIST AND SCHEDULES) / EQUIPMENT NUMBER / SYSTEM NUMBER (IF APPLICABLE)
	POINT OF CONNECTION

SHEET INDEX

M0.0	MECHANICAL ABBREVIATIONS, SYMBOLS & NOTES
M1.1	MECHANICAL PIPING PLAN
M2.1	PIPE ISOMETRIC
M3.1	MECHANICAL DETAILS
M4.1	MECHANICAL SCHEDULES AND SPECIFICATIONS

PROJECT GENERAL NOTES – HVAC

1. ALL WORK SHALL CONFORM TO 2006 INTERNATIONAL MECHANICAL CODE, ALL STATE AND LOCAL CODES, RULES AND REGULATIONS AND ORDINANCES.
2. SUBMISSION OF PROPOSAL DIRECTLY OR INDIRECTLY IN CONNECTION WITH THIS WORK SHALL IMPLY THAT THE BIDDER HAS EXAMINED THE JOB SITE UNDER WHICH HE WILL BE OBLIGATED TO OPERATE SHOULD HE BE AWARDED THE WORK UNDER THIS CONTRACT. NO EXTRA CHARGE WILL BE ALLOWED FOR FAILURE OF ANY BIDDER TO EXAMINE THE SITE PRIOR TO BID.
3. CONTRACTOR SHALL VISIT THE SITE AND VERIFY ALL DIMENSIONS IN THE FIELD, AND SHALL ADVISE THE ARCHITECT/ENGINEER AND THE OWNER OF ANY DISCREPANCIES BEFORE PERFORMING THE WORK.
4. CONTRACTOR SHALL SECURE AND PAY ALL FEES AND PERMITS PERTAINING TO THE CONTRACT.
5. ALL EQUIPMENT SHALL BE INSTALLED IN STRICT COMPLIANCE WITH THE MANUFACTURER'S WRITTEN INSTRUCTIONS. THE CONTRACTOR SHALL PROVIDE ALL HANGERS AND SUPPORTS REQUIRED FOR A COMPLETE INSTALLATION.
6. CONTRACTOR SHALL BE RESPONSIBLE FOR WORKMEN'S IDENTIFICATION AND BADGING, SAFETY AND FIRE PROTECTION, CONTRACTOR'S LIABILITY INSURANCE, BARRICADES, WARNING SIGNS, TRASH REMOVAL, CUTTING AND PATCHING.
7. CONTRACTOR SHALL SCHEDULE ALL SHUTDOWNS THAT AFFECT UTILITIES AND PORTIONS OF THE BUILDING THAT MUST REMAIN IN OPERATION WITH THE OWNER.
8. CONTRACTOR SHALL COORDINATE ALL WORK WITH THE OWNER AND ALL OTHER CONTRACTORS.
9. CONTRACTOR SHALL BE RESPONSIBLE FOR ALL RIGGING, HANDLING AND PROTECTION OF MATERIALS.
10. CONTRACTOR SHALL PROVIDE LABOR TO RECEIVE, UNLOAD, STORE, PROTECT AND TRANSFER TO POINT OF INSTALLATION, OWNER FURNISHED ITEMS.
11. CONTRACTOR SHALL BE RESPONSIBLE FOR ALL CORING AS IT RELATES TO HIS WORK.

RECORD DRAWING (04/23/12)

THIS IS PART OF A RECORD DOCUMENT. RECORD DOCUMENTS ARE BASED ON REPORTS SUBMITTED BY OTHERS. ENGINEER CANNOT ASSURE NOR ASSUME ANY RESPONSIBILITY OR LIABILITY FOR THE ACCURACY OF RECORD DOCUMENTS. USERS OF RECORD DOCUMENTS ARE CAUTIONED AND ADVISED TO OBTAIN INDEPENDENT VERIFICATION OF ACTUAL CONDITIONS.

This is a instrument of service only and is and shall remain the exclusive property of Taylor Ryder Corporation. No reproduction or publication of this plan or any part thereof, or any other thus Taylor Ryder Corporation, without the express written permission of Taylor Ryder Corporation. Any unauthorized use shall void the engineer's seal and signature hereon and the engineer disclaims all liabilities. Copyright 2008 Taylor Ryder Corporation.

TAYLOR RYMAR CORPORATION
60 EAST RIO SALADO PARKWAY
SUITE 1010
TEMPE, AZ 85281
PHONE: 480.951.2553 FAX: 480.951.2553
WWW.TR-CORP.COM

ROOSEVELT IRRIGATION DISTRICT #92
WATER TREATMENT INSTALLATION
43RD AVENUE, 1/4 MI. NORTH OF BUCKEYE, PHOENIX, ARIZONA

MECHANICAL ABBREVIATIONS, SYMBOLS & NOTES

REVISIONS:

DATE:	12/14/2011
DRAWN BY:	RAA
CHECKED BY:	DLB
SCALE:	NONE
PROJECT NO:	011175.00
SHEET	M0.0

Apr 23, 2012 – 2:01pm
P:\2011 Projects\011175.00 – RID Water Treatment\Mechanical\RID-92\As-Built\Site-92.dwg

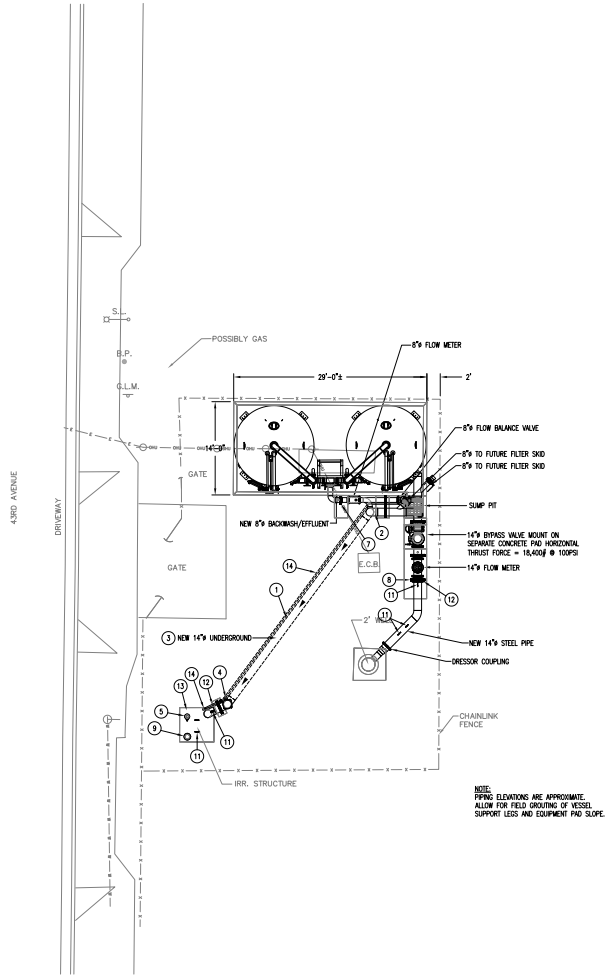

NOTE:
PIPING ELEVATIONS ARE APPROXIMATE. ALLOW FOR FIELD GROUTING OF VESSEL SUPPORT LEGS AND EQUIPMENT PAD SLOPE.

WELLSITE #92 PIPING PLAN

SCALE: 1/8" = 1'-0"

NORTH

KEY NOTES:

1. PROVIDE MINIMUM OF 48" EARTH COVER OVER BURIED PIPE SECTION TO ALLOW HEAVY EQUIPMENT TRAVEL OVER PIPE.
2. PROVIDE POURED-IN-PLACE CONCRETE THRUST BLOCK AT 90° ELBOWS BELOW GRADE.
3. WRAP STEEL PIPE WITH 20 MIL PVC TAPE OR PIPE SLEEVE TO 12" ABOVE FINISH GRADE SEAL PIPE WRAP WATER TIGHT ABOVE GRADE.
4. 3/4" THREADED-O-LET FOR PIPE LINE TEST PORT.
5. INSTALL #0400 MALE 4"ø HOSE CAM-LOK FITTING W/ 4" BALL VALVE.
6. SIEMENS MODEL #HP1220 (NEW) 1,000-GPM CAPACITY LGAC VESSEL SKID #1 (LEAD/LAG).
7. PIPE SUPPORT (TYP.) ANCHORED TO CONCRETE PAD.
8. PIPE SUPPORT (TYP.) SEE STRUCTURAL DWG. FOR CONCRETE PAD DETAILS.
9. CARBON FILTER/TANK BREATHER.
10. (2)-8"ø MECHANICAL COUPLING.
11. 1/4"w"x4"x2"ø WELDED LIFTING EYELET.
12. (1)-14"ø MECHANICAL COUPLING.
13. INSTALL NEW "AIR-TIGHT" 3/8" STEEL PLATE LID ON RECEIVER BOX.
    - RECEIVER BOX LID SHALL BE FURNISHED AND INSTALLED BY MECH. CONTRACTOR.
    - LID SHALL BE CLEANED AND RECEIVE FULL EPOXY PRIMER COAT AND FINISH COAT AFTER ALL WELDING AND CUTTING OPERATIONS ARE COMPLETE.
    - PROVIDE (2)-WELDED STEEL LIFTING EYELETS ON TOP OF COVER.
    - PROVIDE 1/8"x1"x1" WELDED ANGLE FRAME TO SET AND SEAL COVER AT TOP OF RECEIVER BOX. ANCHOR FRAME TO CURB OF CONCRETE RECEIVER BOX.
    - PERIMETER OF LID, AND "CUT-OUT" OPENING OF 14" DISCHARGE PIPE SHALL BE MADE AIR TIGHT BY SEALING WITH "RTV" FLEXIBLE SEALANT USE DOW CORNING #734 "ONE-PART" SOLVENT-LESS SILICONE SEALANT, OR EQUAL. APPLY SEALANT PER MANUFACTURER'S INSTRUCTIONS.
14. RUN 2"ø GALV. STEEL SUMP PUMP DISCHARGE LINE IN SAME TRENCH AS 14"ø PIPE.

UNDERGROUND PIPE

BACKFILL & COMPACTION

OVER-EXCAVATE PIPE TRENCH TO ALLOW FOR HAND-PLACEMENT OF A 3" DEPTH OF COMPACTED CLEAN SAND BEDDING BENEATH THE PIPE.

BACKFILL TRENCH WITH COMPACTED HAND-PLACED CLEAN SAND TO A COVERING DEPTH OF 12" OVER THE PIPE.

BACKFILL REMAINDER OF TRENCH WITH NATIVE SOIL REMOVE ALL DEBRIS, ROCKS AND HARD SOIL MATERIALS GREATER THAN 1" SIZE FROM BACKFILL MATERIAL.

COMPACT ALL BACKFILL MATERIAL PLACED INTO TRENCH IN 6" LAYERS. COMPACTION SHALL COMPLY WITH REQUIREMENTS OF THE SITE GEO-TECHNICAL REPORT.

MIN. REQUIREMENTS SHALL COMPLY WITH MAG STANDARD 601.4. WITH COMPACTION PER MAG STANDARD TABLE 601.2.

PIPE PRESSURE TESTING

1. PRESSURE TEST DIRECT-BURIED STEEL PIPE AT 100 PSIG WATER PRESSURE BEFORE EXTERNAL CORROSION PROTECTION IS APPLIED TO WELDED JOINTS. HOLD TEST PRESSURE FOR 4 HOURS WITHOUT EVIDENCE OF PRESSURE LOSS OR LEAKAGE. REPAIR ALL LEAK SITES AND RETEST TO PROVE LEAKTIGHT BEFORE COVERING PIPE JOIN(S).
2. PRESSURE TEST ALL ABOVE-GROUND WATER PIPE IN MANNER LISTED IN WATER PIPING NOTE 1.9 ON SHEET M4.1.

RECORD DRAWING (04/23/12)

THIS IS PART OF A RECORD DOCUMENT. RECORD DOCUMENTS ARE BASED ON REPORTS SUBMITTED BY OTHERS. ENGINEER CANNOT ASSURE NOR ASSUME ANY RESPONSIBILITY OR LIABILITY FOR THE ACCURACY OF RECORD DOCUMENTS. USERS OF RECORD DOCUMENTS ARE CAUTIONED AND ADVISED TO OBTAIN INDEPENDENT VERIFICATION OF ACTUAL CONDITIONS.

This is a instrument of service only and is and shall remain the exclusive property of Taylor Ryder Corporation. No reproduction or publication of this drawing or any part thereof, in any form other than Taylor Ryder Corporation, without the express written permission of Taylor Ryder Corporation. Any unauthorized use shall void the engineer's seal and signature hereon and shall be at the user's sole risk and expense. Copyright 2008 Taylor Ryder Corporation. all rights reserved.

TAYLOR RYMAR
CORPORATION
60 East Rio Salado Parkway
Suite 1010
Tempe, Az 85281
Phone: 480.951.2553
Fax: 480.951.2553
www.TR-CORP.COM

ROOSEVELT IRRIGATION DISTRICT #92
WATER TREATMENT INSTALLATION
43RD AVENUE, 1/4 MI. NORTH OF BUCKEYE, PHOENIX, ARIZONA
Sheet Title: WELLSITE #92 PIPING PLAN

REVISIONS:

DATE:	12/14/2011
DRAWN BY:	RAA
CHECKED BY:	DLB
SCALE:	AS NOTED
PROJECT NO:	011175.00
SHEET	M1.1

Apr 23, 2012 - 2:02pm
P:\2011 Projects\011175.00 - RID Water Treatment\Mechanical\RID-92\As-Built\Site-92.dwg

KEY NOTES:

1. INSTALL 8" FLANGES FOR PIPE LINE FLOW METER. FLOW METERS ARE FURNISHED BY VERTECH AND INSTALLED BY MECH. CONTR. FLOW METER WIRING IS PROVIDED BY OTHERS.
2. ANCHOR PIPE SUPPORT TO MAIN CONCRETE EQUIPMENT PAD, OR TO CONCRETE PADS LOCATED "AT GRADE". REFER TO STRUCTURAL DWG'S FOR PAD LOCATION AND SIZES.
3. ALL PIPE SUPPORTS SHALL BE CONSTRUCTED WITH UNISTRUT (P1001) FORMED METAL MEMBERS AND ACCESSORY FITTINGS, OR FULL-WELDED STRUCTURAL STEEL MEMBERS. PROVIDE INTERNAL AND EXTERNAL BRACING OF EACH PIPE SUPPORT TO MAKE IT "RIGID", INSTALL 1-1/2"x1-1/2" STEEL ANGLE CLIPS AT EACH PIPE SUPPORT TO KEEP PIPE CENTERED.
4. INSTALL 14" FLANGE FOR PIPE LINE FLOW METER. FLOW METER IS FURNISHED BY VERTECH AND INSTALLED BY MECH. CONTR. FLOW METER WIRING IS PROVIDED BY OTHERS.
5. STEEL RECEIVER LID, 3/8" PLATE, FURNISHED AND INSTALLED BY MECH. CONTR. SEE KEYNOTE "13" ON SHEET M1.1.
6. 1/2"ø WELDED THREAD-O-LET W/ 1/2"ø PIPE PLUG.

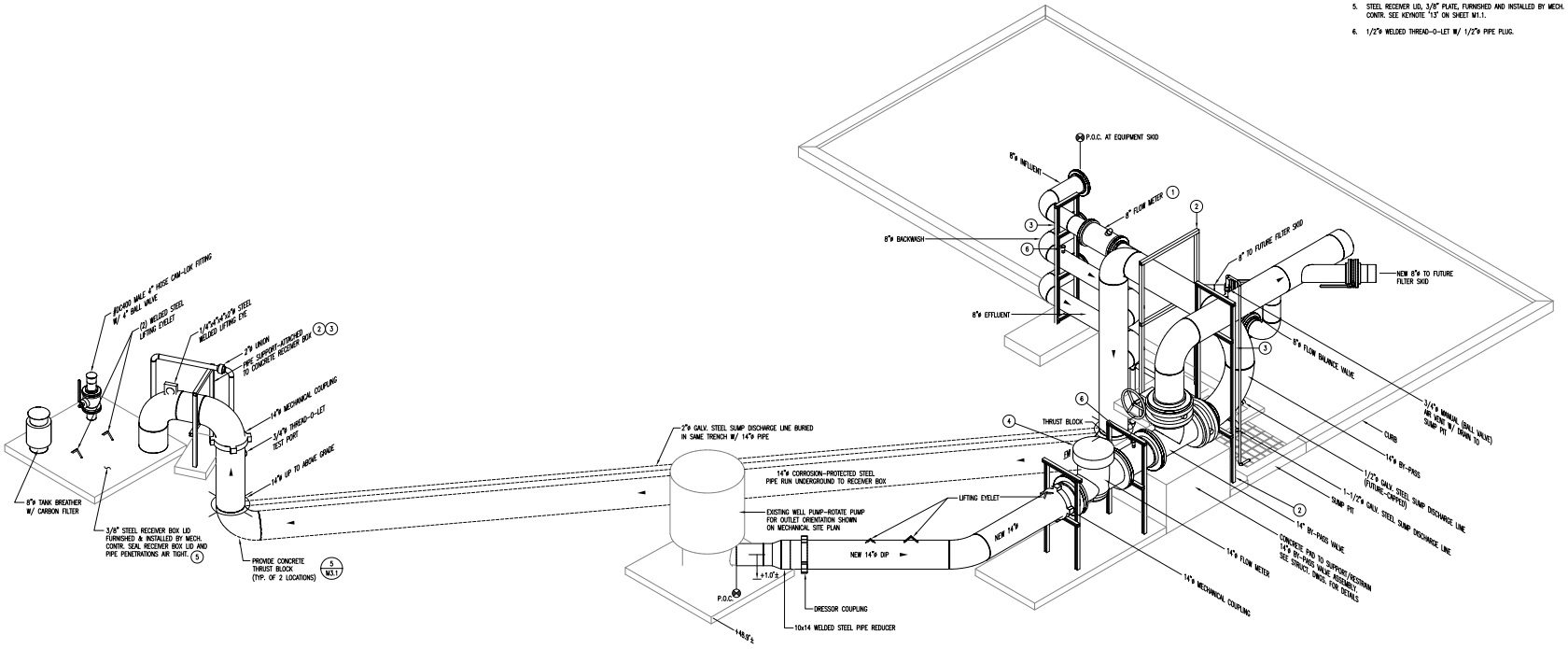

RID WELL SITE #92 PIPING ISOMETRIC

N.T.S.

RECORD DRAWING (04/23/12)

THIS IS PART OF A RECORD DOCUMENT. RECORD DOCUMENTS ARE BASED ON REPORTS SUBMITTED BY OTHERS. ENGINEER CANNOT ASSURE NOR ASSUME ANY RESPONSIBILITY OR LIABILITY FOR THE ACCURACY OF RECORD DOCUMENTS. USERS OF RECORD DOCUMENTS ARE CAUTIONED AND ADVISED TO OBTAIN INDEPENDENT VERIFICATION OF ACTUAL CONDITIONS.

This is a instrument of service only and is and shall remain the exclusive property of Taylor Ryder Corporation. No reproduction or publication of this drawing or the design shown thereon may be made without the express written permission of Taylor Ryder Corporation. Any unauthorized use shall void the engineer's seal and all liability known and implied resulting therefrom. Copyright 2008 Taylor Ryder Corporation.

TAYLOR RYMAR
CORPORATION
60 East Rio Salado Parkway
Suite 1010
Tempe, Az 85281
Phone: 480-967-1011 Fax: 480.951.2353
www.TR-CORP.COM

ROOSEVELT IRRIGATION DISTRICT #92
WATER TREATMENT INSTALLATION
43RD AVENUE, 1/4 MI. NORTH OF BUCKEYE, PHOENIX, ARIZONA

SHEET TITLE: RID WELL SITE #92 PIPING ISOMETRIC

REVISIONS:

DATE:	12/14/2011
DRAWN BY:	RAA
CHECKED BY:	DLB
SCALE:	NONE
PROJECT NO:	011175.00
SHEET	M2.1

Apr 23, 2012 - 2:03pm
P:\2011 Projects\011175.00 - RID Water Treatment\Mechanical\RID-92\As-Built\Site-92.dwg

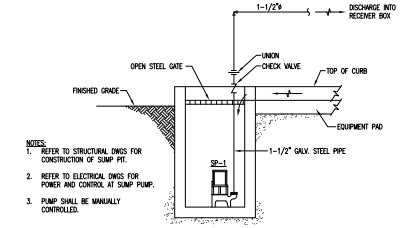

NOTES:
1. REFER TO STRUCTURAL DWGS FOR CONSTRUCTION OF SUMP PIT.
2. REFER TO ELECTRICAL DWGS FOR POWER AND CONTROL AT SUMP PUMP.
3. PUMP SHALL BE MANUALLY CONTROLLED.

4 / M3.1 **SUMP PUMP DETAIL©**
NOT TO SCALE

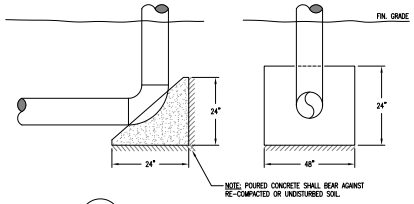

5 / M3.1 **THRUST BLOCK AT PIPING©**
NOT TO SCALE

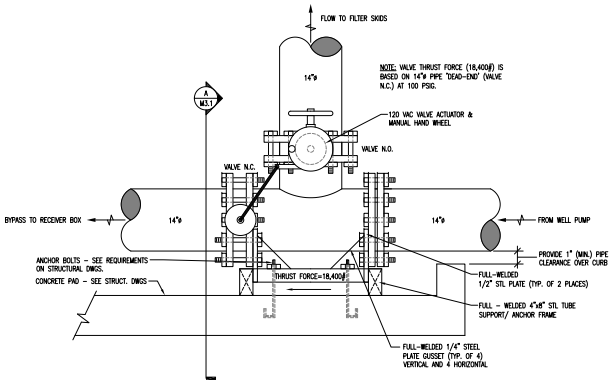

1 / M3.1 **BY-PASS VALVE DETAIL©**
NOT TO SCALE

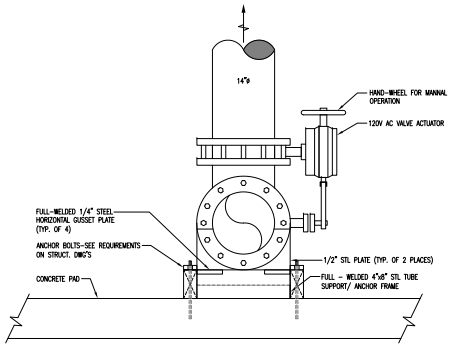

2 / M3.1 **SECTION 'A'**
NOT TO SCALE

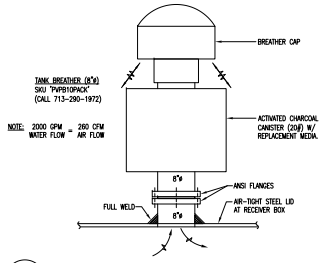

3 / M3.1 **RECEIVER BOX BREATHER DETAIL©**
NOT TO SCALE

RECORD DRAWING (04/23/12)

THIS IS PART OF A RECORD DOCUMENT. RECORD DOCUMENTS ARE BASED ON REPORTS SUBMITTED BY OTHERS. ENGINEER CANNOT ASSURE NOR ASSUME ANY RESPONSIBILITY OR LIABILITY FOR THE ACCURACY OF RECORD DOCUMENTS. USERS OF RECORD DOCUMENTS ARE CAUTIONED AND ADVISED TO OBTAIN INDEPENDENT VERIFICATION OF ACTUAL CONDITIONS.

This is a instrument of service only and is and shall remain the exclusive property of Taylor Rymar Corporation. No reproduction or distribution of this drawing or any part thereof shall be made without the express written permission of Taylor Rymar Corporation. Any unauthorized use shall void the engineer's seal and signature hereon and shall be a violation of all rights. Copyright 2008 Taylor Rymar Corporation.

TAYLOR RYMAR CORPORATION
60 East Rio Salado Parkway
Suite 1010
Tempe, Az 85281
Phone: 480.951.1011 FAX:480.951.2353
www.TR-CORP.COM

ROOSEVELT IRRIGATION DISTRICT #92
WATER TREATMENT INSTALLATION
43RD AVENUE, 1/4 MI. NORTH OF BUCKEYE, PHOENIX, ARIZONA

Sheet Title: MECHANICAL DETAILS

REVISIONS:

DATE:	12/14/2011
DRAWN BY:	RAA
CHECKED BY:	DLB
SCALE:	NONE
PROJECT NO:	011175.00
SHEET	M3.1

Apr 23, 2012 - 2:03pm
P:\2011 Projects\011175.00 - RID Water Treatment\Mechanical\RID-92\As-Built\Site-92.dwg

SUMP PUMP SCHEDULE

MARK	LOCATION AND SERVICE	GPM	HEAD FEET	MOTOR HP	VOLT/PH	SINGLE OR DUPLEX	MANUFACTURER AND MODEL NUMBER	REMARKS
SP-1	EQUIPMENT PAD SUMP	50	24	3/4	115/60	SINGLE	ZOELLER MODEL N145	NOTES 1,2,3

NOTES:
1. SUMP PUMP SHALL BE FURNISHED AND INSTALLED BY PIPING CONTRACTOR.
2. SUMP PUMP SHALL BE FURNISHED WITHOUT FACTORY-INSTALLED AUTOMATIC CONTROL. MANUAL CONTROL OF PUMP OPERATION SHALL BE PROVIDED THRU MANUAL SWITCH FURNISHED AND INSTALLED BY ELECTRICAL CONTRACTOR.
3. SUMP PUMP SHALL BE FACTORY EQUIPPED WITH A 20 FOOT, UL LISTED, NEOPRENE POWER CORD WITH MOLDED PLUG AND GROUND WIRE.

AUTOMATIC CONTROL VALVE SCHEDULE

MARK	LOCATION AND SERVICE	VALVE TYPE	BODY DUTY	PIPE CONNECTIONS		VALVE ACTUATOR			MANUFACTURER & MODEL #	REMARKS
				SIZE	TYPE	TYPE	ACTION	POWER IN		
CV-1	EQUIPMENT PAD-BYPASS VALVE	3-WAY (3.TEE)	DIVERTING	14"ø	150# FLG.	ROTARY ELEC.	2-POS. ON/OFF	120V AC	VSI #3S2000SS-14/1200	NOTES 1,2,3,4,5

NOTES:
1. CONTROL VALVE/ACTUATOR SHALL BE FURNISHED AND INSTALLED BY PIPING CONTRACTOR CONTROL POWER AND CONTROL WIRING SHALL BE FURNISHED AND INSTALLED BY CONTROLS CONTRACTOR.
2. ACTUATOR ENCLOSURE SHALL BE RATED NEMA 4, WATERTIGHT.
3. PIPING CONTRACTOR SHALL REVIEW CONTROL VALVE DETAIL IN DRAWINGS, TO CONFIRM VALVE ORIENTATION AND FLOW DIRECTION, PRIOR TO ORDERING VALVE ASSEMBLY.
4. VALVE ASSEMBLY SHALL CONSIST OF A 14"ø 125# FLANGED DUCTILE-IRON TEE BODY MOUNTED WITH (2)-14"ø THREADED LUG-BODY BUTTERFLY VALVES (EPDM SEAT, 304 SS DISC, 416 SS SHAFT, PTFE BUSHINGS, 316 SS SHAFT-PINS) RATED FOR 100 PSI. ACTUATOR SHALL BE MOUNTED ON PRIMARY (N.O.) VALVE STEM AND CONNECTED TO (N.C.) VALVE STEM BY A STAINLESS STEEL LINKAGE.
5. VALVE/ ACTUATOR SUPPLIER: VSI-VALVE SOLUTIONS, INC. (SALES@VALVESOLUTIONS.COM) OR 770-740-0800.

MECHANICAL GENERAL SPECIFICATIONS

1.00 SCOPE OF WORK

1.1. THE CONTRACTOR IS RESPONSIBLE FOR ALL WORK, MATERIALS, AND LABOR TO SATISFY A COMPLETE WORKING SYSTEM WHETHER SPECIFIED OR IMPLIED.

1.2. ALL WORK IS TO BE PERFORMED IN STRICT COMPLIANCE WITH ALL CODES AND REGULATIONS GOVERNING WORK OF THIS NATURE.

1.3. THE CONTRACTOR SHALL, BEFORE SUBMITTING ANY PROPOSAL, EXAMINE THE PROPOSED SITE AND SHALL DETERMINE FOR HIMSELF THE CONDITIONS THAT MAY EFFECT THE WORK. NO ALLOWANCE SHALL BE MADE IF THE CONTRACTOR FAILS TO MAKE SUCH EXAMINATIONS.

1.4. ALL EQUIPMENT AND MATERIALS SHALL BE AS SPECIFIED OR "APPROVED EQUAL" BY THE ENGINEER.

2.00 ELECTRICAL

2.1. CONTRACTOR TO COORDINATE WITH ELECTRICAL CONTRACTOR FOR LOCATION OF WIRING FOR POWERED EQUIPMENT.

3.00 MISCELLANEOUS

3.1. DO NOT SCALE THIS DRAWING FOR EXACT DIMENSIONS. VERIFY ALL FIGURES, CONDITIONS, AND DIMENSIONS AT THE JOB SITE.

3.2. THE MECHANICAL PLANS ARE INTENDED TO BE DIAGRAMMATICAL AND ARE BASED ON ONE MANUFACTURER'S EQUIPMENT. THEY ARE NOT INTENDED TO SHOW EVERY ITEM IN ITS EXACT LOCATION, THE EXACT DIMENSIONS, OR ALL THE DETAILS OF THE EQUIPMENT. THE CONTRACTOR SHALL VERIFY THE ACTUAL DIMENSIONS OF THE EQUIPMENT PROPOSED TO ENSURE THAT THE EQUIPMENT WILL FIT IN THE AVAILABLE SPACE.

PIPE SUPPORT

1.00 PIPE SUPPORT

1.1. USE "FORMED METAL" (UNISTRUT) COMPONENTS OR WELDED STRUCTURAL STEEL SHAPES.

1.2. ANCHOR PIPE SUPPORT INTO CONCRETE PADS WITH 5/8"ø EXPANSION BOLTS.

1.3. PAINT UNCOATED STEEL TO MATCH PIPING.

WATER PIPING

1.00 MATERIAL WATER PIPING

1.1. 2" AND SMALLER: SCH. 40 GALVANIZED STEEL WITH THREADED FITTINGS, ASTM A-120.

1.2. 2" AND LARGER: SCH. 40 BLACK STEEL WITH WELDED OR FLANGED FITTINGS, ASTM A-120.

1.3. 2" AND SMALLER UNIONS SHALL BE MALLEABLE IRON BODY FOR FERROUS PIPING, BRONZE BODY FOR COPPER PIPING, GALVANIZED FOR GALVANIZED PIPING, THREADED OR SOLDER ENDS.

1.4. 2-1/2" AND LARGER UNIONS SHALL 150# BE FORGED STEEL FLANGES FOR FERROUS PIPING.

1.5. BALL VALVES – GENERAL SHUTOFF SERVICE OF WATER:
A. 2" AND SMALLER BALL VALVES SHALL BE 150SWP, 400WOG, BRONZE TWO PIECE BODY, FULL PORT, STAINLESS STEEL BALL, TEFLON SEAT AND RINGS, LEVER HANDLE AND SOLDER OR THREADED ENDS.

1.6. BUTTERFLY VALVES – GENERAL SHUTOFF SERVICE OF WATER:
A. 2-1/2" AND LARGER BUTTERFLY VALVES SHALL BE CAST IRON BODY, BRONZE DISC, SEATS AND SEATS SHALL BE CAPABLE OF SERVICE TO 250F, LUG ENDS, EXTENDED NECK, 10 POSITION LEVER HANDLE WITH MEMORY STOP.

1.7. CHECK VALVES – GENERAL SERVICE OF WATER:
A. 2" AND SMALLER CHECK VALVES SHALL BE 150SWP, 300WOG, BRONZE BODY, SWING CHECK DISC, THREADED ENDS, SUITABLE FOR HORIZONTAL OR VERTICAL INSTALLATION.
B. 2-1/2" AND LARGER CHECK VALVES SHALL BE 125SWP, 200WOG, CAST IRON BODY, SWING CHECK DISC, BRONZE TRIM, FLANGED ENDS, SUITABLE FOR HORIZONTAL OR VERTICAL INSTALLATION.

1.8. BALANCING VALVES – GENERAL SHUTOFF AND BALANCING SERVICE OF WATER:
A. 3" AND SMALLER BALANCING VALVE SHALL BE BRONZE BODY, BRASS BALL, TFE SEAT RINGS, DIFFERENTIAL PRESSURE READOUT PORTS WITH CHECK VALVES, DRAIN/PURGE PORT,MEMORY STOP FEATURE, CALIBRATED POINTER INDICATING DEGREE OF VALVE OPENING, TIGHT SHUTOFF WITH SOLDER OR THREADED ENDS.
B. 5" PIPE SIZE AND LARGER BALANCING VALVE SHALL BE CAST IRON BODY, BRASS VANE, DIFFERENTIAL PRESSURE READOUT PORTS WITH CHECK VALVES, MEMORY STOP FEATURE, CALIBRATED POINTER WITH FLANGED ENDS. BELL & GOSSETT #CB-BF.

1.9. TEST SHALL BE PERFORMED BY CONTRACTOR AND WITNESSED BY AUTHORIZED INSPECTOR. ALL PIPING SHALL BE TESTED TO WORKING PRESSURE OF NOT LESS THAT 100 PSIG. WHERE OPERATING PRESSURES EXCEED 50 PSIG, TEST PRESSURE SHALL BE TWO TIMES THE WORKING PRESSURE. TEST DURATION SHALL BE AT LEAST 30 MINUTES.

1.10. PAINT EXPOSED PIPING (EXCEPT GALVANIZED PIPE) WITH CORROSION RESISTANT PRIMER AND FLAT ENAMEL FINISH COAT. FINISH COAT COLOR SELECTION SHALL BE BY OWNER.

1.11. WRAP DIRECT-BURIED STEEL PIPE WITH 20-MIL PVC TAPE OR CONTINUOUS SLEEVE. EXTEND PIPE WRAP TO 12" ABOVE GRADE AND SEAL WATER TIGHT.

RECORD DRAWING (04/23/12)

THIS IS PART OF A RECORD DOCUMENT. RECORD DOCUMENTS ARE BASED ON REPORTS SUBMITTED BY OTHERS. ENGINEER CANNOT ASSURE NOR ASSUME ANY RESPONSIBILITY OR LIABILITY FOR THE ACCURACY OF RECORD DOCUMENTS. USERS OF RECORD DOCUMENTS ARE CAUTIONED AND ADVISED TO OBTAIN INDEPENDENT VERIFICATION OF ACTUAL CONDITIONS.

This is a instrument of service only and is and shall remain the exclusive property of Taylor Rymar Corporation. No reproduction or publication of this plan or any part thereof, in any form other than Taylor Rymar Corporation, without the express written permission of Taylor Rymar Corporation. Any unauthorized use shall void the engineer's seal and signature shown on this plan and all reproduced copies. Copyright 2008 Taylor Rymar Corporation.

TAYLOR RYMAR CORPORATION
60 EAST RIO SALADO PARKWAY
SUITE 1010
TEMPE, AZ 85281
PHONE: 480.951.2553
FAX: 480.951.2553
WWW.TR-CORP.COM

ROOSEVELT IRRIGATION DISTRICT #92
WATER TREATMENT INSTALLATION
43RD AVENUE, 1/4 MI. NORTH OF BUCKEYE, PHOENIX, ARIZONA
MECHANICAL SCHEDULES & SPECIFICATIONS

REVISIONS:

DATE:	12/14/2011
DRAWN BY:	RAA
CHECKED BY:	DLB
SCALE:	NONE
PROJECT NO:	011175.00
SHEET	M4.1

Apr 23, 2012 - 2:04pm
P:\2011 Projects\011175.00 - RID Water Treatment\Mechanical\RID-92\As-Built\Site-92.dwg

ELECTRICAL DRAWING SPECIFICATION

1.0 GENERAL:

1.1. ALL ELECTRICAL WORK SHALL COMPLY WITH ALL APPLICABLE CITY, COUNTY, STATE, AND SERVING ELECTRICAL UTILITY CODES, ORDINANCES, RULES, AND REGULATIONS. THE ENTIRE INSTALLATION SHALL COMPLY WITH OR SURPASS THE REQUIREMENTS OF THE ADOPTED EDITION OF THE NATIONAL ELECTRICAL CODE.

1.2. THE COMPLETE INSTALLATION SHALL BE IN ACCORDANCE WITH THE A.D.A.A.G. (AMERICANS WITH DISABILITIES ACT ACCESSIBILITY GUIDELINES).

1.3. UNLESS SPECIFICALLY NOTED, ALL MATERIAL SHALL BE NEW, OF FIRST CLASS QUALITY, SHALL BE U.L. LISTED AND LABELED, AND FREE OF DEFECTS.

1.4. CONTRACTOR SHALL BE RESPONSIBLE FOR ANY LOSS OR DAMAGE CAUSED BY HIM OR HIS WORKMEN TO THE SITE AND EXISTING SYSTEMS DURING THE COURSE OF CONSTRUCTION. CONTRACTOR SHALL BE RESPONSIBLE FOR REPAIRING OR REPLACING SUCH LOSS OR DAMAGE AT NO ADDITIONAL COST TO THE OWNER.

1.5. DRAWINGS ARE DIAGRAMMATIC IN NATURE AND CANNOT SHOW EVERY CONNECTION. JUNCTION BOXES, WIRE, CONDUIT, ETC. THE CONTRACTOR SHALL BE RESPONSIBLE FOR PROVIDING A COMPLETE AND FUNCTIONAL ELECTRICAL SYSTEM.

1.6. ALL EXISTING CONDUIT RUNS ARE NOT SHOWN. VERIFY EXISTING CONDUIT LOCATIONS IN FIELD.

1.7. NO DESIGN CHANGES SHALL BE MADE TO THE ELECTRICAL SYSTEM WITHOUT THE PRIOR APPROVAL OF THE ELECTRICAL ENGINEER AND THE ELECTRICAL INSPECTOR.

2.0. SCOPE OF WORK:

2.1. FURNISH ALL MATERIALS, TOOLS AND LABOR AND PAY ALL PERMITS AND FEES REQUIRED FOR THE ELECTRICAL INSTALLATION UNLESS OTHERWISE NOTED ON PLANS. ALL PERMITS AND INSPECTIONS SHALL BE PROVIDED AS REQUIRED BY THE LOCAL CODE AUTHORITY.

2.2. THE CONTRACTOR SHALL VISIT THE SITE TO DETERMINE EXISTING CONDITIONS PRIOR TO SUBMITTING A BID.

2.3. THIS PROJECT CONSISTS OF DEMOLITION, REMODEL, AND NEW CONSTRUCTION IN THE NOTED AREAS, VERIFY WITH OWNER IN FIELD ALL DEMOLITION WORK PRIOR TO BID.

2.4. ALL CONDUIT AND CONDUCTORS REMOVED UNDER DEMOLITION WORK SHALL NOT BE REUSED.

2.5. UNLESS NOTED OTHERWISE UNDER THE PROJECTS GENERAL CONDITIONS, AT THE COMPLETION OF THIS PROJECT, TURN OVER TO OWNER'S REPRESENTATIVE ALL REMOVED DEVICES AND/OR EQUIPMENT.

2.6. WHERE IT IS IMPOSSIBLE TO REMOVE CONDUITS AS SHOWN ON DRAWINGS (SUCH AS BELOW OR EMBEDDED IN CONCRETE FLOOR SLAB), REMOVE CONDUCTORS, CUT, CAP, AND ABANDON CONDUIT BELOW FLOOR LINE.

2.7. THE CONTRACTOR SHALL VERIFY LOCATION OF ALL EXISTING SITE UTILITIES BEFORE DIGGING TRENCHES.

2.8. VERIFY AND COORDINATE THE FOLLOWING WITH THE MECHANICAL AND CONTROLS CONTRACTOR:

a)LOCATION OF EQUIPMENT; E.G. MOTORS, HEATERS, T-STATS, CONTROL PANELS, ETC.

b)EQUIPMENT ELEC CHARACTERISTICS; E.G. VOLTAGE, PHASE, HP, AMPS, CONTROL WIRING, ETC.

2.9. CONCEAL ALL CONDUIT WORK. WHERE THIS IS IMPOSSIBLE, CONTACT OWNER AND COORDINATE IN FIELD.

2.10. COORDINATE ALL POWER OUTAGES WITH THE OWNERS REPRESENTATIVE IN ADVANCE.

2.11. RESTORE ALL SURFACES THAT WERE DAMAGED (PAINTING, PATCHING, PLASTERING, ETC.,) DUE TO THE INSTALLATION OR REMOVAL OF ELECTRICAL ITEMS.

2.12. PANEL DESIGNATIONS SHOWN ON THESE DRAWINGS ARE GIVEN FOR CLARIFICATION OF CIRCUITING ONLY AND MAY NOT CORRESPOND TO THE DESIGNATIONS FOUND IN THE FIELD.

2.13. FOR EQUIPMENT BEING REMOVED OR REPLACED, THE ELECTRICAL CONTRACTOR SHALL DE-ENERGIZE THE EQUIPMENT AND MAKE IT SAFE PRIOR TO REMOVAL. COMPLY WITH OSHA REQUIREMENTS FOR LOCKING OUT AND TAGGING EQUIPMENT TO PREVENT INADVERTENT RE-ENERGIZING.

2.14. ELECTRICAL CONTRACTOR SHALL PROVIDE ALL NECESSARY POWER TRENCHING, BACKFILL, CONCRETE PADS FOR TRANSFORMER AND CONDUIT STUBS INTO TRENCH AS REQUIRED BY POWER CO. AND TO THEIR SPECIFICATIONS.

2.15. ACQUIRE TWO COMPLETE SETS OF CONTRACT DRAWINGS AND FURNISH SETS TO THE ELECTRICAL POWER UTILITIES FOR UTILITY DESIGN AND COORDINATION.

2.16. INCLUDE ALL CHARGES THAT MAY APPLY FROM THE POWER UTILITY COMPANIES. PROVIDE ALL WORK REQUIRED FOR THE INSTALLATION OF UTILITY SERVICES.

2.17. PRIMARY SERVICE FOR POWER WERE NOT CONFIRMED AT TIME OF PRINTING AND ARE SHOWN FOR ESTABLISHMENT OF A BASE PRICE ONLY.

2.18. FULLY GUARANTEE THE INSTALLATION FOR A PERIOD OF ONE YEAR FROM THE DATE OF FINAL ACCEPTANCE BY THE OWNER, AGAINST ANY IMPERFECT WORKMANSHIP AND MALFUNCTION OF EQUIPMENT. ANY WORK IDENTIFIED TO BE DEFECTIVE WITHIN THE GUARANTEE PERIOD SHALL BE PROMPTLY REPAIRED OR REPLACE AT NO ADDITIONAL COST THE THE OWNER.

3.0. SUBMITTALS:

3.1. PROVIDE A MINIMUM OF SIX (6) SETS OF SHOP DRAWINGS FOR THE FOLLOWING; LIGHTING FIXTURES, DISCONNECT SWITCHES, PANELBOARDS, STARTERS, SERVICE ENTRANCE EQUIPMENT. ALL SHOP DRAWING SUBMITTALS SHALL BE BOUND, LABELED, AND MARKED TO IDENTIFY EXACTLY WHICH ITEM SWILL BE PROVIDED. SUBMIT ALL SHOP DRAWINGS FOR REVIEW AT THE SAME TIME.

3.2. SUBMIT UTILITY COORDINATION DRAWINGS AS REQUIRED BY THE LOCAL UTILITIES.

4.0. SUBSTITUTIONS:

4.1. EQUIPMENT LISTED BY BRAND NAME OR CATALOG NUMBER SHALL BE INTERPRETED AS ESTABLISHING A STANDARD OF QUALITY. SUBSTITUTIONS WILL BE CONSIDERED IF A WRITTEN REQUEST IS SUBMITTED TO THE ARCHITECT/ENGINEER A MINIMUM OF EIGHT (8) DAYS PRIOR TO THE BID DATE. THE REQUEST SHALL INCLUDE THE FOLLOWING:

a)A STATEMENT DECLARING THAT THE EQUIPMENT PROPOSED IS EQUAL TO THAT SPECIFIED BY HAVING THE SAME PHYSICAL CHARACTERISTICS AND DIMENSIONS, AND WILL MEET THE DRAWING LAYOUT AND STRUCTURAL CONDITIONS.

b)THE SPECIFIED AND SUBMITTAL CATALOG NUMBERS OF THE EQUIPMENT UNDER CONSIDERATION.

c)AN EQUIPMENT CUT SHEET WITH DRAWING, DIMENSIONS AND SPECIFICATIONS.

d)SAMPLE MAY BE REQUIRED AT THE ENGINEERS DISCRETION.

4.2. ALL LIGHTING FIXTURES SUBMITTED FOR APPROVAL MUST HAVE THE INFORMATION AS DESCRIBED ABOVE, AS WELL AS THE FOLLOWING INFORMATION:

a)MANUFACTURE'S DATA SHOWING CATALOG NUMBERS.

b)CONSTRUCTION DETAILS.

c)PHOTOMETRIC OR ISOLUX CURVES.

d)TABLE OF COEFFICIENTS OF UTILIZATION.

e)RECOMMENDED MAINTENANCE FACTOR AND BRIGHTNESS READING.

f)FOOTCANDLE CALCULATIONS AS REQUESTED.

4.3. ANY CONFLICT ARISING FROM THE USE OF SUBSTITUTED MATERIAL SHALL BE THE RESPONSIBILITY OF THE CONTRACTOR, WHO SHALL BEAR ALL COSTS REQUIRED TO MAKE THE EQUIPMENT COMPLY WITH THE INTENT OF THE PLANS AND SPECIFICATIONS.

4.4. NO MATERIAL OR APPARATUS SHALL BE SUBSTITUTED AFTER THE BID OPENING UNLESS APPROVED IN WRITING BY THE ENGINEER.

4.5. MANUFACTURERS SHALL NOT BE CONSIDERED APPROVED AS EQUAL UNTIL LISTED IN A FORMAL ADDENDUM. LISTING AS EQUAL DOES NOT RELIEVE THE MANUFACTURER FROM MEETING THE REQUIREMENTS OF THE CONTRACT DOCUMENTS.

5.0. CONDUIT AND WIRE:

5.1. WHERE WIRING AND CONDUIT SIZES ARE INDICATED FOR HOMERUNS, THESE SIZES APPLY TO THE ENTIRE LENGTH FROM THE PROTECTIVE DEVICE IN THE PANEL TO THE EQUIPMENT OR LAST WIRING DEVICE.

5.2. SCHEDULE 40 PVC CONDUIT SHALL BE USED FOR ALL UNDERGROUND EXTERIOR CONDUIT, IN SLABS, BELOW SLAB ON GRADE AND IN CONCRETE OR MASONRY WALLS. ALL BENDS OVER 30 DEGREES SHALL BE MADE WITH WRAPPED INTERMEDIATE METAL CONDUIT. USE LONG SWEEP FITTINGS FOR ALL 90 DEGREE BENDS. ALL PLASTIC CONDUIT, EXCEPT THAT USED FOR COMMUNICATIONS, SHALL BE PROVIDED WITH A CODE SIZED EQUIPMENT GROUNDING CONDUCTOR. DO NOT USE PVC IN EXPOSED LOCATIONS.

5.3. ALL BELOW GRADE CONDUIT SHALL BE INSTALLED A MINIMUM OF 24 INCHES BELOW FINISHED GRADE. BELOW GRADE CONDUIT SHALL BE 3/4 INCH DIAMETER, MINIMUM.

5.4. ALL WIRING SHALL BE IN CONDUIT. RIGID OR INTERMEDIATE METALLIC CONDUIT (IMC) SHALL BE USED FOR ALL EXPOSED CONDUIT, WHERE SUBJECT TO MOISTURE, OR WHERE SUBJECT TO PHYSICAL DAMAGE.

5.5. FLEXIBLE METALLIC CONDUIT SHALL BE USED FOR ALL CONNECTIONS TO MOTORS, OR EQUIPMENT SUBJECT TO VIBRATION. LIQUID-TIGHT CONDUIT SHALL BE USED WHERE SUBJECT TO MOISTURE. BOND FLEXIBLE CONDUIT PER N.E.C. REQUIREMENTS.

5.6. INSTALL A PULL WIRE IN ALL EMPTY CONDUITS.

5.7. ALL CONDUCTORS SHALL BE COPPER. MINIMUM BRANCH CIRCUIT WIRING SHALL BE #12 AWG. OTHER SIZES AS INDICATED ON THE DRAWINGS OR AS REQUIRED BY CODE. INSULATION SHALL BE THHN/THWN FOR CONDUCTORS #6 AND SMALLER AND XHHW FOR #4 AND LARGER.

5.8. CIRCUIT NUMBERS ARE SHOWN FOR CIRCUIT IDENTIFICATION. CIRCUITING SHALL AGREE WITH NUMBERING ON THE PANEL SCHEDULE PROVIDED. BALANCE THE LOAD AS EVENLY AS POSSIBLE BETWEEN EACH PHASE LEG.

5.9. ALL SECONDARY SERVICES, FEEDERS AND BRANCH CIRCUIT CONDUCTORS SHALL BE COLOR CODED AS FOLLOWS:

208/120 VOLT	PHASE	480/277 VOLT
BLACK	A	BROWN
RED	B	ORANGE
BLUE	C	YELLOW
WHITE	NEUTRAL	GRAY
GREEN	GROUND	GREEN

5.10. CONTROL WIRES SHALL BE PURPLE OR VIOLET. ALL BRANCH CIRCUIT CONDUCTORS SHALL HAVE SOLID COLOR COMPOUND OR SOLID COLOR COATING. COORDINATE EXACT REQUIREMENTS WITH CONTROLS CONTRACTOR AND NOTIFY ENGINEER OF ANY DISCREPANCIES.

5.11. WRAP UNDERGROUND STEEL CONDUIT WITH HALF LAPPED SCOTCH #50 TAPE OR PROVIDE PVC COATED PIPE.

6.0. GROUNDING:

6.1. GROUNDING OF ELECTRICAL SERVICE AND EQUIPMENT SHALL BE PER THE APPLICABLE SECTIONS OF N.E.C. ARTICLE 250, AND AS SHOWN ON THE DRAWINGS.

6.2. PROVIDE AN INSULATED EQUIPMENT GROUNDING CONDUCTORS, IN ACCORDANCE WITH N.E.C. 250-122, IN ALL CONDUITS WITH CONDUCTORS.

7.0. NOT USED:

8.0. EQUIPMENT:

8.1. ALL ELECTRICAL COMPONENTS INSTALLED OUTDOORS, EXPOSED TO WEATHER OR IN DAMP LOCATIONS SHALL BE WEATHERPROOF, NEMA 3R.

8.2. THE SERVICE ENTRANCE ASSEMBLY AND ALL OF ITS COMPONENTS SHALL BE BRACED TO WITHSTAND A MINIMUM OF 100K OF AVAILABLE FAULT CURRENT SUPPLIED BY THE POWER COMPANY.

8.3. PROVIDE AT THE COMPLETION OF THE PROJECT NEATLY TYPED ACCURATE PANELBOARD DIRECTORIES INDICATING ALL BRANCH CIRCUITS AND SPARES. ALL SPARES SHALL BE LEFT IN THE OFF POSITION.

8.4. PROVIDE A 120 VOLT, 20 AMP, WEATHERPROOF GFCI RECEPTACLE WITHIN 25 FEET AND ACCESSIBLE TO ALL MECHANICAL EQUIPMENT.

8.5. LABEL ALL SERVICE ENTRANCE EQUIPMENT, PANELBOARDS AND MAJOR SINGLE LINE COMPONENTS WITHH PERMANENTLY AFFIXED PHENOLIC LETTERING (2" MINIMUM). LABEL ALL RECEPTACLES, DEVICES, JUNCTION BOXES, DISCONNECT SWITCHES, LUMINAIRES, ETC. WITH VINYL ADHESIVE TAPE INDICATING PANEL AND CIRCUIT NUMBER.

8.6. PANELBOARDS SHALL HAVE COPPER BUS, WITH FULL NEUTRAL AND GROUND BUSSES. MINIMUM AIC RATING SHALL BE 10,000 AMPS. PANELS SHALL HAVE LOCKING DOORS WITH MATCHING KEYS. PANELS SHALL BE MANUFACTURED BY SQUARE "D", GENERAL ELECTRIC, CUTLER HAMMER OR SIEMENS. LOAD CENTERS ARE NOT ACCEPTABLE.

8.7. ALL BRANCH CIRCUIT PANEL BOXES SHALL BE MINIMUM 5-3/4 INCHES DEEP AND 20 INCHES WIDE. PROVIDE MOUNTING HARDWARE IN ALL SPACES FOR FUTURE DEVICES.

8.8. ALL SAFETY SWITCHES SHALL BE HEAVY DUTY TYPE, WITH COVER INTERLOCK AND HANDLE LOCK OFF PROVISIONS. SWITCHES SHALL BE MANUFACTURED BY SQUARE "D", GENERAL ELECTRIC, CUTLER HAMMER OR SIEMENS. RATING AND FUSING SHALL BE AS SHOWN ON THE DRAWINGS. COORDINATE FUSING FOR SWITCHES SERVING MECHANICAL EQUIPMENT WITH MANUFACTURERS RECOMMENDED FUSE SIZE.

8.9. DRY TYPE TRANSFORMERS SHALL BE 60 HZ, WITH KVA RATINGS AS NOTED ON THE DRAWINGS. TRANSFORMERS SHALL BE TOTALLY ENCLOSED, EXCEPT FOR VENTILATION OPENINGS AND BE PROVIDED WITH WEATHER HOOD SUITABLE FOR OUTDOOR INSTALLATION. TRANSFORMERS SHALL HAVE A SHEET STEEL ENCLOSURE, AND CORE AND COIL ASSEMBLY SHALL BE ISOLATED FROM THE MOUNTING FRAME WITH VIBRATION ISOLATORS. PROVIDE SIX (6), 2-1/2% TAPS, FOUR (4) BELOW AND TWO (2) ABOVE NORMAL. INSTALL TRANSFORMER A MINIMUM OF 6 INCHES FROM ADJACENT WALLS OR STRUCTURES. TRANSFORMERS SHALL BE MANUFACTURED BY SQUARE "D", SIEMENS, GENERAL ELECTRIC, OR CUTLER HAMMER.

8.10. TIME CLOCKS SHALL MEET THE REQUIREMENTS OF THE 2006 IECC. PROVIDE WITH COMBINATION 7-DAY AND SEASONAL PROGRAM SCHEDULE AND MINIMUM 4 HOUR BATTERY BACK UP. INTERMATIC MODEL #ET7011SCR OR EQUAL.

9.0. WIRING DEVICES:

9.1. SWITCHES SHALL BE OF THE QUIET TYPE, SPECIFICATION GRADE, 20 AMP, 120/277 VOLT AC. HUBBELL 1221 (SINGLE POLE), 1223 (THREE-WAY). EQUAL BY LEVITON OR PASS & SEYMOUR.

9.2. RECEPTACLES, UNLESS NOTED OTHERWISE, SHALL BE DUPLEX, 120 VOLT, 20 AMP, GROUNDING TYPE, NEMA 5-20R. HUBBELL 5362, OR EQUAL BY LEVITON OR PASS & SEYMOUR.

9.3. PROVIDE ALL WIRING DEVICES WITH APPROPRIATE COVERPLATES. PROVIDE BLANK COVER PLATES FOR ALL EMPTY BOXES. COVERPLATES SHALL BE LEXAN, PLASTIC OR STAINLESS STEEL IN FINISHED AREA. GALVANIZED COVERPLATES MAY BE USED IN EQUIPMENT ROOMS.

ELECTRICAL ABBREVIATIONS AND SYMBOL SCHEDULE:

NOTE: NOT ALL SYMBOLS MAY BE USED ON THIS PROJECT. ALL MOUNTING HEIGHTS TO CENTER OF BOX, UNO. ALL DEVICES SHALL COMPLY WITH ADA REQUIREMENTS, WHERE APPLICABLE.

ABBREVIATIONS:

A	AMPERES
AC	ALTERNATING CURRENT
AF	AMPERES FRAME (RATING)
AFC	AVAILABLE FAULT CURRENT
AFG	ABOVE FINISHED GRADE
AFF	ABOVE FINISHED FLOOR
AHU	AIR HANDLING UNIT
AIC	AMPERES INTERRUPTING CAPACITY
AL	ALUMINUM
AT	AMPERES TRIP (SETTING)
AUX	AUXILIARY
BRKR	BREAKER
C	CONDUIT
CB	CIRCUIT BREAKER
CKT	CIRCUIT
COMB	COMBINATION
COMM	COMMUNICATIONS
CP	CONTROL PANEL
CPT	CONTROL POWER TRANSFORMER
CT	CURRENT TRANSFORMER
CU	COPPER
DC	DIRECT CURRENT
DISC	DISCONNECT
DP	POWER DISTRIBUTION PANEL
DWG	DRAWING
EC	ELECTRICAL CONTRACTOR
EDF	ELECTRIC DRINKING FOUNTAIN
EF	EXHAUST FAN
EG	EQUIPMENT GROUND
ELEC	ELECTRICAL – ELECTRIC
EM	EMERGENCY
EMT	ELECTRICAL METALLIC TUBING
EO	ELECTRICALLY OPERATED
F	FUSE
FA	FIRE ALARM
FAAP	FIRE ALARM ANNUNCIATE PANEL
FACP	FIRE ALARM CONTROL PANEL
FSD	FIRE SMOKE DAMPER
FDR	FEEDER
FLA	FULL LOAD AMPERES
FLEX	FLEXIBLE
GFCI	GROUND FAULT CIRCUIT INTERRUPTER
GND	GROUND
HID	HIGH INTENSITY DISCHARGE
HP	HORSE POWER
HOA	HAND-OFF-AUTO
JB	JUNCTION BOX
KV	KILOVOLTS
KVA	KILOVOLTS-AMPERES
KW	KILOWATTS
LTG	LIGHTING
MBJ	MAIN BONDING JUMPER
MC	MECHANICAL CONTRACTOR
MCA	MINIMUM CIRCUIT AMPACITY
MCC	MOTOR CONTROL CENTER
MECH	MECHANICAL
MH	MANHOLE
MISC	MISCELLANEOUS
MTD	MOUNTED
MTG	MOUNTING
NC	NORMALLY CLOSED
NEC	NATIONAL ELECTRICAL CODE
NEU	NEUTRAL
NF	NON-FUSED
NIC	NOT IN CONTRACT
NL	NIGHT LIGHT
NO	NORMALLY OPEN
NTS	NOT TO SCALE
OL'S	OVERLOADS
P	POLE
PA	PUBLIC ADDRESS
PB	PUSH BUTTON
PH	PHASE
PNL	PANEL
PT	POTENTIAL TRANSFORMER
PWR	POWER
RECP	RECEPTACLE
RLA	RUNNING LOAD AMPERES
RSC	RIGID STEEL CONDUIT
RTU	ROOF TOP UNIT
SCHED	SCHEDULE
SES	SERVICE ENTRANCE SECTION
SS	SPECIAL SYSTEMS
SWBD	SWITCHBOARD
TMB	TELEPHONE MOUNTING BOARD
TYP	TYPICAL
UNO	UNLESS NOTED OTHERWISE
V	VOLTS
VP	VANDAL PROOF
W	WIRE
WG	WIRE GUARD
WH	WATER HEATER
WP	WEATHER PROOF (WHILE IN USE)

GENERAL SYMBOLS:

- RECESSED OR SURFACE JUNCTION BOX IN ACCESSIBLE LOCATION WITH FLEXIBLE CONDUIT CONNECTION.
- MOTOR, HP, VOLTAGE, & PHASE AS INDICATED MECH EQUIP SCHEDULE.
- ELECTRICAL PANELBOARD, 480/277V, 3PH, 4W, WITH GND, UNO. FLUSH/SURFACE MOUNT AT +6'-0" AFF TO TOP. STUB OUT THREE 3/4"C INTO ACCESSIBLE CEILING SPACE.
- ELECTRICAL PANELBOARD, 208/120V, 3PH, 4W, WITH GND, UNO. FLUSH/SURFACE MOUNT AT +6'-0" AFF TO TOP. STUB OUT THREE 3/4"C INTO ACCESSIBLE CEILING SPACE.
- KVA TRANSFORMER, TYPE AND RATING AS SPECIFIED ON PLAN.
- SERVICE ENTRANCE SECTION, DISTRIBUTION PANELBOARD, OR MOTOR CONTROL CENTER, AS SPECIFIED ON PLAN.
- CONDUIT CONCEALED IN FINISHED AREAS OR ABOVE CEILING SPACE.
- UNDERGROUND CONDUIT OR CONCEALED IN CONCRETE OR BELOW FLOOR AS NOTED.
- CONDUIT TURNING UP
- CONDUIT TURNING DOWN
- CONDUIT STUB OUT, AS NOTED ON PLANS
- HOME RUN TO PANELBOARD OR AS NOTED. ALL CONDUCTORS SHALL BE COPPER & HAVE CODE SIZED GROUNDING CONDUCTORS. MINIMUM BRANCH CIRCUIT WIRING SHALL BE #12 AWG. OTHER SIZES AS INDICATED ON THE DRAWINGS, ELECTRICAL SCHEDULES, OR AS REQUIRED BY CODE. INSULATION SHALL BE THHN/THWN FOR CONDUCTORS #6 AND SMALLER AND XHHW FOR #4 AND LARGER.

SINGLE LINE DIAGRAM SYMBOLS:

- LSIG LONG-TIME/SHORT-TIME/INSTANTANEOUS/GROUND FAULT TRIP SETTINGS
- CIRCUIT BREAKER
- FUSIBLE SWITCH, SIZE AS INDICATED ON PLANS
- MOTOR STARTER, # INDICATES NEMA SIZE
- 480V DRAW-OUT CIRCUIT BREAKER
- DRAW-OUT FUSE
- COMBINATION MOTOR CONTROLLER, FUSIBLE SWITCH TYPE
- COMBINATION MOTOR CONTROLLER, CIRCUIT BREAKER TYPE
- GROUND
- METER
- GFP GROUND FAULT PROTECTION
- CURRENT TRANSFORMER
- DPM DIGITAL POWER METER
- DISTRIBUTION TRANSFORMER
- DELTA CONNECTION
- WYE CONNECTION WITH GROUND
- FEED THROUGH LUG CONNECTION
- ELECTRICAL PANEL BOARD, MAIN LUG ONLY
- ELECTRICAL PANEL BOARD, MAIN CIRCUIT BREAKER

CONTROLS SYMBOLS:

NOTE: PROVIDE NEMA 3R ENCLOSURE IN EXTERIOR APPLICATIONS.

- $ SINGLE POLE TOGGLE SWITCH MTD AT +48" AFF
- $K SINGLE POLE KEY OPERATED SWITCH MTD AT +48" AFF
- $M HP RATED MANUAL MOTOR STARTER WITH SWITCH CONTROL & THERMAL OVERLOAD PROTECTION.
- MOTOR CONTROLLER. FURNISHED WITH EQUIPMENT.
- MOTOR CONTROLLER. FURNISHED BY ELECTRICAL CONTRACTOR.
- HEAVY DUTY SAFETY DISCONNECT SWITCH, 250V-30A-3P, UNO. HP RATED, REFER TO EQUIP SCHEDULE(S) FOR FUSES AND OTHER SPECIFICATIONS
- COMBINATION MOTOR STARTER/DISCONNECT SWITCH, FUSIBLE WITH 120V CONTROL TRANSFORMER, HOA SWITCH, AND PILOT LIGHT IN ENCLOSURE. FUSE PER EQUIPMENT MANUFACTURER'S RECOMMENDATIONS OR EQUIP SCHEDULE SPECIFICATIONS. SUBSCRIPT INDICATES STARTER SIZE.
- VFD VARIABLE FREQUENCY DRIVE. FURNISHED BY MECHANICAL CONTRACTOR, INSTALLED BY ELECTRICAL CONTRACTOR.
- TS TIME SWITCH
- PC PHOTOCELL. ROOF MOUNTED, UNO

POWER SYMBOLS:

NOTE: WEATHER PROOF WHERE OUTSIDE MTD AT +72" AFG, UNO

- SPECIAL PURPOSE RECEPTACLE, 250V-400V, NEMA CONFIG & MTG HEIGHT AS SPECIFIED ON EQUIP SCHEDULE OR AS REQUIRED FOR INTENDED USE.
- DUPLEX RECEPTACLE, 20A-2P-3W, NEMA 5-20R, MTD AT +16" AFF, UNO
- DOUBLE DUPLEX RECEPTACLE, (2) 20A-2P-3W, NEMA 5-20R
- SINGLE RECEPTACLE, 30A-2P-3W, NEMA 5-30R MTD AT +16" AFF, UNO
- SINGLE, DUPLEX, OR DBL-DUPLEX RECP W/SWITCHED LEG MTD AT +16", UNO

LIGHTING SYMBOLS:

NOTE: REFER TO LIGHTING FIXTURE SCHEDULE FOR LUMINAIRE SPECIFICATIONS.
NOTE: SUBSCRIPT INDICATES LUMINAIRE TYPE.

- DOUBLE OR SINGLE ARM POLE MTD AREA LIGHT WITH CONCRETE BASE
- BOLLARD OR POST MTD AREA LIGHT
- SURFACE CEILING MTD INCANDESCENT, FLUORESCENT, OR HID FIXTURE
- SURFACE WALL MTD INCANDESCENT, FLUORESCENT, OR HID FIXTURE

GENERAL PROJECT NOTES:

A. ALL WORK TO BE PERFORMED IN ACCORDANCE WITH THE N.E.C. AND ALL APPLICABLE LOCAL CODES AND ORDINANCES.

B. ALL CONTRACTORS SHALL VERIFY LOCATION OF ALL EXISTING SITE UTILITIES BEFORE DIGGING TRENCHES.

C. THE ELECTRICAL CONTRACTOR SHALL VERIFY REQUIREMENTS FOR EQUIPMENT FURNISHED BY OTHERS TO BE CONNECTED TO THE THE ELECTRICAL SYSTEM. THE ELECTRICAL CONTRACTOR SHALL PROVIDE ALL MATERIALS NECESSARY, SUCH AS WIRE, CONDUIT, FUSE, TRANSFORMERS, ETC. FOR PROPER INSTALLATION AND ELECTRICAL OPERATION OF SUCH EQUIPMENT.

D. ELECTRICAL CONTRACTOR SHALL CONTACT THE ENGINEERS OFFICE IN WRITING WITH A REQUEST FOR INFORMATION (RFI) PRIOR TO PROCEEDING WITH ANY WORK NOT CLEARLY SHOWN IN DOCUMENTS HEREIN. ENGINEER WILL NOT ASSUME RESPONSIBILITY FOR WORK NOT AUTHORIZED TO CHANGES TO CONTRACT DOCUMENTS.

OBSERVATION SCHEDULE:

1. CONTACT THE ENGINEER 48 HOURS PRIOR TO SCHEDULING AN OBSERVATION FOR ANY INSPECTION BY THE LOCAL JURISDICTION. THE ENGINEER, OR HIS REPRESENTATIVE SHALL VERIFY COMPLIANCE WITH THESE DOCUMENTS. ANY WORK THAT DOES NOT COMPLY WITH THESE DOCUMENTS SHALL BE CORRECTED BY THE ELECTRICAL CONTRACTORS EXPENSE.

2. PUNCH WALK-THROUGH, AFTER ENERGIZING ALL EQUIPMENT.

REFERENCE SYMBOLS

- EQP / # — MECH EQUIP IDENTIFICATION REFER TO EQUIP SCHED FOR ELECTRICAL REQUIREMENTS; EQUIPMENT TAG NUMBER
- # — FEEDER IDENTIFICATION REFER TO FEEDER SCHED FOR CONDUCTOR DETAILS
- f# — AVAIL FAULT CURRENT IDENTIFICATION REFER TO AFC TABLE FOR FURTHER DETAILS

SHEET INDEX

E0.0	ELECTRICAL ABBREVIATIONS AND SYMBOLS
E0.1	ELECTRICAL SITE PLAN – DEMOLITION WORK
E0.2	PHOTOMETRIC SITE PLAN
E1.0	SINGLE-LINE DIAGRAM, PANELS, AND CALCULATIONS
E2.0	ELECTRICAL SITE PLAN – NEW WORK

RECORD DRAWING
(4/23/2012)

THIS IS PART OF A RECORD DOCUMENT. RECORD DOCUMENTS ARE BASED ON REPORTS SUBMITTED BY OTHERS. ENGINEER CANNOT ASSURE NOR ASSUME ANY RESPONSIBILITY OR LIABILITY FOR THE ACCURACY OF RECORD DOCUMENTS. USERS OF RECORD DOCUMENTS ARE CAUTIONED AND ADVISED TO OBTAIN INDEPENDENT VERIFICATION OF ACTUAL CONDITIONS.

This is a instrument of service only and is the property of Taylor RyMar Corporation. Taylor RyMar Corporation, its reproduction or other use shall be made by any person or firm other than Taylor RyMar Corporation, without the express written permission of Taylor RyMar Corporation. Any reproduction or use shall void the engineer's seal and signature hereon and so prohibited responsibility will result. Copyright 2008 Taylor RyMar Corporation.

TAYLOR RYMAR CORPORATION
60 EAST RIO SALADO PARKWAY
SUITE 1100
TEMPE, AZ 85281
PH: 480.951.0517 FAX:480.951.2353
WWW.TR-CORP.COM

ROOSEVELT IRRIGATION DISTRICT #92
WATER TREATMENT INSTALLATION
43RD AVENUE, 1/4 MI. NORTH OF BUCKEYE, PHOENIX, ARIZONA
Sheet Title:
ELECTRICAL SPECIFICATIONS AND SYMBOLS LIST

REVISIONS:

DATE:	12/14/2011
DRAWN BY:	CRL
CHECKED BY:	JDD
SCALE:	AS NOTED
PROJECT NO:	011175.00
SHEET	E0.0

Apr 24, 2012 – 11:33am
\\TRCFNP\Project Files\2011 Projects\011175.00 – RID Water Treatment\Electrical\RID-92\As-built\Electrical Drawings – 92.dwg

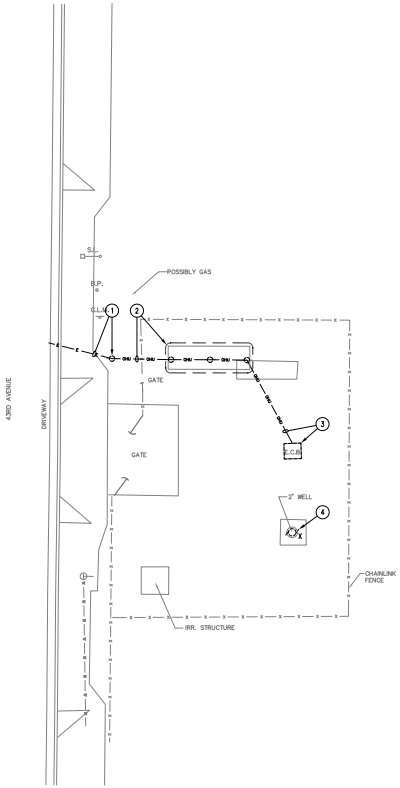

ELECTRICAL SITE PLAN – DEMOLITION WORK

1" = 10'-0"

DEMOLITION NOTES:

A. FOR EQUIPMENT BEING REMOVED OR REPLACED, THE ELECTRICAL CONTRACTOR SHALL DE-ENERGIZE THE EQUIPMENT AND MAKE IT SAFE PRIOR TO REMOVAL. COMPLY WITH OSHA REQUIREMENTS FOR LOCKING OUT AND TAGGING EQUIPMENT TO PREVENT INADVERTENT RE-ENERGIZING.

B. VERIFY CIRCUIT, DEVICES, AND EQUIPMENT SCHEDULED FOR REMOVAL TO ASSURE THAT THEIR REMOVAL WILL NOT ADVERSELY AFFECT ADJACENT AREAS NOT BEING RENOVATED.

C. ELECTRICAL SUBCONTRACTOR SHALL MAINTAIN POWER TO ALL CIRCUIT ADJACENT TO THE CONSTRUCTION AREA. THIS SHALL INCLUDE ANY CIRCUITS PASSING THROUGH THE CONSTRUCTION AREA OR CIRCUITS BEING POWERED FROM POWER PANELS WITHIN THE CONSTRUCTION AREA. EXTEND AND RELOCATE THESE CIRCUITS AS REQUIRED TO MAINTAIN SERVICE AND TO AVOID INTERFERENCE WITH THE NEW WORK. SUBCONTRACTOR SHALL NOTIFY GENERAL CONTRACTORS, SHOULD IT BE NECESSARY TO INTERRUPT POWER TO AREAS ADJACENT TO THIS CONSTRUCTION AREA.

D. DEMOLITION WORK MUST FOLLOW THE CONSTRUCTION PHASING SEQUENCE AND MUST BE COORDINATED WITH GENERAL AND MECHANICAL DRAWINGS AND CONTRACTORS.

E. DEFINITION – THE TERM "CIRCUIT" IN ITS ENTIRETY, SHALL MEAN CONDUIT, FITTINGS, SUPPORTS, JUNCTION BOXES, CONDUCTORS BACK TO THE RESPECTIVE PANEL BOARD (POWER SOURCE); OR TO THE LAST JUNCTION BOX OR DEVICE IF THE REMAINING PORTION OF THE CIRCUIT SERVES EXISTING EQUIPMENT OR AREAS WHICH SHALL REMAIN.

F. ELECTRICAL SUBCONTRACTOR SHALL VERIFY ALL LIGHTING CIRCUITS WITHIN THE CONSTRUCTION AREA BEFORE DISCONNECTING POWER. CONTRACTOR SHALL PROVIDE NECESSARY WIRING TO MAINTAIN LIGHTING IN AREAS ADJACENT TO THIS CONSTRUCTION AREA WHICH WOULD BE AFFECTED BY THIS DEMOLITION WORK.

G. ALL DEVICES, JUNCTION BOXES, CIRCUIT NUMBERS, EQUIPMENT SIZES, AND CONDUIT SHOWN ARE FOR REFERENCE ONLY AND MAY NOT INDICATE CORRECT IDENTIFICATION, AND SIZE; AND TOTAL QUANTITIES OF ITEMS SCHEDULED FOR DEMOLITION. VISIT SITE AND FIELD VERIFY THE NUMBER OF DEVICES WITHIN THE CONSTRUCTION PHASE AREA PRIOR TO THE BID AND REMOVAL. REMOVE ALL DEVICES, EQUIPMENT, MATERIAL, AND CIRCUITS IN THEIR ENTIRETY, WHICH INTERFERE WITH THE NEW CONSTRUCTION AND NOT SHOWN ON DRAWINGS AS DIRECTED BY THE ARCHITECT / GENERAL CONTRACTOR.

H. DISPOSAL AND/OR SALVAGING OF MATERIAL AND EQUIPMENT SHALL BE AS DIRECTED BY OWNER / GENERAL CONTRACTOR.

J. ALL OVER-HEAD AND UNDER-GROUND ELECTRICAL, TELEPHONE AND CABLE UTILITIES SHOWN ON THIS SHEET ARE EXISTING TO BE REMOVED AFTER ALL NEW WORK SHOWN ON SHEET E1.0 IS COMPLETED, UNLESS NOTED OTHERWISE. COORDINATE ALL WORK AND COMPLY WITH ALL STIPULATIONS SET BY SERVING UTILITY COMPANY.

K. FIXTURE / ITEM IDENTIFIED WITH LETTER:
   "X" – INDICATES DEVICE TO REMAIN.
   "NW" – INDICATES DEVICE TO BE REMOVED.
   "WRR" – INDICATES DEVICE TO BE REMOVED & RELOCATED.

KEY NOTES:

1. EXISTING POWER POLE WITH EXISTING OVER-HEAD POWER UTILITY LINES TO REMAIN. SEE SHEET E2.0 FOR RE-ROUTING OF OVER-HEAD UTILITY POWER LINES FROM THIS POINT TO NEW PROPOSED POWER POLE WITHIN THE PROPERTY LINE.
2. EXISTING WOOD H-FRAME MOUNTED TRANSFORMER BANK WITH EXISTING OVER-HEAD POWER UTILITY LINES TO BE REMOVED. COORDINATE COMPLETE REMOVAL REQUIREMENTS WITH KELLER ELECTRICAL AND POWER COMPANY.
3. EXISTING SERVICE ENTRANCE SECTION WITH EXISTING OVER-HEAD POWER UTILITY LINES TO BE REMOVED COMPLETELY. COORDINATE COMPLETE REMOVAL REQUIREMENTS WITH POWER COMPANY.
4. EXISTING WELL PUMP TO REMAIN. DEMO EXISTING CIRCUITING FROM EXISTING SES BEING REMOVED AND RE-CONNECT TO NEW SERVICE ENTRANCE SECTION. SEE SHEETS E1.0 AND E2.0 FOR NEW CONNECTION REQUIREMENTS.

RECORD DRAWING
(4/23/2012)

THIS IS PART OF A RECORD DOCUMENT. RECORD DOCUMENTS ARE BASED ON REPORTS SUBMITTED BY OTHERS. ENGINEER CANNOT ASSURE NOR ASSUME ANY RESPONSIBILITY OR LIABILITY FOR THE ACCURACY OF RECORD DOCUMENTS. USERS OF RECORD DOCUMENTS ARE CAUTIONED AND ADVISED TO OBTAIN INDEPENDENT VERIFICATION OF ACTUAL CONDITIONS.

This is a instrument of service only and is the property of Taylor Ryman Corporation. Taylor Ryman Corporation. No reproduction or other use shall be made by any person or firm other than Taylor Ryman Corporation, without the express written permission of Taylor Ryman Corporation. Unauthorized use shall void the engineer's seal and signature hereon and so professional responsibility will remain. Copyright 2008 Taylor Ryman Corporation.

TAYLOR RYMAR
CORPORATION
60 EAST RIO SALADO PARKWAY
SUITE 1010
TEMPE, AZ 85281
PH: 480.951.0517 FAX:480.951.2353
WWW.TR-CORP.COM

ROOSEVELT IRRIGATION DISTRICT #92
WATER TREATMENT INSTALLATION
43RD AVENUE, 1/4 MI. NORTH OF BUCKEYE, PHOENIX, ARIZONA
Sheet Title:
ELECTRICAL SITE PLAN – DEMOLITION WORK

REVISIONS:

DATE:	12/14/2011
DRAWN BY:	CRL
CHECKED BY:	JOD
SCALE:	AS NOTED
PROJECT NO:	011175.00
SHEET	E0.1

Apr 24, 2012 – 10:07am
\\TRCFNP\Project Files\2011 Projects\011175.00 – RID Water Treatment\Electrical\RID-92\As-built\Electrical Drawings – 92.dwg

Calculation Summary							
Label	CalcType	Units	Avg	Max	Min	Avg/Min	Max/Min
PROPERTY LINE	Illuminance	Fc	0.10	0.2	0.0	N.A.	N.A.
SITE	Illuminance	Fc	0.60	3.4	0.0	N.A.	N.A.

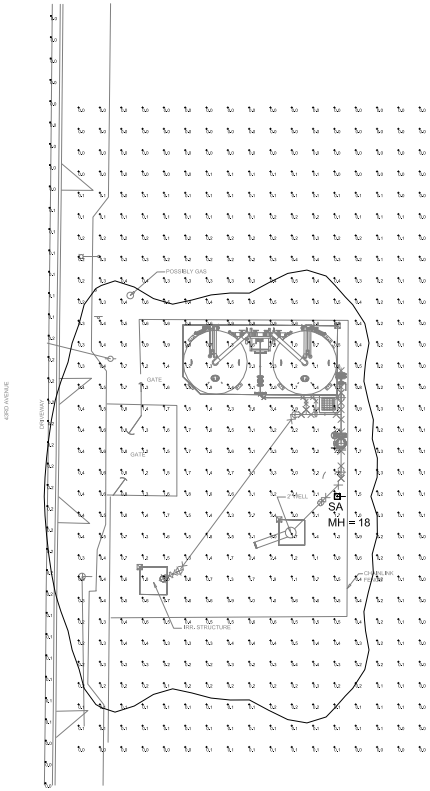

GENERAL NOTES:

A. ALL EXTERIOR LIGHT FIXTURES TO COMPLY WITH LOCAL NIGHT SKY ORDINANCE.

B. ALL EXTERIOR ELECTRICAL EQUIPMENT TO BE RATED FOR WEATHER-PROOF/ NEMA-3R APPLICATIONS.

C. ALL FIXTURES INSTALLED OUTDOORS SHALL BE RATED FOR DAMP/WET LOCATIONS AS REQUIRED. THE CONTRACTOR SHALL COORDINATE DAMP/WET LOCATION RATING PER NEC ARTICLE 410-4. ALL INSTALLATIONS SHALL CONFORM TO NEC ARTICLE 410, ALL SUB ARTICLES.

D. CONTRACTOR TO COORDINATE EXACT SITE LIGHTING FIXTURE LOCATIONS WITH OWNER. ALL CONFLICTS SHALL BE IMMEDIATELY REPORTED TO THE ENGINEER AND ARCHITECT.

E. ALL EXTERNAL LIGHTING SHALL BE SO LOCATED AND DESIGNED TO PREVENT LIGHTING RAYS FROM BEING DIRECTED OFF THE PROPERTY UPON WHICH THE LIGHTING IS LOCATED.

F. REFER TO LIGHTING FIXTURE SCHEDULE ON SHEET E2.0 FOR LIGHT FIXTURE TYPES AND SPECIFICATIONS.

PHOTOMETRIC SITE PLAN

1" = 10'-0"

RECORD DRAWING
(4/23/2012)

THIS IS PART OF A RECORD DOCUMENT. RECORD DOCUMENTS ARE BASED ON REPORTS SUBMITTED BY OTHERS. ENGINEER CANNOT ASSURE NOR ASSUME ANY RESPONSIBILITY OR LIABILITY FOR THE ACCURACY OF RECORD DOCUMENTS. USERS OF RECORD DOCUMENTS ARE CAUTIONED AND ADVISED TO OBTAIN INDEPENDENT VERIFICATION OF ACTUAL CONDITIONS.

This is a instrument of service only and is the property of Taylor Ryder Corporation. Taylor Ryder Corporation. No reproduction or other use shall be made by any person or firm other than Taylor Ryder Corporation, without the express written permission of Taylor Ryder Corporation. Unauthorized use shall void the engineer's seal and signature hereon and no professional responsibility will result. Copyright 2008 Taylor Ryder Corporation.

TAYLOR RYMAR
CORPORATION
60 EAST RIO SALADO PARKWAY
SUITE 1010
TEMPE, AZ 85281
PH: 480.951.0517 FAX:480.951.2353
WWW.TR-CORP.COM

ROOSEVELT IRRIGATION DISTRICT #92
WATER TREATMENT INSTALLATION
43RD AVENUE, 1/4 MI. NORTH OF BUCKEYE, PHOENIX, ARIZONA
Sheet Title: PHOTOMETRIC SITE PLAN

REVISIONS:

DATE:	12/14/2011
DRAWN BY:	CRL
CHECKED BY:	JOD
SCALE:	AS NOTED
PROJECT NO:	011175.00
SHEET	E0.2

Apr 24, 2012 - 10:05am
\\TRCFNP\Project Files\2011 Projects\011175.00 - RID Water Treatment\Electrical\RID-92\As-built\Electrical Drawings - 92.dwg

PANEL "P92" (NEW)			BOLT-ON						100 AMP SECONDARY MAIN CIRCUIT BREAKER	
240/120V 1ø 3W			INTEGRAL TO SES						70A PRIMARY MAIN CIRCUIT BREAKER (25K AIC)	
USE OR AREA SERVED	CB	LOAD TYPE	LOAD PER PHASE (VA) A#	B#			LOAD TYPE	CB	USE OR AREA SERVED
SPARE	30	C	1				N	30	SPARE
						2			
		N	3				N		
						4		2	
SPARE	20	N	5				N	25	SPARE
						6			
		N	7				N		
	2					8		2	
SPARE	30	N	9				N	30	SPARE
	1					10		1	
VERTECH CONTROL PANEL	20	N	11		1200		N	20	CONVENIENCE RECEPTACLE
	1				180	12		1	
TANK SKID SUMP PUMP	20	N	13	864			C	20	SECURITY POLE LIGHTS
	1			185		14		1	
SPARE	20	N	15				N	20	TIMECLOCK/CONTACTOR
	1				180	16		1	
SPARE	20	N	17				N	20	SPARE
	1					18		1	
SPARE	20	N	19				N	20	SPARE
	1					20		1	
SPARE	15	N	21				N	15	SPARE
	1					22		1	
BUSSED SPACE		N	23				N		BUSSED SPACE
						24			
BUSSED SPACE		N	25				N		BUSSED SPACE
						26			
BUSSED SPACE		N	27				N		BUSSED SPACE
						28			
BUSSED SPACE		N	29				N		BUSSED SPACE
						30			
LOAD PER PHASE NON-CONTINUOUS			864	1560			1560 VA / 120 V = 13 AMPS		
LOAD PER PHASE CONTINUOUS			185	0					
25% OF CONTINUOUS			46	0					
–			0	0			TOTAL KVA=		2655 VA
TOTAL			1095	1560			10,000		A.I.C. BRANCH BREAKERS

NOTES: 1. "C" LOAD TYPES ARE CONTINUOUS OR LARGEST MOTOR LOADS AND "N" LOAD TYPES ARE NON-CONTINUOUS.

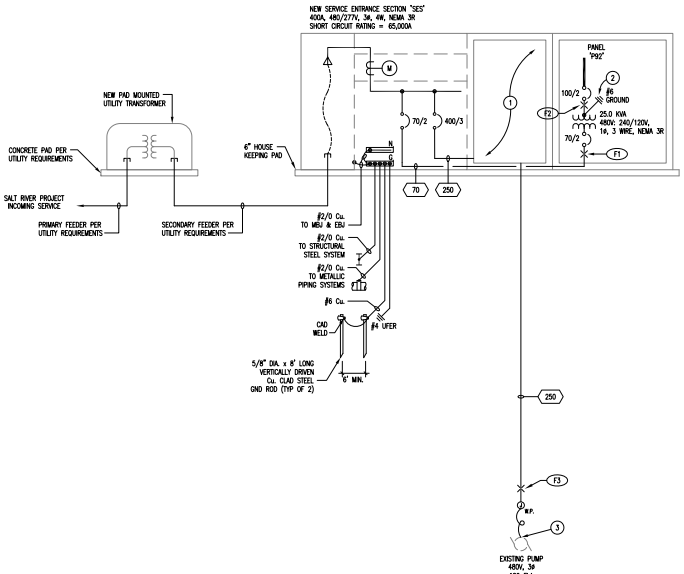

ELECTRICAL SINGLE-LINE DIAGRAM

NO SCALE

GENERAL NOTES:

A. CONDUCTOR SIZES BASED ON THHN/XHHW-2, 90° C, 600V, INSULATED, COPPER WIRE APPLIED AT 60° C AMPACITIES SIZES UP TO #1 AWG, AND 75° C, AMPACITIES FOR SIZES #1 AWG OR LARGER.

B. NO DESIGN CHANGES MAY BE MADE TO THE SYSTEM WITHOUT THE PRIOR APPROVAL OF THE DESIGN ENGINEER AND THE ELECTRICAL INSPECTOR.

C. DASHED-SHADED LINES INDICATE EXISTING EQUIPMENT. SOLID-BOLD LINES INDICATE NEW EQUIPMENT U.N.O.

KEY NOTES:

1. NEW SES PUMP CONTROL CABINET WITH CONTACTORS AND REDUCED VOLTAGE STARTING CONTROLS FOR EXISTING IRRIGATION PUMP MOTOR TO BE DESIGNED BY KELLER ELECTRICAL. BLANK CONTROL CABINET TO BE PROVIDED WITH SES. VERIFY CONTROL CABINET SIZE AND KNOCK-OUT REQUIREMENTS WITH KELLER ELECTRICAL. COORDINATE WITH KELLER ELECTRICAL AND VERTECH CONTROLS DRAWINGS FOR CONTROL PROVISION REQUIREMENTS BY ELECTRICAL CONTRACTOR.

2. TIE TO NEW SES GROUNDING ELECTRODE SYSTEM.

3. EXISTING WELL PUMP TO BE RE-CONNECTED TO NEW SERVICE ENTRANCE SECTION. SEE SHEETS E2.0 FOR ADDITIONAL INFORMATION.

FEEDER SCHEDULE:

SYMBOL	PARALLEL SETS	CONDUIT AND CONDUCTOR SIZE	NOTE:
70	1	2 #4, 1 #8 GND	
250	1	3 #250KCM, 1 #4 GND, 2-1/2"C	

LOAD CALCULATIONS:

SES, 400A, 480/277V, 3PH, 4W

NEW PANEL "P92"		x 100% =	2655 VA
EXISTING 150HP 480V-3PH WELL PUMP		x 125% =	186975 VA
		SUB TOTAL =	189630 VA
	189630 VA	AT 480V 3 PHASE =	228 AMPS

AVAILABLE FAULT CURRENT:

1. ALL VALUES ARE SYMMETRICAL BASED ON BUSSMANN SPD CALCULATIONS AS INDICATED.
2. ALL EQUIPMENT SHALL BE FULLY RATED.
3. AFC = AVAILABLE FAULT CURRENT.

LABEL	FAULT LOCATION	TYPE OF CALCULATION	Cable	Conduit Type	Conductor Type	AFC(1) or AFC(PRI)	V or V(PRI)	V(SEC)	L	C VALUE	KVA	%Z	N	f or f1	M or M1	AFC(2) or AFC(SEC)
F1	XFMR PRIMARY	AFC AT END OF A FEEDER	#4	NON-MAGNETIC	COPPER	65000	480		15	3625			1	1.0621	0.4849	31521
F2	XFMR SECONDARY	AFC AT SEC. OF 1-PHASE XFMR				31521	480	240			25	3.3		34.5515	0.0281	1773

AFC AT THE END OF A FEEDER

DEFINITIONS
AFC(1) = AFC AT THE BEGINNING OF THE FEEDER
AFC(2) = AFC AT THE END OF THE FEEDER
N = NUMBER OF CONDUCTORS IN PARALLEL PER PHASE
C = "C" VALUE AS DEFINED IN THE BUSSMANN SPD HANDBOOK
V = LINE-TO-LINE VOLTAGE
L = LENGTH OF FEEDER (IN FEET)

CALCULATIONS

$$F = \frac{3.732 \times L \times AFC(1)}{N \times C \times V}$$

$$M = \frac{1}{1+F}$$

$$AFC(2) = AFC(1) \times M$$

AFC AT THE SECONDARY OF A THREE PHASE TRANSFORMER

DEFINITIONS
AFC(PRI) = AFC AT PRIMARY TERMINALS OF TRANSFORMER
AFC(SEC) = AFC AT SECONDARY TERMINALS OF TRANSFORMER
V(PRI) = LINE-TO-LINE VOLTAGE AT TRANSFORMER PRIMARY
%Z = TRANSFORMER PERCENT IMPEDANCE
KVA = RATED KVA OF TRANSFORMER

CALCULATIONS

$$f1 = \frac{AFC(PRI) \times V(PRI) \times 1.73 \times \%Z}{100,000 \times KVA}$$

$$M1 = \frac{1}{1+f1}$$

$$AFC(SEC) = \frac{V\ PRIMARY}{V\ SECONDARY} \times M1 \times AFC(1)$$

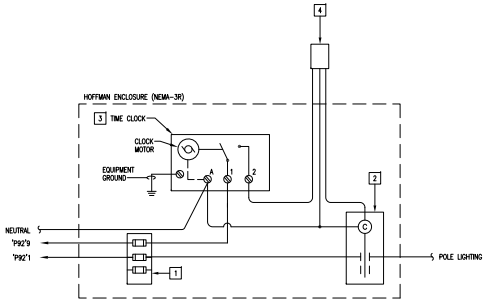

KEY NOTES:

1. FUSE BLOCK WITH 20A CURRENT LIMITING CLASS J DUAL ELEMENT TIME DELAY FUSES.
2. 2 POLE ELECTRICALLY HELD CONTACTOR, SQUARE 'D' LC20A02 OR EQUAL WITH 30A CONTACTS, 5000A WITHSTAND RATING MINIMUM.
3. TIMECLOCK "INTERMATIC" MODEL #ET70115CR OR EQUAL.
4. PHOTOCELL "INTERMATIC" #K4236 MOUNT ON ROOF FACING NORTH.

EXTERIOR LIGHTING CONTROL DIAGRAM

NO SCALE

RECORD DRAWING
(4/23/2012)

THIS IS PART OF A RECORD DOCUMENT. RECORD DOCUMENTS ARE BASED ON REPORTS SUBMITTED BY OTHERS. ENGINEER CANNOT ASSURE NOR ASSUME ANY RESPONSIBILITY OR LIABILITY FOR THE ACCURACY OF RECORD DOCUMENTS. USERS OF RECORD DOCUMENTS ARE CAUTIONED AND ADVISED TO OBTAIN INDEPENDENT VERIFICATION OF ACTUAL CONDITIONS.

This is a instrument of service only and is the property of Taylor RyMar Corporation. Taylor RyMar Corporation. No reproduction or other use shall be made by any person or firm other than Taylor RyMar Corporation, without the express written permission of Taylor RyMar Corporation. Unauthorized use shall void the engineer's seal and signature hereon and no professional responsibility will result. Copyright 2008 Taylor RyMar Corporation.

TAYLOR RYMAR CORPORATION
60 EAST RIO SALADO PARKWAY
SUITE 1010
TEMPE, AZ 85281
PH: 480.951.0517 FAX:480.951.2353
WWW.TR-CORP.COM

ROOSEVELT IRRIGATION DISTRICT #92
WATER TREATMENT INSTALLATION
43RD AVENUE, 1/4 MI. NORTH OF BUCKEYE, PHOENIX, ARIZONA

Sheet Title:
SINGLE-LINE DIAGRAM, PANELS, AND CALCULATIONS

REVISIONS:

DATE:	12/14/2011
DRAWN BY:	CRL
CHECKED BY:	JDD
SCALE:	AS NOTED
PROJECT NO:	011175.00
SHEET	E1.0

Apr 24, 2012 - 10:03am
\\TRCFNP\Project Files\2011 Projects\011175.00 - RID Water Treatment\Electrical\RID-92\As-built\Electrical Drawings - 92.dwg

LIGHTING FIXTURE SCHEDULE

MOUNTING: (M/O)
- RE – RECESSED
- SP – SUSPENDED
- CL – CEILING SURFACE
- WL – WALL
- UC – UNDER CABINET
- CV – COVE
- PL – POLE
- GR – GROUND
- UN – UNIVERSAL

DOOR:
- FA – FLAT ALUMINUM
- FS – FLAT STEEL
- RA – REDRESSED ALUMINUM
- RS – REDRESSED STEEL

LAMP TYPE:
- FL – FLUORESCENT
- CF – COMPACT FLUORESCENT
- IN – INCANDESCENT
- LED – LIGHT EMITTING DIODE
- HS – HIGH PRESSURE SODIUM
- PSMH – PULSE START METAL HALIDE
- MV – MERCURY VAPOR
- LV – LOW VOLTAGE
- O – OTHER (SEE DESCRIPTION)

BALLAST:
- EB – ELECTRONIC BALLAST
- ML – MULTI-LEVEL SWITCHING
- EM – EMERGENCY BATTERY
- HPF – HIGH POWER FACTOR
- CWA – CONSTANT WATTAGE AUTO XFMR

LENS/LOUVER: (L/L)
- A – .125" ACRYLIC
- B – BLACK BAFFLE
- C – CLEAR ALZAK
- D – PARABOLIC
- F – FRESNEL
- G – TEMPERED GLASS
- H – WALL WASHER
- K – KSH12 .125" ACRYLIC
- K19 – KSH19 .125" ACRYLIC
- L – LOW IRIDESCENT SPECULAR ALUMINUM
- N – NONE
- O – OTHER (SEE DESCRIPTION)
- P – PRISMATIC
- PC – POLYCARBONATE
- WG – WIRE GUARD

PROVIDE DISCONNECTING MEANS FOR FLUORESCENT LUMINAIRES THAT CAN BE SERVICED IN PLACE WHICH INCLUDES LUMINAIRES THAT UTILIZE DOUBLE ENDED LAMPS, LUMINAIRES CONTAINING A BALLAST(S) & SUPPLIED FROM MULTI-WIRE BRANCH CIRCUITS. THE DISCONNECT MEANS MUST DISCONNECT ALL SUPPLY CONDUCTORS SIMULTANEOUSLY, INCLUDING THE GROUNDED CONDUCTOR. EXCEPTIONS ARE PROVIDED FOR; HAZARDOUS LOCATIONS, EMERGENCY ILLUMINATION, CORD-&-PLUG CONNECTED LUMINARES, INDUSTRIAL FACILITIES, & LUMINARES NOT SUPPLIED BY A MULTIWIRE BRANCH CIRCUIT WHICH DOES NOT LEAVE THE ILLUMINATED SPACE IN TOTAL DARKNESS. REFER TO NEC 410.130(G) FOR FURTHER CLARIFICATION.

CATALOG NUMBER SHALL NOT BE CONSIDERED COMPLETE AND MATERIAL SHALL NOT BE ORDERED BY MANUFACTURER AND CATALOG NUMBER ONLY. THE COMPLETE DESCRIPTION AND THE SPECIFICATION SHALL BE COORDINATED WITH THE CATALOG NUMBER TO DETERMINE THE EXACT MATERIAL AND ACCESSORIES TO BE ORDERED. THE FIRST MANUFACTURER LISTED IS THE BASIS FOR DESIGN, HOWEVER ANY SUBSTITUTIONS, WHETHER LISTED WITHIN SCHEDULE BELOW OR NOT, MUST BE PRIOR APPROVED IN WRITING BY BOTH ARCHITECT AND ENGINEER.

ALL LAMPS FOR THIS PROJECT SHALL BE FURNISHED AND INSTALLED BY THE ELECTRICAL CONTRACTOR UNLESS OTHERWISE NOTED.

REFER TO SPECIFICATION FOR LAMP AND BALLAST REQUIREMENTS, SHOP DRAWING SUBMITTAL REQUIREMENTS AND ADDITIONAL INFORMATION.

ITEM	DESCRIPTION	SIZE	MTG	LAMPS			VOLTAGE	BALLAST	L/L	APPROVED MANUFACTURER / MODEL	LAMP/BALLAST
				TYPE	QTY	SIZE					VA
SA	SINGE-HEAD AREA LIGHT FIXTURE SSS POLE 15.5' W/ 2.5' BASE	15.5"X22"X6.5"	PL	PSMH	1	150W PSMH	120	CWA	P	COOPER – LUMARK #MPTR-SL-150-120-LL OR APPROVED EQUAL	185

RECORD DRAWING
(4/23/2012)

THIS IS PART OF A RECORD DOCUMENT. RECORD DOCUMENTS ARE BASED ON REPORTS SUBMITTED BY OTHERS. ENGINEER CANNOT ASSURE NOR ASSUME ANY RESPONSIBILITY OR LIABILITY FOR THE ACCURACY OF RECORD DOCUMENTS. USERS OF RECORD DOCUMENTS ARE CAUTIONED AND ADVISED TO OBTAIN INDEPENDENT VERIFICATION OF ACTUAL CONDITIONS.

GENERAL NOTES:

A. ALL CONDUIT ROUTING AND STUB-UP LOCATIONS ARE DIAGRAMMATIC AND SHOWN FOR REFERENCE, CLARITY, AND INTENT PURPOSES ONLY. E.C. SHALL COORDINATE ALL ROUTING AS EXISTING FIELD CONDITIONS AND NEW CONSTRUCTION PERMITS. COORDINATE ROUTING WITH NEW AND EXISTING OBSTRUCTIONS AND WITH ALL APPLICABLE TRADES. COORDINATE STUB-UP LOCATIONS WITH FINAL EQUIPMENT LOCATIONS IN FIELD.

B. ALL EXTERIOR LIGHT FIXTURES TO COMPLY WITH LOCAL NIGHT SKY ORDINANCE.

C. ALL EXTERIOR LIGHTING TO BE FED WITH #10 CU. MINIMUM U.N.O.

D. ALL EXTERIOR ELECTRICAL EQUIPMENT TO BE RATED FOR WEATHER-PROOF/ NEMA-3R APPLICATIONS.

E. ALL FIXTURES INSTALLED OUTDOORS SHALL BE RATED FOR DAMP/WET LOCATIONS AS REQUIRED. THE CONTRACTOR SHALL COORDINATE DAMP/WET LOCATION RATING PER NEC ARTICLE 410-4. ALL INSTALLATIONS SHALL CONFORM TO NEC ARTICLE 410, ALL SUB ARTICLES.

F. CONTRACTOR TO COORDINATE EXACT SITE LIGHTING FIXTURE LOCATIONS WITH OWNER. ALL CONFLICTS SHALL BE IMMEDIATELY REPORTED TO THE ENGINEER AND ARCHITECT.

G. ACTUAL SIZE, QUANTITY, INSTALLATION REQUIREMENTS, AND EXACT ROUTING OF SRP SECONDARY SERVICE CONDUITS TO BE PROVIDED AND INSTALLED PER SRP REQUIREMENTS AND/OR DIRECTION.

H. COORDINATE ALL PROPOSED PRIMARY AND SECONDARY SERVICE FEEDER CONDUIT ROUTINGS AND LOCATIONS WITH POWER COMPANY. VERIFY ALL REQUIREMENTS AND COMPLY AS DIRECTED.

I. SEE POWER COMPANY PLANS FOR REQUIRED TRANSFORMER(S), PULLING ENCLOSURES, SWITCHING CABINETS, CAPACITOR BANKS AND PRIMARY CONDUIT ROUTING. E.C. TO COMPLY WITH ALL POWER COMPANY REQUIREMENTS.

J. ALL WIRING SHALL BE INSTALLED UNDER-GROUND IN PVC CONDUIT WHERE POSSIBLE. WHERE EXPOSED, PROVIDE IMC CONDUIT WITH WEATHERPROOF FLEX CONNECTIONS.

G. FIXTURE / ITEM IDENTIFIED WITH LETTER:
- 'X' – INDICATES DEVICE TO REMAIN.
- 'XR' – INDICATES DEVICE TO BE REMOVED.
- 'XRR' – INDICATES DEVICE TO BE REMOVED & RELOCATED.

#KEY NOTES:

1. EXISTING UTILITY POWER POLE WITH FEEDING OVER-HEAD POWER LINES TO REMAIN.
2. NEW UTILITY POWER POLE. COORDINATE EXACT LOCATION, EXTENSION OF EXISTING OVER-HEAD UTILITY LINES TO THIS POLE, AND ROUTING OF PRIMARY FEEDERS UNDER-GROUND FROM THIS POLE TO NEW UTILITY POWER TRANSFORMER WITH KELLER ELECTRICAL AND POWER COMPANY.
3. INSTALL PRIMARY POWER CONDUITS, PER POWER COMPANY STANDARDS. E.C. SHALL COORDINATE EXACT ROUTING AND COMPLY WITH ALL REQUIREMENTS STIPULATED BY THE POWER COMPANY.
4. PROPOSED LOCATION OF POWER COMPANY PAD MOUNTED TRANSFORMER. PROVIDE CONCRETE PAD PER UTILITY COMPANY STANDARDS. MAINTAIN CLEARANCES OF 12-FEET FROM FRONT AND 3-FEET FROM BACK AND SIDES OF TRANSFORMER AS REQUIRED BY SRP. VERIFY ALL REQUIRED CLEARANCES WITH UTILITY BEFORE PAD INSTALLATION.
5. INSTALL SECONDARY POWER CONDUITS, PER POWER COMPANY STANDARDS. E.C. SHALL COORDINATE EXACT ROUTING AND COMPLY WITH ALL REQUIREMENTS STIPULATED BY THE POWER COMPANY.
6. NEW SERVICE ENTRANCE SECTION WITH CONCRETE HOUSE KEEPING PAD PER POWER COMPANY REQUIREMENTS. SES TO HAVE NEW TRANSFORMER AND PANEL-'P92' BUILT-IN ON A DEDICATED SECTION. REFER TO SINGLE LINE DIAGRAM ON SHEET E1.0 FOR ADDITIONAL INFORMATION. MAINTAIN A MINIMUM OF 24" WORKING CLEARANCE IN FRONT OF SERVICE ENCLOSURE DOORS IN OPEN POSITION.
7. NOT USED.
8. CONTROL PANEL BY VERTECH. PROVIDE POWER TO CONTROL PANEL AS SHOWN. PROVIDE 3/4" CONDUITS AS INDICATED FOR POWER AND CONTROL WIRING. ALL POWER AND CONTROLS CONDUCTORS FROM CONTROL PANEL TO CONTROL EQUIPMENT SHALL BE PROVIDED BY ELECTRICAL CONTRACTOR AS DIRECTED BY CONTROLS CONTRACTOR. SEE VERTECH CONTROL DRAWINGS FOR ADDITIONAL INFORMATION AND REQUIREMENTS.
9. PROVIDE W.P./GFCI RECEPTACLE FOR 120V, 3/4HP SUMP PUMP POWER CONNECTION AND POST MOUNTED CONTACTOR WITH NEMA-3R ENCLOSURE AND HOA FOR AUTOMATIC AND MANUAL CONTROL OF SUMP PUMP. SQUARE-D CLASS #8502-SBH1-V02-CS, OR EQUAL. COORDINATE EXACT LOCATION AND WIRING REQUIREMENTS WITH CONTROLS CONTRACTOR AND OWNER. COORDINATE EXACT LOCATION OF RECEPTACLE WITH MECHANICAL CONTRACTOR PRIOR TO ROUGH-IN.
10. PROVIDE W.P. J-BOX AND 3/4" CONDUIT AS SHOWN WITH POWER WIRING FROM AUTOMATIC VALVE TO VERTECH CONTROL PANEL. COORDINATE EXACT ROUGH-IN LOCATION, WIRING REQUIREMENTS, CONDUIT ROUTING AND CONNECTION REQUIREMENTS WITH OWNER, MECHANICAL, AND CONTROLS CONTRACTOR. SEE SHEET M2.1 FOR VALVE LOCATION.
11. PROVIDE W.P. J-BOX AND 3/4" CONDUIT AS SHOWN WITH POWER WIRING FROM FLOW METER LOCATION TO VERTECH CONTROL PANEL. COORDINATE EXACT ROUGH-IN LOCATION, WIRING REQUIREMENTS, CONDUIT ROUTING AND CONNECTION REQUIREMENTS WITH OWNER, MECHANICAL, AND CONTROLS CONTRACTOR. SEE SHEET M2.1 FOR FLOW METER LOCATIONS.
12. PROVIDE W.P. J-BOX AND 3/4" CONDUIT AS SHOWN WITH CONTROL CABLING FROM FLOW METER LOCATION TO VERTECH CONTROL PANEL. COORDINATE EXACT ROUGH-IN LOCATION, CABLING REQUIREMENTS, CONDUIT ROUTING AND CONNECTION REQUIREMENTS WITH OWNER, MECHANICAL, AND CONTROLS CONTRACTOR. SEE SHEET M2.1 FOR FLOW METER LOCATIONS.
13. PROVIDE W.P. J-BOX AND 3/4" CONDUIT AS SHOWN WITH CONTROL CABLING FROM LOCATION OF SUMP PUMP HIGH AND LOW LEVEL SENSORS TO VERTECH CONTROL PANEL. COORDINATE EXACT ROUGH-IN LOCATION, CABLING REQUIREMENTS, CONDUIT ROUTING AND CONNECTION REQUIREMENTS WITH OWNER, MECHANICAL, AND CONTROLS CONTRACTOR.
14. PROVIDE W.P./GFCI TYPE CONVENIENCE RECEPTACLE. MOUNT AT +24"AFF ON UNI-STRUT STRUCTURE SUPPORTING MINI POWER ZONE PER KEY-NOTE #7 ABOVE.
15. EXISTING WELL PUMP TO REMAIN. RE-CONNECT TO NEW SERVICE ENTRANCE SECTION. SEE SHEET E1.0 FOR ADDITIONAL INFORMATION.
16. PROVIDE J-BOX FOR TRANSITIONING FROM UNDER-GROUND TO ABOVE GROUND CONDUIT. COORDINATE EXACT LOCATION IN THE FIELD WITH MECHANICAL AND CONTROLS CONTRACTOR.
17. PROVIDE 3/4" CONDUIT AS SHOWN WITH 120V CONTROL WIRE FROM SUMP PUMP CONTROL CONTACTOR HOA SWITCH (120VAC) TO VERTECH CONTROL PANEL SUMP PUMP RELAY. COORDINATE EXACT ROUGH-IN LOCATION, CABLING REQUIREMENTS, CONDUIT ROUTING AND CONNECTION REQUIREMENTS WITH OWNER, AND CONTROLS CONTRACTOR.

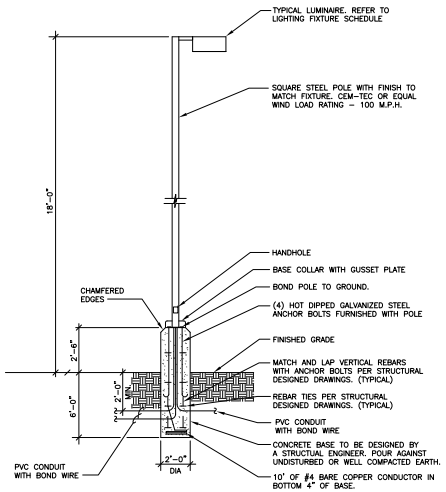

POLE MOUNTED LIGHT FIXTURE DETAIL

NO SCALE

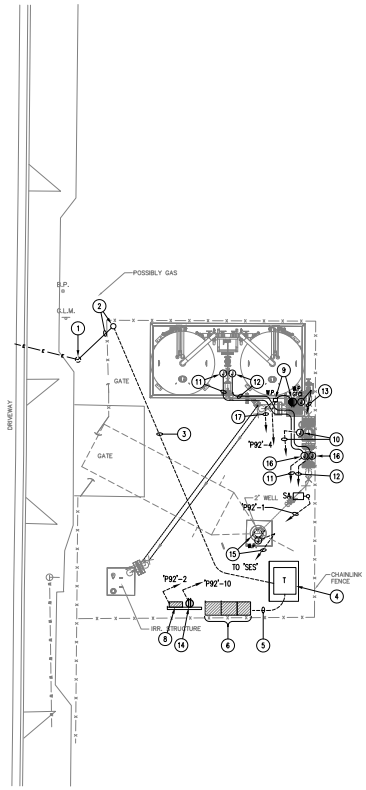

ELECTRICAL SITE PLAN – NEW WORK

1" = 10'-0"

This is a instrument of service only and is the property of Taylor RyMar Corporation. Its reproduction or other use shall be made by any person or firm other than Taylor RyMar Corporation, without the express written permission of Taylor RyMar Corporation. Unauthorized use shall void the engineer's seal and signature hereon and so professional responsibility will remain. Copyright 2008 Taylor RyMar Corporation.

TAYLOR RYMAR CORPORATION
60 EAST RIO SALADO PARKWAY
SUITE 412
TEMPE, AZ 85281
PH: 480.951.0517 FAX:480.951.2353
WWW.TR-CORP.COM

ROOSEVELT IRRIGATION DISTRICT #92
WATER TREATMENT INSTALLATION
43RD AVENUE, 1/4 MI. NORTH OF BUCKEYE, PHOENIX, ARIZONA
Sheet Title: ELECTRICAL SITE PLAN – NEW WORK

REVISIONS:

DATE:	12/14/2011
DRAWN BY:	CRL
CHECKED BY:	JDD
SCALE:	AS NOTED
PROJECT NO:	011175.00
SHEET	E2.0

Apr 24, 2012 – 9:58am
\\TRCFNP\Project Files\2011 Projects\011175.00 – RID Water Treatment\Electrical\RID-92\As-built\Electrical Drawings – 92.dwg

Spinnaker Holdings, LLC

Roosevelt Irrigation District (RID) Water Remediation
SCADA and Control Package
Well #92 RTU Control Panel RID-92

Vertech Project Number P110124

January 5, 2012

WELL #92 RTU CONTROL PANEL RID-92 - DRAWING INDEX

Drawing Set	Drawing Name	Sheet #	Revision	Description
RID-92	P110124-RID92-01	01	1	Well #92 RTU Control Panel RID-92 - Title Page & Drawing Index
	P110124-RID92-02	02	1	Well #92 RTU Control Panel RID-92 - Symbols & Legends
	P110124-RID92-03	03	1	Well #92 RTU Control Panel RID-92 - General Notes
	P110124-RID92-04	04	1	Well #92 RTU Control Panel RID-92 - 120VAC Power Distribution
	P110124-RID92-05	05	1	Well #92 RTU Control Panel RID-92 - 24VDC Power Distribution 24VDC UPS Power Distribution
	P110124-RID92-06	06	1	Well #92 RTU Control Panel RID-92 - 24VDC UPS Power Distribution S7-1200 CPU 1214C Module PLC01 - 14 Pt. Discrete Input
	P110124-RID92-07	07	1	Well #92 RTU Control Panel RID-92 - S7-1200 CPU 1214C Module PLC01 - 10 Pt. Relay Output & Field Interlocks
	P110124-RID92-08	08	1	Well #92 RTU Control Panel RID-92 - S7-1200 CPU 1214C Module PLC02 - 8 Pt. Analog Input
	P110124-RID92-09	09	1	Well #92 RTU Control Panel RID-92 - S7-1200 CPU 1214C Module PLC03 - 8 Pt. Analog Input
	P110124-RID92-10	10	1	Well #92 RTU Control Panel RID-92 - Enclosure Layout
	P110124-RID92-11	11	1	Well #92 RTU Control Panel RID-92 - Backplate Layout & Bill of Material
	P110124-RID92-12	12	1	Well #92 RTU Control Panel RID-92 - PLC Rack 0 Layout & Bill of Material
	P110124-RID92-13	13	1	Well #92 RTU Control Panel RID-92 - Terminal Strip Layout
	P110124-RID92-14	14	1	Well #92 RTU Control Panel RID-92 - Engraving Schedule

P110124-RID92-01.dwg

Vertech
www.vertech.com

This document contains information which is the property of Vertech Industrial Systems and is provided on a restricted basis. It is not to be used in any way detrimental to the interests of Vertech Industrial Systems and may not be copied, transmitted to others or used for manufacturing purposes without the written permission of Vertech Industrial Systems. The recipient agrees to these conditions by acceptance of this drawing.

REV	DATE	DESCRIPTION	ENG	DSN
1	01/05/12	As-Built	RS	JMM
0	11/07/11	Issue For Construction	RS	MAS
A	11/03/11	Issue For Submittal	RS	MAS

System Designed For:

Spinnaker Holdings, LLC
150 Pecan St.
Denison, TX 75020-2700

Sheet Description:

Roosevelt Irrigation District Water Remediation
Well #92 RTU Control Panel RID-92
Title Page
Drawing Index

Engineer: R. Smith		**Client Job ID:** DW100340	**Vertech Job ID:** P110124
Designer: M. Szymanski		**Creation Date:** 10/12/2011	**Drawing Set:** RID-92
Rev: 1	**Scale:** NTS	**Sheet Size:** B	**Sheet Number:** 01 OF 14

SYMBOLS:

SWITCHES:

XXXX PUSHBUTTON N.O.
XXXX PUSHBUTTON N.C.
XXXX PUSHBUTTON MUSHROOM HEAD N.O.
XXXX PUSHBUTTON MUSHROOM HEAD N.C.
XXXX SELECTOR SWITCH 2 POSITION MAINTAINED N.O.
XXXX SELECTOR SWITCH 2 POSITION KEYED N.O.
XXXX SELECTOR SWITCH 3 POSITION SPRING CENTER N.O.
XXXX SELECTOR SWITCH 3 POSITION KEYED N.C.
XXXX SELECTOR SWITCH 3 POSITION KEYED N.O.
XXX TEMPERATURE SWITCH N.C.
XXXX TEMPERATURE SWITCH N.O.
XXXX LIMIT SWITCH N.C.
XXXX LIMIT SWITCH HELD OPEN N.C.
XXXX LIMIT SWITCH N.O.
XXXX LIMIT SWITCH HELD CLOSED N.O.
XXXX PROXIMITY SWITCH N.C
XXXX PROXIMITY SWITCH N.O.

XXXX FOOT SWITCH MAINTAINED N.C
XXXX FOOT SWITCH SPRING RETURNED N.C
XXXX FOOT SWITCH MAINTAINED N.O.
XXXX FOOT SWITCH SPRING RETURNED N.O.
XXXX PULL CORD N.C
XXXX PULL CORD N.O.
XXXX PHOTO EYE N.O.
XXXX PHOTO EYE N.C.
XXXX PHOTO EYE EMITTER
H O A SELECTOR SWITCH 3 POSITION
XXXX TIMER
XXXX KNIFE SWITCH
XXXX CONTACT N.O.
XXXX CONTACT N.C

TERMINALS:

XXX TERMINAL LOCAL
XX TERMINAL FIELD
XX (X) DISTRIBUTION BLOCK (POWER OR GROUND)
XX TERMINAL BANK LOCAL
XX TERMINAL BANK FIELD
XX TERMINAL FIELD LOCAL
GROUND TERMINAL DIN RAIL MOUNTED
XX GROUND FIELD TERMINAL DIN RAIL MOUNTED
SHIELD TERMINAL LOCAL
XX SHIELD TERMINAL FIELD

GROUNDING:

XXXX EARTH GROUNDING
XXXX ISOLATION GROUNDING

MISCELLANEOUS:

XXXX CIRCUIT BREAKER
XXX CIRCUIT BREAKER 3 PHASE XXX
FU## AMPS FUSE
CR X1 CR X2 RELAY COIL
XXXX HP MOTOR
XXXX SOLENOID

XXXX RESISTOR
XXXX HP OL MOTOR STARTER WITH OVERLOAD
XXXX X PILOT LIGHT PUSH TO TEST
XXXX X PILOT LIGHT
XXXX ALARM HORN (BELL)
XXXX ALARM HORN
XXXX ALARM HORN (BUZZ)
XXXX ALARM BEACON
XXXX X HORN LIGHT
XXXX X STACK LIGHT
OL OVERLOAD RELAY
XXXX FUSED DISCONNECT
XXXX DISCONNECT
FU XXX FU XXX FU XXX XX AMP FUSED DISCONNECT 3 PHASE

GENERAL:

(#14AWG Yellow) WIRE SIZE & COLOR
JUMPER
XXXX X XXXXXXX PLC INPUT
XXXX XXXXXXX X PLC OUTPUT
XXX-XXX EQUIPMENT TAG

LEGENDS:

ABBREVIATIONS	
SCD	Start Command
SFW	Start Forward
SRV	Start Reverse
RNG	Running
RFW	Running Forward
RRV	Running Reverse
OVL	Overload
DFT	Drive Fault
BRK	Brake
PBL	Push Button Light
RST	Reset
STR	Starter
VFD	Variable Frequency Drive
CBR	Clutch/Brake
CTH	Clutch
PS	Power Supply
CB	Circuit Breaker
ES	EtherNet Switch
PDB	Power Distribution Block
DISC	Disconnect
RCP	Receptacle
TS	Temperature Switch
ECR	Safety Relay
ECRM	Safety Relay Master
ENT	EntherNet/IP
MP	Motor Protector
LR	Line Reactor
MSD	Motor Safety Disconnect
DS	Door Switch
EL	Enclosure Light
DB	Dynamic Break
TVSS	Transient Voltage Surge Suppressor
FU	Fuse
HMT	Hour Meter

P110124-RID92-02.dwg

Vertech
www.vertech.com

This document contains information which is the property of Vertech Industrial Systems and is provided on a restricted basis. It is not to be used in any way detrimental to the interests of Vertech Industrial Systems and may not be copied, transmitted to others or used for manufacturing purposes without the written permission of Vertech Industrial Systems. The recipient agrees to these conditions by acceptance of this drawing.

REV	DATE	DESCRIPTION	ENG	DSN
1	01/05/12	As-Built	RS	JMM
0	11/07/11	Issue For Construction	RS	MAS
A	11/03/11	Issue For Submittal	RS	MAS

System Designed For:

Spinnaker Holdings, LLC
150 Pecan St.
Denison, TX 75020-2700

Sheet Description:

Roosevelt Irrigation District Water Remediation
Well #92 RTU Control Panel RID-92
Symbols & Legend

Engineer: R. Smith		**Client Job ID:** DW100340	**Vertech Job ID:** P110124
Designer: M. Szymanski		**Creation Date:** 10/12/2011	**Drawing Set:** RID-92
Rev: 1	**Scale:** NTS	**Sheet Size:** B	**Sheet Number:** 02 OF 14

General Notes:

1. Panel shall be manufactured to UL-508a Standards, and the required UL markings shall be affixed to the interior of the panel. The panel shall ship with a complete as-built drawing set.

2. The following chart shows the standard wire colors for various voltages in the drawing set.

Color	Abbreviation	Usage
Brown	BRN	3-Phase AC - Phase A
Orange	ORG	3-Phase AC - Phase B
Yellow	YEL	3-Phase AC - Phase C
Black	BLK	120VAC Power (Hot)
White	WHT	120VAC Neutral
Red	RED	120VAC Control
Green w/ Yellow Stripe	GRN/YEL	AC Ground
Yellow	YEL	Foreign Power
White w/ Yellow Stripe	WHT/YEL	Foreign Neutral
Purple	PUR	Temporary
Blue	BLU	24VDC Power & Control
White w/ Blue Stripe	WHT/BLU	24VDC Common (Grounded)

3. All analog signal cables shall be Belden 8760; 2-conductor #18AWG (BLK/CLR) twisted/shielded: BLK = Positive (+); CLR = Negative (-).

P110124-RID92-03.dwg

Vertech

www.vertech.com

This document contains information which is the property of Vertech Industrial Systems and is provided on a restricted basis. It is not to be used in any way detrimental to the interests of Vertech Industrial Systems and may not be copied, transmitted to others or used for manufacturing purposes without the written permission of Vertech Industrial Systems. The recipient agrees to these conditions by acceptance of this drawing.

REV	DATE	DESCRIPTION	ENG	DSN
1	01/05/12	As-Built	RS	JMM
0	11/07/11	Issue For Construction	RS	MAS
A	11/03/11	Issue For Submittal	RS	MAS

System Designed For:

Spinnaker Holdings, LLC
150 Pecan St.
Denison, TX 75020-2700

Sheet Description:

Roosevelt Irrigation District Water Remediation
Well #92 RTU Control Panel RID-92
General Notes

Engineer: R. Smith		**Client Job ID:** DW100340	**Vertech Job ID:** P110124
Designer: M. Szymanski		**Creation Date:** 10/12/2011	**Drawing Set:** RID-92
Rev: 1	**Scale:** NTS	**Sheet Size:** B	**Sheet Number:** 03 OF 14

120VAC Power Distribution
RTU Control Panel RID-92

Notes:

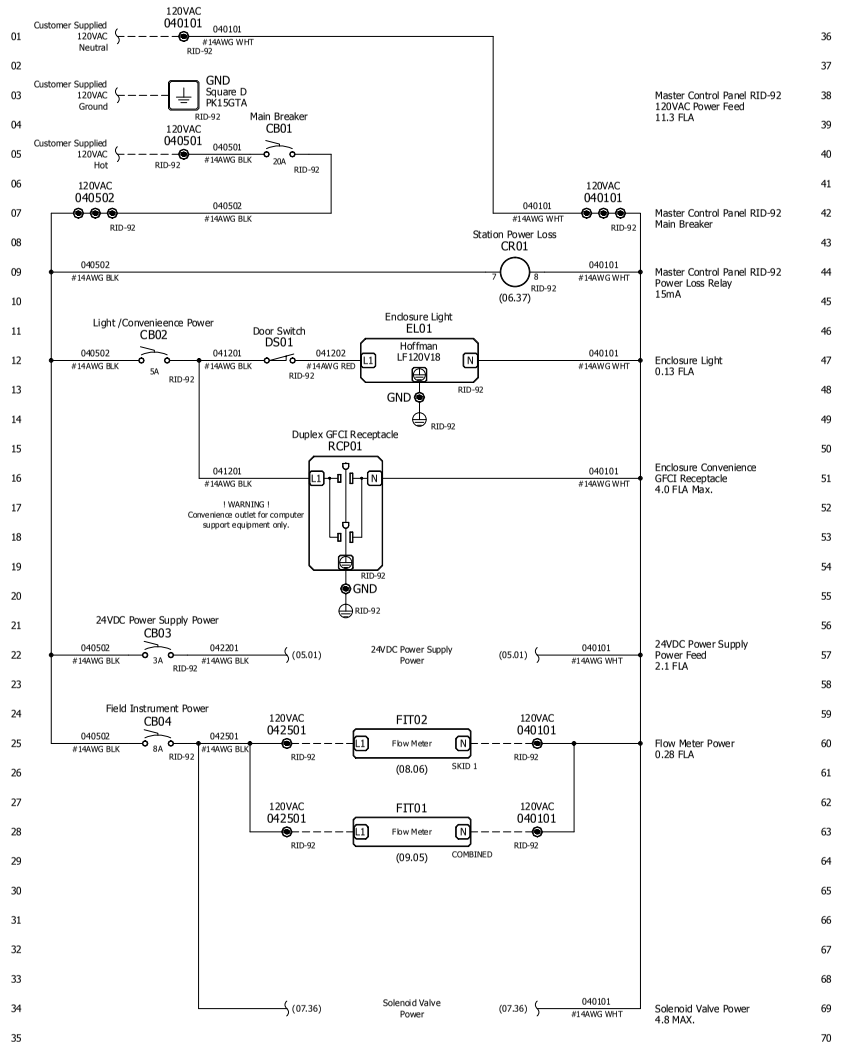

INTENTIONALLY LEFT BLANK

P110124-RID92-04.dwg

Vertech
www.vertech.com

This document contains information which is the property of Vertech Industrial Systems and is provided on a restricted basis. It is not to be used in any way detrimental to the interests of Vertech Industrial Systems and may not be copied, transmitted to others or used for manufacturing purposes without the written permission of Vertech Industrial Systems. The recipient agrees to these conditions by acceptance of this drawing.

REV	DATE	DESCRIPTION	ENG	DSN
1	01/05/12	As-Built	RS	JMM
0	11/07/11	Issue For Construction	RS	MAS
A	11/03/11	Issue For Submittal	RS	MAS

System Designed For:

Spinnaker Holdings, LLC
150 Pecan St.
Denison, TX 75020-2700

Sheet Description:

Roosevelt Irrigation District Water Remediation
Well #92 RTU Control Panel RID-92
120VAC Power Distribution

Engineer: R. Smith		**Client Job ID:** DW100340	**Vertech Job ID:** P110124
Designer: M. Szymanski		**Creation Date:** 10/12/2011	**Drawing Set:** RID-92
Rev: 1	**Scale:** NTS	**Sheet Size:** B	**Sheet Number:** 04 OF 14

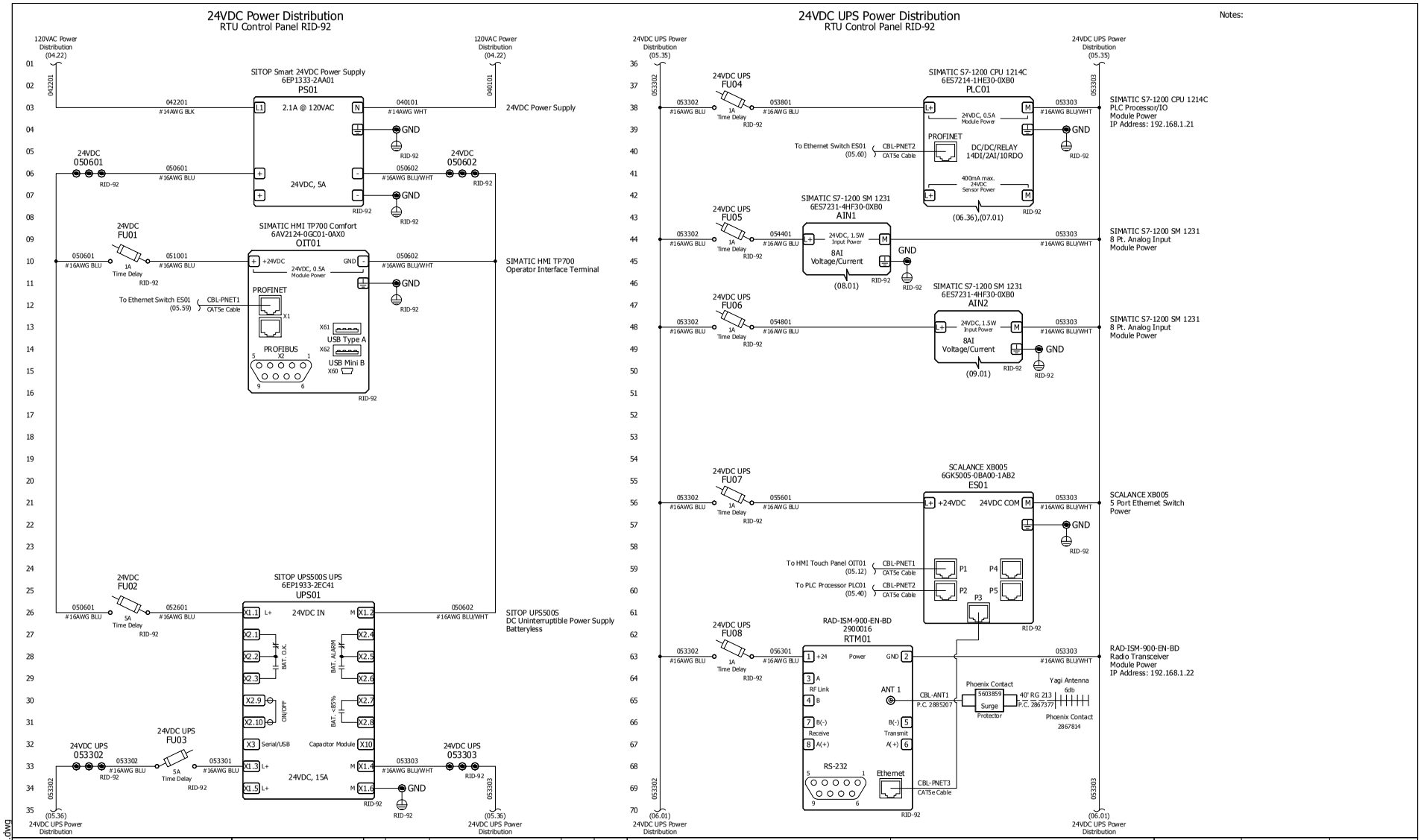

Notes:

P110124-RID92-05.dwg

Vertech

www.vertech.com

This document contains information which is the property of Vertech Industrial Systems and is provided on a restricted basis. It is not to be used in any way detrimental to the interests of Vertech Industrial Systems and may not be copied, transmitted to others or used for manufacturing purposes without the written permission of Vertech Industrial Systems. The recipient agrees to these conditions by acceptance of this drawing.

REV	DATE	DESCRIPTION	ENG	DSN
1	01/05/12	As-Built	RS	JMM
0	11/07/11	Issue For Construction	RS	MAS
A	11/03/11	Issue For Submittal	RS	MAS

System Designed For:

Spinnaker Holdings, LLC
150 Pecan St.
Denison, TX 75020-2700

Sheet Description:

Roosevelt Irrigation District Water Remediation
Well #92 RTU Control Panel RID-92
24VDC Power Distribution
24VDC UPS Power Distribution

Engineer:	Client Job ID:	Vertech Job ID:
R. Smith	DW100340	P110124
Designer:	**Creation Date:**	**Drawing Set:**
M. Szymanski	10/12/2011	RID-92
Rev: 1	**Scale:** NTS	**Sheet Size:** B	**Sheet Number:** 05 OF 14

24VDC UPS Power Distribution
RTU Control Panel RID-92

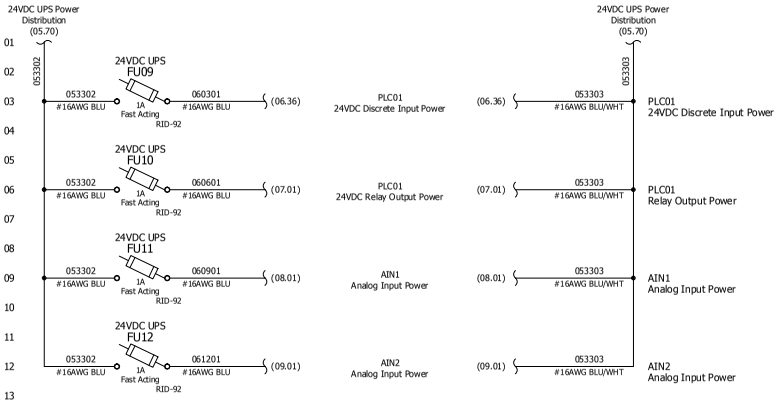

S7-1200 CPU 1214C Module PLC01 - 14 Pt. Discrete Input
RTU Control Panel RID-92

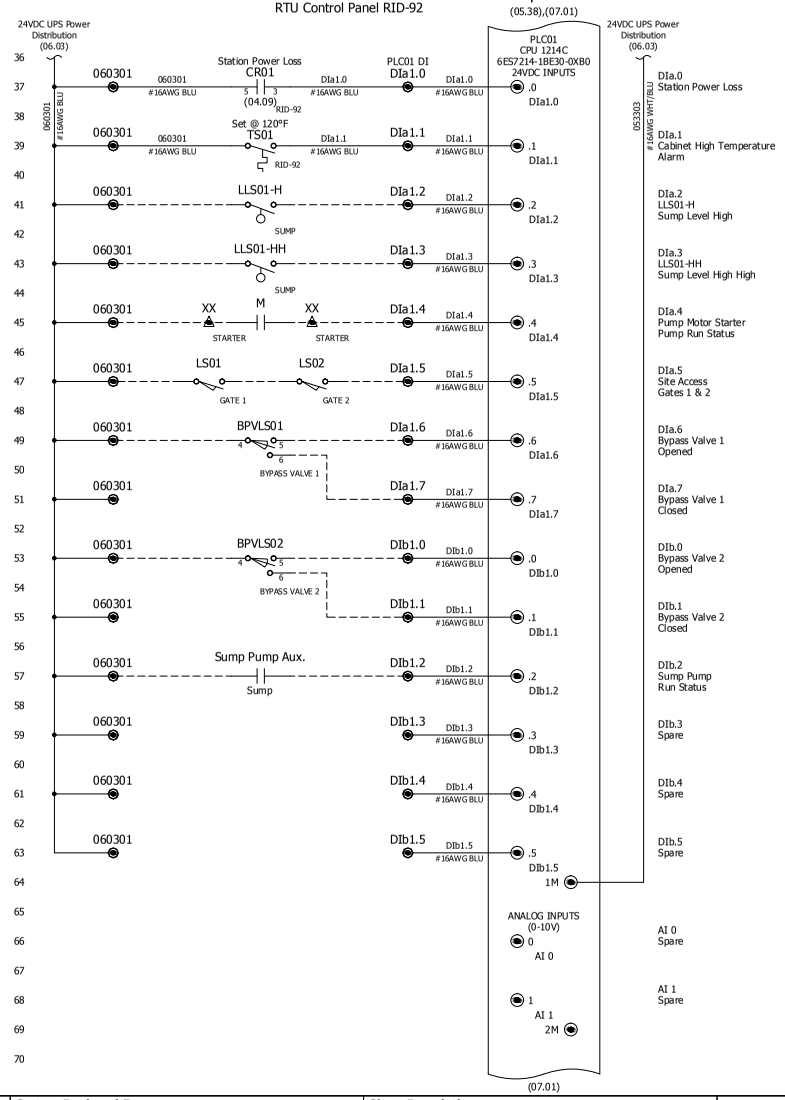

Notes:

P110124-RID92-06.dwg

Vertech
www.vertech.com

This document contains information which is the property of Vertech Industrial Systems and is provided on a restricted basis. It is not to be used in any way detrimental to the interests of Vertech Industrial Systems and may not be copied, transmitted to others or used for manufacturing purposes without the written permission of Vertech Industrial Systems. The recipient agrees to these conditions by acceptance of this drawing.

REV	DATE	DESCRIPTION	ENG	DSN
1	01/05/12	As-Built	RS	JMM
0	11/07/11	Issue For Construction	RS	MAS
A	11/03/11	Issue For Submittal	RS	MAS

System Designed For:

Spinnaker Holdings, LLC
150 Pecan St.
Denison, TX 75020-2700

Sheet Description:

Roosevelt Irrigation District Water Remediation
Well #92 RTU Control Panel RID-92
24VDC UPS Power Distibution
S7-1200 CPU 1214C Module PLC01 - 14 Pt. Discrete Input

Engineer: R. Smith		**Client Job ID:** DW100340	**Vertech Job ID:** P110124
Designer: M. Szymanski		**Creation Date:** 10/12/2011	**Drawing Set:** RID-92
Rev: 1	**Scale:** NTS	**Sheet Size:** B	**Sheet Number:** 06 OF 14

S7-1200 CPU 1214C Module PLC01 - 10 Pt. Relay Output
RTU Control Panel RID-92

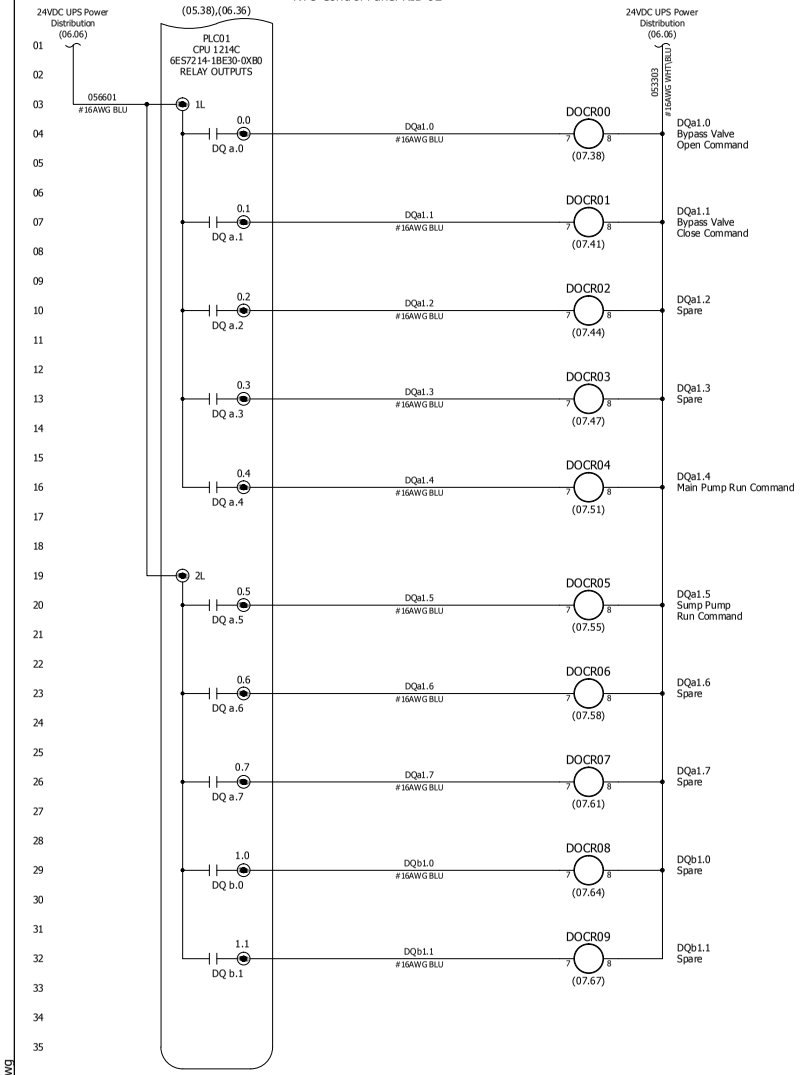

S7-1200 CPU 1214C Module PLC01 - Field Interlocks
RTU Control Panel RID-92

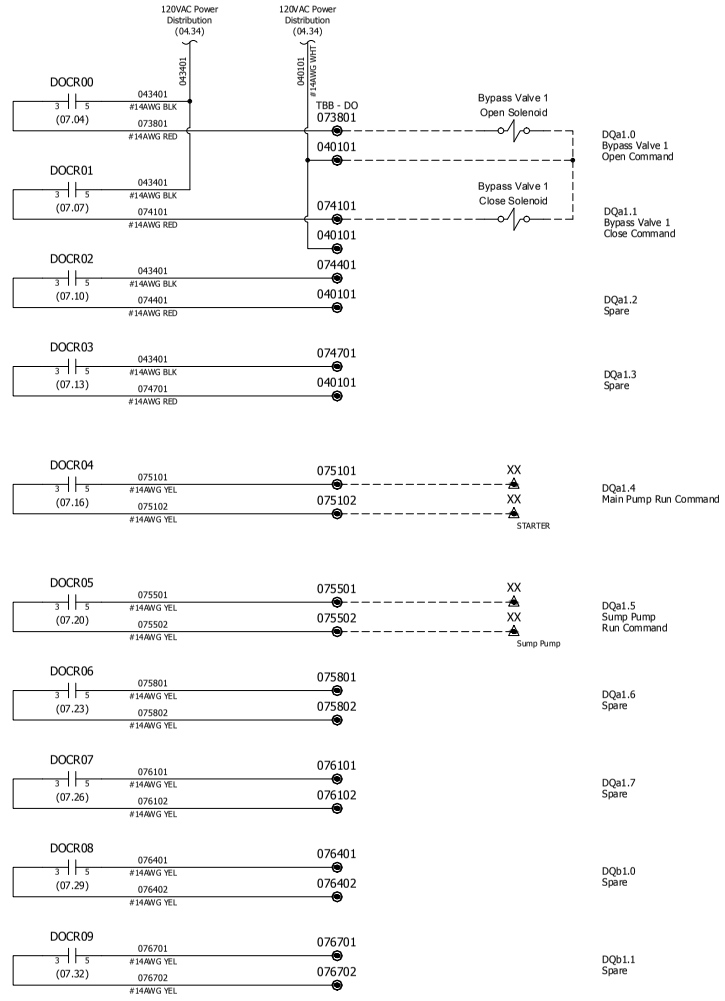

Notes:

P110124-RID92-07.dwg

Vertech
www.vertech.com

This document contains information which is the property of Vertech Industrial Systems and is provided on a restricted basis. It is not to be used in any way detrimental to the interests of Vertech Industrial Systems and may not be copied, transmitted to others or used for manufacturing purposes without the written permission of Vertech Industrial Systems. The recipient agrees to these conditions by acceptance of this drawing.

REV	DATE	DESCRIPTION	ENG	DSN
1	01/05/12	As-Built	RS	JMM
0	11/07/11	Issue For Construction	RS	MAS
A	11/03/11	Issue For Submittal	RS	MAS

System Designed For:

Spinnaker Holdings, LLC
150 Pecan St.
Denison, TX 75020-2700

Sheet Description:

Roosevelt Irrigation District Water Remediation Well #92 RTU Control Panel RID-92
S7-1200 CPU 1214C Module PLC01 - 10 Pt. Relay Output
S7-1200 CPU 1214C Module PLC01 - Field Interlocks

Engineer:	Client Job ID:	Vertech Job ID:
R. Smith	DW100340	P110124
Designer:	**Creation Date:**	**Drawing Set:**
M. Szymanski	10/12/2011	RID-92
Rev: 1	**Scale:** NTS	**Sheet Size:** B
		Sheet Number: 07 OF 14

S7-1200 SM 1231 Module PLC02 - 8 Pt. Analog Input
RTU Control Panel RID-92

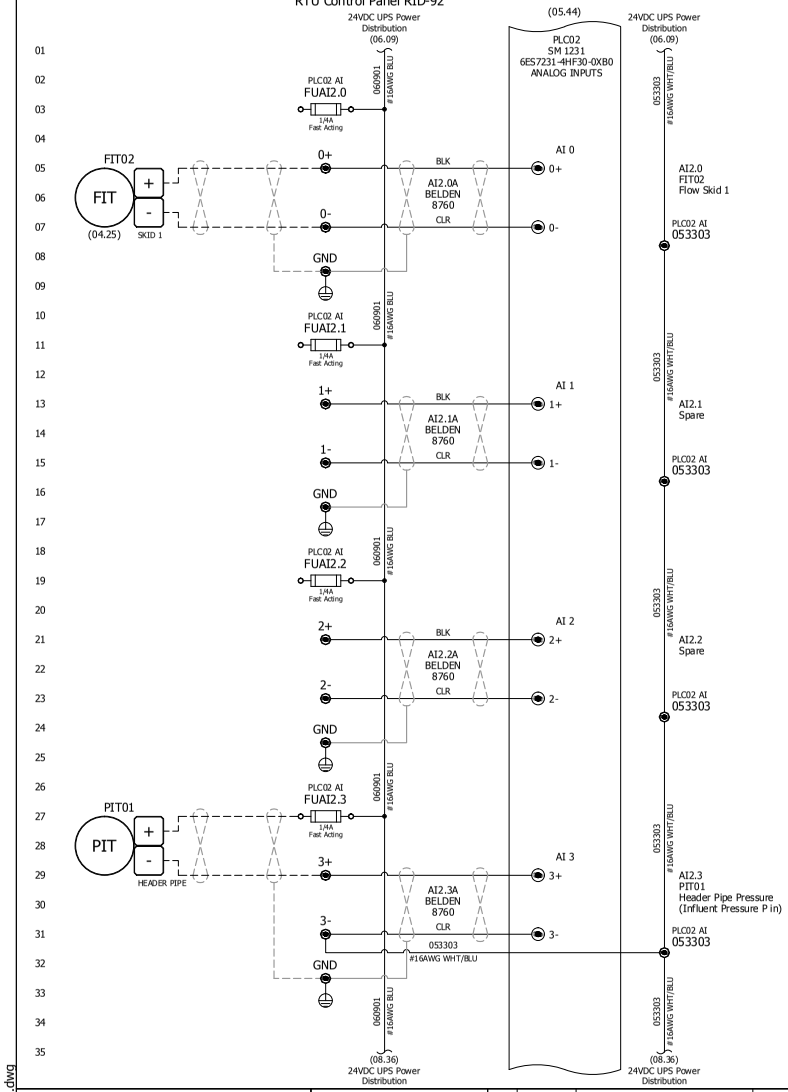

S7-1200 SM 1231 Module PLC02 - 8 Pt. Analog Input
RTU Control Panel RID-92

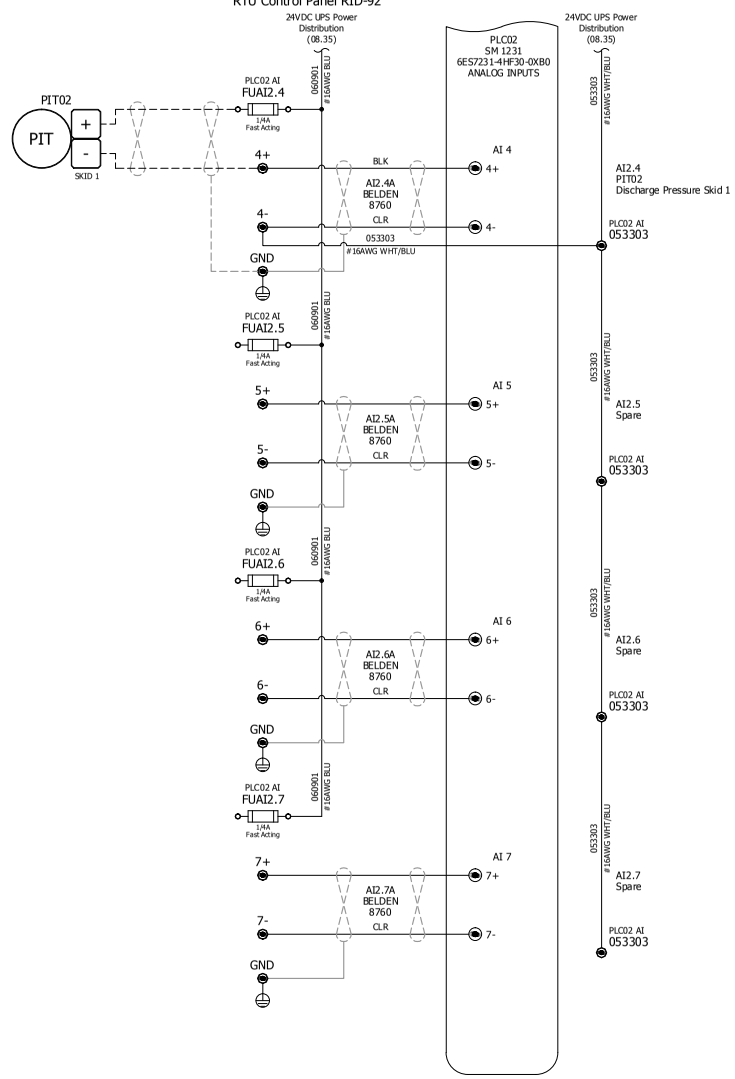

Notes:

P110124-RID92-08.dwg

Vertech
www.vertech.com

This document contains information which is the property of Vertech Industrial Systems and is provided on a restricted basis. It is not to be used in any way detrimental to the interests of Vertech Industrial Systems and may not be copied, transmitted to others or used for manufacturing purposes without the written permission of Vertech Industrial Systems. The recipient agrees to these conditions by acceptance of this drawing.

REV	DATE	DESCRIPTION	ENG	DSN
1	01/05/12	As-Built	RS	JMM
0	11/07/11	Issue For Construction	RS	MAS
A	11/03/11	Issue For Submittal	RS	MAS

System Designed For:

Spinnaker Holdings, LLC
150 Pecan St.
Denison, TX 75020-2700

Sheet Description:

Roosevelt Irrigation District Water Remediation
Well #92 RTU Control Panel RID-92
S7-1200 SM 1231 Module PLC02 - 8 Pt. Analog Input

Engineer: R. Smith		**Client Job ID:** DW100340	**Vertech Job ID:** P110124
Designer: M. Szymanski		**Creation Date:** 10/12/2011	**Drawing Set:** RID-92
Rev: 1	**Scale:** NTS	**Sheet Size:** B	**Sheet Number:** 08 OF 14

S7-1200 SM 1231 Module PLC03 - 8 Pt. Analog Input
RTU Control Panel RID-92

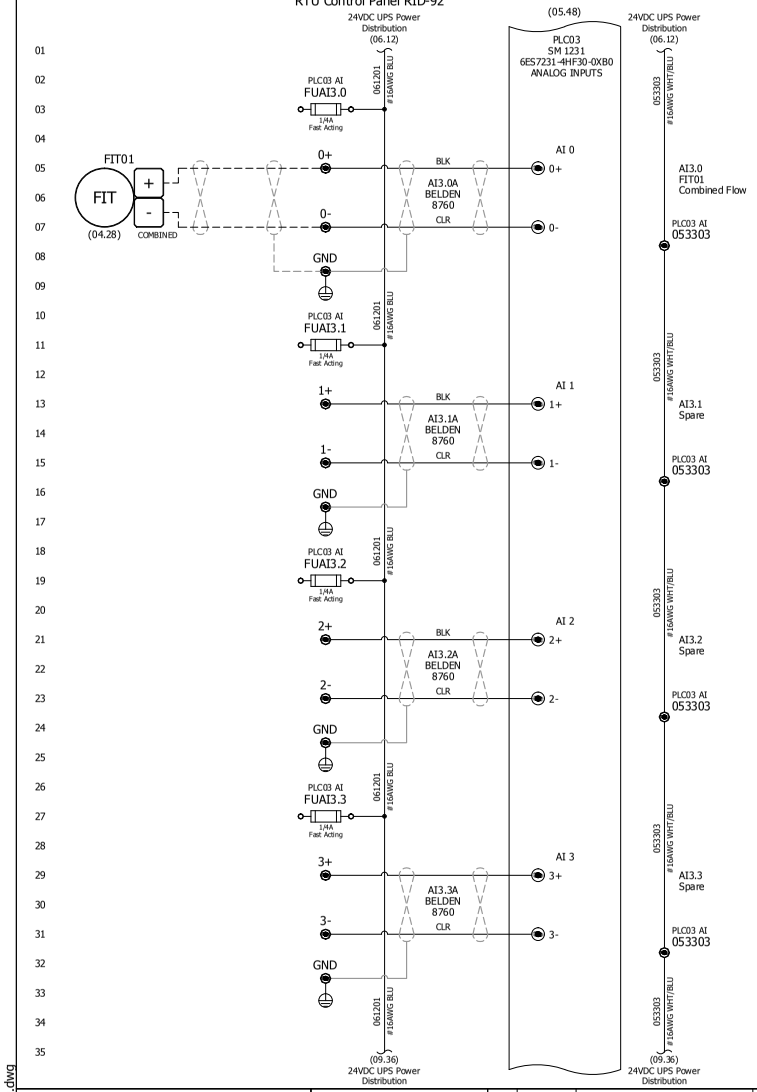

S7-1200 SM 1231 Module PLC03 - 8 Pt. Analog Input
RTU Control Panel RID-92

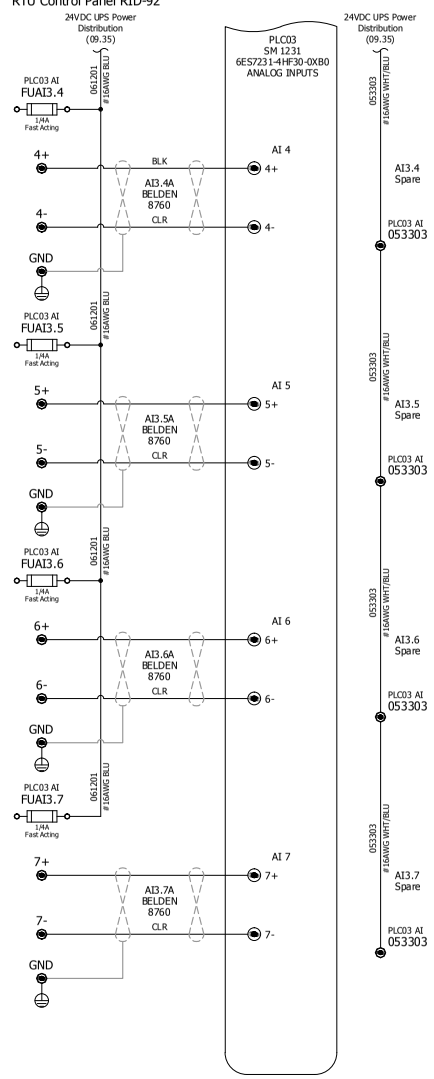

Notes:

P110124-RID92-09.dwg

Vertech
www.vertech.com

This document contains information which is the property of Vertech Industrial Systems and is provided on a restricted basis. It is not to be used in any way detrimental to the interests of Vertech Industrial Systems and may not be copied, transmitted to others or used for manufacturing purposes without the written permission of Vertech Industrial Systems. The recipient agrees to these conditions by acceptance of this drawing.

REV	DATE	DESCRIPTION	ENG	DSN
1	01/05/12	As-Built	RS	JMM
0	11/07/11	Issue For Construction	RS	MAS
A	11/03/11	Issue For Submittal	RS	MAS

System Designed For:

Spinnaker Holdings, LLC
150 Pecan St.
Denison, TX 75020-2700

Sheet Description:

Roosevelt Irrigation District Water Remediation
Well #92 RTU Control Panel RID-92
S7-1200 SM 1231 Module PLC03 - 8 Pt. Analog Input

Engineer:	Client Job ID:	Vertech Job ID:
R. Smith	DW100340	P110124
Designer:	**Creation Date:**	**Drawing Set:**
M. Szymanski	10/12/2011	RID-92
Rev: 1	**Scale:** NTS	**Sheet Size:** B	**Sheet Number:** 09 OF 14

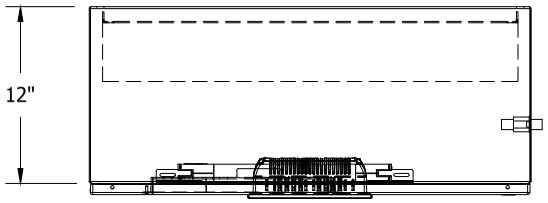

Enclosure Top View
RTU Control Panel RID-92

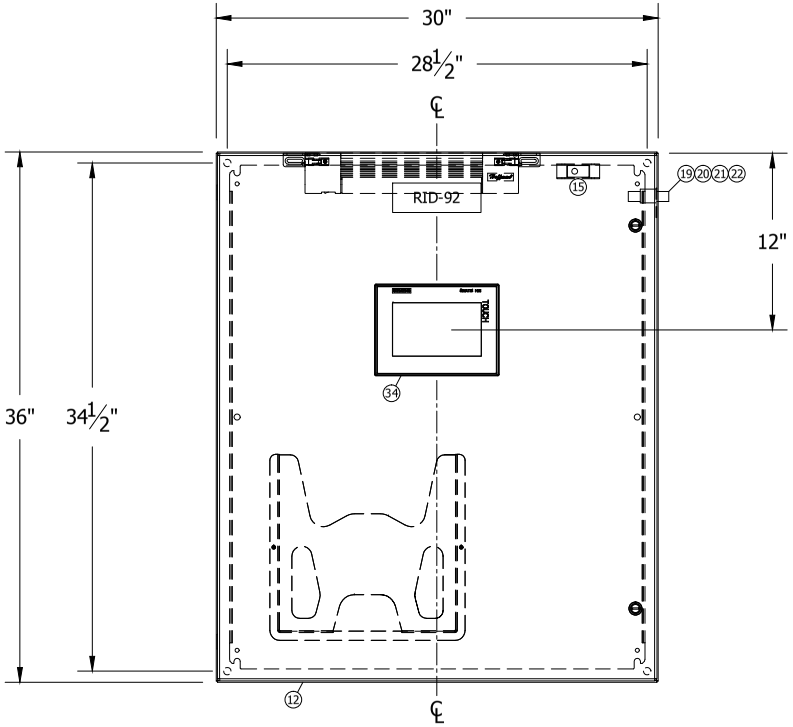

Enclosure Front Elevation
RTU Control Panel RID-92

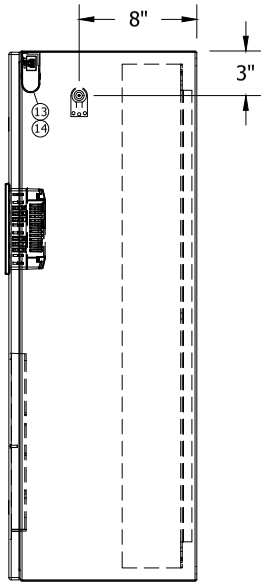

Enclosure Right Side
RTU Control Panel RID-92

P110124-RID92-10.dwg

Vertech
www.vertech.com

This document contains information which is the property of Vertech Industrial Systems and is provided on a restricted basis. It is not to be used in any way detrimental to the interests of Vertech Industrial Systems and may not be copied, transmitted to others or used for manufacturing purposes without the written permission of Vertech Industrial Systems. The recipient agrees to these conditions by acceptance of this drawing.

REV	DATE	DESCRIPTION	ENG	DSN
1	01/05/12	As-Built	RS	JMM
0	11/07/11	Issue For Construction	RS	MAS
A	11/03/11	Issue For Submittal	RS	MAS

System Designed For:

Spinnaker Holdings, LLC
150 Pecan St.
Denison, TX 75020-2700

Sheet Description:

Roosevelt Irrigation District Water Remediation
Well #92 RTU Control Panel RID-92
Enclosure Layout

Engineer: R. Smith		**Client Job ID:** DW100340	**Vertech Job ID:** P110124
Designer: M. Szymanski		**Creation Date:** 10/12/2011	**Drawing Set:** RID-92
Rev: 1	**Scale:** 1-1/2" = 1'-0"	**Sheet Size:** B	**Sheet Number:** 10 OF 14

WELL #92 RTU CONTROL PANEL RID-92 - BILL OF MATERIAL

Item	Qty.	Part Number	Description	Manufacturer
1	2	GGA5	Fuse, Time Delay, 5mmx20mm, Glass Tube, 125V, 5A	Ferraz Shawmut
2	1	WMZT1C03	Circuit breaker, UL489, 1 Pole, 10KA, Trip Curve C, 3A	Eaton
3	1	WMZT1C05	Circuit breaker, UL489, 1 Pole, 10KA, Trip Curve C, 5A	Eaton
4	1	WMZT1C08	Circuit breaker, UL489, 1 Pole, 10KA, Trip Curve C, 8A	Eaton
5	1	WMZT1C20	Circuit breaker, UL489, 1 Pole, 10KA, Trip Curve C, 20A	Eaton
6	6	GGA1	Fuse, Time Delay, 5mmx20mm, Glass Tube, 125V, 1A	Ferraz Shawmut
7	16	GGM1/4	Fuse, Fast Acting, 5mmx20mm, Glass Tube, 250V, 1/4A	Ferraz Shawmut
8	4	GGM1	Fuse, Fast Acting, 5mmx20mm, Glass Tube, 250V, 1A	Ferraz Shawmut
9	1	ALFSWD	Door switch assembly for enclosure light, remote mount	Hoffman
10	1	ATEMNO	Temperature Control Switch, 1 NO Contact, 15A Max. Resistive/2A Max. Inductive @ 120VAC, 20mA Min., 30-140°F	Hoffman
11	1	CP3630	Panel, CONCEPT Line, Painted Steel, 34.2" X 28.2", fits 36" X 30" enclosure	Hoffman
12	1	CSD363012	Enclosure, CONCEPT Line, NEMA Type 4/12, Wall Mountable, ANSI 61 Grey, 36" X 30" X 12"	Hoffman
13	1	F6T5	Florescent Light Bulb, for 15" PANELITE Enclosure Light	Hoffman
14	1	LF120V15	PANELITE Line Enclosure Lighting Package, 120VAC 50/60Hz, 0.13A, 15", Manual Switch, Bulb not Included	Hoffman
15	16'	T1-1540W	Wireway Duct & Cover, 1.5" x 4" x 72", White, Rigid PVC	Iboco
16	8'	0801733	NS 35/ 7,5 PERF 2000MM, DIN rail, 35mm, 7mm height, 5 pieces 2 meters each	Phoenix Contact
17	8	1004348	KLM-A, Terminal Strip ID Tag, Fits into End Anchor	Phoenix Contact
18	A/R	1051003	ZB6:UNBEDRUCKT, Zack Terminal Marker Strips, White, Unprinted, 10 Strips of 10 Markers	Phoenix Contact
19	1	2818135	CN-UB/MP, Mounting bracket for radio antenna surge suppressor	Phoenix Contact
20	1	2818850	CN-UB-280DC-BB, Surge suppressor for antenna cable	Phoenix Contact
21	1	2867377	RAD-CAB-RG213-40, Antenna Extension Coaxial Cable, 40ft	Phoenix Contact
22	1	2867814	Yagi Antenna Kit, 6dBi	Phoenix Contact
23	1	2885207	RAD-CON-MCX90-N-SS, Adapter Cable, Pigtail, 120cm	Phoenix Contact
24	1	2900016	RAD-ISM-900-EN-BD, Wireless Radio Transceiver with Ethernet, RS-232, RS-485, 900MHz	Phoenix Contact
25	17	3022218	CLIPFIX 35, End Anchor, Snap-on, for 35mm DIN Rail	Phoenix Contact
26	6	3030271	Cross Connector/Jumper for UT-4 Terminal Blocks, Red, 10 Position	Phoenix Contact
27	31	3036819	P-FU 5X20 LED 24, Fuse plug, 6.3A, 500V, 6.2mm, for 5x20mm glass fuses, black, BFI (12-30V), fits UT 2,5/4/6-TG terminal	Phoenix Contact
28	31	3044720	UTTB 4-TG, Terminal block, two-tier, top tier pluggable, screw connection, 26-10AWG, 6.2mm, grey	Phoenix Contact
29	16	3044759	UTTB 4-PE, Ground terminal block, two-tier, feed-through, screw connection, 26-10AWG, 6.2mm, green/yellow	Phoenix Contact
30	49	3044814	UTTB 4, Terminal block, two-tier, feed-through, screw connection, 26-10AWG, 36A, 800V, 6.2mm, grey	Phoenix Contact
31	14	3047293	D-UT 2,5/4-TWIN, Terminal cover, fits UT 2,5/4-MTD/TWIN terminal block, grey	Phoenix Contact
32	2	3047358	FBS-PV UT, Vertical potential bridge, to connect the upper and lower level of 2-tier terminals	Phoenix Contact
33	1	5602519	EM-DUO-120/20/GFI, Receptacle, Duplex, 20A, GFI, DIN Rail Mount	Phoenix Contact
34	1	6AV2124-0GC01-0AX0	Operator Interface Terminal (OIT), SIMATIC TP700 Comfort Touch Panel, Windows CE 6.0, 7" Display, 12MB Memory	Siemens
35	1	6EP1332-5BA10	Power Supply, SITOP PSU 100C, 24VDC @ 4A	Siemens
36	1	6EP1933-2EC41	DC Uninterruptible Power Supply (UPS), SITOP UPS500S	Siemens
37	1	6GK5005-0BA00-1AB2	Industrial Ethernet Switch, SCALANCE XB005, Unmanaged, 5 X 10/100MBIT/S Twisted Pair RJ45, LED-Diagnosis, IP20, 24VDC	Siemens
38	1	PK15GTA	Ground Distribution Block, 15-Terminals	Square D
39	1	C7-A20X120VAC	Control relay, QRC miniature plug-in, general purpose, 120VAC coil, DPDT, 10A contacts, LED indicator	Turck
40	10	C7-A20X24VDC	Control relay, QRC miniature plug-in, general purpose, 24VDC coil, DPDT, 10A contacts, LED indicator	Turck
41	11	S7-M	Socket for miniature relays C7 and C80 series, 8-blade, DIN rail mount, 10A, 250V, replaces former socket S7-C	Turck

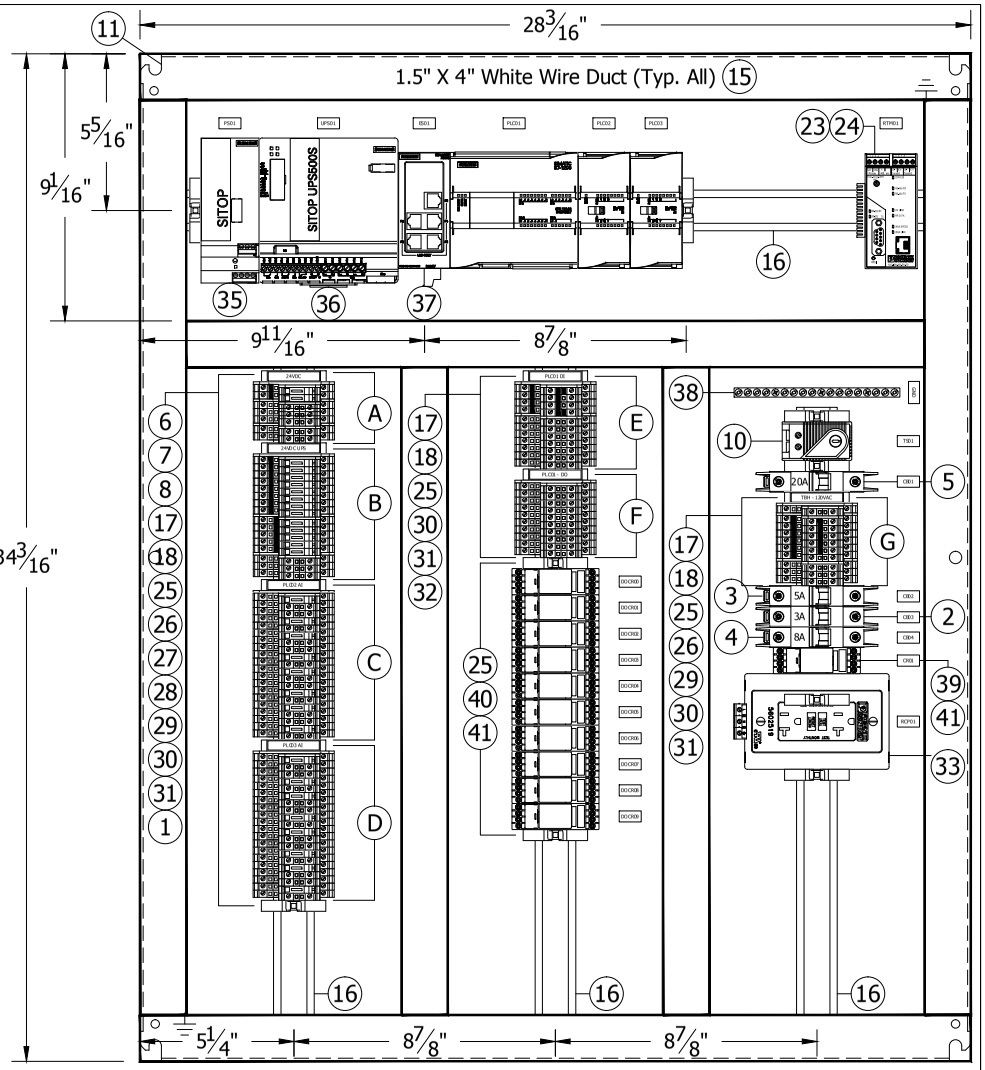

Backplate Layout
RTU Control Panel RID-92

P110124-RID92-11.dwg

Vertech
www.vertech.com

This document contains information which is the property of Vertech Industrial Systems and is provided on a restricted basis. It is not to be used in any way detrimental to the interests of Vertech Industrial Systems and may not be copied, transmitted to others or used for manufacturing purposes without the written permission of Vertech Industrial Systems. The recipient agrees to these conditions by acceptance of this drawing.

REV	DATE	DESCRIPTION	ENG	DSN
1	01/05/12	As-Built	RS	JMM
0	11/07/11	Issue For Construction	RS	MAS
A	11/03/11	Issue For Submittal	RS	MAS

System Designed For:

Spinnaker Holdings, LLC
150 Pecan St.
Denison, TX 75020-2700

Sheet Description:

Roosevelt Irrigation District Water Remediation
Well #92 RTU Control Panel RID-92
Backplate Layout
Bill of Material

Engineer: R. Smith		**Client Job ID:** DW100340	**Vertech Job ID:** P110124
Designer: M. Szymanski		**Creation Date:** 10/12/2011	**Drawing Set:** RID-92
Rev: 1	**Scale:** 3" = 1'-0"	**Sheet Size:** B	**Sheet Number:** 11 OF 14

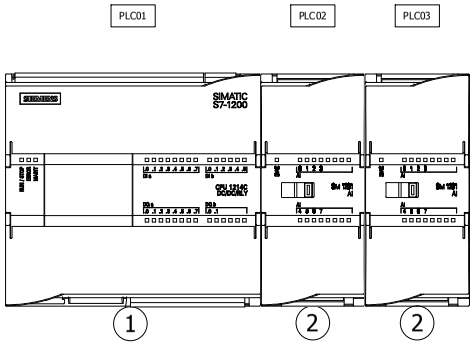

WELL #92 RTU CONTROL PANEL RID-92 - PLC RACK - BILL OF MATERIAL				
Item	Qty	Part Number	Description	Manufacturer
1	1	6ES7214-1HE30-0XB0	PLC Processor, SIMATIC S7-1200, CPU 1214C, DC/DC/RLY, 14 DI (24VDC), 10DO (Relay) 2A, 2AI (0-10VDC), Power: DC 24V, 50KB Memory	Siemens
2	2	6ES7231-4HF30-0XB0	Analog Input Module, SIMATIC S7-1200, SM 1231, 8 AI, +/-10V, +/-5V, +/-2.5V, OR 0-20 mA, 12 Bit + Sign or 13 Bit ADC	Siemens

P110124-RID92-12.dwg

Vertech

www.vertech.com

This document contains information which is the property of Vertech Industrial Systems and is provided on a restricted basis. It is not to be used in any way detrimental to the interests of Vertech Industrial Systems and may not be copied, transmitted to others or used for manufacturing purposes without the written permission of Vertech Industrial Systems. The recipient agrees to these conditions by acceptance of this drawing.

REV	DATE	DESCRIPTION	ENG	DSN
1	01/05/12	As-Built	RS	JMM
0	11/07/11	Issue For Construction	RS	MAS
A	11/03/11	Issue For Submittal	RS	MAS

System Designed For:

Spinnaker Holdings, LLC
150 Pecan St.
Denison, TX 75020-2700

Sheet Description:

Roosevelt Irrigation District Water Remediation
Well #92 RTU Control Panel RID-92
PLC Rack 0 Layout
& Bill of Material

Engineer: R. Smith		**Client Job ID:** DW100340	**Vertech Job ID:** P110124
Designer: M. Szymanski		**Creation Date:** 10/12/2011	**Drawing Set:** RID-92
Rev: 1	**Scale:** 6" = 1'-0"	**Sheet Size:** B	**Sheet Number:** 12 OF 14

24VDC Power Distribution

RTU Control Panel RID-92

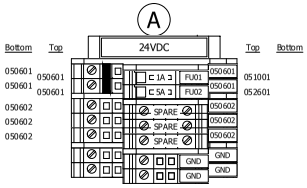

24VDC UPS Power Distribution

RTU Control Panel RID-92

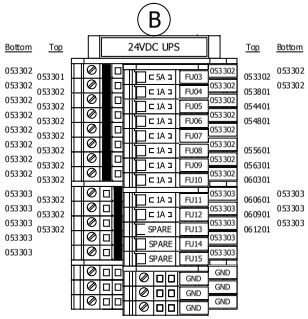

PLC02 - Analog Inputs

RTU Control Panel RID-92

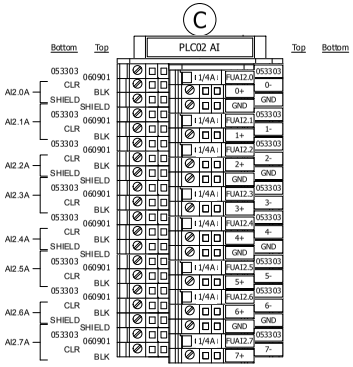

PLC03 - Analog Inputs

RTU Control Panel RID-92

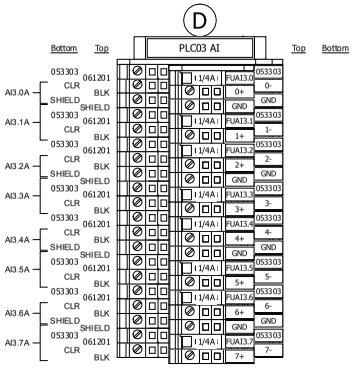

PLC01- 24VDC Discrete Inputs

RTU Control Panel RID-92

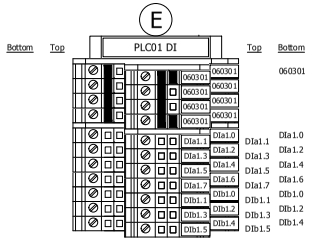

PLC01 - Relay Outputs

RTU Control Panel RID-92

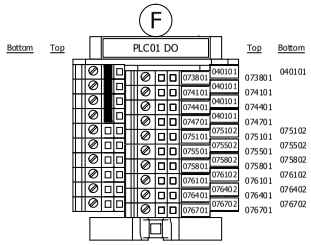

120VAC Power Distribution

RTU Control Panel RID-92

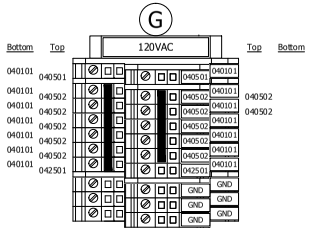

P110124-RID92-13.dwg

Vertech

www.vertech.com

This document contains information which is the property of Vertech Industrial Systems and is provided on a restricted basis. It is not to be used in any way detrimental to the interests of Vertech Industrial Systems and may not be copied, transmitted to others or used for manufacturing purposes without the written permission of Vertech Industrial Systems. The recipient agrees to these conditions by acceptance of this drawing.

REV	DATE	DESCRIPTION	ENG	DSN
1	01/05/12	As-Built	RS	JMM
0	11/07/11	Issue For Construction	RS	MAS
A	11/03/11	Issue For Submittal	RS	MAS

System Designed For:

Spinnaker Holdings, LLC
150 Pecan St.
Denison, TX 75020-2700

Sheet Description:

Roosevelt Irrigation District Water Remediation
Well #92 RTU Control Panel RID-92
Terminal Strip Layout

Engineer: R. Smith		**Client Job ID:** DW100340	**Vertech Job ID:** P110124
Designer: M. Szymanski		**Creation Date:** 10/12/2011	**Drawing Set:** RID-92
Rev: 1	**Scale:** NTS	**Sheet Size:** B	**Sheet Number:** 13 OF 14

WELL #92 RTU CONTROL PANEL RID-92 - ENGRAVING SCHEDULE						
Tag	Type	Height	Width	Surface	Core	Text Line 1
1	TAG2060	2.0	6.0	White	Black	RID-92
2	TAG038075	0.375	0.75	White	Black	GND
3	TAG038075	0.375	0.75	White	Black	CB01
4	TAG038075	0.375	0.75	White	Black	CB02
5	TAG038075	0.375	0.75	White	Black	CB03
6	TAG038075	0.375	0.75	White	Black	CB04
7	TAG038075	0.375	0.75	White	Black	N/A
8	TAG038075	0.375	0.75	White	Black	N/A
9	TAG038075	0.375	0.75	White	Black	CR01
10	TAG038075	0.375	0.75	White	Black	EL01
11	TAG038075	0.375	0.75	White	Black	RCP01
12	TAG038075	0.375	0.75	White	Black	PS01
13	TAG038075	0.375	0.75	White	Black	OIT01
14	TAG038075	0.375	0.75	White	Black	UPS01
15	TAG038075	0.375	0.75	White	Black	PLC01
16	TAG038075	0.375	0.75	White	Black	PLC02
17	TAG038075	0.375	0.75	White	Black	PLC03
18	TAG038075	0.375	0.75	White	Black	ES01
19	TAG038075	0.375	0.75	White	Black	RTM01
20	TAG038075	0.375	0.75	White	Black	TS01
21	TAG038075	0.375	0.75	White	Black	DOCR00
22	TAG038075	0.375	0.75	White	Black	DOCR01
23	TAG038075	0.375	0.75	White	Black	DOCR02
24	TAG038075	0.375	0.75	White	Black	DOCR03
25	TAG038075	0.375	0.75	White	Black	DOCR04
26	TAG038075	0.375	0.75	White	Black	DOCR05
27	TAG038075	0.375	0.75	White	Black	DOCR06
28	TAG038075	0.375	0.75	White	Black	DOCR07
29	TAG038075	0.375	0.75	White	Black	DOCR08
30	TAG038075	0.375	0.75	White	Black	DOCR09

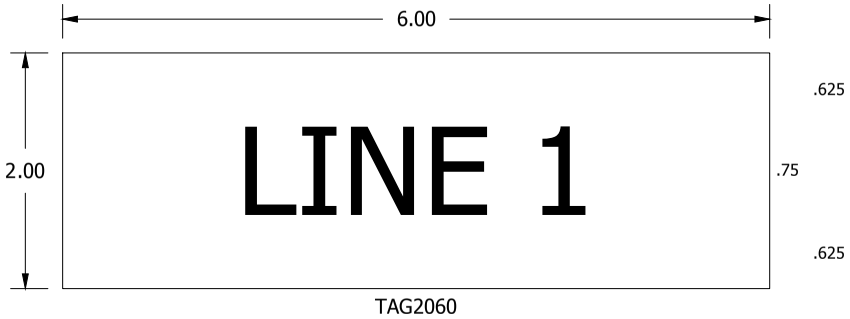

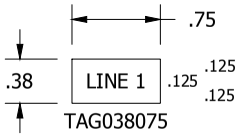

P110124-RID92-14.dwg

Vertech
www.vertech.com

This document contains information which is the property of Vertech Industrial Systems and is provided on a restricted basis. It is not to be used in any way detrimental to the interests of Vertech Industrial Systems and may not be copied, transmitted to others or used for manufacturing purposes without the written permission of Vertech Industrial Systems. The recipient agrees to these conditions by acceptance of this drawing.

REV	DATE	DESCRIPTION	ENG	DSN
1	01/05/12	As-Built	RS	JMM
0	11/07/11	Issue For Construction	RS	MAS
A	11/03/11	Issue For Submittal	RS	MAS

System Designed For:

Spinnaker Holdings, LLC
150 Pecan St.
Denison, TX 75020-2700

Sheet Description:

Roosevelt Irrigation District Water Remediation
Well #92 RTU Control Panel RID-92
Engraving Schedule

Engineer: R. Smith		**Client Job ID:** DW100340	**Vertech Job ID:** P110124
Designer: M. Szymanski		**Creation Date:** 10/12/2011	**Drawing Set:** RID-92
Rev: 1	**Scale:** 1'-0" = 1'-0"	**Sheet Size:** B	**Sheet Number:** 14 OF 14