SYNERGY ENVIRONMENTAL, LLC

APPENDIX F

Equipment Manuals

SYNERGY ENVIRONMENTAL, LLC

FLOW METERS

SIEMENS

Handbook

Edition 04/2005 - Revision 04

SITRANS F M MAGFLO®

Electromagnetic flowmeters

Sensor types MAG 1100, MAG 3100, MAG 5100 W

Transmitter types MAG 5000, MAG 6000

Technical Documentation (handbooks, instructions, manuals etc.) on the complete product range SITRANS F can be found on the internet/intranet on the following links:

English: http://www4.ad.siemens.de/WW/view/en/10806951/133300

Order no.: FDK-521H0723

SFIDK.PS.027.W4.02

Siemens Flow Instruments range of electromagnetic flowmeters

	MAG 1100	MAG 1100 FOOD	MAG 3100	MAG 3100 W	MAG 5100 W
Size [mm]	DN 2-100	DN 10-100	DN 15-2000	DN 25-1200	DN 25-1200
Connection	Flangeless (Sandwich design)	Weld-in adapter, clamp adapter, thread adapter	Flange	Flange	Flange
Pressure [bar]	Max. 40	Max. 40	Max. 100	Max. 40	Max. 40
Temperature [°C]	–20 to 200	–30 to 150	–40 to180	–10 to 95	–5 to 90
Liner	Zirconium oxide (Z_rO_2) Ceramic (Al_2O_3), PFA	Ceramic (Al_2O_3), PFA	Neoprene, EPDM, Teflon (PTFE), Ebonite, Linatex®	Neoprene and EPDM	DN 25-40 & DN 350-1200 hard elastomer DN 50-300 composite elastomer
Electrodes	Platinum Hastelloy C276	Platinum Hastelloy	AISI 316 Ti, Hastelloy C, Platinum/Iridium, Titanium, Tantalum, PE electrodes	AISI 316 Ti, PE electrodes	AISI 316 Ti, PE electrodes
Enclosure	IP 67	IP 67	IP 67/IP 68	IP 67/IP 68	IP 67/IP 68
Ex-version	EEx [ia] [ib] IIB T4-T6		EEx e ia IIC T3-T6 EEx d [ia] [ib] IIB T4-T6		

	MAG 5000	MAG 6000
Outputs	1 current output 1digital output 1 relay output	1 current output 1digital output 1 relay output
Flow direction	Uni/bidirectional	Uni/bidirectional
Communication	Optional HART®	Add-on modules
Display	3 lines 20 characters (optional without display)	3 lines 20 characters (optional without display)
Meter uncertainty	±0,5% o.r.	±0,25% o.r.
Enclosure	IP 67, IP 20	IP 67, IP 20
Custody transfer approval	PTB (cold water)	PTB OIML R75 OIML R117
Ex-version Safety barrier 19"	[EEx ia] IIC	[EEx ia ib] IIB [EEx ia] IIC
Power supply	12-24 V AC/DC 115-230 V AC	12-24 V AC/DC 115-230 V AC
Batch	No	Yes

	MAG 6000 Industry	MAG 8000 W
Refer to	Operating manual SFIDK.PS.026.E1.02	Operating manual SFIDK.PS.026.D2.02

Technical data

2.4 Sensor MAG 5100 W

Type	Sensor with flanges		
Design	Straight	Coned 1 DN reduction	Straight
Nominal size *mm*	25-40	50-300	350-1200
Liner	Hard elastomer (hard rubber)[3]	Composite elastomer (hard & soft rubber)[3]	Hard elastomer (hard rubber)[3]
Liner approvals	WRc	WRc	WRc
Medium temperature	–5 to 70°C[1]		
Ambient temperature Remote transmitter	–40 to 100°C		
Compact transmitter	–20 to 50°C		
Operating pressure	0.01 to 40 bar	0.03 to 20 bar	0.01 to 16 bar
Excitation frequency	12.5 Hz	50-65 mm: 12.5 Hz	3.125 Hz
		80-150 mm: 6.25 Hz	
		200-300 mm: 3.125 Hz	
Enclosure rating *Standard*	IP 67 to EN 60529 1 m w.g. for 30 minutes		
Option	IP 68 to EN 60529 10 m w.g. continuously		
Cable entries	4 Pg 13.5		
Mechanical load	18-1000 Hz random, 3.17 G rms in all directions to EN 60068-2-36		
Test pressure	1.5 × nominal pressure		
Flanges EN 1092-1 *Standard*	PN 40	50-150 mm: PN 16	PN 10
		200-300 mm: PN 10	
Option		200-300 mm: PN 16	PN 16
ANSI B16.5 *Standard*	Class 150 lb	Class 150 lb	14"-24": Class 150 lb
AWWA C-207 Standard			28"-48": Class D
Pressure drop at 3 m/sec.	As straight pipe	Max. 25 mbar	As straight pipe
Electrodes	AISI 316 Ti (1.4571)		
PE/grounding electrodes *Standard*	AISI 316 Ti (1.4571)		
Measuring pipe/meter body	AISI 304 (1.4301)	Composite elastomer	AISI 304 (1.4301)
Flanges	Carbon steel		
Housing	Carbon steel		
Surface finish	Two component epoxy min. 150 microns	Polyester powder coat min. 100 microns	Two component epoxy min. 150 microns
Colour	Siemens 700 light basic		
Approvals *Conforms to*	PED - 97/23EC, LVD - 73/23 EEC + amendment 93/68/EEC, EMC - 89/336 EEX[2]		

[1]) Peak temperature up to +90°C (194°F) in periods < 1 hour
[2]) For sizes greater than 600 mm PED conformity is available as a cost added option, the basic unit will only carry the LVD (Low Voltage Directive) and EMC approval.
[3]) Nitrile, NBR

2.5.1 Transmitter MAG 5000 (DN 2 to DN 1200)

	Accuracy 0.5%
Current output	
Current	0-20 mA, 4-20 mA or 4-20 mA + alarm
Load	< 800 ohm
Time constant	0.1-30 s adjustable
Digital output	
Frequency	0-10 kHz, 50% duty cycle
Time constant	0.1-30 s adjustable
Active	24 V DC, 30 mA, 1 KΩ ≤ R_{load} ≤ 10 KΩ, short-circuit-protected
Passive	3-30 V DC, max. 110 mA, 200 Ω ≤ R_{load} ≤ 10 KΩ
Relay Time constant	Changeover relay, time constant same as current time constant
Load	42 V AC/2 A, 24 V DC/1A
Digital input	11-30 V DC, R_i = 4.4 KΩ
Activation time	50 ms
Current	$I_{11\ V\ DC}$ = 2.5 mA, $I_{30\ V\ DC}$ = 7 mA
Functions	Flow rate, 2 totalizers, low flow cut-off, empty pipe cut-off [1]), flow direction, error system, operating time, uni/bidirectional flow, limit switches, pulse output, control for cleaning unit
Galvanic isolation	All inputs and outputs are galvanically isolated
Cut-off Low flow	0-9.9% of maximum flow
Empty pipe	Detection of empty pipe, special cable required in separate mounted installation
Totalizer	Two eight-digit counters for forward, net or reverse flow
Display	Background illumination with alphanumerical text, 3 × 20 characters to indicate flow rate, totalized values, settings and faults
	Reverse flow indicated by negative sign
Time constant	Time constant as current output time constant
Zero point adjustment	Automatic
Electrode input impedance	> 1 x 10^{14} Ω
Excitation frequency	Sensor size depending pulsating DC current (125 mA)
Ambient temperature	Display version during operation: –20 to +50°C
	Blind version during operation: –20 to +60°C
	During storage: –40 to +70°C (RH max. 95%)
Custody transfer approval MAG 5000 CT	PTB (cold water) 6.221 99.19
Communication	
Standard	Without serial communication
Optional	HART®
Compact	
Enclosure material	Fibre glass-reinforced polyamide
Enclosure rating	IP 67 to EN 60529 and DIN 40050 (1 m w.g. for 30 minutes)
Mechanical load	18-1000 Hz random, 3.17 G rms in all directions to EN 60068-2-36
19" insert	
Enclosure material	Standard 19" insert of aluminium/steel (DIN 41494)
	Width: 21 TE
	Height: 3 HE
Enclosure rating	IP 20 to EN 60529 and DIN 40050
Mechanical load	Version: 1 G, 1-800 Hz sinusoidal in all directions to EN 60068-2-36
EMC performance	Emission: EN 50081-1 (Light industry)
	Immunity: EN 50082-2 (Industry)
Supply voltage	115-230 V AC +10% to –15%, 50-60 Hz
	11-30 V DC or 11-24 V AC
Power consumption	230 V AC: 17 VA
	24 V DC: 9 W, I_N = 380 mA, I_{ST} = 8 A (30 ms)
	12 V DC: 11 W, I_N = 920 mA, I_{ST} = 4 A (250 ms)

[1]) **Not** remote Ex, **not** DN 2, 3

D & W

4.3 Sensor MAG 5100 W

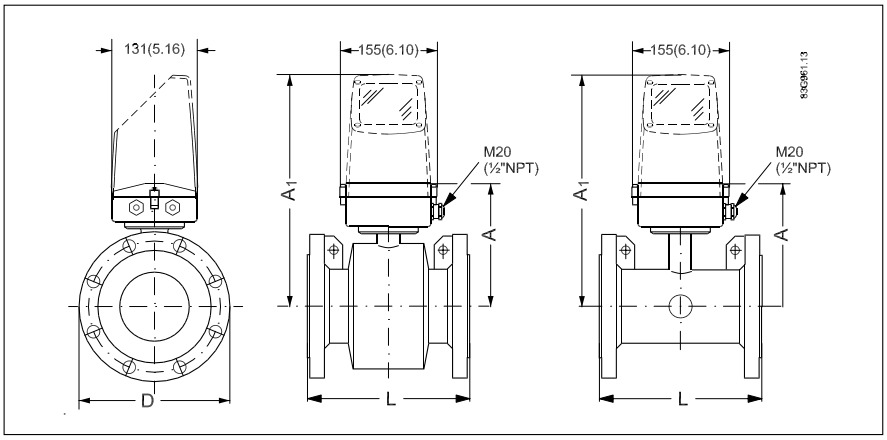

Nominal size		A		L									
				PN 10		PN 16		PN 40		Class 150		AWWA	
mm	inch	mm	inch	mm	inch	mm	inch	mm	inch	mm	inch	mm	inch
25	1"	187	7.4	N/A	N/A	N/A	N/A	200	7.9	200	7.9	N/A	N/A
40	1½"	197	7.8	N/A	N/A	N/A	N/A	200	7.9	200	7.9	N/A	N/A
50	2"	188	7.4	N/A	N/A	200	7.9	N/A	N/A	200	7.9	N/A	N/A
65	2½"	194	7.6	N/A	N/A	200	7.9	N/A	N/A	200	7.9	N/A	N/A
80	3"	200	7.9	N/A	N/A	200	7.9	N/A	N/A	200	7.9	N/A	N/A
100	4"	207	8.1	N/A	N/A	250	9.8	N/A	N/A	250	9.8	N/A	N/A
125	5"	217	8.5	N/A	N/A	250	9.8	N/A	N/A	250	9.8	N/A	N/A
150	6"	232	9.1	N/A	N/A	300	11.8	N/A	N/A	300	11.8	N/A	N/A
200	8"	257	10.1	350	13.8	350	13.8	N/A	N/A	350	13.8	N/A	N/A
250	10"	284	11.2	450	17.7	450	17.7	N/A	N/A	450	17.7	N/A	N/A
300	12"	310	12.2	500	19.7	500	19.7	N/A	N/A	500	19.7	N/A	N/A
350	14"	382	15.0	550	21.7	550	21.7	N/A	N/A	550	21.7	N/A	N/A
400	16"	407	16.0	600	23.6	600	23.6	N/A	N/A	600	23.6	N/A	N/A
450	18"	438	17.2	600	23.6	600	23.6	N/A	N/A	600	23.6	N/A	N/A
500	20"	463	18.2	600	23.6	600	23.6	N/A	N/A	600	23.6	N/A	N/A
600	24"	514	20.2	600	23.6	600	23.6	N/A	N/A	600	23.6	N/A	N/A
700	28"	564	22.2	700	27.6	700	27.6	N/A	N/A	N/A	N/A	700	27.6
750	30"	591	23.3	N/A	N/A	N/A	N/A	N/A	N/A	N/A	N/A	750	29.5
800	32"	616	24.3	800	31.5	800	31.5	N/A	N/A	N/A	N/A	800	31.5
900	36"	663	26.1	900	35.4	900	35.4	N/A	N/A	N/A	N/A	900	35.4
1000	40"	714	28.1	1000	39.4	1000	39.4	N/A	N/A	N/A	N/A	1000	39.4
	42"	714	28.1	N/A	N/A	N/A	N/A	N/A	N/A	N/A	N/A	1000	39.4
1100	44"	765	30.1	N/A	N/A	N/A	N/A	N/A	N/A	N/A	N/A	1100	43.3
1200	48"	820	32.3	1200	47.2	1200	47.2	N/A	N/A	N/A	N/A	1200	47.2

New dimension from DN 350 to DN 1200

Will be discontinued

350	14"	362	14.3	550	21.7	550	21.7	N/A	N/A	550	21.7	N/A	N/A
400	16"	387	15.2	600	23.6	600	23.6	N/A	N/A	600	23.6	N/A	N/A
450	18"	418	16.5	600	23.6	600	23.6	N/A	N/A	600	23.6	N/A	N/A
500	20"	443	17.4	625	24.6	625	24.6	N/A	N/A	680	26.8	N/A	N/A
600	24"	494	19.4	750	29.5	750	29.5	N/A	N/A	820	32.3	N/A	N/A
700	28"	544	21.4	875	34.4	875	34.4	N/A	N/A	N/A	N/A	875	34.4
750	30"	571	22.5	N/A	N/A	N/A	N/A	N/A	N/A	N/A	N/A	937	36.9
800	32"	606	23.9	1000	39.4	1000	39.4	N/A	N/A	N/A	N/A	1000	39.4
900	36"	653	25.7	1125	44.3	1125	44.3	N/A	N/A	N/A	N/A	1125	44.3
1000	40"	704	27.7	1250	49.2	1250	49.2	N/A	N/A	N/A	N/A	1250	49.2
	42"	704	27.7	N/A	N/A	N/A	N/A	N/A	N/A	N/A	N/A	1250	49.2
1100	44"	755	29.7	N/A	N/A	N/A	N/A	N/A	N/A	N/A	N/A	1375	54.1
1200	48"	810	31.9	1500	59.1	1500	59.1	N/A	N/A	N/A	N/A	1500	59.1

D = Outside diameter of flange, see flange tables

MAG 5100 W weight

New weight from DN 350 to DN 1200

Nominal size		PN 10		PN 16		PN 40		Class 150		AWWA	
mm	inch	kgs	lbs	kgs	lbs	kgs	lbs	kgs	lbs	kgs	lbs
25	1"	N/A	N/A	N/A	N/A	4	9	4	9	N/A	N/A
40	1½"	N/A	N/A	N/A	N/A	7	15	6	13	N/A	N/A
50	2"	N/A	N/A	9	20	N/A	N/A	8	20	N/A	N/A
65	2½"	N/A	N/A	10.7	24	N/A	N/A	11	24	N/A	N/A
80	3"	N/A	N/A	11.6	26	N/A	N/A	13	28	N/A	N/A
100	4"	N/A	N/A	15.2	33	N/A	N/A	19	41	N/A	N/A
125	5"	N/A	N/A	20.4	45	N/A	N/A	24	52	N/A	N/A
150	6"	N/A	N/A	26	57	N/A	N/A	29	64	N/A	N/A
200	8"	48	106	48	106	N/A	N/A	56	124	N/A	N/A
250	10"	64	141	69	152	N/A	N/A	79	174	N/A	N/A
300	12"	76	167	86	189	N/A	N/A	110	243	N/A	N/A
350	14"	104	229	125	274	N/A	N/A	139	307	N/A	N/A
400	16"	119	263	143	314	N/A	N/A	159	351	N/A	N/A
450	18"	136	299	173	381	N/A	N/A	182	400	N/A	N/A
500	20"	163	359	223	491	N/A	N/A	225	495	N/A	N/A
600	24"	236	519	338	744	N/A	N/A	320	704	N/A	N/A
700	28"	270	595	314	692	N/A	N/A	N/A	N/A	273	602
750	30"	N/A	N/A	N/A	N/A	N/A	N/A	N/A	N/A	329	725
800	32"	346	763	396	873	N/A	N/A	N/A	N/A	365	804
900	36"	432	951	474	1043	N/A	N/A	N/A	N/A	495	1089
1000	40"	513	1130	600	1321	N/A	N/A	N/A	N/A	583	1282
	42"	N/A	N/A	N/A	N/A	N/A	N/A	N/A	N/A	687	1512
1100	44"	N/A	N/A	N/A	N/A	N/A	N/A	N/A	N/A	763	1680
1200	48"	643	1415	885	1948	N/A	N/A	N/A	N/A	861	1896

Will be discontinued

350	14"	100	220	116	255	N/A	N/A	131	289	N/A	N/A
400	16"	127	280	144	317	N/A	N/A	165	364	N/A	N/A
450	18"	152	335	178	393	N/A	N/A	176	388	N/A	N/A
500	20"	184	405	232	512	N/A	N/A	235	518	N/A	N/A
600	24"	258	568	343	736	N/A	N/A	345	761	N/A	N/A
700	28"	315	693	350	772	N/A	N/A	N/A	N/A	309	681
750	30"	N/A	N/A	N/A	N/A	N/A	N/A	N/A	N/A	480	1058
800	32"	410	904	442	975	N/A	N/A	N/A	N/A	421	928
900	36"	512	1129	550	1213	N/A	N/A	N/A	N/A	539	1188
1000	40"	650	1433	732	1614	N/A	N/A	N/A	N/A	670	1477
	42"	N/A	N/A	N/A	N/A	N/A	N/A	N/A	N/A	700	1544
1100	44"	N/A	N/A	N/A	N/A	N/A	N/A	N/A	N/A	1100	2426
1200	48"	990	2183	1106	2439	N/A	N/A	N/A	N/A	1030	2271

The effect of temperature on working pressure MAG 5100 W

Metric (Pressures in bar)					
Sizes 25 mm, 40 mm & > 300 mm					
Flange spec.	**Flange rating**	**Temperature °C**			
		–5	10	50	90
EN 1092-1	PN 10	10.0	10.0	9.7	9.4
	PN 16	16.0	16.0	15.5	15.1
	PN 40	40.0	40.0	38.7	37.7
ANSI B16.45	150 lb	19.7	19.7	19.3	18.0
AWWA C-207	Class D	10.3	10.3	10.3	10.3
Sizes 50 mm to 300 mm					
EN 1092-1	PN 10	10.0	10.0	10.0	8.2
	PN 16	10.0	16.0	16.0	13.2
	PN 40	10.0	40.0	40.0	32.9
ANSI B16.45	150 lb	10.0	19.7	19.7	16.2

Imperial (Pressures in Psi)					
Sizes 1", 1½", & > 12"					
Flange spec.	**Flange rating**	**Temperature °F**			
		23	50	120	200
EN 1092-1	PN 10	145	145	141	136
	PN 16	232	232	225	219
	PN 40	580	580	561	547
ANSI B16.45	150 lb	286	286	280	261
AWWA C-207	Class D	150	150	150	150
Sizes 2" to 12"					
EN 1092-1	PN 10	145	145	145	119
	PN 16	145	232	232	191
	PN 40	145	580	580	477
ANSI B16.45	150 lb	145	286	286	235

9. Service

Often problems with unstable/wrong measurements occur due to insufficient/wrong earthing or potential equalization. Please check this connection. If OK, the SITRANS F M MAGFLO® transmitter can be checked as described under 9.1 and sensor under 9.3.

9.1 Transmitter check list

When checking SITRANS F M MAGFLO® installations for malfunction the easiest method to check the transmitter is to replace it with another MAG 5000/6000 transmitter with a similar power supply.
A replacement can easily be done as all settings are stored in and downloaded from the SENSORPROM® unit - no extra settings need to be made.

If no spare transmitter is available - then check transmitter according to check table.

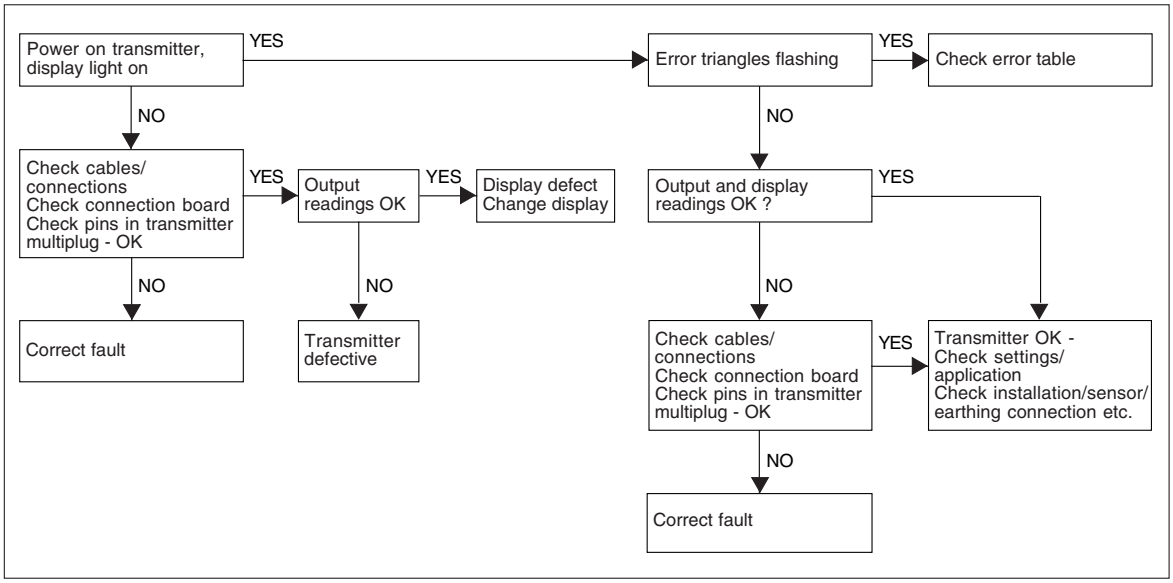

9.2 Trouble shooting MAG transmitter

Symptom	Output signals	Error code	Cause	Remedy
Empty display	Minimum		1. No power supply	Power supply Check MAG 5000/6000 for bended pins on the connector
			2. MAG 5000/6000 defective	Replace MAG 5000/6000
No flow signal	Minimum		1. Current output disabled	Turn on current output
			2. Digital output disabled	Turn on digital output
			3. Reverse flow direction	Change direction
		F70	Incorrect or no coil current	Check cables/connections
		W31	Measuring pipe empty	Ensure that the measuring pipe is full
		F60	Internal error	Replace MAG 5000/6000
	Undefined	P42	1. No load on current output	Check cables/connections
			2. MAG 5000/6000 defective	Replace MAG 5000/6000
		P41	Initializing error	Switch off MAG 5000/6000, wait 5 s and switch on again
Indicates flow with no flow in pipe	Undefined		Measuring pipe empty	Select empty pipe cut-off
			Empty pipe cut-off is OFF	Ensure that the measuring pipe is full
			Electrode connection missing/ electrode cable is insufficiently screened	Ensure that electrode cable is connected and sufficiently screened
Unstable flow signal	Unstable		1. Pulsating flow	Increase time constant
			2. Conductivity of medium too low	Use special electrode cable
			3. Electrical noise potential between medium and sensor	Ensure sufficient potential equalization
			4. Air bubbles in medium	Ensure medium does not contain air bubbles
			5. High concentration of particles or fibres	Increase time constant
Measuring error	Undefined		Incorrect installation	Check installation
		P40	No SENSORPROM® unit	Install SENSORPROM® unit
		P44	CT SENSORPROM® unit	Replace SENSORPROM® unit or reset SENSORPROM® unit with MAG CT transmitter
		F61	Deficient SENSORPROM® unit	Replace SENSORPROM® unit
		F62	Wrong type of SENSORPROM® unit	Replace SENSORPROM® unit
		F63	Deficient SENSORPROM® unit	Replace SENSORPROM® unit
		F71	Loss of internal data	Replace MAG 5000/6000
	Maximum	W30	Flow exceeds 100% of $Q_{max.}$	Check $Q_{max.}$ (Basic Settings)
		W21	Pulse overflow • Volume/pulse too small • Pulse width too large	 Change volume/pulse Change pulse width
Measuring approx. 50%			Missing one electrode connection	Check cables
Loss of totalizer data	OK	W20	Initializing error	Reset totalizer manually
##### Signs in display	OK		Totalizer roll over	Reset totalizer or increase totalizer unit

9.3 Check list MAG sensor

ATTENTION!
If there is leakage from MAG 1100/3100/3100 W or MAG 5100 W and the unit has been used to measure inflammable/explosive liquids, there might be a risk of explosion when checking with a megger.

Disconnect all leads to MAG 1100/3100/3100 W or MAG 5100 W

MAG 1100/3100/3100 W or MAG 5100 W installed and filled with the medium:

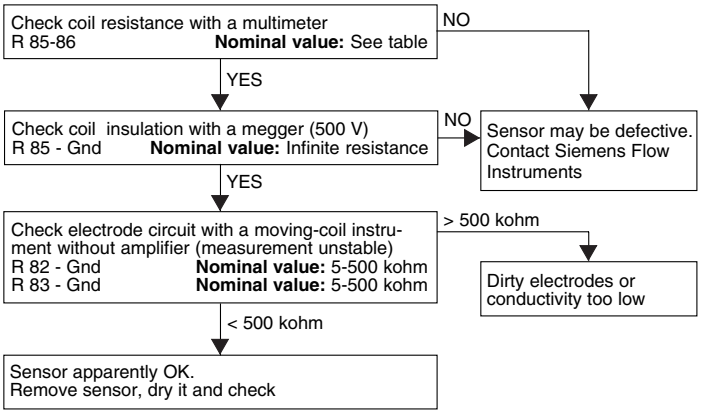

MAG 1100/3100/3100 W or MAG 5100 W removed from system – empty and dry:

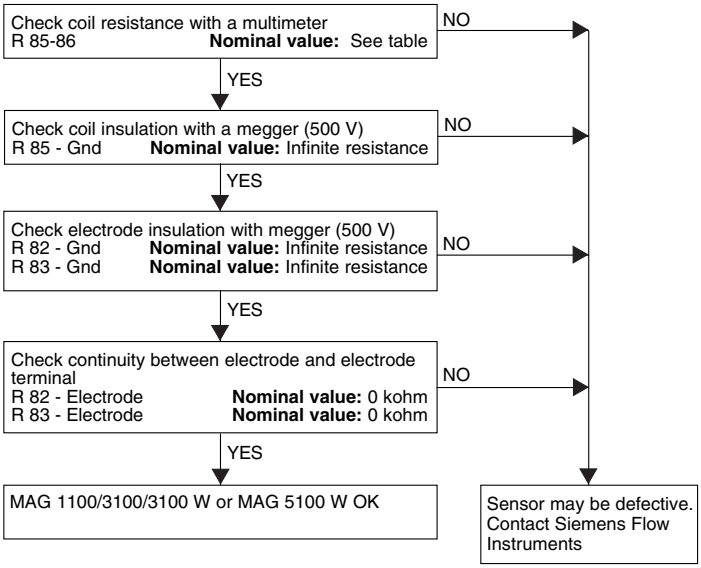

9.4 Coil resistance

	Coil resistance						
	MAG 1100	MAG 3100		MAG 3100 W		MAG 5100 W	
DN	Resistance	Resistance	Tolerance	Ohms	Tolerance	Ohms	Tolerance
2	104 Ω +/– 5	104					
3	104 Ω +/– 5	104					
6	98 Ω +/– 4	104					
10	98 Ω +/– 4	104					
15 [1])	98 Ω +/– 4	104					
25	98 Ω +/– 4	104	+/– 2	104	+/– 2	104	+/– 2
40	98 Ω +/– 4	92	+/– 2	92	+/– 2	92	+/– 2
50	98 Ω +/– 4	92	+/– 2	92	+/– 2	124	+/– 4
65	98 Ω +/– 4	100	+/– 2	100	+/– 2	127	+/– 4
80	98 Ω +/– 4	94	+/– 2	94	+/– 2	126	+/– 4
100	98 Ω +/– 4	92	+/– 2	92	+/– 2	125	+/– 4
125		92	+/– 2	92	+/– 2	126	+/– 4
150		94	+/– 2	94	+/– 2	116	+/– 4
200		90	+/– 2	90	+/– 2	109	+/– 4
250		92	+/– 2	92	+/– 2	104	+/– 4
300		100	+/– 2	100	+/– 2	108	+/– 4
350		112	+/– 2	112	+/– 2	112	+/– 2
400		100	+/– 4	100	+/– 4	100	+/– 4
450		108	+/– 4	108	+/– 4	108	+/– 4
500		122	+/– 4	122	+/– 4	122	+/– 4
600		115	+/– 4	114	+/– 4	114	+/– 4
700		128	+/– 4	112	+/– 4	112	+/– 4
750		133					
800		128	+/– 4	127	+/– 4	127	+/– 4
900		131	+/– 4	93	+/– 4	93	+/– 4
1000		131	+/– 4	103	+/– 4	103	+/– 4
1100		126					
1200		130	+/– 4	124	+/– 4	124	+/– 4
1400		130					
1500		124					
1600		133					
1800		133					
2000		147					

[1]) On MAG 1100 DN 15 produced as from May 1999 the coil resistance must be 86 ohm, +8/–4 ohm.

All resistance values are at 20 °C.
The resistance changes proportionally 0.4% / °C.

10. Ordering

Please look on our homepage **http://www.siemens.com/flow** under "Product Selector".

SYNERGY ENVIRONMENTAL, LLC

PRESSURE TRANSMITTERS

Overview

The SITRANS P200 pressure transmitter measures the gauge and absolute pressure of liquids, gases and vapors.

- Ceramic measuring cell
- Gauge and absolute measuring ranges 1 to 60 bar (15 to 1000 psi)
- For general applications

Benefits

- High measuring accuracy
- Rugged stainless steel enclosure
- High overload withstand capability
- For aggressive and non-aggressive media
- For measuring the pressure of liquids, gases and vapors
- Compact design

Application

The SITRANS P200 pressure transmitter for gauge and absolute pressure is used in the following industrial areas:

- Mechanical engineering
- Shipbuilding
- Power engineering
- Chemical industry
- Water supply

Design

Device structure without explosion protection

The pressure transmitter consists of a piezoresistive measuring cell with a diaphragm installed in a stainless steel enclosure. It can be used with a connector per EN 175301-803-A (IP65), a round plug M12 (IP67), a cable (IP67) or a cable quick screw connection (IP67) connected electrically. The output signal is between 4 and 20 mA or 0 and 10 V.

Device structure with explosion protection

The pressure transmitter consists of a piezoresistive measuring cell with a diaphragm installed in a stainless steel enclosure. It can be used with a connector per EN 175301-803-A (IP65) or a round plug M12 (IP67) connected electrically. The output signal is between 4 and 20 mA.

Function

The pressure transmitter measures the gauge and absolute pressure of liquids and gases as well as the level of liquids.

Mode of operation

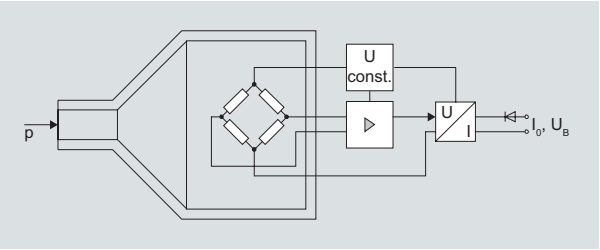

SITRANS P200 pressure transmitters (7MF1565-...), functional diagram

The ceramic measuring cell has a thin-film resistance bridge to which the operating pressure p is transmitted through a ceramic diaphragm.

The voltage output from the measuring cell is converted by an amplifier into an output current of 4 to 20 mA or an output voltage of 0 to 10 V DC.

The output current and voltage are linearly proportional to the input pressure.

2

Technical specifications

Application	
Gauge and absolute pressure measurement	Liquids, gases and vapors
Mode of operation	
Measuring principle	Piezo-resistive measuring cell (ceramic diaphragm)
Measured variable	Gauge and absolute pressure
Inputs	
Measuring range	
• Gauge pressure - Metric - US measuring range	 1 … 60 bar g (15 … 870 psi g) 15 … 1000 psi g
• Absolute pressure - Metric - US measuring range	 0.6 … 16 bar a (10 … 232 psi a) 10 … 300 psi a
Output	
Current signal	4 ... 20 mA
• Load	$(U_B$ - 10 V) / 0.02 A
• Auxiliary power U_B	DC 7 ... 33 V (10 ... 30 V for Ex)
Voltage signal	0 ... 10 V DC
• Load	≥ 10 kΩ
• Auxiliary power U_B	12 ... 33 V DC
• Power consumption	< 7 mA at 10 kΩ
Characteristic curve	Linear rising
Measuring accuracy	
Error in measurement at 25 °C (77 °F), including conformity error, hysteresis and repeatability	• Typical: 0.25 % of full-scale value • Maximum: 0.5 % of full-scale value
Setting time T99	< 0.1 s
Long-term drift	
• Lower range value and measuring span	0.25 % of full-scale value/year
Influence of ambient temperature	
• Lower range value and measuring span	0.25 %/10 K of full-scale value
• Influence of power supply	0.005 %/V
Conditions of use	
Process temperature with gasket made of:	
• FPM (Standard)	-15 ... +125 °C (+5 ... +257 °F)
• Neoprene	-35 ... +100 °C (-31 ... +212 °F)
• Perbunan	-20 ... +100 °C (-4 ... +212 °F)
• EPDM	-40 ... +145 °C (-40 ... +293 °F), usable for drinking water
Ambient temperature	-25 ... +85 °C (-13 ... +185 °F)
Storage temperature	-50 ... +100 °C (-58 ... +212 °F)
Degree of protection (to EN 60529)	• IP 65 with connector per EN 175301-803-A • IP 67 with M12 connector • IP 67 with cable • IP 67 with cable quick screw connection
Electromagnetic compatibility	• acc. EN 61326-1/-2/-3 • acc. NAMUR NE21, only for ATEX versions and with a max. measuring deviation ≤ 1 %

Design	
Weight	Approx. 0.090 kg (0.198 lb)
Process connections	See dimension drawings
Electrical connections	• Connector per EN 175301-803-A Form A with cable inlet M16x1.5 or ½-14 NPT or Pg 11 • M12 connector • 2 or 3-wire (0.5 mm^2) cable (Ø ± 5.4 mm) • Cable quick screw connection
Wetted parts materials	
• Measuring cell	Al_2O_3 - 96 %
• Process connection	Stainless steel, mat. No. 1.4404 (SST 316 L)
• Gasket	• FPM (Standard) • Neoprene • Perbunan • EPDM
Non-wetted parts materials	
• Enclosure	Stainless steel, mat. No. 1.4404 (SST 316 L)
• Rack	Plastic
• Cables	PVC
Certificates and approvals	
Classification according to pressure equipment directive (PED 97/23/EC)	For gases of fluid group 1 and liquids of fluid group 1; complies with requirements of article 3, paragraph 3 (sound engineering practice)
Lloyds Register of Shipping (LR)	Applied
Germanischer Lloyds Register of Shipping (GL)	Applied
American Bureau of Shipping (ABS)	Applied
Bureau Veritas (BV)	Applied
Det Norske Veritas (DNV)	Applied
Drinking water approval (ACS)	Applied
GOST	Applied
Explosion protection	
Intrinsic safety "i" (only with current output)	Ex II 1/2 G Ex ia IIC T4 Ga/Gb Ex II 1/2 D Ex ia IIIC T125 °C Da/Db
EC type-examination certificate	SEV 10 ATEX 0146
Connection to certified intrinsically-safe resistive circuits with maximum values:	U_i ≤ 30 V DC; I_i ≤ 100 mA; P_i ≤ 0.75 W
Effective internal inductance and capacity for versions with plugs per EN 175301-803-A and M12	L_i = 0 nH; C_i = 0 nF

Selection and ordering data

SITRANS P 200 pressure transmitters for pressure and absolute pressure for general applications
Characteristic curve deviation typ. 0.25 %
Wetted parts materials: Ceramic and stainless steel + sealing material
Non-wetted parts materials: stainless steel

Order No. 7MF1565 - ■■■■■ - ■■■■ Order code ■■■

Measuring range		Overload limit Min.		Overload limit Max.		Burst pressure			Order code
For gauge pressure									
0 ... 1 bar g	(0 ... 14.5 psi g)	-0.4 bar g	(-5.8 psi g)	2.5 bar g	(36.26 psi g)	> 2,5 bar g	(> 36.3 psi g)	▶	3BA
0 ... 1.6 bar g	(0 ... 23.2 psi g)	-0.4 bar g	(-5.8 psi g)	4 bar g	(58.02 psi g)	> 4 bar g	(> 58.0 psi g)	▶	3BB
0 ... 2.5 bar g	(0 ... 36.3 psi g)	-0.8 bar g	(-11.6 psi g)	6.25 bar g	(90.65 psi g)	> 6,25 bar g	(> 90.7 psi g)	▶	3BD
0 ... 4 bar g	(0 ... 58.0 psi g)	-0.8 bar g	(-11.6 psi g)	10 bar g	(145 psi g)	> 10 bar g	(> 145 psi g)	▶	3BE
0 ... 6 bar g	(0 ... 87.0 psi g)	-1 bar g	(-14.5 psi g)	15 bar g	(217 psi g)	> 15 bar g	(> 217 psi g)	▶	3BG
0 ... 10 bar g	(0 ... 145 psi g)	-1 bar g	(-14.5 psi g)	25 bar g	(362 psi g)	> 25 bar g	(> 362 psi g)	▶	3CA
0 ... 16 bar g	(0 ... 232 psi g)	-1 bar g	(-14.5 psi g)	40 bar g	(580 psi g)	> 40 bar g	(> 580 psi g)	▶	3CB
0 ... 25 bar g	(0 ... 363 psi g)	-1 bar g	(-14.5 psi g)	62.5 bar g	(906 psi g)	> 62,5 bar g	(> 906 psi g)	▶	3CD
0 ... 40 bar g	(0 ... 580 psi g)	-1 bar g	(-14.5 psi g)	100 bar g	(1450 psi g)	> 100 bar g	(> 1450 psi g)	▶	3CE
0 ... 60 bar g	(0 ... 870 psi g)	-1 bar g	(-14.5 psi g)	150 bar g	(2175 psi g)	> 150 bar g	(> 2175 psi g)	▶	3CG
Other version, add order code and plain text: Measuring range: ... up to... bar (psi g)									9AA H1Y
For absolute pressure									
0 ... 600 bar a	(0 ... 8.7 psi a)	0 bar a	(0 psi a)	3 bar a	(43.51 psi a)	> 2,5 bar a	(> 36.3 psi a)		5AG
0 ... 1 bar a	(0 ... 14.5 psi a)	0 bar a	(0 psi a)	2.5 bar a	(36.26 psi a)	> 2,5 bar a	(> 36.3 psi a)	▶	5BA
0 ... 1.6 bar a	(0 ... 23.2 psi a)	0 bar a	(0 psi a)	4 bar a	(58.02 psi a)	> 4 bar a	(> 58.0 psi a)	▶	5BB
0 ... 2.5 bar a	(0 ... 36.3 psi a)	0 bar a	(0 psi a)	6.25 bar a	(90.65 psi a)	> 6,25 bar a	(> 90.7 psi a)	▶	5BD
0 ... 4 bar a	(0 ... 58.0 psi a)	0 bar a	(0 psi a)	10 bar a	(145 psi a)	> 10 bar a	(> 145 psi a)	▶	5BE
0 ... 6 bar a	(0 ... 87.0 psi a)	0 bar a	(0 psi a)	15 bar a	(217 psi a)	> 15 bar a	(> 217 psi a)	▶	5BG
0 ... 10 bar a	(0 ... 145 psi)	0 bar a	(0 psi a)	25 bar a	(362 psi a)	> 25 bar a	(> 362 psi a)	▶	5CA
0 ... 16 bar a	(0 ... 232 psi)	0 bar a	(0 psi a)	40 bar a	(580 psi a)	> 40 bar a	(> 580 psi a)	▶	5CB
Other version, add order code and plain text: Measuring range: ... up to ... mbar a (psi a)									9AA H1Y
Measuring ranges for gauge pressure (only for US market)									
	(0 ... 15 psi g)		(-5.8 psi g)		(35 psi g)		(> 35 psi g)		4BB
	(3 ... 15 psi g)		(-5.8 psi g)		(35 psi g)		(> 35 psi g)		4BC
	(0 ... 20 psi g)		(-5.8 psi g)		(50 psi g)		(> 50 psi g)		4BD
	(0 ... 30 psi g)		(-5.8 psi g)		(80 psi g)		(> 80 psi g)		4BE
	(0 ... 60 psi g)		(-11.5 psi g)		(140 psi g)		(> 140 psi g)		4BF
	(0 ... 100 psi g)		(-14.5 psi g)		(200 psi g)		(> 200 psi g)		4BG
	(0 ... 150 psi g)		(-14.5 psi g)		(350 psi g)		(> 350 psi g)		4CA
	(0 ... 200 psi g)		(-14.5 psi g)		(550 psi g)		(> 550 psi g)		4CB
	(0 ... 300 psi g)		(-14.5 psi g)		(800 psi g)		(> 800 psi g)		4CD
	(0 ... 500 psi g)		(-14.5 psi g)		(1400 psi g)		(> 1400 psi g)		4CE
	(0 ... 750 psi g)		(-14.5 psi g)		(2000 psi g)		(> 2000 psi g)		4CF
	(0 ... 1000 psi g)		(-14.5 psi g)		(2000 psi g)		(> 2000 psi g)		4CG
Other version, add order code and plain text: Measuring range: ... up to ... psi g									9AA H1Y
Measuring ranges for absolute pressure (only for US market)									
	(0 ... 10 psi a)		(0 psi a)		(35 psi a)		(> 35 psi a)		6AG
	(0 ... 15 psi a)		(0 psi a)		(35 psi a)		(> 35 psi a)		6BA
	(0 ... 20 psi a)		(0 psi a)		(50 psi a)		(> 50 psi a)		6BB
	(0 ... 30 psi a)		(0 psi a)		(80 psi a)		(> 80 psi a)		6BD
	(0 ... 60 psi a)		(0 psi a)		(140 psi a)		(> 140 psi a)		6BE
	(0 ... 100 psi a)		(0 psi a)		(200 psi a)		(> 200 psi a)		6BG
	(0 ... 150 psi a)		(0 psi a)		(350 psi a)		(> 350 psi a)		6CA
	(0 ... 200 psi a)		(0 psi a)		(550 psi a)		(> 550 psi a)		6CB
	(0 ... 300 psi a)		(0 psi a)		(800 psi a)		(> 800 psi a)		6CC
Other version, add order code and plain text: Measuring range: ... up to ... psi a									9AA H1Y

▶ Available ex stock

SITRANS P200

2

Selection and ordering data	Order No.	Order code
SITRANS P 200 pressure transmitters for pressure and absolute pressure for general applications Characteristic curve deviation typ. 0.25 % Wetted parts materials: Ceramic and stainless steel + sealing material Non-wetted parts materials: stainless steel	**7MF1565 -**	**-**
Output signal		
4 ... 20 mA; two-wire system; power supply 7 ... 33 V DC (10 ... 30 V DC for ATEX versions) ►		**0**
0 ... 10 V; three-wire system; power supply 12 ... 33 V DC ►		**1 0**
Explosion protection (only 4 ... 20 mA)		
None ►		**0**
With explosion protection EEx ia IIC T4 ►		**1**
Electrical connection		
Connector per DIN EN 175301-803-A, stuffing box thread M16 (with coupling) ►		**1**
Round connector M12 per DIN EN 60139-9 (not for gauge pressure ranges ≤ 16 bar)		**2**
Connection via fixed mounted cable, 2m (not for type of protection "Intrinsic safety i")		**0 3**
Cable quick screw connection PG9 (not for type of protection "Intrinsic safety i")		**0 4**
Connector per DIN EN 175301-803-A, stuffing box thread 1/2"-14 NPT (with coupling)		**5**
Connector per DIN EN 175301-803-A, stuffing box thread PG11 (with coupling)		**6**
Special version		**9** **N 1 Y**
Process connection		
G½" male per EN 837-1 (½" BSP male) (standard for metric pressure ranges mbar, bar) ►		**A**
G½" male thread and G1/8" female thread		**B**
G¼" male per EN 837-1 (¼" BSP male)		**C**
7/16"-20 UNF male		**D**
¼"-18 NPT male (standard for pressure ranges inH_2O and psi)		**E**
¼"-18 NPT female		**F**
½"-14 NPT male		**G**
½"-14 NPT female		**H**
7/16"-20 UNF female		**J**
M20x1.5 male		**P**
Special version		**Z** **P 1 Y**
Sealing material between sensor and enclosure		
Viton (FPM, standard) ►		**A**
Neoprene (CR)		**B**
Perbunan (NBR)		**C**
EPDM		**D**
Special version		**Z** **Q 1 Y**
Version		
Standard version ►		**1**
Further designs		
Supplement the order no. with "**-Z**" and add order code.		
Manufacturer's test certificate M per DIN 55340, Part 18 and ISO 8402 (calibration certificate) supplied	**C11**	
Oxygen application, oil and grease-free cleaning (only in conjunction with the sealing material Viton between sensor and enclosure)	**E10**	

► Available ex stock

Dimensional drawings

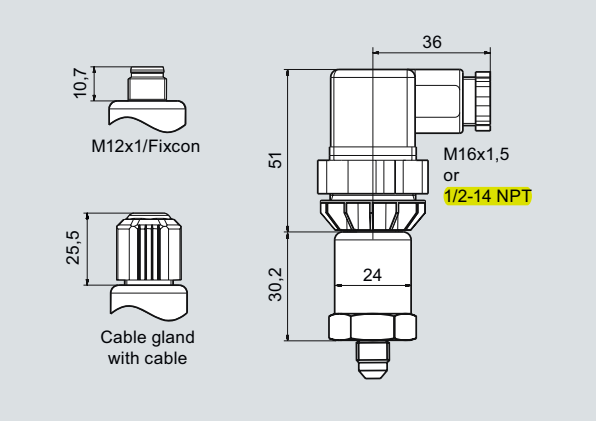

SITRANS P200, electrical connections, dimensions in mm (inch)

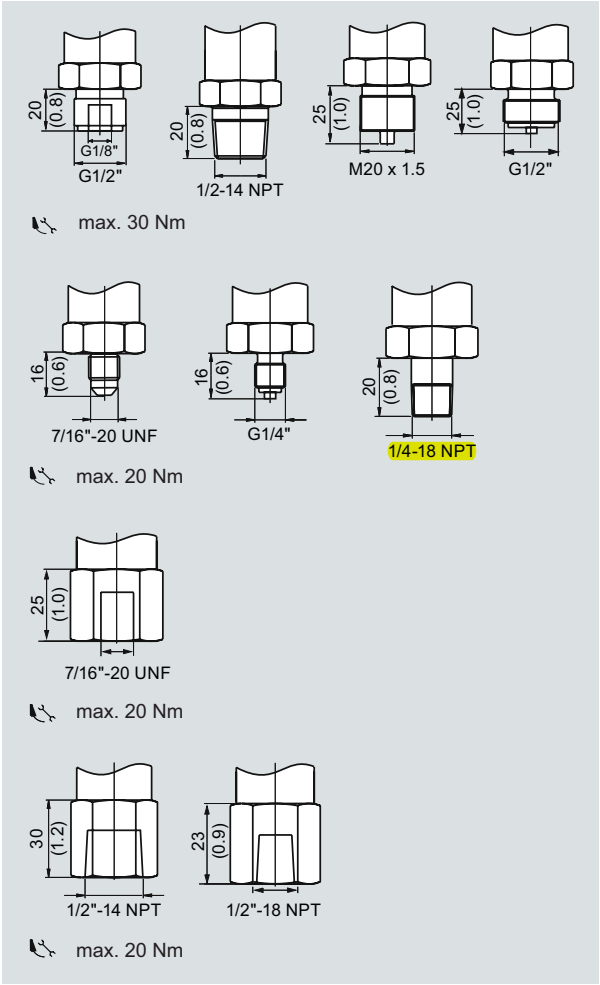

SITRANS P200, process connections, dimensions in mm (inch)

2

Schematics

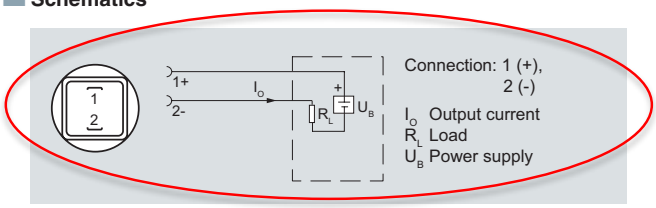

Connection with current output and connector per EN 175301

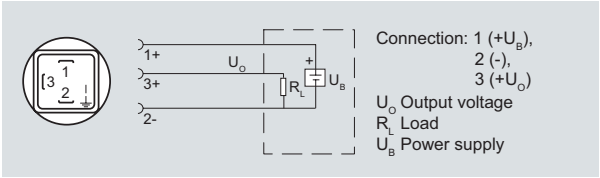

Connection with voltage output and connector per EN 175301

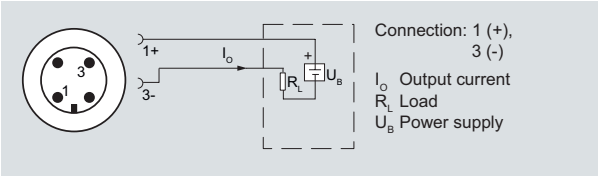

Connection with current output and connector M12x1

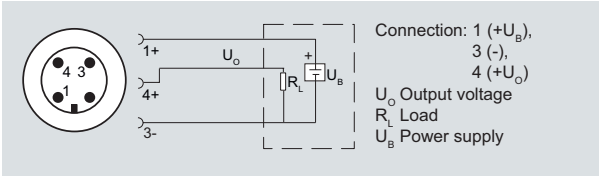

Connection with voltage output and connector M12x1

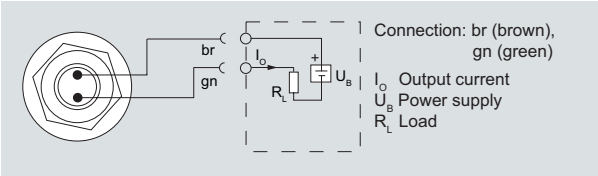

Connection with current output and cable

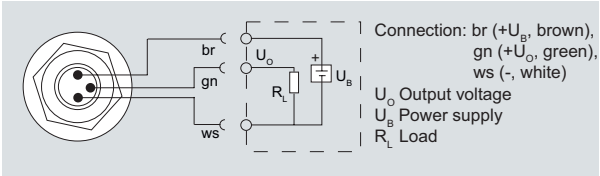

Connection with voltage output and cable

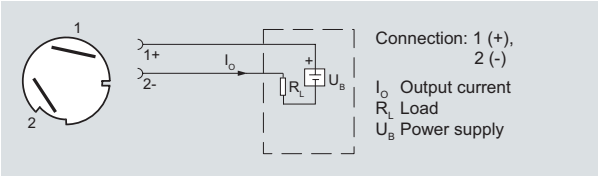

Connection with current output and cable quick screw connection

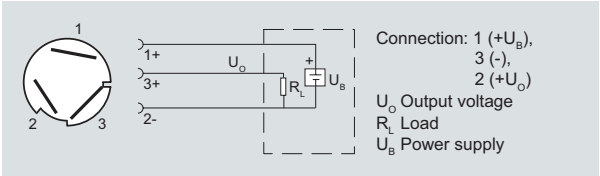

Connection with voltage output and cable quick screw connection

Version with explosion protection: 4 ... 20 mA

The grounding connection is conductively bonded to the transmitter enclosure

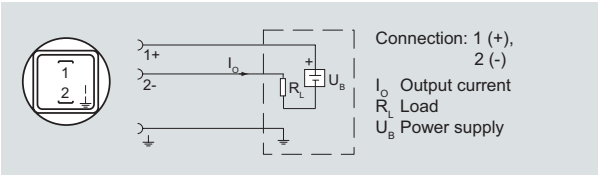

Connection with current output and connector per EN 175301 (Ex)

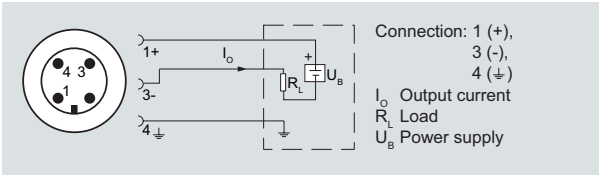

Connection with current output and connector M12x1 (Ex)

SYNERGY ENVIRONMENTAL, LLC

3-WAY VALVES

VSI

14"ϕ 3-way
2-position/Electric

SERIES 1000 ELECTRIC ACTUATORS

SERIES 1000

DESIGN FEATURES

Series 1000 On-Off Rotary Electric Actuator

Standard Features

Torque Output Range: 434in-lb to 17,700in-lb
Housing: NEMA 4, watertight, corrosion-resistant, powder coated, robust aluminum die cast
Mounting: ISO 5211 Standard mounting configurations
Electric Motor: 120VAC, single phase, 60Hz totally enclosed, non-ventilated, high starting torque, reversible induction type, Class F insulation
Thermal Overload Motor Protection: Auto reset thermal switch embedded in the motor winding - trips when the maximum winding temperature is exceeded
Position Limit Switches: 2 x SPDT for Open and Close travel limit - easily adjustable, cam operated
Position Indicator: Mechanical dome type with visible red/yellow closed/open indicator
Terminal Strip: Refer to wiring diagrams for details
Conduit Entries: 1 x 1/2" NPT for power and control wiring
Power Gears: Alloy steel spur gears to final stage aluminum bronze worm sector gear
Break: An electro-mechanical brake is NOT required. The worm gear drive prevents back driving and hunting
Bearings: High quality alloy steel sleeve and ball bearings
Manual Override: Allen Handle
Ambient Temperature Range: -31°F to +150°F
Certification and Approvals: CE, NEMA 4, NRTL, CSA File 226201
Internal Heater

Manual Override Power Switch: Disconnects power from the actuator without the need to disconnect power from the terminals or the panel. The power needs to be disconnected to manually operate the actuator.

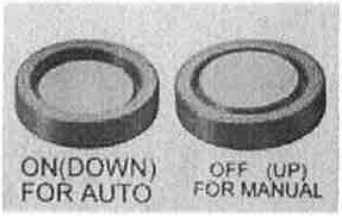

Optional Features

- 220V AC 50/60Hz power
- 24V AC 50/60Hz power - models 1005 and 1010
- 12/24V DC 1005 through 1040
- Torque Limit Switches for Close direction of travel
- Feedback Potentiometer - 1000ohm
- DeClutchable Handwheel Override

ON-OFF SPECIFICATIONS

Series 1000 On-Off Actuator Specifications

Model	1005-24VAC	1005 (-F)	1010-24VAC	1010-24VDC	1010 (-F)	1040 (-F)	1200
Output Torque(in-lb)	487	434	1239	885	880	3520	17,700
Output Torque(Nm)	55	49	140	100	99	398	2000
Duty Cycle	75%	75%	75%	75%	75%	50%	50%
Travel Speed at 60Hz(Sec)	60	25	140	13	25	25	50
Maximum Current (Amp. @ 110/220VAC)		.35/.18			.41/.22	1.66/.90	2.40/1.21
Run Current (Amp. @ 24VAC)	.6		.6				
Maximum Current (Amp. @ 24VAC)	.9		.9				
Run Current (Amp. @ 24DC)				1.6			
Maximum Current (Amp. @ 24DC)				4			
Enclosure Raiting	WATERTIGHT NEMA 4						
Weight(lb)	5.7	5.7	8.2	8.2	8.2	16.1	24.7

1000 (ON/OFF) With Standard Limit Switches

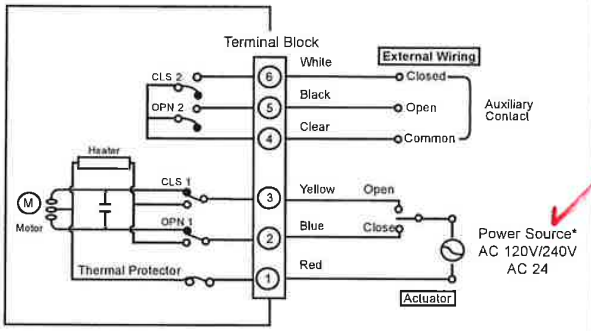

OPN 1 = Open Limit Switch
OPN 2 = Open Direction Aux. Switch
CLS 1 = Closed Limit Switch
CLS 2 = Closed Direction Aux. Switch

*Power source dependant on model

wiring

1010-24DC (ON/OFF) With Standard Limit Switches

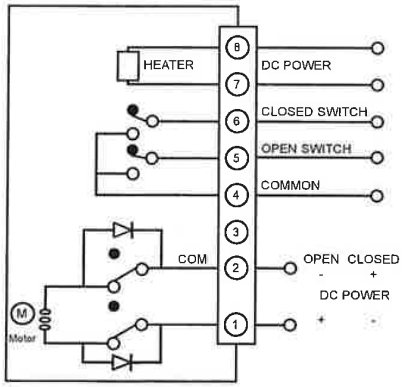

SYNERGY ENVIRONMENTAL, LLC

SUMP LEVEL SWITCHES

Series FSW2

Free-Floating Level Switch

Designed for Industrial Applications, Mercury-Free, Self Counter-Weighted

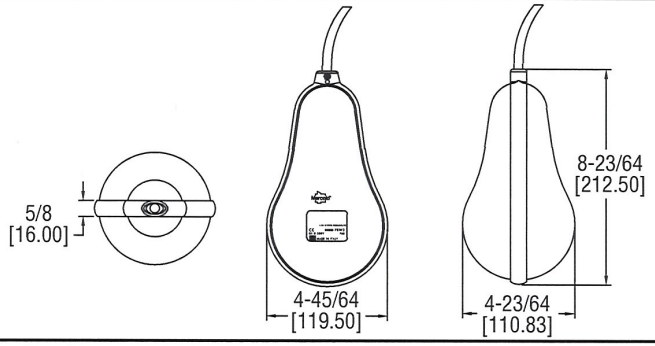

The Series FSW2 Free-Floating Level Switch is a mercury-free self counter-weighted floating switch designed for the automation of pumps, specifically filling and draining of tanks, wells, and reservoirs. The FSW2 body is free of any irregularities making it ideal for use in sewage water applications. The polypropylene body consists of a double airtight chamber with high-pressure melted polypropylene re-injection sealing to ensure a perfect seal against infiltration. Cable hangers are available to suit a variety of mounting applications. Featuring CE approval and optional cables available that include higher chemical compatibility, high temperature durability, oil resistance, and drinking water suitability. Contact factory for piggyback plug option, and cable length options ranging from 10 to 70 ft (3.04 to 21.34 m).

SPECIFICATIONS

Service: Compatible liquids, slurries.
Wetted Materials: Enclosure: Polypropylene; Cable: PVC.
Operating Temperature: -4 to 176°F (-20 to 80°C).
Pressure Limits: 29 psi (2 bar).
Enclosure Rating: IP68.
Switch Type: See model chart.
Electrical Rating: 10 (8) A @ 250 VAC.
Mounting Orientation: Vertical.
Shipping Weight:
Enclosure: 2.4 lb (1100 g);
Cable: 0.77 oz (21.27 g) per ft.
Agency Approval: CE.

Model	Switch Type	Cable Length	Model	Switch Type	Cable Length
FSW2-ONPN-20	SPST NO	20 ft (6.10 m)	**FSW2-CNPN-40**	SPST NC	40 ft (12.19 m)
FSW2-ONPN-30	SPST NO	30 ft (9.14 m)	**FSW2-CNPN-50**	SPST NC	50 ft (15.24 m)
FSW2-ONPN-40	SPST NO	40 ft (12.19 m)	**FSW2-DNPN-20**	SPDT	20 ft (6.10 m)
FSW2-ONPN-50	SPST NO	50 ft (15.24 m)	**FSW2-DNPN-30**	SPDT	30 ft (9.14 m)
FSW2-CNPN-20	SPST NC	20 ft (6.10 m)	**FSW2-DNPN-40**	SPDT	40 ft (12.19 m)
FSW2-CNPN-30	SPST NC	30 ft (9.14 m)	**FSW2-DNPN-50**	SPDT	50 ft (15.24 m)

ACCESSORY

Model	Description
A-459	Cable hanger

NOT USED R.S.

DWYER INSTRUMENTS, INC
Cart Quick Order Log In/Register
Digital Catalog
RIGHT CHOICE. RIGHT PRICE. RIGHT NOW. 800/872-9141 • 219/879-8000
SEARCH Series
Products | Catalog | News | About Us | Contact Us | New Product | Home

You Are Here: > Level > Level Switches > Float > Series FSW2

Mercoid®

Series FSW2
Free-Floating Level Switch
Designed for Industrial Applications, Mercury-Free, Self Counter-Weighted

CE

Product Details

Pricing / Ordering
Introduction
Specifications
Options/Accessories
Approval
Service Manual
Dimensional Drawings
Catalog Pages

Product Specifications

Service: Compatible Liquids, slurries.

Wetted Materials: Housing: Polypropylene; Cable: PVC.

Operating Temperature:: -4 to 176°F (-20 to 80°C).

Pressure Limits: 29 psi (2 bar).

Enclosure Rating: IP68.

Switch Type: See model chart.

Electrical Rating: 10 (8) A @ 250 VAC.

Mounting Orientation: Vertical.

Shipping Weight: Housing: 2.4 lb (1100 g); Cable: 0.77 oz (21.27 g) per foot.

Agency Approval: CE.

VeriSign Trusted VERIFY
About SSL Certificates
Home Free Literature International Distribution What's New About Us Careers Contact Us
Terms & Conditions of Sale
Terms of Access
© Copyright 2012 Dwyer Instruments, Inc. All rights reserved.

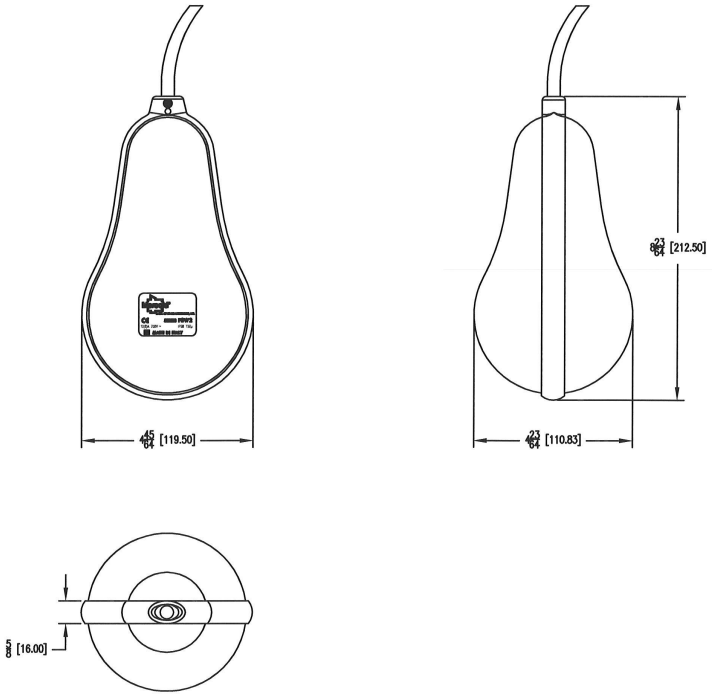

*** DWYER PURCHASING USE ONLY ***	
FR. Number	Description

☐ Items to be supplied with each order. Quantities plus 20%.
☐ Items to be supplied in blanket quantities, vendor to inform DWYER when they require additional quantities.

Ⓒ = CRITICAL DIMENSION
STANDARD TOLERANCES UNLESS NOTED:
ALL DECIMAL DIMENSIONS ±
ALL ANGLES ±

SCALE 1:2

NO.	CHANGES	BY/DATE

DATE
DWN BY
CHKD
APPD

NAME
FSW2
FREE FLOATING
LEVEL SWITCH
ARTWORK
(FOR REFERENCE ONLY)

ACAD2002

MATERIAL
FINISH

DWYER INSTRUMENTS, INC.
MICHIGAN CITY, INDIANA 46360 U.S.A.

FR. NO.

NOTICE: This drawing and the principles and elements of design embodied thereto are the exclusive property of DWYER INSTRUMENTS, INC. and are not to be reproduced, copied, transmitted or used in whole or in part or otherwise authorized in writing by such corporation and must not be submitted to outside parties for examination without the written consent of said corporation.

SYNERGY ENVIRONMENTAL, LLC

CONTROLS SYSTEM COMPONENTS

CONCEPT® Wall-Mount Enclosures

CONCEPT®, Type 4 and 12

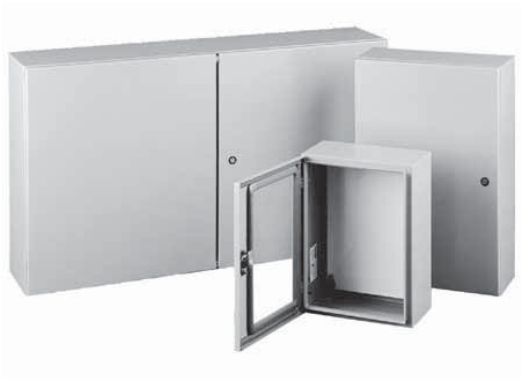

Industry Standards

Wall-mounting brackets required to maintain UL/CSA external mounting requirement.

CONCEPT solid single-door, door with window and flush-mount models

UL 508A Listed; Type 4, 12; File No. E61997
cUL Listed per CSA C22.2 No. 94; Type 4, 12; File No. E61997

NEMA/EEMAC Type 4, 12, 13
CSA, File No. 42186: Type 4, 12
VDE IP66
IEC 60529, IP66

CONCEPT two-door models

UL 508A Listed; Type 12; File No. E61997
cUL Listed per CSA C22.2 No. 94; Type 12; File No. E61997

NEMA/EEMAC Type 12
CSA, File No. 42186, Type 12
VDE IP 55
IEC 60529, IP55

Application

CONCEPT® Enclosures are ideal for machine control applications. With streamlined styling, flush quarter-turn latches and an attractive, durable finish. Available in solid or window single-door and two-door landscape, flush-mount and sloped-top versions for application and mounting flexibility. Two-door landscape models provide full-width access and easy panel installation.

Specifications

- 14, 16 or 18 gauge steel (see table)
- Seams continuously welded and ground smooth
- Corner-formed doors
- Simple easy-to-remove and install hinge pins with built-in captivation clip
- High-torque threadless studs and fasteners on door
- Minimum-width body flange provides maximum door opening (210 degrees)
- External formed body flange
- Panel mounting studs fit optional CONCEPT panels and other accessories
- Mounting holes in back of body for optional external wall-mount brackets
- Hidden hinges
- Doors are interchangeable and easily removed by pulling clip-style hinge pins
- Seamless foam-in-place gasket
- Quarter-turn slotted latch(es)
- Door alignment device on doors wider than 30 in.
- Four hinges on 60-in.-high enclosures
- Grounding stud on body; bonding provision on door (except window-door models)
- Provisions for thermoplastic data pocket (right-hand hinged door on two-door models)
- Hardware kit with panel mounting nuts, panel grounding hardware and sealing washers
- Single-door enclosures have a three-point latch system on enclosures where A is equal to or greater than 42-in. with quarter-turn, slotted latch
- Window-door enclosures have a clear polycarbonate window flush with door surface
- Mounting frame on flush-mount enclosures extends completely around enclosure
- Two-door enclosures have a overlapping door design which provides full-width access
- Two door enclosures have a three-point latch system on right-hand hinged door furnished with flush slotted insert
- Illustrated instruction sheet

Finish

Two standard finishes are available: ANSI 61 gray or RAL 7035 textured light-gray polyester powder paint inside and out.

Accessories

Door Stop Kit
Handles
Lock Inserts
CONCEPT® Panels
Mounting-Bracket Kits

Modification and Customization

Hoffman excels at modifying and customizing products to your specifications. Contact your local Hoffman sales office or distributor for complete information.

Bulletin: CW1

© 2010 Pentair Technical Products

SIEMENS

Product Announcement

SITOP Power Supplies October 3, 2011

Delivery Release – SITOP PSU 100C Compact Line 12VDC/ 6.5A, 24VDC/ 2.5A, and 24VDC/ 4A Power Supplies

Effective immediately the SITOP PSU 100C Compact power supplies in 12VDC/ 6.5A, 24VDC/ 2.5A, and 24VDC/ 4A are available and released for delivery

With the newly released SITOP compact power supplies, the SITOP portfolio has been expanded to include four 24 VDC output versions with 0.6 A (15 W), 1.3A (30 W), a *new* 2.5 A (60 W), and a *new* 4 A (96 W) and two 12VDC output versions with 2 A (24 W) and the *new* 6.5 A (78 W) power supply. This further expands the SITOP portfolio in the lower performance ranges. The most prominent features of the new power supplies are their small width, high efficiency across the whole load range, minimum no-load losses (standby) as well as connection via plug terminals.

Exceptional Features of the SITOP PSU 100C Compact Line

- Compact design with a width of only 22.5 mm to 52.5 mm
  - 22.5mm (24VDC/ 0.6A), 30mm (12VDC/ 2A & 24VDC/ 1.3A), 45mm (24VDC/ 2.5A), & 52.5mm (24VDC/ 4A & 12VDC/ 6.5A)
- Wide input voltage range from 85 to 264VAC or 110 to 300VDC
- Regulated output voltage of +/- 3%
- A settable output voltage up to 26.4VDC for most 24VDC versions and up to 12.9VDC for both 12VDC versions allows to compensate voltage drops
  - 24VDC/ 0.6A cannot be adjusted
- High efficiency from 82 % to 89% at rated load (maximum load) based on the version
  - Also provides high efficiency at loads below the rated values (partial load range)
  - Minimum no-load losses (standby) of < 0.5 W (24VDC/ 0.6A and 12VDC/ 2.0A version) and < 0.75 W (12VDC/ 6.5A, 24VDC/ 1.3A, 24VDC/ 2.5A, and 24VDC/ 4A version)
- Connection via plug-in terminals (included in delivery are removable plug-in screw terminals)
  - Removable plug-in spring terminals are optionally available
- LED display for reliable identification of operating states
- Operating temperature range from –20 to +70 °C

Siemens Industry, Inc.
Industry Automation
5300 Triangle Parkway
Norcross, GA 30092 USA

Tel.: +1 (800) 333 7421
www.usa.siemens.com/support

© 2011 Siemens Industry, Inc.
The Siemens logo is a registered trademark of Siemens AG.
Specifications are subject to change without notice.

All trademarks are of Siemens AG

Customer Benefits

- Panel space-saving due to slim-line design perfectly suites this power supply line for control boxes, control panels and wall mount housings
- Low energy consumption due to the high efficiency across the whole load range as well as minimum losses at no-load operation (standby)
- Plug in terminals provide user-friendly, fast connection
- High flexibility regarding connection options with included screw terminal adapters, spring terminal adapters available are optionally available
- Wide input voltage range from 85 – 265 VAC covers all single phase applications worldwide
- Can also be used as a DC/DC converter with an input voltage range from 110 to 300VDC
- Adjustable output voltage for compensation of voltage drops (not with 24VDC/ 0.6A version)
- Can be used in extreme environment conditions due to an operating temperature range from -20 to 70°C

Order Information

The new part numbers are set up in SAP/ Industry Mall and can be ordered through the system.

Part number	Description	List price
6EP1322-5BA10	SITOP PSU 100C Compact single phase 12VDC/ 6.5A power supply	$ 130.00
6EP1332-5BA00	SITOP PSU 100C Compact single phase 24VDC/ 2.5A power supply	$ 86.00
6EP1332-5BA10	SITOP PSU 100C Compact single phase 24VDC/4A power supply	$ 124.00

Sales Tools

Please find attached the following supporting sales tools for the new product

- SITOP Lunch & Learn Presentation
- SITOP compact flyer

Siemens Industry, Inc.
Industry Automation
5300 Triangle Parkway
Norcross, GA 30092 USA

Tel.: +1 (800) 333 7421
www.usa.siemens.com/support

© 2011 Siemens Industry, Inc.
The Siemens logo is a registered trademark of Siemens AG.
Specifications are subject to change without notice.

All trademarks are of Siemens AG

Standard CPUs - CPU 1214C

Overview

- The compact high-performance CPU
- With 24 integral input/outputs
- Expandable by:
  - 1 signal board (SB)
  - 8 signal modules (SM)
  - max. 3 communication modules (CM)

Design

The compact CPU 1214C has:

- 3 device versions with different power supply and control voltages
- Integrated power supply either as wide-range AC or DC power supply (85 to 264 V AC or 24 V DC)
- Integrated 24 V encoder/load current supply:
  For direct connection of sensors and encoders. With 400 mA, the output current can also be used as load power supply
- 14 integrated digital inputs 24 V DC (current sinking/current sourcing (IEC type 1 current sinking))
- 10 integrated digital outputs, either 24 V DC or relay
- 2 integrated analog inputs 0 to 10 V
- 2 pulse outputs (PTO) with a frequency of up to 100 kHz
- Pulse-width modulated outputs (PWM) with a frequency of up to 100 kHz
- Integrated Ethernet interface (TCP/IP native, ISO-on-TCP)
- 6 fast counters (3 with max. 100 kHz; 3 with max. 30 kHz), with parameterizable enable and reset inputs, can be used simultaneously as up and down counters with 2 separate inputs or for connecting incremental encoders
- Expansion by additional communication interfaces, e.g. RS485 or RS232
- Expansion by analog or digital signals directly on the CPU via signal board (with retention of CPU mounting dimensions)
- Expansion by a wide range of analog and digital input and output signals via signal modules
- Optional memory expansion (SIMATIC Memory Card)
- PID controller with auto-tuning functionality
- Integral real-time clock
- Interrupt inputs:

For extremely fast response to rising or falling edges of process signals
- Removable terminals on all modules
- Simulator (optional):
  For simulating the integrated inputs and for testing the user program

Device versions				
Version	Supply voltage	Input voltage DI	Output voltage DO	Output current
• DC/DC/DC	24 V DC	24 V DC	24 V DC	0.5 A, transistor
• DC/DC/relay	24 V DC	24 V DC	5 … 30 V DC / 5 … 250 V AC	2 A; 30 W DC / 200 W AC
• AC/DC/relay	85 … 264 V AC	24 V DC	5 … 30 V DC / 5 … 250 V AC	2 A; 30 W DC / 200 W AC

Function

- Comprehensive instruction set:
  A wide range of operations facilitate programming:
  - basic operations such as binary logic operations, result allocation, save, count, create times, load, transfer, compare, shift, rotate, create complement, call subprogram (with local variables)
  - integral communication commands (e.g. USS protocol, Modbus RTU, S7 communication "T-Send/T-Receive" or Freeport)
  - user-friendly functions such as pulse-width modulation, pulse sequence function, arithmetic functions, floating point arithmetic, PID closed-loop control, jump functions, loop functions and code conversions
  - mathematical functions, e.g. SIN, COS, TAN, LN, EXP
- Counting:
  User-friendly counting functions in conjunction with the integrated counters and special commands for high-speed counters open up new application areas for the user
- Interrupt processing:
  - edge-triggered interrupts (activated by rising or falling edges of process signals on interrupt inputs) support a rapid response to process events
  - time-triggered interrupts
  - counter interrupts can be triggered when a setpoint is reached or when the direction of counting changes
  - communication interrupts allow the rapid and easy exchange of information with peripheral devices such as printers or bar code readers
- Password protection
- Test and diagnostics functions:
  Easy-to-use functions support testing and diagnostics, e.g. online/offline diagnostics
- "Forcing" of inputs and outputs during testing and diagnostics:
  Inputs and outputs can be set independently of cycle and thus permanently, for example, to test the user program
- Motion Control in accordance with PLCopen for simple movements
- Library functionality

Programming

The STEP 7 Basic programming package permits complete programming of all S7-1200 controllers and the associated I/O.

Technical specifications

Product type designation	6ES7 214-1BE30-0XB0 CPU 1214C AC/DC/Relay	6ES7 214-1AE30-0XB0 CPU 1214C DC/DC/DC	6ES7 214-1HE30-0XB0 CPU 1214C DC/DC/Relay
Supply voltages			
Rated value			
● 24 V DC		Yes	Yes
● permissible range, lower limit (DC)		20.4 V	20.4 V
● permissible range, upper limit (DC)		28.8 V	28.8 V
● 120 V AC	Yes		
● 230 V AC	Yes		
● permissible range, lower limit (AC)	85 V		
● permissible range, upper limit (AC)	264 V		
● permissible frequency range, lower limit	47 Hz		
● permissible frequency range, upper limit	63 Hz		
Load voltage L+			
● Rated value (DC)	24 V	24 V	24 V
● permissible range, lower limit (DC)	5 V	20.4 V	5 V
● permissible range, upper limit (DC)	250 V	28.8 V	250 V
Current consumption			
Current consumption (rated value)			500 mA; Typical
Current consumption, max.		1.5 A; 24 VDC	1.2 A; 24 VDC
Inrush current, max.	20 A; At 264 V	12 A	12 A
Current output to backplane bus (DC 5 V), max.	1 600 mA	1 600 mA	1 600 mA
Power losses			
Power loss, typ.	14 W	12 W	12 W
Memory			
Usable memory for user data	50 kbyte	50 kbyte	50 kbyte
Work memory			
● integrated	50 kbyte	50 kbyte	50 kbyte
● expandable	No	No	No
Load memory			
● integrated	2 Mbyte	2 Mbyte	2 Mbyte
● expandable, max.	24 Mbyte	24 Mbyte	24 Mbyte
Backup			
● present	Yes; entire project maintenance-free in the integral EEPROM	Yes; entire project maintenance-free in the integral EEPROM	Yes; entire project maintenance-free in the integral EEPROM
● without battery	Yes	Yes	Yes
CPU-blocks			
OB			
● Number, max.	Limited only by RAM for code	Limited only by RAM for code	Limited only by RAM for code
CPU processing times			
for bit operations, min.	0.1 µs	0.1 µs	0.1 µs
for word operations, min.	12 µs	12 µs	12 µs
for floating point arithmetic, min.	18 µs	18 µs	18 µs
Data areas and their retentivity			
retentive data area in total (incl. times, counters, flags), max.	2 048 byte	2 048 byte	2 048 byte
Flag			
● Number, max.	8 kbyte; Size of bit memory address area	8 kbyte; Size of bit memory address area	8 kbyte; Size of bit memory address area

Address area			
I/O address area			
● I/O address area, overall	1024 bytes for inputs / 1024 bytes for outputs	1024 bytes for inputs / 1024 bytes for outputs	1024 bytes for inputs / 1024 bytes for outputs
● overall	1 024 byte	1 024 byte	1 024 byte
● Outputs	1 024 byte	1 024 byte	1 024 byte
Process image			
● Inputs, adjustable	1 kbyte	1 kbyte	1 kbyte
● Outputs, adjustable	1 kbyte	1 kbyte	1 kbyte
Digital channels			
● integrated channels (DI)	14	14	14
● integrated channels (DO)	10	10	10
Analog channels			
● Integrated channels (AI)	2	2	2
● Integrated channels (AO)	0	0	0
Hardware configuration			
Number of modules per system, max.	3 comm. modules, 1 signal board, 8 signal modules	3 comm. modules, 1 signal board, 8 signal modules	3 comm. modules, 1 signal board, 8 signal modules
Time of day			
Clock			
● Hardware clock (real-time clock)	Yes	Yes	Yes
● Backup time	240 h; Typical	240 h; Typical	240 h; Typical
Test commissioning functions			
Status/control			
● Status/control variable	Yes	Yes	Yes
● Variables	Inputs/outputs, memory bits, DB, distributed I/Os, timers, counters	Inputs/outputs, memory bits, DB, distributed I/Os, timers, counters	Inputs/outputs, memory bits, DB, distributed I/Os, timers, counters
Forcing			
● Forcing	Yes	Yes	Yes
Communication functions			
S7 communication			
● supported	Yes	Yes	Yes
● as server	Yes	Yes	Yes
Web server			
● supported	Yes	Yes	Yes
● User-defined websites	Yes	Yes	Yes
Open IE communication			
● TCP/IP	Yes	Yes	Yes
● ISO-on-TCP (RFC1006)	Yes	Yes	Yes
Number of connections			
● overall	15; dynamically	15; dynamically	15; dynamically
1st interface			
Type of interface	PROFINET	PROFINET	PROFINET
Physics	Ethernet	Ethernet	Ethernet
Isolated	Yes	Yes	Yes
automatic detection of transmission speed	Yes	Yes	Yes
Autonegotiation	Yes	Yes	Yes
Autocrossing	Yes	Yes	Yes
Functionality			
● PROFINET IO Controller	Yes	Yes	Yes
programming			
Programming language			
● LAD	Yes	Yes	Yes
● FBD	Yes	Yes	Yes

● SCL	Yes	Yes	Yes
Cycle time monitoring			
● can be set	Yes	Yes	Yes
Digital inputs			
Number of digital inputs	14; Integrated	14; Integrated	14; Integrated
● of which, inputs usable for technological functions	6; HSC (High Speed Counting)	6; HSC (High Speed Counting)	6; HSC (High Speed Counting)
m/p-reading	Yes	Yes	Yes
Input voltage			
● Rated value, DC	24 V	24 V	24 V
● for signal "0"		5 VDC at 1 mA	
● for signal "1"		15 VDC at 2.5 mA	
Input current			
● for signal "1", typ.	1 mA	1 mA	1 mA
Input delay (for rated value of input voltage)			
● for standard inputs			
– parameterizable	0.2, 0.4, 0.8, 1.6, 3.2, 6.4, and 12.8 ms, selectable in groups of four	0.2, 0.4, 0.8, 1.6, 3.2, 6.4, and 12.8 ms, selectable in groups of four	0.2, 0.4, 0.8, 1.6, 3.2, 6.4, and 12.8 ms, selectable in groups of four
– at "0" to "1", min.	0.2 ms	0.2 ms	0.2 ms
– at "0" to "1", max.	12.8 ms	12.8 ms	12.8 ms
● for interrupt inputs			
– parameterizable	Yes	Yes	Yes
Cable length			
● Cable length, shielded, max.	500 m; 50 m for technological functions	500 m; 50 m for technological functions	500 m; 50 m for technological functions
● Cable length unshielded, max.	300 m; For technological functions: No	300 m; For technological functions: No	300 m; For technological functions: No
Digital outputs			
Number of digital outputs	10	10	10
● of which high-speed outputs		2; 100 kHz Pulse Train Output	
Short-circuit protection	No; to be provided externally	No; to be provided externally	No; to be provided externally
Limitation of inductive shutdown voltage to		L+ (-48 V)	
Switching capacity of the outputs			
● with resistive load, max.	2 A	0.5 A	2 A
● on lamp load, max.	30 W DC; 200 W AC	5 W	30 W DC; 200 W AC
Output voltage			
● for signal "1", min.		20 V	
Output current			
● for signal "1" rated value		0.5 A	
● for signal "0" residual current, max.		0.1 mA	
Output delay with resistive load			
● 0 to "1", max.	10 ms; max.	1 µs	10 ms; max.
● 1 to "0", max.	10 ms; max.	5 µs	10 ms; max.
Switching frequency			
● of the pulse outputs, with resistive load, max.	1 Hz	100 kHz	1 Hz
Cable length			
● Cable length, shielded, max.	500 m	500 m	500 m
● Cable length unshielded, max.	150 m	150 m	150 m
Relay outputs			
Number of relay outputs	10		10
Number of operating cycles	mechanically 10 million, at rated load voltage 100,000		mechanically 10 million, at rated load voltage 100,000
Analog inputs			
Number of analog inputs	2	2	2

Cable length, shielded, max.	100 m; twisted and shielded	100 m; twisted and shielded	100 m; twisted and shielded
Input ranges			
● Voltage	Yes	Yes	Yes
Input ranges (rated values), voltages			
● 0 to +10 V	Yes	Yes	Yes
● Input resistance (0 to 10 V)	≥100k ohms	≥100k ohms	≥100k ohms
Analog outputs			
Cable length			
● Cable length, shielded, max.	100 m; Shielded, twisted wire pair	100 m; Shielded, twisted wire pair	100 m; Shielded, twisted wire pair
Analog value creation			
Integrations and conversion time/ resolution per channel			
● Resolution with overrange (bit including sign), max.	10 bit	10 bit	10 bit
● Integration time, parameterizable	Yes	Yes	Yes
● Conversion time (per channel)	625 µs	625 µs	625 µs
Encoder supply			
24 V encoder supply			
● 24 V	permissible range: 20.4 to 28.8 V	permissible range: 20.4 to 28.8 V	permissible range: 20.4 to 28.8 V
Encoder			
Connectable encoders			
● 2-wire BEROS	Yes	Yes	Yes
Integrated Functions			
Number of counters	6	6	6
Counter frequency (counter) max.	100 kHz	100 kHz	100 kHz
Frequency meter	Yes	Yes	Yes
controlled positioning	Yes	Yes	Yes
PID controller	Yes	Yes	Yes
Number of alarm inputs	4	4	4
Number of pulse outputs		2	
Limit frequency (pulse)		100 kHz	
Operator control and monitoring			
Display			
● Integrated	No	No	No
Galvanic isolation			
Galvanic isolation digital inputs			
● Galvanic isolation digital inputs	No	No	No
● between the channels, in groups of	1	1	1
Galvanic isolation digital outputs			
● Galvanic isolation digital outputs	Yes; Relays	Yes	Relays
● between the channels	No	No	No
● between the channels, in groups of	2	2	1
Permissible potential difference			
between different circuits	500 VDC between 24 VDC and 5 VDC	500 VDC between 24 VDC and 5 VDC	500 VDC between 24 VDC and 5 VDC
EMC			
Interference immunity against discharge of static electricity			
● Interference immunity against discharge of static electricity acc. to IEC 61000-4-2	Yes	Yes	Yes
– Test voltage at air discharge	8 kV	8 kV	8 kV
– Test voltage at contact discharge	6 kV	6 kV	6 kV
Interference immunity to cable-borne interference			
● on the supply lines acc. to IEC 61000-4-4	Yes	Yes	Yes

● Interference immunity on signal lines acc. to IEC 61000-4-4	Yes	Yes	Yes
Surge immunity			
● on the supply lines acc. to IEC 61000-4-5	Yes	Yes	Yes
Immunity against conducted interference induced by high-frequency fields			
● Interference immunity against high-frequency radiation acc. to IEC 61000-4-6	Yes	Yes	Yes
Emission of radio interference acc. to EN 55 011			
● Emission of radio interferences acc. to EN 55 011 (limit class A)	Yes; Group 1	Yes; Group 1	Yes; Group 1
● Emission of radio interference acc. to EN 55 011 (limit class B)	Yes	Yes	Yes
Climatic and mechanical conditions for storage and transport			
Climatic conditions for storage and transport			
● Free fall			
– Drop height, max. (in packaging)	0.3 m; five times, in dispatch package	0.3 m; five times, in dispatch package	0.3 m; five times, in dispatch package
● Temperature			
– Permissible temperature range	-40 °C to +70 °C	-40 °C to +70 °C	-40 °C to +70 °C
● Relative humidity			
– Permissible range (without condensation) at 25 °C	95%	95%	95%
Mechanical and climatic conditions during operation			
Climatic conditions in operation			
● Temperature			
– permissible temperature change	5° C to 55°, 3° C/minute		
● Air pressure acc. to IEC 60068-2-13			
– Permissible air pressure	1080 to 795 hPa	1080 to 795 hPa	1080 to 795 hPa
– Permissible operating height	-1000 to 2000 m	-1000 to 2000 m	-1000 to 2000 m
● Pollutant concentrations			
– SO2 at RH < 60% without condensation	S02: < 0.5 ppm; H2S: < 0.1 ppm; RH < 60% condensation-free	S02: < 0.5 ppm; H2S: < 0.1 ppm; RH < 60% condensation-free	S02: < 0.5 ppm; H2S: < 0.1 ppm; RH < 60% condensation-free
Environmental requirements			
Operating temperature			
● Min.	0 °C	0 °C	0 °C
● max.	55 °C	55 °C	55 °C
● vertical installation, min.	0 °C	0 °C	0 °C
● vertical installation, max.	45 °C	45 °C	45 °C
● horizontal installation, min.	0 °C	0 °C	0 °C
● horizontal installation, max.	55 °C	55 °C	55 °C
Storage/transport temperature			
● Min.	-40 °C	-40 °C	-40 °C
● max.	70 °C	70 °C	70 °C
Air pressure			
● Operation, min.	795 hPa	795 hPa	795 hPa
● Operation, max.	1 080 hPa	1 080 hPa	1 080 hPa
● Storage/transport, min.	660 hPa	660 hPa	660 hPa
● Storage/transport, max.	1 080 hPa	1 080 hPa	1 080 hPa
Relative humidity			
● Operation, max.	95 %; no condensation	95 %; no condensation	95 %; no condensation
Vibrations			
● Vibrations	2G wall mounting, 1G DIN rail	2G wall mounting, 1G DIN rail	2G wall mounting, 1G DIN rail

● Operation, checked according to IEC 60068-2-6	Yes	Yes	Yes
Shock test			
● checked according to IEC 60068-2-27	Yes; IEC 68, Part 2-27 half-sine: Strength of the shock 15 g (peak value), duration 11 ms	Yes; IEC 68, Part 2-27 half-sine: Strength of the shock 15 g (peak value), duration 11 ms	Yes; IEC 68, Part 2-27 half-sine: Strength of the shock 15 g (peak value), duration 11 ms
Degree of protection			
IP20	Yes	Yes	Yes
Standards, approvals, certificates			
CE mark	Yes	Yes	Yes
C-TICK	Yes	Yes	Yes
cULus	Yes	Yes	Yes
FM approval	Yes	Yes	Yes
Dimensions and weight			
Dimensions			
● Width	110 mm	110 mm	110 mm
● Height	100 mm	100 mm	100 mm
● Depth	75 mm	75 mm	75 mm
Weight			
● Weight, approx.	455 g	415 g	435 g

More information

Brochures

Information material for downloading can be found in the Internet:

http://www.siemens.com/simatic/printmaterial

Analog modules - SM 1231 analog input module

Overview

- Analog inputs for SIMATIC S7-1200
- With extremely short conversion times
- For connecting analog sensors without additional amplifiers
- For solving even more complex automation tasks

Application

The SM 1231 analog input signal modules allow the connection of the controller to analog signals of the process.

This provides users with the following advantages:

- Optimal adaptation:
  With analog signal modules, users can optimally adapt their controllers even to more complex tasks
- Direct connection of sensors:
  Up to 14 bit resolution and different input ranges permit the connection of sensors without additional amplifier
- Flexibility:
  If the task is expanded subsequently, the controller can be upgraded. Updating of the user program is extremely simple

Design

The signal modules have the same design features as the basic devices.

- Installation on DIN rails:
  The modules are snapped onto the rail next to the CPU on the right and are electrically and mechanically connected to each other and to the CPU by the integral slide mechanism.
- Direct installation:
  Horizontal or vertical mounting on DIN rail or direct mounting in the cabinet using integral lugs.

Function

The SM 1231 analog input signal modules convert analog signals from the process into digital signals for internal processing by the SIMATIC S7-1200.

Technical specifications

Product type designation	6ES7 231-4HD30-0XB0 SM 1231 AI 4x13 bit	6ES7 231-4HF30-0XB0 SM 1231 AI 8 x 13 bit
Supply voltages		
Rated value		
● 24 V DC	Yes	Yes
Current consumption		
Current consumption, typ.	45 mA	45 mA
from backplane bus 5 V DC, typ.	80 mA	90 mA
Power losses		
Power loss, typ.	1.5 W	1.5 W
Connection method		
required front connector	Yes	Yes
Analog inputs		
Number of analog inputs	4; Current or voltage differential inputs	8; Current or voltage differential inputs
permissible input frequency for current input (destruction limit), max.	± 35 V	± 35 V
permissible input current for voltage input (destruction limit), max.	40 mA	40 mA
Cycle time (all channels) max.	625 µs	625 µs
Input ranges		
● Voltage	Yes; ±10 V, ±5 V, ±2.5 V	Yes; ±10 V, ±5 V, ±2.5 V
● Current	Yes; 0 to 20 mA	Yes; 0 to 20 mA
● Thermocouple	No	No
● Resistance thermometer	No	No
● Resistance	No	No
Input ranges (rated values), voltages		
● -10 V to +10 V	Yes	Yes
● Input resistance (-10 V to +10 V)	≥9M ohms	≥9M ohms
● -2.5 V to +2.5 V	Yes	Yes
● Input resistance (-2.5 V to +2.5 V)	≥9M ohms	≥9M ohms
● -5 V to +5 V	Yes	Yes
● Input resistance (-5 V to +5 V)	≥9M ohms	≥9M ohms
Input ranges (rated values), currents		
● 0 to 20 mA	Yes	Yes
● Input resistance (0 to 20 mA)	≥ 250 ohms	≥ 250 ohms
Voltage input		
● permissible input voltage for voltage input (destruction limit), max.	35 V	35 V
Current input		
● permissible input current for current input (destruction limit), max.	40 mA	40 mA
Temperature compensation		
● Temperature compensation parameterizable	No	No
Analog outputs		
Number of analog outputs	0	0
Analog value creation		
Integrations and conversion time/ resolution per channel		

● Resolution with overrange (bit including sign), max.	12 bit; + sign	12 bit; + sign
● Integration time, parameterizable	Yes	Yes
● Interference voltage suppression for interference frequency f1 in Hz	40 dB, DC to 60 V for interference frequency 50 / 60 Hz	40 dB, DC to 60 V for interference frequency 50 / 60 Hz
Smoothing of measured values		
● parameterizable	Yes	Yes
● Step: None	Yes	Yes
● Step: Low	Yes	Yes
● Step: Medium	Yes	Yes
● Step: High	Yes	Yes
Errors/accuracies		
Temperature error (relative to input area)	25°C ±0.1% to 55°C ±0.2% total measurement range	25°C ±0.1% to 55°C ±0.2% total measurement range
Basic error limit (operational limit at 25 °C)		
● Voltage, relative to input area	+/- 0,1 %	+/- 0,1 %
● Current, relative to input area	+/- 0,1 %	+/- 0,1 %
Interference voltage suppression for f = n x (fl +/- 1%), fl = interference frequency		
● common mode voltage, max.	12 V	12 V
Interrupts/diagnostics/status information		
Alarms		
● Alarms	Yes	Yes
● Diagnostic alarm	Yes	Yes
Diagnoses		
● Diagnostic functions	Yes	Yes
● Monitoring the supply voltage to the electronics	Yes	Yes
● Wire break	No	No
Diagnostics indication LED		
● for status of the inputs	Yes	Yes
● for maintenance	Yes	Yes
Galvanic isolation		
Galvanic isolation analog outputs		
● between the channels and the power supply of the electronics	No	No
Climatic and mechanical conditions for storage and transport		
Climatic conditions for storage and transport		
● Free fall		
– Drop height, max. (in packaging)	0.3 m; five times, in dispatch package	0.3 m; five times, in dispatch package
● Temperature		
– Permissible temperature range	-40 °C to +70 °C	-40 °C to +70 °C
● Air pressure acc. to IEC 60068-2-13		
– Permissible air pressure	1080 to 660 hPa	1080 to 660 hPa
● Relative humidity		
– Permissible range (without condensation) at 25 ° C	95%	95%
Mechanical and climatic conditions during operation		
Climatic conditions in operation		
● Air pressure acc. to IEC 60068-2-13		
– Permissible air pressure	1080 to 795 hPa	1080 to 795 hPa
● Pollutant concentrations		
– SO2 at RH < 60% without condensation	S02: < 0.5 ppm; H2S: < 0.1 ppm; RH < 60% condensation-free	S02: < 0.5 ppm; H2S: < 0.1 ppm; RH < 60% condensation-free
Degree of protection		
IP20	Yes	Yes
Standards, approvals, certificates		
CE mark	Yes	Yes

C-TICK	Yes	Yes
FM approval	Yes	Yes
Mechanics/material		
Type of housing (front)		
● Plastic	Yes	Yes
Dimensions and weight		
Dimensions		
● Width	45 mm	45 mm
● Height	100 mm	100 mm
● Depth	75 mm	75 mm
Weight		
● Weight, approx.	180 g	180 g

More information

Brochures

Information material for downloading can be found in the Internet:

http://www.siemens.com/simatic/printmaterial

Communication - CSM 1277 unmanaged

Overview

- Unmanaged switch for connecting a SIMATIC S7-1200 to an Industrial Ethernet network with a line, tree or star topology
- Multiplication of Ethernet interfaces on a SIMATIC S7-1200 for additional connection of up to three programming devices, operator controls, and further Ethernet nodes
- Simple, space-saving mounting on the SIMATIC S7-1200 mounting rail
- Low-cost solution for implementing small, local Ethernet networks
- Connection without any problems using RJ45 standard connectors
- Simple and fast status display via LEDs on the device
- Integral autocrossover function permits use of uncrossed connecting cables

Benefits

get Designed for Industry

- Reduction in assembly costs and mounting space compared to use of external network components
- Fast commissioning, as no configuration is necessary
- Flexible expansion of the network by simply inserting the CSM

Application

The CSM 1277 is an Industrial Ethernet switch of compact design for use in the SIMATIC S7-1200. The CSM 1277 can be used to multiply the Ethernet interface of the SIMATIC S7-1200 for simultaneous communication with operator panels, programming devices, other controllers, or the office world.

The CSM 1277 and the SIMATIC S7-1200 controller can be used to implement simple automation networks at low cost.

Design

The CSM 1277 compact switch module offers all advantages of the SIMATIC S7-1200 design:

- Compact design;
  the rugged plastic enclosure contains:
  - 4 x RJ45 ports for connecting to Industrial Ethernet
  - 3-pole plug-in terminal strip for connection of the external 24 V DC supply on the top
  - LEDs for diagnostics and for status display of the Industrial Ethernet ports
- Simple mounting on the mounting rail of the S7-1200
- Fanless and consequently low-maintenance design
- The module can be replaced without using a programming device

Function

- Multiplication of Ethernet interfaces of the SIMATIC S7-1200
- Design of a small, local Industrial Ethernet network with three further nodes
- Automatic detection of data transfer rate by means of autosensing and autocrossover functions
- LEDs for diagnostics and for status display

Network topology and network configuration

Various network topologies can be implemented using the CSM 1277 compact switch module:

- Connection of SIMATIC S7-1200 in linear topology:
  at least one RJ45 connection of the SIMATIC S7-1200 remains vacant, e.g. for connecting a programming device (PG)
- Connection of SIMATIC S7-1200 to a higher-level network in a tree/star topology:
  at least two RJ45 connections of the SIMATIC S7-1200 remain vacant, e.g. for connecting a programming device/operator panel (PG/OP)
- Design of a small, local network with a SIMATIC S7-1200 and three further Ethernet nodes

Configuration

The CSM 1277 compact switch module is an unmanaged switch and need not be configured.

Diagnostics

The following information is displayed on LEDs on the device:

- Power
- Port status
- Data traffic

Technical specifications

Bestell-Nr.	**6GK7 277-1AA00-0AA0**
Product type designation	**CSM 1277**
Data transmission rate	
Transmission rate 1	10 Mbit/s
Transmission rate 2	100 Mbit/s
Interfaces	
Maximum number of electrical/optical connections for network components or terminal equipment	4
Number of electrical connections	
● For network components or terminal equipment	4
● For signal contact	-
● For power supply	1
Design of electrical connection	
● For network components or terminal equipment	RJ45 port
● For signal contact	-
● For power supply	3-pin terminal block

Supply voltage, current consumption, power loss	
Type of power supply	DC
Supply voltage, external	24 V
● Minimum	19.2 V
● Maximum	28.8 V
Current consumption, maximum	0.07 A
Product component: fusing of power supply input	Yes
Type of fusing of power supply input	0.5 A / 60 V
Effective power loss at 24 V with DC	1.6 W
Permitted ambient conditions	
Ambient temperature	
● During operating phase	0 … 60 °C
● During storage	-40 … +70 °C
● During transport	-40 … +70 °C
Relative humidity at 25 °C without condensation during operating phase, maximum	95 %
IP degree of protection	IP20
Design, dimensions and weights	
Type of construction	SIMATIC S7-1200 device design
Width	45 mm
Height	100 mm
Depth	75 mm
Net weight	0.15 kg
Type of mounting	
● 35 mm DIN rail mounting	Yes
● Wall mounting	No
● S7-300 rail mounting	No
Type of mounting	-
Product properties, functions, components General	
Cascading with star topology	-
Product function: switch-managed	No
Standards, specifications, approvals	
Standard	
● For EMC from FM	FM3611: Class 1, Division 2, Group A, B, C, D / T.., CL.1, Zone 2, GP. IIC, T.. Ta
● For Ex zone	EN 600079-15:2005, EN 600079-0:2006, II 3 G Ex nA II T4, KEMA 08 ATEX 0003 X
● For CSA and UL safety	UL 508, CSA C22.2 No. 142
● For Ex zone of CSA and UL	-
● For emitted interference	EN 61000-6-4 (Class A)
● For noise immunity	EN 61000-6-2
Certificate of suitability	EN 61000-6-2, EN 61000-6-4
● CE mark	Yes
● C-Tick	Yes

More information

To assist in selecting the right Industrial Ethernet switches as well as configuration of modular versions, the SIMATIC NET Selection is available at:
http://www.siemens.de/switchselection

3.10 SCALANCE XB005 product characteristics

Possible connections

The SCALANCE XB005 has five RJ-45 jacks for connection of end devices or other network segments.

Figure 3-5 SCALANCE XB005

3.11 SCALANCE XB005 TP ports

Connector pinout

On the SCALANCE XB005, the TP ports are implemented as an RJ-45 jack with MDI-X assignment (Medium Dependent Interface–Autocrossover) of a network component.

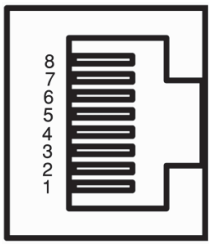

Figure 3-6 RJ-45 jack

Table 3- 5 Pin assignment of the RJ-45 jack

Pin number	Assignment
Pin 8	n. c.
Pin 7	n. c.
Pin 6	TD-
Pin 5	n. c.
Pin 4	n. c.
Pin 3	TD+
Pin 2	RD-
Pin 1	RD+

NOTICE
TP cords or TP-XP cords with a maximum length of 10 m can be connected to the RJ-45 TP port. With the IE FC cables and IE FC RJ-45 plug 180, an overall cable length of up to 100 m is permitted between two devices depending on the cable type.

SIEMENS

SITOP UPS500S – Grundmodul / basic module
SITOP UPS501S – Kondensatormodul / capacitor module

6EP1933-2EC41
6EP1933-2EC51
6EP1935-5PG01

Betriebsanleitung		C98130-A7584-A2-04-7419
Operating instructions		
Manuel d'utilisation	voir Internet	http://www.siemens.com/sitop/manuals
Manuale di servizio	vedi Internet	http://www.siemens.com/sitop/manuals
Manual de instrucciones	véase Internet	http://www.siemens.com/sitop/manuals

Maßbild
Dimension drawings

6EP1933-2EC41/51 / 6EP1935-5PG01

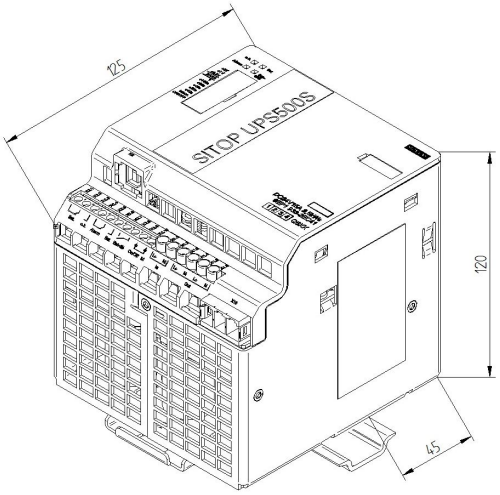

On / Off

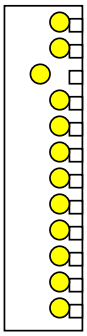

+2V
+1V
+0,5V
Zuschaltschwelle (cut-in threshold) +22V fest eingestellt (fixed)

2A / 1A Ladestrom (charging current)

eingestellte Zeit / max. Zeit (set time/max.)

+160s
+ 80s
+ 40s
+ 20s
+ 10s
Pufferzeit (buffering time) +5s fest eingestellt (fixed)

Unterbrechung output (disconnection)

Betriebszustand Akku On / Off (operating state battery)

Grundeinstellung, Auslieferzustand (basic setting, delivery state)

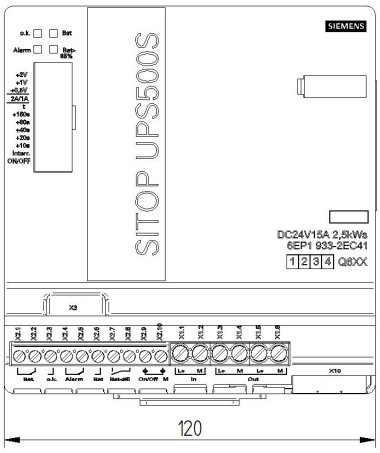

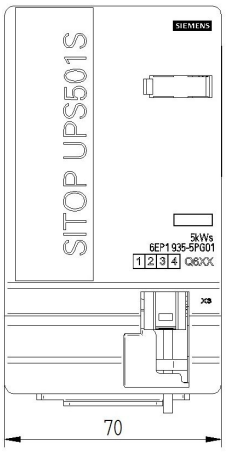

Hinweis
Diese Betriebsanleitung enthält aus Gründen der Übersichtlichkeit nicht sämtliche Detailinformationen des Produkts und kann auch nicht jeden denkbaren Fall der Aufstellung, des Betriebes oder der Instandhaltung berücksichtigen. Technische Änderungen jederzeit vorbehalten. In Zweifelsfällen gilt der deutsche Text.

Note
These operating instructions do not purport to cover all details of the product, nor to provide for every possible contingency that may arise during installation, operation or maintenance. Subject to change without notice. The German text applies in cases of doubt.

WARNHINWEISE

Nur entsprechend qualifiziertes Fachpersonal darf an diesem Gerät oder in dessen Nähe arbeiten.
Der einwandfreie und sichere Betrieb dieses Gerätes setzt sachgemäßen Transport, fachgerechte Lagerung, Aufstellung, Montage und die ausschließliche Verwendung von SITOP Kondensator-Modulen voraus.

ACHTUNG

Nur geschultes Personal darf das Gerät öffnen. **Elektrostatisch gefährdete Bauelemente (EGB)**

Entsorgungsrichtlinien

Verpackung und Packhilfsmittel sind recyclingfähig und sollten grundsätzlich der Wiederverwertung zugeführt werden.
Das Produkt selbst darf nicht über den Hausmüll entsorgt werden.

Beschreibung und Aufbau

Das DC-USV-Modul ist ein Einbaugerät der SITOP -Reihe zur Montage auf Normprofilschiene DIN EN 50022-35x15/7,5. Für die Installation der Geräte und Kondensator-Module sind die einschlägigen DIN/VDE-Bestimmungen oder länderspezifischen Vorschriften zu beachten .
Es dient zur Pufferung eines Teiles des Laststromes (max. 15A) von 24V-Laststromversorgungen der Reihe SITOP.
Der Eingang "Input L+" des DC-USV-Grundmoduls ist mit dem Ausgang L+ des versorgenden 24V DC-Netzteils zu verbinden, der Eingang "Input M" mit dem Ausgang M des versorgenden Netzteils. Optional können bis zu 3 Kondensator-Module an den Klemmen X10 bzw. X30 angeschlossen werden. Die zu puffernden Verbraucher werden über den Ausgang „Output L+“ und „Output M“ des DC-USV-Grundmoduls mit der am Eingang angelegten Spannung versorgt, bei Ausfall der 24V DC-Versorgungsspannung bzw. Spannungseinbruch unter die eingestellte Zuschaltschwelle werden die Verbraucher durch Zuschaltung des Kondensator-Moduls bzw. der internen Kondensatoren über einen Spannungswandler versorgt.
Über DIP-Schalter können die Zuschaltschwelle, die Ladeleistung und die Überbrückungszeit eingestellt werden. Ein Schalter dient zur Einstellung einer definierten Überbrückungszeit mit anschließender Abschaltung (siehe Einstellungen), ein Schalter zur Überbrückung des ON/OFF-Kreises, ein Schalter zur Wahl „vor Abschaltung des Pufferbetriebes U_a für 5s unterbrechen“.
Vier Leuchtdioden, zwei potentialfreie Wechsler, ein Schließer und eine USB-Schnittstelle übernehmen die Signalisierung von Betriebszuständen des DC-USV-Moduls (siehe Signalisierung) und die Steuerung „Remote-Timerstart“ und „Shutdown“.

Technische Daten

Eingangsgrößen:

Eingangsnennspannung:	24V DC
Arbeitsspannungsbereich:	22 bis 29V DC
max. Eingangsstrom bei 24V und Kondensatorladung:	17,5A DC
max. Eingangsstrom bei 24V und geladenem Kondensator:	15,2A DC
Verlustleistung bei 24V und Kondensatorladung:	ca. 11,0W
Verlustleistung 24V und geladenem Kondensator:	ca. 9,0W

Ladezeit bei kleiner Ladeleistung und Grundmodul -2EC41/-2EC51 ca. 110s / 220s
Ladezeit bei großer Ladeleistung und Grundmodul -2EC41/-2EC51 ca. 55s / 120s
Ladezeit bei kleiner Ladeleistung und Grundmodul -2EC41/-2EC51 und einem Zusatzmodul ca. 320s / 430s
Ladezeit bei großer Ladeleistung und Grundmodul -2EC41/-2EC51 und einem Zusatzmodul ca. 160s / 220s

Ausgangsgrößen:

Ausgangsnennspannung:	U_{A1} = 24V DC
Ausgangsnennstrom:	I_{A1} = 15A DC
Ausgangsstrombereich:	I_{A1} = 0 ... 15A DC

Ausgangskennlinie des Ladereglers:
Die Ladung des Kondensatormoduls bzw. der internen Kondensatoren erfolgt mit einstellbarer Konstantleistung bis zur Ladeschlussspannung.

Ladeschlussspannung:	U = 21,8V DC
Ladestrom:	I_L = 1 oder 2A

Pufferzeit bei 15A Laststrom Grundmodul -2EC41/-2EC51 tp = 3s / 9s (typisch)
Pufferzeit bei 15A Laststrom mit Grundmodul -2EC41/-2EC51 und einem Zusatzmodul tp = 15s / 20s (typisch)
(siehe Diagramm 1 auf Seite 7)

Einstellungen

Einstellung der Zuschaltschwelle:

Sinkt die Eingangsspannung unter den eingestellten Wert der Zuschaltschwelle, so schaltet das USV-Modul in den Pufferbetrieb um. Die Verbraucher werden dann ausschließlich durch das USV-Modul versorgt. Die Einstellung der Zuschaltschwelle erfolgt mittels 3 Stück DIP-Schalter (Position siehe Seite 2) gemäß Tabelle 1 (siehe Seite 7). Einstellbereich: 22,0 bis 25,5 V DC in 0,5V-Schritten (Auslieferzustand: 22,5V DC ± 0,1V). Genauigkeit: ± 1,8%

Einstellung des Ladestromes:

Die Ladung des Kondensator-Moduls bzw der internen Kondensatoren erfolgt mittels Konstantleistung, bis die eingestellte Ladeschlussspannung erreicht ist. Der Ladevorgang wird dann beendet. Die Einstellung des Ladestromes bestimmt wie schnell die Pufferbereitschaft nach einem Entladevorgang wiederhergestellt ist. Die Einstellung des Ladestromes erfolgt mittels eines DIP-Schalters (Position siehe Seite 2). Einstellbereich: typ. 1A oder typ. 2A (Auslieferzustand: 1A)

Einstellung des Betriebszustandes ON/OFF:

ACHTUNG: Zur normalen Funktion muss der Betriebszustand unbedingt auf „ON“ eingestellt werden (Auslieferzustand ist „OFF“), dazu DIP-Schalter auf „ON“ oder X2.9 mit X2.10 verbinden !!

Um eine unbeabsichtigte Entladung der Kondensatoren (z.B. durch Ausschalten der Anlage) zu verhindern, kann das DC-USV-Modul mittels DIP-Schalter (oder durch Öffnen einer potenzialfreien Verbindung oder Drahtbrücke zw. Klemme X2.9 und X2.10) in den Betriebszustand „OFF“ (Auslieferzustand) geschaltet werden.
Im Betriebszustand „ON“ (DIP-Schalter geschlossen oder Klemme X2.9 mit X2.10 mit potenzialfreiem Schließer für Umax = 15V DC, Imax. = 10mA verbunden oder X2.9 auf Masse gelegt) bietet das DC-USV-Modul die volle Funktionalität laut Spezifikation. Im Betriebszustand „OFF“ erfolgt bei Wegfall der Versorgungsspannung keine Umschaltung in den Pufferbetrieb. Alle anderen Funktionen bleiben erhalten. Wird das USV-Modul während des Pufferbetriebes in den Zustand „OFF“ geschaltet, so wird auch der Pufferbetrieb beendet. Im Normalbetrieb wird die Einstellung ON/OFF alle ca. 20s abgefragt.

Einstellung der Pufferzeit

Die Einstellung der Pufferzeit erfolgt mittels 5 Stück DIP-Schaltern (Position siehe Seite 2) und kann gemäß Tabelle 2 (siehe Seite 7) in 10s-Schritten von 5s bis 315s vorgenommen werden. Mit Schalter 5 (eingestellte Zeit / max. Zeit) kann gewählt werden, ob die Beendigung des Pufferbetriebes nach der eingestellten Zeit oder erst bei Erreichen der Tiefentladeschwelle der Kondensatoren (= maximale Pufferzeit) erfolgt. (Auslieferzustand Pos. Off = maximale Pufferzeit). Mit dem Remote-Signal (wird bei der Schnittstelle beschrieben) kann der Puffertimer gestartet werden um die USV nach der eingestellten Pufferzeit abzuschalten. Wenn die Abschaltung erfolgt ist, besteht keine Möglichkeit mittels Änderung der Schaltereinstellung den Pufferbetrieb wieder einzuschalten. Erst nach Wiederkehr der Eingangsspannung kann ein neuerlicher Pufferbetrieb erfolgen. Bei geladenem USV-Modul und 15A Laststrom beträgt die Pufferzeit ca 3s.

Unterbrechung der Ausgangsspannung

Mittels DIP-Schalter (Position siehe Seite 2) kann gewählt werden, ob die Ausgangsspannung nach Ablauf der eingestellten Pufferzeit für ca. 5 sec unterbrochen wird oder nicht (Auslieferzustand: Keine Unterbrechung). Bei Einstellung „maximale Pufferzeit“ erfolgt eine Unterbrechung der Ausgangsspannung über das Remote-Signal der Schnittstelle.

Schutz- und Überwachungsfunktionen

Verpolschutz: Das USV-Modul ist gegen Verpolung der Eingangsspannung elektronisch geschützt.

Überstrom und Kurzschlussschutz: Im Normalbetrieb und im Pufferbetrieb ist das USV-Modul durch die interne dynamische Strombegrenzung und die interne statische Strombegrenzung geschützt. Die dynamische Strombegrenzung begrenzt den Ausgangsstrom auf typ. 25A. Die statische Strombegrenzung schaltet den Ausgang bei Strömen größer typ. 18A nach ca. 110ms bei Kurzschluss, sowie nach ca. 200ms bei Überlast ab. Eine eingebaute (nicht zugängliche) 20A - Sicherung schützt im Fehlerfall. Im Normalbetrieb erfolgen automatische Wiederanlaufversuche alle ca. 20s. Im Pufferbetrieb erfolgt speichernde Abschaltung. Wiederanlauf erfolgt nach Rückkehr in den Normalbetrieb.

Signalisierung

„Normalbetrieb“, d.h. die Eingangsspannung am DC-USV-Modul ist höher als die eingestellte Zuschaltschwelle. Die Verbraucher werden von der vorgeschalteten Stromversorgung versorgt. Falls ein Kondensator-Modul angeschlossen ist, wird dieses geladen. Im Normalbetrieb leuchtet die **grüne Leuchtdiode** (o.k.) und der Relaiskontakt X2.2 – X2.3 (o.k.) ist geschlossen.
„>85% Vollladung“, d.h. Kondensatorladung größer 85%. **Es wird ausschließlich das Grundmodul überwacht.** Es leuchtet die zweite **grüne Leuchtdiode** (Bat>85%) und der Relaiskontakt X2.7 – X2.8 ist geschlossen. (zweite grüne Leuchtdiode aus und Relaiskontakt X2.7 – X2.8 offen (Ruhestellung bei abgeschaltetem Gerät) bedeutet : Bat<85%, d.h. Kondensatorladung unter 85%)
„Pufferbetrieb“, d.h. die Eingangsspannung ist niedriger als die eingestellte Zuschaltschwelle. Die Verbraucher werden vom USV-Modul versorgt. Im Pufferbetrieb leuchtet die **gelbe Leuchtdiode** (Bat) und der Relaiskontakt X2.1 – X2.2 (Bat) ist geschlossen (Ruhestellung bei abgeschaltetem Gerät).
Alarmmeldung “Pufferbereitschaft fehlt“: Bei Signal „Pufferbereitschaft fehlt“ leuchtet die **rote Leuchtdiode** (Alarm) und der Relaiskontakt X2.4 – X2.5 (Alarm) ist geschlossen (Ruhestellung bei abgeschaltetem Gerät). Ursachen für eine fehlende Pufferbereitschaft **im Normalbetrieb** können sein:
Betriebszustand OFF, defekter Kondensator bzw. Kondensatorspannung < 7V. **Es wird ausschließlich das Grundmodul überwacht.**
Die Abfrage von Betriebszustand ON/OFF, Kondensator bzw. Kondensatorspannung < 7V und somit auch die Ausgabe des Signals erfolgt im Normalbetrieb alle 20s. Nach Fehlerende erfolgt die Rücksetzung nach der nächsten Abfrage.
Im Pufferbetrieb bedeutet das Signal „Alarm“, dass die Kondensatorspannung auf <12V gesunken ist und eine Zwangsabschaltung unmittelbar bevor steht. Nach Abschaltung des Pufferbetriebes aufgrund Überlast, Kurzschluss, Entladung oder abgelaufener Pufferzeit erlischt die rote Leuchtdiode (Alarm), der Relaiskontakt X2.4 – X2.5 bleibt geschlossen. Belastbarkeit der Relaiskontakte: 60V DC / 1A oder 30V AC / 1A

USB: Die Signale werden zusätzlich über eine PC-fähige USB-Schnittstelle ausgegeben. Die Signale werden mit einem jeweils 5 Zeichen langen String ausgegeben. Es gilt die nebenstehende Tabelle. Ein Softwaretool zum Auslesen und Verarbeiten der Signale steht im Internet unter http://www.siemens.de/sitop-usv kostenlos zur Verfügung. Hier sind auch weitere Informationen zur Schnittstelle angeführt.
Technische Ausführung: Die USB Schnittstelle entspricht der Spezifikation 2.0. Die Kommunikation erfolgt aber nur mit Full Speed, d.h. 12Mbit/s, die USB-Optionsbaugruppe wird von der DC-USV mit +5V versorgt („self powered“), Ausgabe der Signalzustände alle 75ms ± 20%; 29ms ± 20% Datenausgabe; 46ms ± 20% Pause. Die Verbindung zum PC erfolgt über ein handelsübliches 4-adriges, geschirmtes USB-Kabel mit einem Wellenwiderstand von 90Ohm, einem USB Series „A“ Stecker zum PC und einem USB Series „B“ Stecker zur DC-USV und einer maximalen Länge von 5m. Das Kabel besteht aus zwei 28 bis 20 AWG „non-twisted“ USB-Versorgungsleitungen (VBUS und GND) und aus zwei 28 AWG „twisted pair“ Datenleitungen (D+ und D-).
Steckerbelegung: Pin 1: VBUS (+4,40V ... +5,25V DC), Sendedaten auf Pin2 (D-) und Pin 3 (D+), Pin 4: GND.
Empfangsdaten: Der Empfang des Zeichens „R“ (Signal Remote Timerstart) startet den Timer im DC-USV-Modul mit der dort eingestellten Überbrückungszeit (Tabelle 2). Nach der eingestellten Überbrückungszeit wird der Pufferbetrieb beendet bzw. im Normalbetrieb die Ausgangsspannung bei Einstellung „Unterbrechung“ für 5s unterbrochen. Der Empfang des Zeichens „S“ (Signal Shutdown) startet den Timer im DC-USV-Modul mit der dort eingestellten Überbrückungszeit (Tabelle 2). Nach der eingestellten Überbrückungszeit wird das DC-USV-Modul speichernd abgeschaltet. Ein Wiederanlauf erfolgt durch Unterbrechung der DC-Versorgungsspannung für min. 1s. In Kombination mit einer SITOP PowerSupply muss für einen Wiederanlauf die Netzspannung für ca 10s unterbrochen werden.

Signal	Klartext
Pufferbereitschaft vorhanden	BUFRD
Pufferbereitschaft fehlt	ALARM
Normalbetrieb	DC_OK
kein Normalbetrieb	DC_LO
kein Pufferbetrieb	*****
Pufferbetrieb	*BAT*
≥ 85% Vollladung	BA>85
≤ 85% Vollladung	BA<85

Umgebung

Einsatzbedingungen nach EN 60721-3-3, Klimaklasse 3K3 (relative Luftfeuchte 5% bis 85% und absolute Luftfeuchte 1 g/m³ bis 25 g/m³; keine Betauung).
Ortsfester Einsatz, wettergeschützt, Verschmutzungsgrad 2
Temperatur für Lagerung und Transport: -40 bis +70°C
Temperatur für Betrieb: 0 bis +60°C

Gewicht

6EP1933-2EC41 1,0kg
6EP1933-2EC51 1,2kg
6EP1935-5PG01 0,7kg

Vorschriften

Schutzart: IP20 nach EN60529 (VDE 0470 Teil1)
Schutzklasse III nach EN60950
VDE 0100 Teil 410 (IEC 364-4-41)
VDE 0106 Teil 1 (IEC 536)
VDE 0113 Teil 1 (EN 60204-1)
IEC 61131; UL 508 / CSA C22.2 File E197259

Montagehinweise

Das Gerät ist zwecks ordnungsgemäßer Entwärmung vertikal so zu montieren, dass die Eingangsklemmen, die Ausgangsklemmen und Zuluftschlitze unten sind. Unterhalb und oberhalb des Gerätes soll mindestens ein Freiraum von je 50mm eingehalten werden.
Um Störeinkopplungen und thermische Beanspruchung zu minimieren, sollen DC-USV-Module und zugehörige Kondensator-Module mindestens 50 cm entfernt von Kommutierungsdrosseln installiert werden! Schnittstellen- (USB) und Steuerleitungen (ON/OFF-Steuerstromkreis) dürfen nicht direkt parallel zu Leistungsleitungen (insbesondere Leitungen zwischen Frequenzumrichter und Motor sowie Frequenzumrichter und Kommutierungsdrossel) verlegt werden. Um Störeinkopplungen zu minimieren soll zu diesen Leitungen ein Abstand von mindestens 10cm eingehalten werden.

Vor Beginn der Installations oder Instandhaltungsarbeiten ist der Hauptschalter der Anlage auszuschalten und gegen Wiedereinschalten zu sichern. Es ist die Betriebsanleitung von SITOP power zu beachten.

Anschluss und Klemmenbelegung

Klemmen	Funktion	Anschlusswert	Bemerkung
X1.1	Eingangsspannung DC 24V	1,0 ... 4mm²	Schraubklemmen für Schraubendreher mit
X1.3, X1.5	Ausgangsspannung DC 24V	17...11 AWG	4,5mm Klingenbreite
X1.2/X1.4, X1.6	Ein/Ausgangsspannung DC 0V		empfohlenes Anzugsmoment 0,7-0,9Nm
X2.1,2,3	Signal: Normalbetrieb / Pufferbetrieb	0,5... 2,5mm²	Schraubklemmen für Schraubendreher mit
X2.4,5,6	Signal: Pufferbereitschaft fehlt / vorhanden	20...13 AWG	3,5mm Klingenbreite
X2.7,8	Signal: Ladezustand >85%		
X2.9/X2.10	On/Off – Brücke (keine Brücke =Off)		empfohlenes Anzugsmoment 0,5-0,7Nm
X3	USB-Schnittstelle		Siehe Beschreibung oben
X10	Kondensator-Modul		Konfektionierter Kabelsatz

ACHTUNG

Die externe Beschaltung aller Klemmen (auch Signal- und Meldekontakte) muss den Anforderungen an SELV-Kreise nach VDE 0805 / EN 60950 genügen.

WARNINGS

Only properly qualified personnel may work on or around this equipment.
The successful and safe operation of this equipment is dependent on proper handling, storage and installation. Correct functioning is also dependent on the use of SITOP ultra modules

CAUTION

Only trained personnel may open the unit. **Electrostatically sensitive devices (ESD)**

Disposal Guideline

Packaging and packing aids can be recycled and should always be disposed of for reuse.
The product itself shall not be disposed of as normal domestic waste.

Description and Design

The DC-UPS module is a chassis unit in the SITOP power product range for mounting on a DIN rail of type DIN EN 50022-35x15/7.5.
The modules and the capacitor modules must be installed in accordance with the applicable DIN/VDE specifications or pertinent regulations in the country of installation.
It buffers a proportion of the load current (max. 15A) of 24V load current supplies in the SITOP range.
Input "Input L+" on the DC-UPS module must be connected to output L+ of the 24V DC power supply unit and input "Input M" to output M of the power supply unit. It is possible to connect max. 3 capacitor-modules via the connectors X10 and X30. The loads to be buffered are supplied via outputs "Output L+" and "Output M" on the DC-UPS module with the voltage connected to the input. If the 24V DC supply voltage fails or drops below the set cut-in threshold, the capacitor module or the internal capacitors are connected in to supply the loads.
The cut-in threshold, charging power and the buffering time can be set via DIP-switches. A switch is provided for setting a defined buffering (stored energy) time with subsequent disconnection of the battery (see Settings), one switch for bridging the ON/OFF circuit, one switch for choosing if the output voltage is interrupted for 5 s at the end of the buffering time or not.
The operating states of the DC-UPS module are signaled by four LEDs, two floating changeover and one normally-open contacts and a USB-interface (see Signaling) and the control signal “Remote Timerstart” and “Shutdown”.

Technical Data

Input quantities:

Rated input voltage:	24V DC
Operating voltage range:	22 to 29V DC
Max. input current at 24V and capacitor charging:	17.5A DC
Max. input current at 24V and charged capacitors:	15.2A DC
Power loss at 24V and capacitor charging:	appr. 11.0W
Power loss at 24V and charged capacitors:	appr. 9.0W

Charging time with low charging power and basic module -2EC41/-2EC51: appr. 110s / 220s
Charging time with high charging power and basic module -2EC41/-2EC51: appr. 55s / 120s
Charging time with low charging power and basic module -2EC41/-2EC51 and one capacitor module: appr. 320s / 430s
Charging time with high charging power and basic module -2EC41/-2EC51 and one capacitor module: appr. 160s / 220s

Output quantities:

Rated output DC voltage:	VA1 = 24V DC
Rated output direct current:	IA1 = 15A DC
Output current range:	IA1 = 0 … 15A DC

Output characteristic of charging regulator:
The capacitors are charged at an adjustable constant power until the end-of-charge voltage is reached.
End-of-charge voltage: V = 21.8V DC
Charging current: P = 1 or 2A
Buffering time at 15A load current with basic module -2EC41/-2EC51: tp = 3s / 9s (typ.)
Buffering time at 15A load current with basic module -2EC41/-2EC51 and one add-on capacitor module: tp = 15s / 20s (typ.)
(see diagram 1 on page 7)

Settings

Setting the cut-in threshold:

If the input voltage drops below the selected cut-in threshold voltage, the UPS module switches over to floating operation. The loads are then supplied solely by the UPS module. The cut-in threshold is set via three DIP-switches (see page 2 for position) according to table 1 (see page 7).
Setting range: 22.0 to 25.5V DC in 0.5-steps (delivery state: 22.5V DC ± 0.1V), accuracy ± 1.8%

Setting the charging current:

The capacitor module or the internal capacitors are charged via constant current until the set end-of-charge voltage is reached. Charging is then terminated. The setting of the charging current determines how quickly the buffer ready state is restored after a discharging process. The charging current is set by a DIP switch (position see page 2). Setting range: typ. 1A or typ. 2A (delivery state: 1A)

Setting the operating state ON/OFF:

Caution: For normal operation "ON" state is necessary (delivery state is “OFF”), in order to achieve that use DIP-switch closed or terminals X2.8 and X2.9 connected with X2.10
To prevent the capacitors from being discharged unintentionally (e.g. when the system power is disconnected), the DC-UPS module can be switched with a DIP-switch (or a wire jumper (or floating connection) inserted between terminals X2.9 and X2.10) to operating state "OFF" (delivery state). In the "ON" state (DIP-switch closed or terminals X2.8 and X2.9 connected with a floating normally-open contact (V_{max} = 15V DC, I_{max} = 10mA)), the DC-UPS module is fully functional according to specification. In the "OFF" state, the module does not switch over to floating operation when the mains supply is disconnected but remains functional in every other respect. If the module is switched to "OFF" in floating operation, it stops operating in floating mode.
During normal operation, the polling interval for the ON/OFF setting is appr. 20s.

Setting the buffering time:

The buffering time is set via five DIP-switches (see page 2 for position) as illustrated in Table 2 (see page 7) in 10s-steps from 5s to 315s. By switch 5 (delivery state max. time) you can choose whether floating operation will be terminated after a prespecified period or when the exhaustive discharge threshold of the capacitors (= maximum buffering time) is reached (delivery state: max. buffering time). Using the remote signal starts the timer to terminate after a prespecified period. Once the battery has been disconnected, there is no way in which floating operation can be restarted again by altering the switch setting. Only when the input voltage has recovered floating operation can be resumed. The buffering time is a appr. 3s with fully charged capacitors and a load current of 15A.

Interruption of the output voltage:

By a DIP-switch (see page 2 for position) you can choose if the output voltage is interrupted for 5 s at the end of the buffering time or not (delivery state : no interruption). Using the setting “max. time” an interruption is started by the remote signal.

Protective and Monitoring Functions

Reverse polarity protection: The UPS module is electronically protected against polarity reversal of the input voltage.

Overcurrent and short-circuit protection: In normal operation and floating operation the UPS module is protected by the internal dynamic current limitation and the internal static current limitation. Dynamic current limitation limits the output current to typ. 25A. Static dynamic limitation shuts down the output if currents are greater than typ. 18A after about 110ms at short-circuit, and after about 200ms at overload. An internal (not accessible) 20A fuse protects the module in the event of a fault. In normal operation automatic restart attempts are made approximately every 20s. In floating operation the module shuts down in store mode. Restart after return to normal operation.

Signaling

"Normal operation", i.e. the input voltage at the DC-UPS module is higher than the set cut-in threshold. The loads are being fed by the line-side power supply. If a battery module is connected, it is fully charged. Under normal operation, the **green LED** (o.k.) is illuminated and relay contact X2.2 – X2.3 (o.k.) is closed.
">85% charge", i.e. battery is loaded more than 85% (**available rest capacity dependent upon aging**). The second green LED (Bat>85%) is illuminated and relay contact X2.7 – X2.8 is closed. (second green LED off and relay contact X2.7 – X2.8 open (de-energized position when unit is disconnected) means : Bat<85%, i.e. battery charge below 85%)
"Floating operation", i.e. the input voltage is lower than the set cut-in threshold. The loads are being supplied by the battery module. In floating operation, the **yellow LED** (Bat) is illuminated and relay contact X2.1 – X2.2 (Bat) closed (de-energized position when unit is disconnected).
Alarm signal "Battery not ready": When the "Battery not ready" signal is active, the **red LED** (Alarm) is illuminated and relay contact X2.4 – X2.5 (Alarm) closed (de-energized position when unit is disconnected). Causes for the "battery not ready" state in **normal operation** are as follows: "OFF" operating state, no battery module connected, reversed polarity or defective battery (battery voltage < 18.5V) or open circuit between battery and UPS module. The interval for polling the operating states ON/OFF, reversed polariy, defective battery or no battery module connected, open circuit between battery and UPS module, and for activating the relevant signal output is 20 s during normal operation. After the end of the failure the signal remains till to the next polling.
If the signal flashes in a 2s cycle, this indicates that the battery is defective, but still capable of floating operation. The specified buffering times cannot be kept in such cases. The battery module must be replaced.
The "Alarm" signal in **floating operation** means that the battery voltage has dropped to <20.4V and automatic disconnection to protect the battery is imminent. When the battery has been disconnected due to overload, short circuit, exhaustive discharge protection or buffering timeout, the red LED (Alarm) gets dark, but relay contact X2.4 – X2.5 remains closed. Load rating of relay contacts: 60V DC / 1A or 30V AC / 1A

USB: The signals are additionally outputs via a PC-capable USB interface. They are each displayed in the shape of 5 characters of plain text. The assignment is shown in the table on the right. A tool for reading out and processing the signals is available free of charge on the Internet at http://www.siemens.com/sitop-ups. This website also contains further information about the interface.
Technical specification: The USB interface is according to specification 2.0, the communication runs only at full speed, i.e. 12Mbit/s. The Interface will be supplied by the DC-UPS with +5V ("self-powered"), signal state output every 75ms ± 20%; data output 29ms ± 20%, pause 46ms ± 20%. The connection to the PC is made by means of a usual 4-wired shielded USB-cable with a wave-resistance of 90Ohm, a USB Series"A" connector to the PC and a USB Series "B" connector to the DC-UPS module and a maximum length of 5m. The cable contains two 28 to 20 AWG "non-twisted" USB-supply wires (VBUS and GND) and two 28 AWG "twisted pair" data wires (D+ and D-).
Pin assignment: Pin1: VBUS (+4.4V to +5.25V DC), transmit data on Pin2 (D-) and Pin3 (D+), Pin4: GND
Receiving data: Receive of the character "R" (Signal Remote Timerstart) starts the timer of the DC-UPS module with the set buffering time (table 2). After the set buffering time, floating operation ends or, during normal operation, the output voltage is interrupted for 5 s if "disconnection" is set. Receipt of the character "S" (shutdown signal) starts the timer in the DC-UPS module with the set buffering time (table 2). After the set buffering time the DC-UPS module is switched off retentively. It is restarted by disconnecting the DC supply voltage for at least 1 s. In combination with a SITOP power supply the line voltage has to be interrupted for approx. 10 s for a restart.

Signal	Text
Buffering ready Buffering not ready	BUFRD ALARM
Normal operation Not normal operation	DC_OK DC_LO
Not floating operation Floating operation	***** *BAT*
>85% charge <85% charge	BA>85 BA<85

Environment

Operating conditions acc. to EN 60721-3-3, climate model 3K3 (relative air humidity 5% to 85%, absolute air humidity 1 g/m^3 to 25 g/m^3, no condensation)
Stationary operation, weather protected, pollution degree 2
Temperature for storage and shipment: -40 to +70°C
Temperature for operation: 0 to +60°C

Weight

6EP1933-2EC41 1.0kg
6EP1933-2EC51 1.2kg
6EP1935-5PG01 0.7kg

Standards

Degree of protection: IP20 to EN60529 (VDE 0470 Part1)
Protection class III to EN60950
VDE 0100 Part 410 (IEC 364-4-41)
VDE 0106 Part 1 (IEC 536)
VDE 0113 Part 1 (EN 60204-1)
IEC 61131; ; UL 508 / CSA C22.2 File E197259

Installation Instructions

In order to guarantee effective cooling, the unit must be vertically installed such that the input and output terminals and the incoming air slots are at the bottom. A clearance of at least 50 mm must be left above and below the unit. Assembly / disassembly see page 8.
To reduce EMI and thermal strain DC-UPS and capacitor modules should be installed at least 50cm away from commutating chokes ! Interface (USB) and control leads (ON/OFF control circuit) must not be laid directly in parallel to power leads or cables (especially leads between frequency converter and motor or frequency converter and commutating choke).
To minimize EMI the distance to those leads should be at least 10cm.

Before commencing with the installation or any repair work, switch off the plant main switch and lock it in the "OFF" position. Please read the operating instructions for SITOP power.

Connection and Terminal Assignments

Terminals	Function	Cable cross-section	Comments
X1.1	Input voltage DC 24V	1.0 ... 4mm^2 17...11 AWG	Screw-type terminals for screwdriver with 4.5mm blade width Recommended tightening torque 0.7-0.9Nm
X1.3, X1.5	Output voltage DC 24V		
X1.2/X1.4, X1.6	Input/output voltage DC 0V		
X2.1,2,3	Signal: Normal operation / Floating operation	0.5... 2.5mm^2 20...13 AWG	Screw-type terminals for screwdriver with 3.5mm blade width Recommended tightening torque 0.5-0.7Nm
X2.4,5,6	Signal: Battery not ready / ready		
X2.7,8	Signal: charge >85%		
X2.9/X2.10	On/Off jumper (no jumper =Off)		
X3	Serial interface or USB-interface		See description above
X10	Capacitor module		Tailored wire set

CAUTION

The external circuitry of all terminals (including signaling and status contacts) must meet the safety requirements stipulated by VDE 0805 (EN 60950): SELV.

Tabelle 1: Einstellbare Zuschaltschwellen
Table 1: Adjustable cut-in threshold

	gewünschte Zuschaltschwelle [V]							
	22,0	22,5	23,0	23,5	24,0	24,5	25,0	25,5
On←1	0	0	0	0	1	1	1	1
2	0	0	1	1	0	0	1	1
3	0	1	0	1	0	1	0	1

Tabelle 2: Einstellbare Pufferzeiten
Table 2: Adjustable buffering time

Schalterstellung / Switch position: On = 1 ; Off = 0
Schalter 1 auf Pos. On: Einstellung um nach der gewünschten Pufferzeit abzuschalten (setting to terminate after the prespecified buffering time)
Schalter 1 auf Pos. Off: Die Abschaltung erfolgt erst bei Erreichen der Tiefentladeschwelle des Akkus. Im Remote-Betrieb kann nach der eingestellten Pufferzeit die Spannung unterbrochen werden (DIP-Schalter Unterbrechung – On)
Setting to terminate when the exhaustive discharge threshold of the battery is reached. An interruption is started by the remote signal. (DIP-switch Disconnection – On)

	gewünschte Pufferzeit / buffering time [s]																															
	5	15	25	35	45	55	65	75	85	95	105	115	125	135	145	155	165	175	185	195	205	215	225	235	245	255	265	275	285	295	305	315
On ←																																
6	0	0	0	0	0	0	0	0	0	0	0	0	0	0	0	0	1	1	1	1	1	1	1	1	1	1	1	1	1	1	1	1
7	0	0	0	0	0	0	0	0	1	1	1	1	1	1	1	1	0	0	0	0	0	0	0	0	1	1	1	1	1	1	1	1
8	0	0	0	0	1	1	1	1	0	0	0	0	1	1	1	1	0	0	0	0	1	1	1	1	0	0	0	0	1	1	1	1
9	0	0	1	1	0	0	1	1	0	0	1	1	0	0	1	1	0	0	1	1	0	0	1	1	0	0	1	1	0	0	1	1
10	0	1	0	1	0	1	0	1	0	1	0	1	0	1	0	1	0	1	0	1	0	1	0	1	0	1	0	1	0	1	0	1

Diagramm 1: Pufferzeit
Diagram 1: buffering time

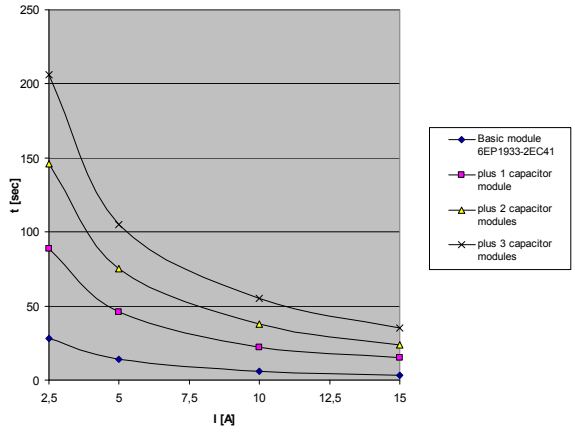

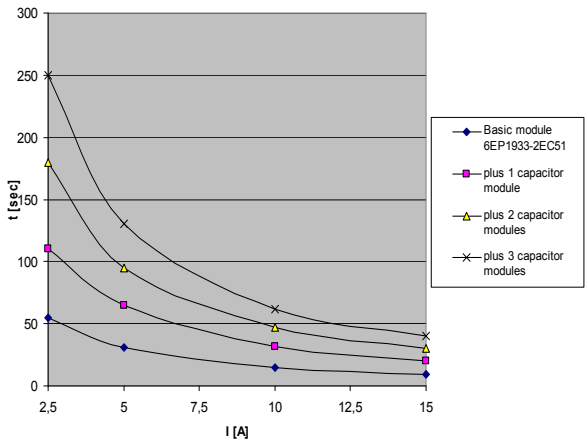

Herausgegeben von:
SIMEA
Bereich IA SC
Siemensstraße 90
1210 Wien
Österreich

Published by:
SIMEA
IA SC Group
Siemensstraße 90
1210 Vienna
Austria

© Siemens AG Österreich 08/2011. All rights reserved

Liefermöglichkeiten und technische Änderungen vorbehalten
Availability and technical specifications subject to change without prior notice

Bestellnummer / Order number C98130-A7584-A2-4-7419

SIEMENS

Home

Full Navigation Path
Siemens Industry Catalog › Automation technology
SIMATIC HMI Operator Control and Monitoring Systems
Operator devices › Comfort Panels
Comfort Panels - Standard

URL:
https://eb.automation.siemens.com/goos/catalog/pages/PrintPreviewProductData.aspx

Current View:
Product Information

e.g. Dear Customer

Product Information Additional Information

Design

KTP400 Comfort

- 4.3" widescreen TFT display, resolution 480 x 272, 16 million colors
- 1 PROFINET and 1 PROFIBUS interface
- Touch screen and membrane keyboard with 4 tactile function keys
- Innovative successor to the TP 177B Touch Panels 4"

KP400 Comfort

- 4.3" widescreen TFT display, resolution 480 x 272, 16 million colors
- 1 PROFINET and 1 PROFIBUS interface
- Membrane keyboard with 8 tactile function keys and system keyboard
- Innovative successor to the Operator Panels OP77B

TP700 Comfort

- 7.0" widescreen TFT display, resolution 800 x 480, 16 million colors
- 1 PROFINET (2 ports with integrated switch) and 1 PROFIBUS interface
- Touch screen
- Innovative successor to the TP 177B/TP 277 Touch Panels and to the Multi Panel MP 177 6"

KP700 Comfort

- 7.0" widescreen TFT display, resolution 800 x 480, 16 million colors
- 1 PROFINET (2 ports with integrated switch) and 1 PROFIBUS interface
- Membrane keyboard with 24 function keys and system keyboard
- Innovative successor to the OP 177B/OP 277 6" Operator Panels

TP900 Comfort

- 9.0" widescreen TFT display, resolution 800 x 480, 16 million colors
- 1 PROFINET (2 ports with integrated switch) and 1 PROFIBUS interface
- Touch screen
- Innovative successor to the Multi Panel MP 277 8" Touch

KP900 Comfort

- 9.0" widescreen TFT display, resolution 800 x 480, 16 million colors
- 1 PROFINET (2 ports with integrated switch) and 1 PROFIBUS interface
- Membrane keyboard with 26 function keys and system keyboard
- Innovative successor to the Multi Panel MP 277 8" Key

TP1200 Comfort

- 12.1" widescreen TFT display, resolution 1280 x 800, 16 million colors
- 1 PROFINET (2 ports with integrated switch) and 1 PROFIBUS interface
- Touch screen
- Innovative successor to the Multi Panel MP 277 10" Touch

KP1200 Comfort

- 12.1" widescreen TFT display, resolution 800 x 480, 16 million colors
- 1 PROFINET (2 ports with integrated switch) and 1 PROFIBUS interface
- Membrane keyboard with 34 function keys and system keyboard
- Innovative successor to the Multi Panel MP 277 10" Key

Integration

The SIMATIC HMI Comfort Panels can be connected to:

- SIMATIC S7 controllers
- Third-party controllers
  - Allen Bradley DF1, Allen Bradley EtherNet/IP
  - Modicon MODBUS RTU, Modicon MODBUS TCP/IP
  - Mitsubishi FX, Mitsubishi MC TCP/IP
  - Omron Hostlink/Multilink
- Multi-protocol capability
- http communication with other SIMATIC HMI systems
- Over Ethernet (TCP/IP) to a higher-level PC, network printer

Note:
Further information can be found under "System interfaces".

Technical specifications

	6AV2 124-2DC01-0AX0	6AV2 124-0GC01-0AX0	6AV2 124-0JC01-0AX0	6AV2 124-0MC01-0AX0
	KTP400 Comfort	TP700 Comfort	TP900 Comfort	TP1200 Comfort
Display				
Design of display	TFT	TFT	TFT	TFT
Screen diagonal	4.3 in	7 in	9 in	12.1 in
Display width	95 mm	152.4 mm	195 mm	261.1 mm
Display height	53.8 mm	91.4 mm	117 mm	163.2 mm
Number of colors	16 777 200	16 777 200	16 777 200	16 777 200
Resolution (pixels)				
■ Horizontal image resolution	480	800	800	1 280

■ Vertical image resolution	272	480	480	800
Backlighting				
■ MTBF backlighting (at 25 °C)	50 000 h; At 50 °C	50 000 h; At 50 °C	50 000 h; At 50 °C	50 000 h; At 50 °C
■ Dimmable backlight	Yes; 0-100 %	Yes; 0-100 %	Yes; 0-100 %	Yes; 0-100 %
Control elements				
Keyboard fonts				
■ Number of function keys	4	0	0	0
■ Keys with LED	Yes	No	No	No
■ System keys	No	No	No	No
Touch operation				
■ Design as touch screen	Yes	Yes	Yes	Yes
Supply voltage				
Type of supply voltage	DC	DC	DC	DC
Rated voltage/DC	24 V	24 V	24 V	24 V
permissible range, lower limit (DC)	19.2 V	19.2 V	19.2 V	19.2 V
permissible range, upper limit (DC)	28.8 V	28.8 V	28.8 V	28.8 V
Memory				
Usable memory for user data	4 Mbyte	12 Mbyte	12 Mbyte	12 Mbyte
Type of output				
Acoustics	Buzzer	Speaker	Speaker	Speaker
■ Buzzer	Yes	No	No	No
■ Speaker	No	Yes	Yes	Yes
Time of day				
Clock				
■ Hardware clock (real-time clock)	Yes	Yes	Yes	Yes
■ Software clock	No	No	No	No
■ Battery-backed	Yes	Yes	Yes	Yes
■ Synchronizable	Yes	Yes	Yes	Yes
Interfaces				
Number of RS 485 interfaces	1	1	1	1
Number of USB interfaces	2; USB 2.0	3; USB 2.0	3; USB 2.0	3; USB 2.0

Number of SD card slots	2	2	2	2
Industrial Ethernet				
■ Number of Industrial Ethernet interfaces	1	2	2	2
■ IRT, supported	No	Yes	Yes	Yes
■ MRP supported	No	No	No	No
■ Number of ports of the integrated switch	1	2	2	2
Protocols				
PROFINET	Yes	Yes	Yes	Yes
Supports protocol for PROFINET IO	Yes	Yes	Yes	Yes
Further protocols				
■ PROFIBUS	Yes	Yes	Yes	Yes
■ MPI	Yes	Yes	Yes	Yes
Ambient conditions				
Mounting position	vertical	vertical	vertical	vertical
maximum permissible angle of inclination without external ventilation	35°	35°	35°	35°
Operating temperature				
■ Operation (vertical installation)				
■ in vertical mounting position/ minimum	0 °C	0 °C	0 °C	0 °C
■ in vertical mounting position/ maximum	50 °C	50 °C	50 °C	50 °C
■ Operation (max. tilt angle)				
■ at maximum tilt angle/minimum	0 °C	0 °C	0 °C	0 °C
■ at maximum tilt angle/maximum	40 °C	40 °C	40 °C	40 °C
■ Operation (vertical installation, portrait				

format)				
■ in vertical mounting position/ minimum	0 °C	0 °C	0 °C	0 °C
■ in vertical mounting position/ maximum	40 °C	40 °C	40 °C	40 °C
■ Operation (max. tilt angle, portrait format)				
■ at maximum tilt angle/minimum	0 °C	0 °C	0 °C	0 °C
■ at maximum tilt angle/maximum	35 °C	35 °C	35 °C	35 °C
Relative humidity				
■ max. relative humidity	90 %	90 %	90 %	90 %
Degree and class of protection				
Type of protection	IP20	IP20	IP20	IP20
IP (at the front)	IP65	IP65	IP65	IP65
Enclosure Type 4 at the front	Yes	Yes	Yes	Yes
Enclosure type 4x at the front	Yes	Yes	Yes	Yes
Standards, approvals, certificates				
CE	Yes	Yes	Yes	Yes
KC approval	Yes	Yes	Yes	Yes
cULus	Yes	Yes	Yes	Yes
C-TICK	Yes	Yes	Yes	Yes
FM Class I Div. 2	Yes	Yes	Yes	Yes
GL	Yes; Available soon	Yes; Available soon	Yes; Available soon	Yes; Available soon
ABS	Yes; Available soon	Yes; Available soon	Yes; Available soon	Yes; Available soon
BV	Yes; Available soon	Yes; Available soon	Yes; Available soon	Yes; Available soon
DNV	Yes; Available soon	Yes; Available soon	Yes; Available soon	Yes; Available soon
LRS	Yes; Available soon	Yes; Available soon	Yes; Available soon	Yes; Available soon

Class NK	Yes; Available soon	Yes; Available soon	Yes; Available soon	Yes; Available soon
PRS	No	No	No	No
Use in hazardous areas				
■ EX zone 2	Yes; Available soon	Yes; Available soon	Yes; Available soon	Yes; Available soon
■ EX zone 22	Yes; Available soon	Yes; Available soon	Yes; Available soon	Yes; Available soon
■ Class I Zone 1	No	No	No	No
■ Class I Zone 2, Division 2	Yes; Available soon	Yes; Available soon	Yes; Available soon	Yes; Available soon
Configuration				
Configuration software				
■ STEP 7 Basic (TIA Portal)	No	No	No	No
■ STEP 7 Professional (TIA Portal)	No	No	No	No
■ WinCC flexible Compact	No	No	No	No
■ WinCC flexible Standard	No	No	No	No
■ WinCC flexible Advanced	No	No	No	No
■ WinCC Basic (TIA Portal)	No	No	No	No
■ WinCC Comfort (TIA Portal)	Yes; from V11	Yes; from V11	Yes; from V11	Yes; from V11
■ WinCC Advanced (TIA Portal)	Yes; from V11	Yes; from V11	Yes; from V11	Yes; from V11
■ WinCC Professional (TIA Portal)	Yes; from V11	Yes; from V11	Yes; from V11	Yes; from V11
Languages				
Online languages				
■ Number of online/runtime languages	32	32	32	32
Languages				
■ Languages per project	32	32	32	32
Functionality under WinCC flexible				

Libraries	Yes	Yes	Yes	Yes
Applications/options				
■ Internet Explorer	Yes	Yes	Yes	Yes
■ Pocket Word	Yes	Yes	Yes	Yes
■ Pocket Excel	Yes	Yes	Yes	Yes
■ PDF Viewer	Yes	Yes	Yes	Yes
■ Media Player	Yes	Yes	Yes	Yes
■ Sm@rtService	Yes	Yes	Yes	Yes
Number of Visual Basic Scripts				
■ Number	50	100	100	100
With alarm logging system (incl. buffer and acknowledgment)				
■ Number of messages	2 000	4 000	4 000	4 000
■ Message buffer				
■ Number of entries	256	1 024	1 024	1 024
■ Circulating buffer	Yes	Yes	Yes	Yes
■ retentive	Yes	Yes	Yes	Yes
■ maintenance-free	Yes	Yes	Yes	Yes
Recipes				
■ Recipes	100	300	300	300
■ Data records per recipe	200	500	500	500
■ Entries per data record	200	1000	1000	1000
■ integrated Flash	256 kbyte	1 Mbyte	1 Mbyte	1 Mbyte
■ expandable	Yes	Yes	Yes	Yes
Number of process images				
■ Process images	500	500	500	500
■ Variables	1 024	2 048	2 048	2 048
Lists				
■ Text lists	300	500	500	500
■ Number of entries in text lists	30	500	500	500

■ Graphics list	100	500	500	500
■ Number of entries in graphics lists	30	500	500	500
Archiving				
■ Number of archives per project	10	50	50	50
■ Number of measuring points per project	100	2 048	2 048	2 048
■ Number of entries per archive	10 000	20 000	20 000	20 000
Security				
■ Number of user groups	50	50	50	50
■ Number of users	50	50	50	50
■ Passwords exportable	Yes	Yes	Yes	Yes
Process coupling				
■ S7-1200				
■ MPI	Yes	Yes	Yes	Yes
■ PROFIBUS DP	Yes	Yes	Yes	Yes
■ PROFINET	Yes	Yes	Yes	Yes
■ S7-200				
■ PPI (point-to-point)	Yes	Yes	Yes	Yes
■ PPI network	Yes	Yes	Yes	Yes
■ MPI	Yes	Yes	Yes	Yes
■ PROFIBUS DP	Yes	Yes	Yes	Yes
■ Ethernet	Yes	Yes	Yes	Yes
■ S7-300/400				
■ MPI	Yes	Yes	Yes	Yes
■ PROFIBUS DP	Yes	Yes	Yes	Yes
■ PROFINET	Yes	Yes	Yes	Yes
■ WinAC MP	Yes	Yes	Yes	Yes
■ Win AC				
■ TCP/IP	Yes	Yes	Yes	Yes
■ SINUMERIK	No	No	No	No
■ SIMOTION	No	No	No	No

■ Allen Bradley (EtherNet/IP)	Yes	Yes	Yes	Yes
■ Allen Bradley (DF1)	Yes	Yes	Yes	Yes
■ Mitsubishi (MC TCP/IP)	Yes	Yes	Yes	Yes
■ Mitsubishi (FX)	Yes	Yes	Yes	Yes
■ OMRON (LINK/Multilink)	Yes	Yes	Yes	Yes
■ OMRON (LINK/Multilink)	Yes	Yes	Yes	Yes
■ Modicon (Modbus TCP/IP)	Yes	Yes	Yes	Yes
■ Modicon (Modbus)	Yes	Yes	Yes	Yes
■ other non-Siemens drivers	Yes	Yes	Yes	Yes
Service tools/configuration aids				
■ Backup/restore	Yes	Yes	Yes	Yes
■ Backup/Restore automatically	Yes	Yes	Yes	Yes
■ Simulation	Yes	Yes	Yes	Yes
■ Device switchover	Yes	Yes	Yes	Yes
I/O				
I/O devices				
■ Printer	Yes	Yes	Yes	Yes
Mounting				
Mounting in portrait format possible	Yes	Yes	Yes	Yes
Mounting in landscape format possible	Yes	Yes	Yes	Yes
Mechanics/material				
Type of housing (front)				
■ Plastic	Yes	No	No	No
■ Aluminum	No	Yes	Yes	Yes
Dimensions				
Width of the housing front	140 mm	214 mm	274 mm	330 mm
Height of housing front	116 mm	158 mm	190 mm	241 mm
Depth/installation dimension	49 mm	63 mm	63 mm	65 mm

Mounting cutout, width	123 mm	197 mm	251 mm	310 mm
Mounting cutout, height	99 mm	141 mm	166 mm	221 mm
Weight				
Weight without packaging	0.6 kg	1.4 kg	1.9 kg	2.8 kg

	6AV2 124-1DC01-0AX0	6AV2 124-1GC01-0AX0	6AV2 124-1JC01-0AX0	6AV2 124-1MC01-0AX0
	KP400 Comfort	KP700 Comfort	KP900 Comfort	KP1200 Comfort
Display				
Design of display	TFT	TFT	TFT	TFT
Screen diagonal	4.3 in	7 in	9 in	12.1 in
Display width	95 mm	152.4 mm	195 mm	261.1 mm
Display height	53.8 mm	91.4 mm	117 mm	163.2 mm
Number of colors	16 777 200	16 777 200	16 777 200	16 777 200
Resolution (pixels)				
■ Horizontal image resolution	480	800	800	1 280
■ Vertical image resolution	272	480	480	800
Backlighting				
■ MTBF backlighting (at 25 °C)	50 000 h; At 50 °C	50 000 h; At 50 °C	50 000 h; At 50 °C	50 000 h; At 50 °C
■ Dimmable backlight	Yes; 0-100 %	Yes; 0-100 %	Yes; 0-100 %	Yes; 0-100 %
Control elements				
Keyboard fonts				
■ Number of function keys	8	24	26	34
■ Keys with LED	Yes	Yes	Yes	Yes
■ System keys	Yes	Yes	Yes	Yes
Touch operation				
■ Design as touch screen	No	No	No	No
Supply voltage				
Type of supply voltage	DC	DC	DC	DC
Rated voltage/DC	24 V	24 V	24 V	24 V
permissible range, lower limit (DC)	19.2 V	19.2 V	19.2 V	19.2 V
permissible range, upper limit (DC)	28.8 V	28.8 V	28.8 V	28.8 V

Memory				
Usable memory for user data	4 Mbyte	12 Mbyte	12 Mbyte	12 Mbyte
Type of output				
Acoustics	Buzzer	Speaker	Speaker	Speaker
■ Buzzer	Yes	No	No	No
■ Speaker	No	Yes	Yes	Yes
Time of day				
Clock				
■ Hardware clock (real-time clock)	Yes	Yes	Yes	Yes
■ Software clock	No	No	No	No
■ Battery-backed	Yes	Yes	Yes	Yes
■ Synchronizable	Yes	Yes	Yes	Yes
Interfaces				
Number of RS 485 interfaces	1	1	1	1
Number of USB interfaces	2; USB 2.0	3; USB 2.0	3; USB 2.0	3; USB 2.0
Number of SD card slots	2	2	2	2
Industrial Ethernet				
■ Number of Industrial Ethernet interfaces	1	2	2	2
■ IRT, supported	No	Yes	Yes	Yes
■ MRP supported	No	No	No	No
■ Number of ports of the integrated switch	1	2	2	2
Protocols				
PROFINET	Yes	Yes	Yes	Yes
Supports protocol for PROFINET IO	Yes	Yes	Yes	Yes
Further protocols				
■ PROFIBUS	Yes	Yes	Yes	Yes
■ MPI	Yes	Yes	Yes	Yes
Ambient conditions				
Mounting position	vertical	vertical	vertical	vertical
maximum permissible angle of inclination without external ventilation	35°	35°	35°	35°

Operating temperature				
■ Operation (vertical installation)				
■ in vertical mounting position/ minimum	0 °C	0 °C	0 °C	0 °C
■ in vertical mounting position/ maximum	50 °C	50 °C	50 °C	50 °C
■ Operation (max. tilt angle)				
■ at maximum tilt angle/minimum	0 °C	0 °C	0 °C	0 °C
■ at maximum tilt angle/maximum	40 °C	40 °C	40 °C	40 °C
■ Operation (vertical installation, portrait format)				
■ in vertical mounting position/ minimum	0 °C	0 °C	0 °C	0 °C
■ in vertical mounting position/ maximum	40 °C	40 °C	40 °C	40 °C
■ Operation (max. tilt angle, portrait format)				
■ at maximum tilt angle/minimum	0 °C	0 °C	0 °C	0 °C
■ at maximum tilt angle/maximum	35 °C	35 °C	35 °C	35 °C
Relative humidity				
■ max. relative humidity	90 %	90 %	90 %	90 %
Degree and class of protection				
Type of protection	IP20	IP20	IP20	IP20
IP (at the front)	IP65	IP65	IP65	IP65

Enclosure Type 4 at the front	Yes	Yes	Yes	Yes
Enclosure type 4x at the front	Yes	Yes	Yes	Yes
Standards, approvals, certificates				
CE	Yes	Yes	Yes	Yes
KC approval	Yes	Yes	Yes	Yes
cULus	Yes	Yes	Yes	Yes
C-TICK	Yes	Yes	Yes	Yes
FM Class I Div. 2	Yes	Yes	Yes	Yes
GL	Yes; Available soon	Yes; Available soon	Yes; Available soon	Yes; Available soon
ABS	Yes; Available soon	Yes; Available soon	Yes; Available soon	Yes; Available soon
BV	Yes; Available soon	Yes; Available soon	Yes; Available soon	Yes; Available soon
DNV	Yes; Available soon	Yes; Available soon	Yes; Available soon	Yes; Available soon
LRS	Yes; Available soon	Yes; Available soon	Yes; Available soon	Yes; Available soon
Class NK	Yes; Available soon	Yes; Available soon	Yes; Available soon	Yes; Available soon
PRS	No	No	No	No
Use in hazardous areas				
■ EX zone 2	Yes; Available soon	Yes; Available soon	Yes; Available soon	Yes; Available soon
■ EX zone 22	Yes; Available soon	Yes; Available soon	Yes; Available soon	Yes; Available soon
■ Class I Zone 1	No	No	No	No
■ Class I Zone 2, Division 2	Yes; Available soon	Yes; Available soon	Yes; Available soon	Yes; Available soon
Configuration				
Configuration software				
■ STEP 7 Basic (TIA Portal)	No	No	No	No
■ STEP 7 Professional (TIA Portal)	No	No	No	No
■ WinCC flexible Compact	No	No	No	No
■ WinCC flexible Standard	No	No	No	No
■ WinCC flexible	No	No	No	No

Advanced				
■ WinCC Basic (TIA Portal)	No	No	No	No
■ WinCC Comfort (TIA Portal)	Yes; from V11	Yes; from V11	Yes; from V11	Yes; from V11
■ WinCC Advanced (TIA Portal)	Yes; from V11	Yes; from V11	Yes; from V11	Yes; from V11
■ WinCC Professional (TIA Portal)	Yes; from V11	Yes; from V11	Yes; from V11	Yes; from V11
Languages				
Online languages				
■ Number of online/runtime languages	32	32	32	32
Languages				
■ Languages per project	32	32	32	32
Functionality under WinCC flexible				
Libraries	Yes	Yes	Yes	Yes
Applications/options				
■ Internet Explorer	Yes	Yes	Yes	Yes
■ Pocket Word	Yes	Yes	Yes	Yes
■ Pocket Excel	Yes	Yes	Yes	Yes
■ PDF Viewer	Yes	Yes	Yes	Yes
■ Media Player	Yes	Yes	Yes	Yes
■ Sm@rtService	Yes	Yes	Yes	Yes
Number of Visual Basic Scripts				
■ Number	50	100	100	100
With alarm logging system (incl. buffer and acknowledgment)				
■ Number of messages	2 000	4 000	4 000	4 000
■ Message buffer				
■ Number of entries	256	1 024	1 024	1 024
■ Circulating buffer	Yes	Yes	Yes	Yes
■ retentive	Yes	Yes	Yes	Yes

■ maintenance-free	Yes	Yes	Yes	Yes
Recipes				
■ Recipes	100	300	300	300
■ Data records per recipe	200	500	500	500
■ Entries per data record	200	1000	1000	1000
■ integrated Flash	256 kbyte	1 Mbyte	1 Mbyte	1 Mbyte
■ expandable	Yes	Yes	Yes	Yes
Number of process images				
■ Process images	500	500	500	500
■ Variables	1 024	2 048	2 048	2 048
Lists				
■ Text lists	300	500	500	500
■ Number of entries in text lists	30	500	500	500
■ Graphics list	100	500	500	500
■ Number of entries in graphics lists	30	500	500	500
Archiving				
■ Number of archives per project	10	50	50	50
■ Number of measuring points per project	100	2 048	2 048	2 048
■ Number of entries per archive	10 000	20 000	20 000	20 000
Security				
■ Number of user groups	50	50	50	50
■ Number of users	50	50	50	50
■ Passwords exportable	Yes	Yes	Yes	Yes
Process coupling				
■ S7-1200				
■ MPI	Yes	Yes	Yes	Yes
■ PROFIBUS DP	Yes	Yes	Yes	Yes
	Yes	Yes	Yes	Yes

■ PROFINET				
■ S7-200				
■ PPI (point-to-point)	Yes	Yes	Yes	Yes
■ PPI network	Yes	Yes	Yes	Yes
■ MPI	Yes	Yes	Yes	Yes
■ PROFIBUS DP	Yes	Yes	Yes	Yes
■ Ethernet	Yes	Yes	Yes	Yes
■ S7-300/400				
■ MPI	Yes	Yes	Yes	Yes
■ PROFIBUS DP	Yes	Yes	Yes	Yes
■ PROFINET	Yes	Yes	Yes	Yes
■ WinAC MP	Yes	Yes	Yes	Yes
■ Win AC				Yes
■ TCP/IP	Yes	Yes	Yes	Yes
■ SINUMERIK	No	No	No	No
■ SIMOTION	No	No	No	No
■ Allen Bradley (EtherNet/IP)	Yes	Yes	Yes	Yes
■ Allen Bradley (DF1)	Yes	Yes	Yes	Yes
■ Mitsubishi (MC TCP/IP)	Yes	Yes	Yes	Yes
■ Mitsubishi (FX)	Yes	Yes	Yes	Yes
■ OMRON (LINK/Multilink)	Yes	Yes	Yes	Yes
■ OMRON (LINK/Multilink)	Yes	Yes	Yes	Yes
■ Modicon (Modbus TCP/IP)	Yes	Yes	Yes	Yes
■ Modicon (Modbus)	Yes	Yes	Yes	Yes
■ other non-Siemens drivers	Yes	Yes	Yes	Yes
Service tools/configuration aids				
■ Backup/restore	Yes	Yes	Yes	Yes
■ Backup/Restore automatically	Yes	Yes	Yes	Yes
■ Simulation	Yes	Yes	Yes	Yes

■ Device switchover	Yes	Yes	Yes	Yes
I/O				
I/O devices				
■ Printer	Yes	Yes	Yes	Yes
Mounting				
Mounting in portrait format possible	No	No	No	Yes
Mounting in landscape format possible	Yes	Yes	Yes	Yes
Mechanics/material				
Type of housing (front)				
■ Plastic	Yes	No	No	No
■ Aluminum	No	Yes	Yes	Yes
Dimensions				
Width of the housing front	152 mm	308 mm	362 mm	454 mm
Height of housing front	188 mm	204 mm	230 mm	289 mm
Depth/installation dimension	49 mm	63 mm	63 mm	65 mm
Mounting cutout, width	135 mm	281 mm	338 mm	434 mm
Mounting cutout, height	171 mm	177 mm	206 mm	269 mm
Weight				
Weight without packaging	0.8 kg	2.2 kg	2.7 kg	4.4 kg

Dimensional drawings

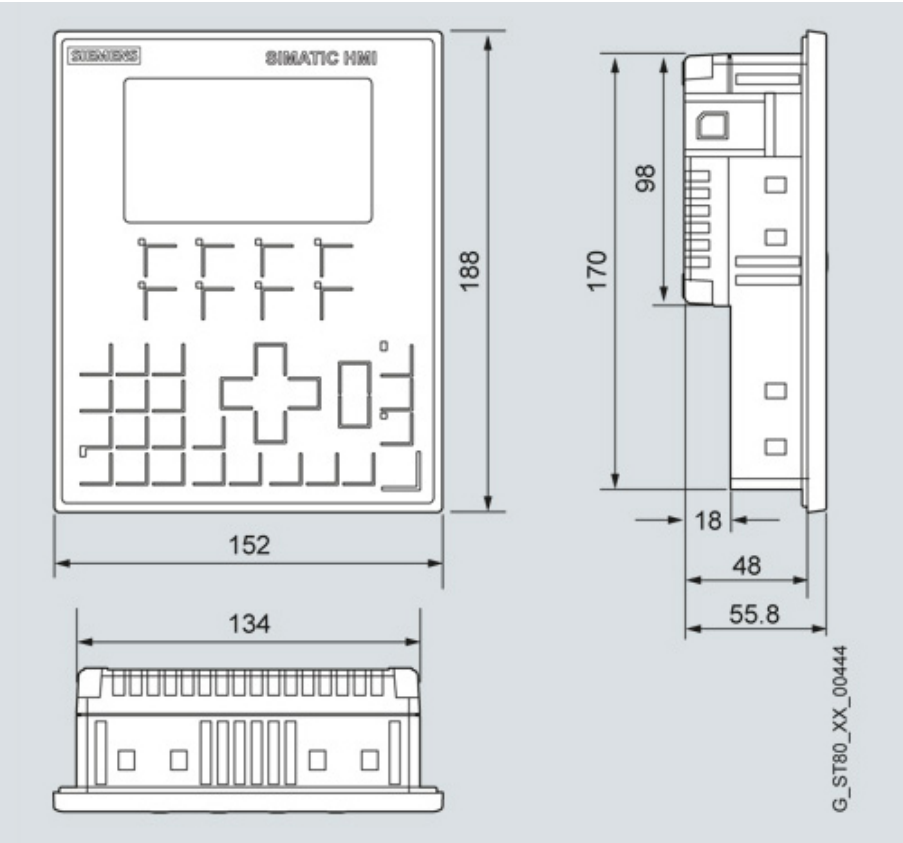

KP400 Comfort

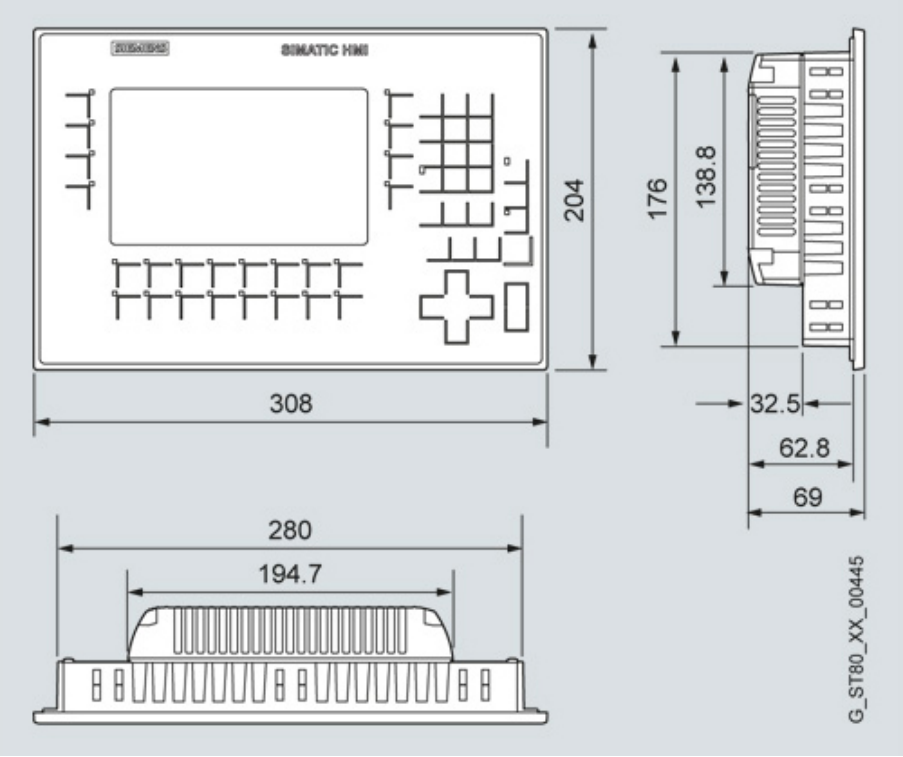

KP700 Comfort

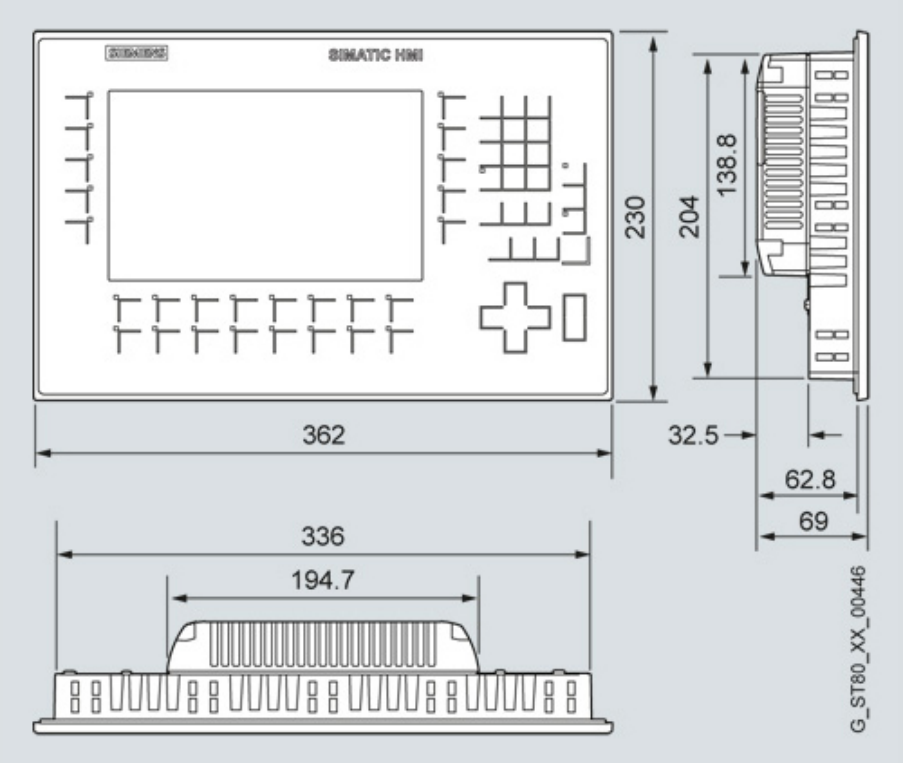

KP900 Comfort

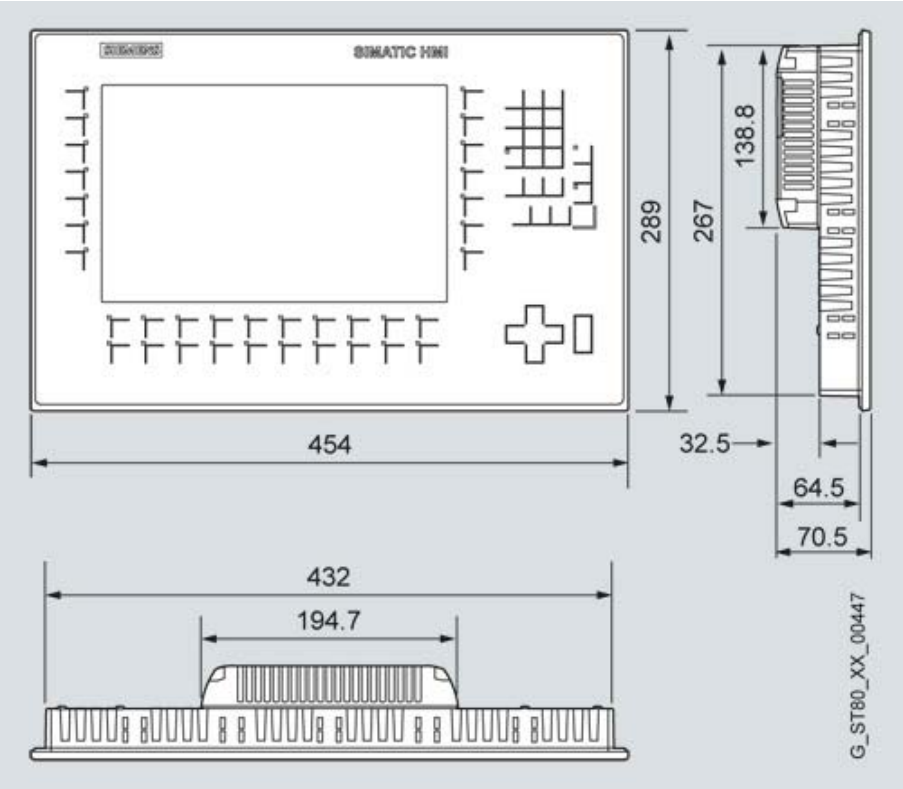

KP1200 Comfort

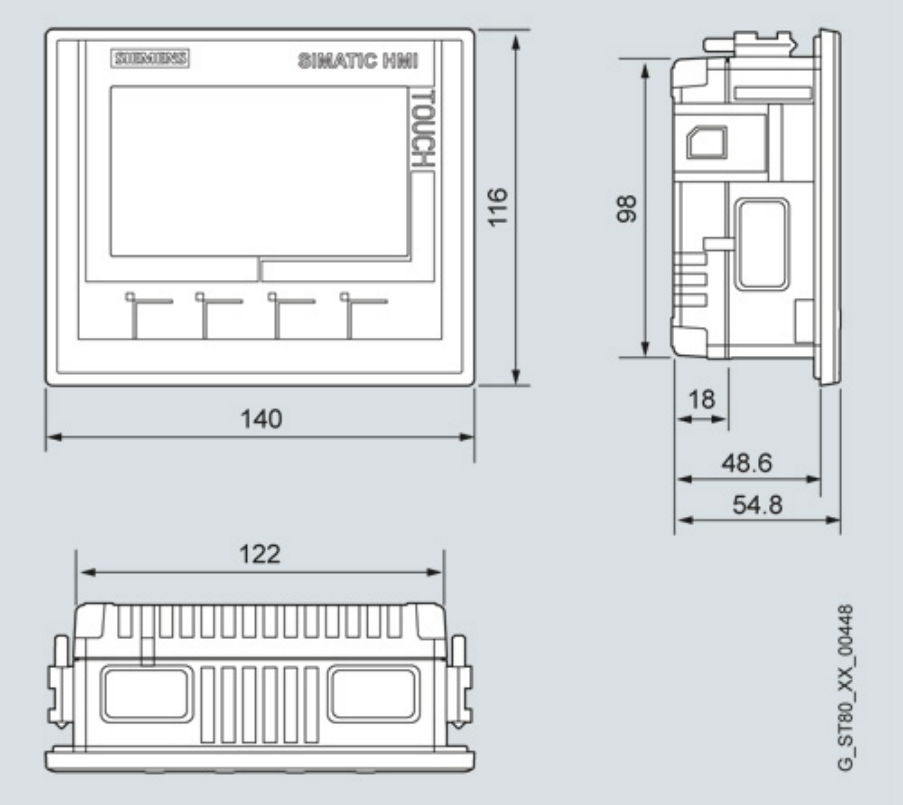

KTP400 Comfort

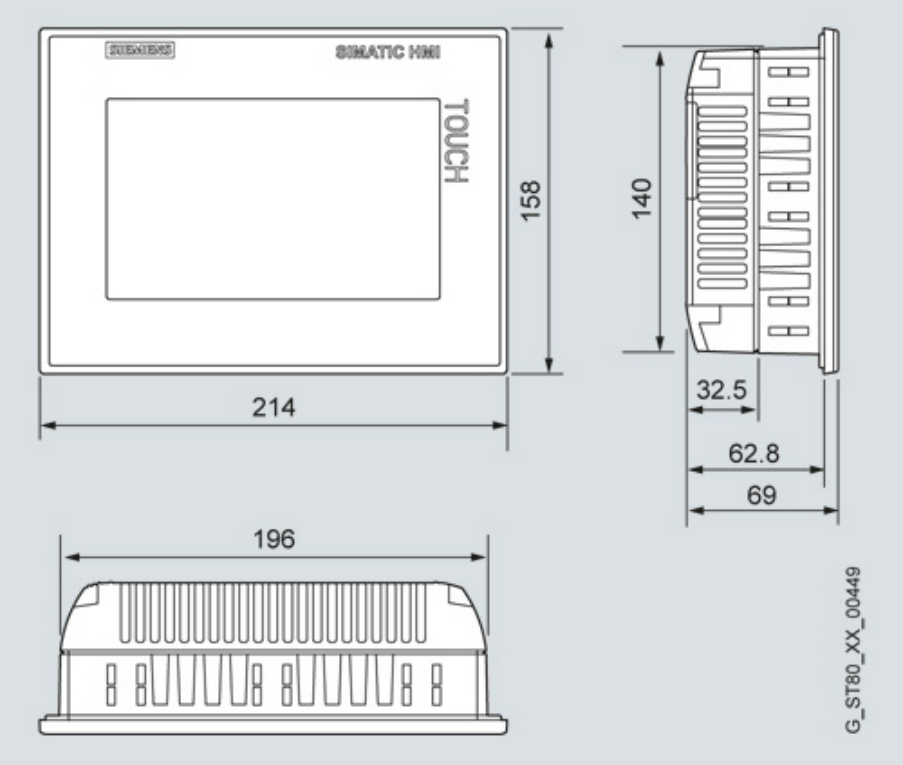

TP700 Comfort

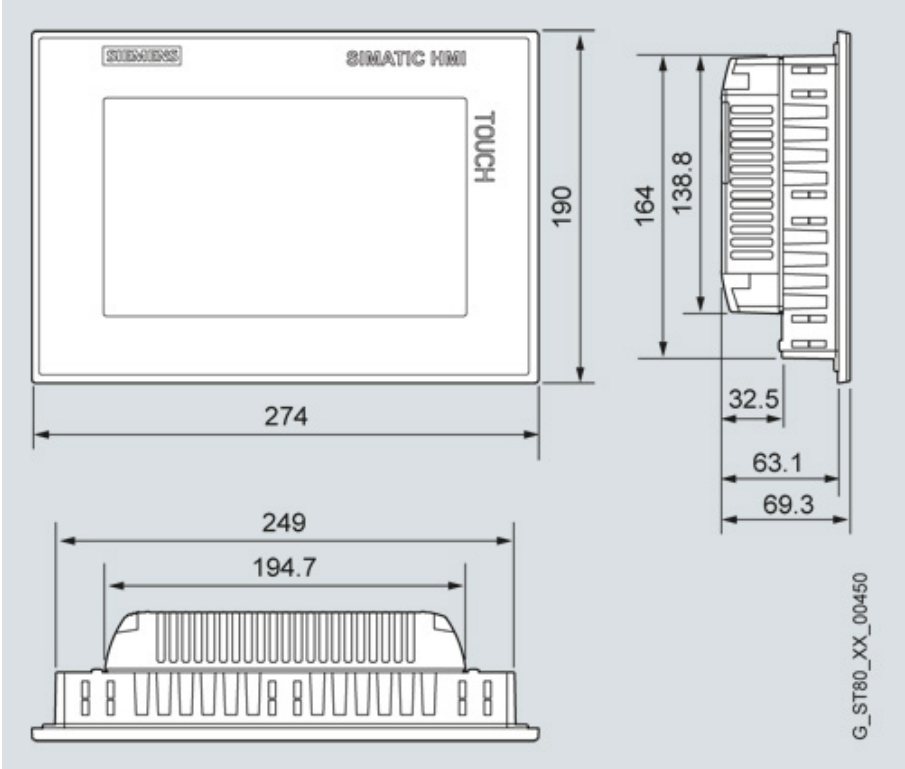

TP900 Comfort

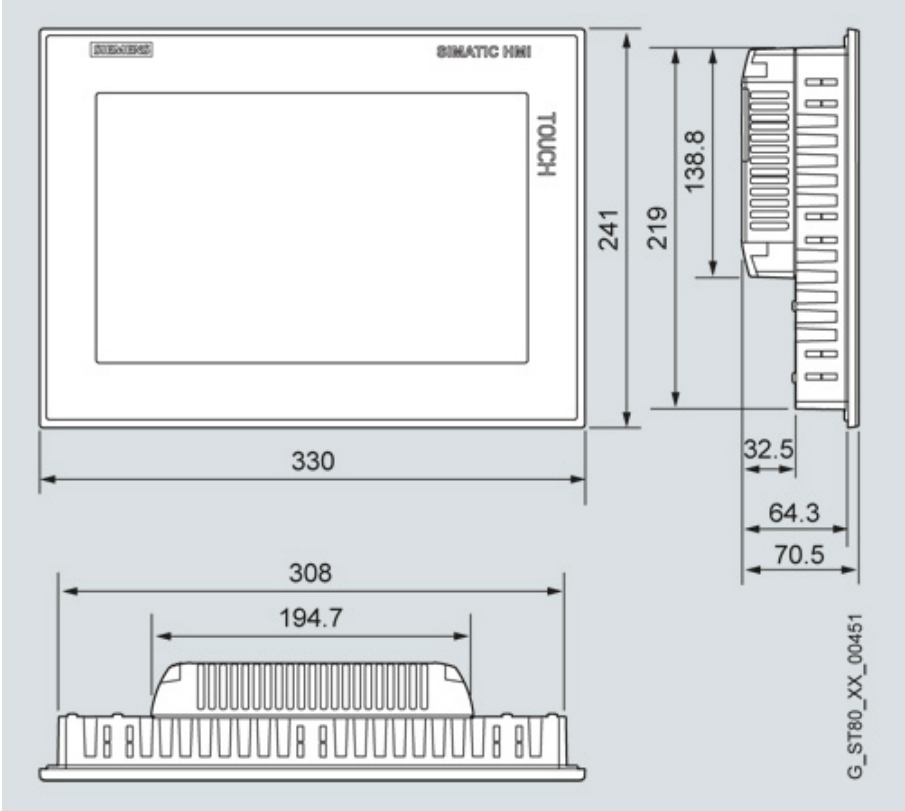

TP1200 Comfort

More information

Further information can be found in the Internet at:

http://www.siemens.com/simatic-comfort-panels

Note

Do you require a specific modification or extension to the products described here? If so, please see the "Custom Products" section. There you will find information about additional and generally available sector-specific products as well as options for customer-specific modification and adaptation.

Extract from the online catalog

RAD-ISM-900-EN-BD

Order No.: 2900016

http://eshop.phoenixcontact.de/phoenix/treeViewClick.do?UID=2900016

Wireless transceiver (transmitter and receiver) with Ethernet, RS-232, RS-485 interfaces, for 900 MHz ISM band (America).This product is exclusively for export outside of the European Economic Area (EEA).

D W H

RAD-Line Wireless

Ethernet

Product notes
WEEE/RoHS-compliant since: 11/03/2008

Commercial data	
GTIN (EAN)	4 046356 461580
Note	Made-to-order
sales group	H172
Pack	1 pcs.
Customs tariff	85176200
Catalog page information	Page 674 (IF-2011)

http://www.download.phoenixcontact.com Please note that the data given here has been taken from the online catalog. For comprehensive information and data, please refer to the user documentation. The General Terms and Conditions of Use apply to Internet downloads.

Technical data

Wireless set

Set contents	1 transceiver

Wireless path

Direction	Bi-directional

Frequency range	902 MHz ... 928 MHz
Transmission power	1 W (adjustable in 1 dBm increments)
Transmit capacity, minimum	10 dBm
Transmit capacity, maximum	30 dBm

Serial interface

Name	RS-232
Data rate	300 ... 57,6 kBit/s
Connection method	9-pos. D-SUB (female connector)
File format/coding	Asynchronous
Data flow control/protocols	RTS/CTS
Name	RS-485/RS-422
Connection method	COMBICON plug-in screw terminal block

Supply

Supply voltage	24 V DC
Supply voltage range	11 V DC ... 30 V DC
Max. current consumption	250 mA (at 24 V DC)

General data

Width	52 mm
Height	99 mm
Depth	115 mm
Ambient temperature (operation)	-40 °C ... 65 °C
Ambient temperature (storage/transport)	-40 °C ... 75 °C
Degree of protection	IP20
Mounting position	Any
Assembly instructions	on standard DIN rail NS 35 in accordance with EN 60715
Housing material	Polyamide PA non-reinforced with aluminum heatsink
Conformance	FCC Directive, Part 15.247
	ISC Directive RSS 210
UL, USA / Canada	Class I, Div. 2, Groups A, B, C, D

Connection data

Conductor cross section solid min.	0.2 mm²
Conductor cross section solid max.	4 mm²
Conductor cross section stranded min.	0.2 mm²

Conductor cross section stranded max.	2.5 mm²
Conductor cross section AWG/kcmil min.	24
Conductor cross section AWG/kcmil max	14
Connection method	Screw connection
Stripping length	8 mm
Screw thread	M3

Certificates / Approvals

Certification Ex:	CUL-EX LIS, UL-EX LIS

Accessories

Item	Designation	Description
Cable/conductor		
2867597	RAD-CAB-RG213-25	Antenna extension cable, length: 25 ft
General		
2867160	RAD-ISM-900-ANT-OMNI-0-6	Omnidirectional antenna, IP65 protection, cable length 2 m, connection MCX (male)
2867791	RAD-ISM-900-ANT-OMNI-FG-3-N	Omnidirectional antenna, IP65 protection, gain 5 dBi, connection N (female)
2867830	RAD-ISM-900-ANT-YAGI-6.5-50-AS	Panel antenna with surge protection, adapter cable MCX->N and assembly material, IP65 protection, gain 8.5 dBi, cable length 15.2 m, connection N (female)
Plug/Adapter		
2885207	RAD-CON-MCX90-N-SS	Adapter cable, pigtail 120 cm 90° MCX(m) -> N(m)

Diagrams/Drawings

Block diagram

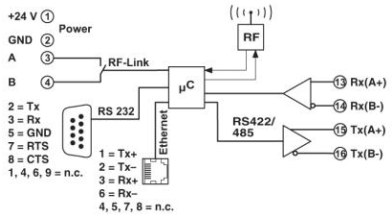

Address

PHOENIX CONTACT GmbH & Co. KG
Flachsmarktstr. 8
32825 Blomberg,Germany
Phone +49 5235 3 00
Fax +49 5235 3 41200
http://www.phoenixcontact.com

© 2011 Phoenix Contact
Technical modifications reserved;

Mini Power-Zone® Unit Substation

Catalog
7440CT0901

2009

Class 7440

CONTENTS

Description . . . . . Page

Product Description 2
General Information 3
Selection Tables 6
Enclosure Drawings 10
Wiring Diagrams. 16
Additional Information. 17
Product Specifications 18

SQUARE D

by Schneider Electric

Product Description

The Mini Power-Zone Unit Substation from Schneider Electric is a miniaturized version of our Power-Zone Unit Substation. Included are:

- Primary Main Circuit Breaker
- Sealed Step-Down Transformer
- Secondary Main Circuit Breaker
- Distribution Panelboard

Because the Mini Power-Zone Unit Substation is furnished as a complete package, considerable savings in installation time and costs can be realized.

Features

- NEMA 3R enclosure; suitable for both indoor and outdoor use
- Rated for Service Entrance use
- 185 °C insulation with 115 °C temperature rise
- Sealed, epoxy-resin encapsulated transformer
- Panel section has copper bus and uses Square D® brand QO® style circuit breakers
- UL Listed per UL 1062 File E92978.

Mini Power-Zone centers are furnished with factory-installed primary main and secondary main circuit breakers only. Circuit breaker ratings are selected to meet National Electrical Code® (NEC®) requirements and to coordinate with transformer magnetizing inrush current.

Feeder circuit breakers are standard QO plug-on type, which can be ordered, as required, from your local Schneider Electric distributor. If ground fault protection is required, Square D brand Qwik-Gard® circuit breakers may be used in all sizes. Tandem circuit breakers are not permitted.

Typical Applications

- Small shopping centers
- Portable offices
- Assembly lines
- Construction site
- Emergency power
- Temporary power
- Guard shacks/other shacks
- Retail
- Areas with limited space

The Mini Power-Zone Unit Substation uses a separate transformer and panelboard section. This allows the panel section to be removed and wired first, if desired. Also the transformer can be replaced without disturbing the panel section and associated wiring. The new transformer simply slides into the top of the panel section, and the primary and secondary leads are reconnected to the main circuit breakers.

© 2009 Schneider Electric
All Rights Reserved

General Information

- Available in single and three phase configurations
  - Single phase configuration supplies a 120/240 branch panelboard
  - Three phase configuration supplies a 208Y/120 branch panelboard
- Two panelboard options for Mini Power-Zone products protected by a backfeed (secondary main) circuit breaker:
  - QO load center interior (MPZ prefix); branch circuit accepts QO (plug-on) circuit breakers only
  - NQ panelboard interior (MPZB prefix); branch circuit accepts QO or QOB (bolt-on) circuit breakers
- Available in multiple interrupting ratings, based on the customer's available fault current.
  - FAL primary main for 18 kAIC
  - FHL primary main for 25 kAIC
  - HJ primary main for 65 kAIC; only available with the MPZB option

  A shunt trip option can be added to the primary main circuit breaker.
- Two choices of enclosure material
  - Powder coat painted, standard hot-rolled steel
  - Powder coat painted, 316 stainless steel
- All designs are NEMA Type 3R rated for indoor/outdoor use
- Not available as a packaged solution for NEMA Type 4X applications. However, Schneider Electric does offer all three components separately in NEMA Type 4X enclosures:
  - NEMA Type 4X enclosed circuit breakers (primary main)
  - NEMA Type 4X encapsulated transformers
  - NEMA Type 4X NQ panelboards

Contact your local Schneider Electric representative for catalog numbers, price, and availabilty.

© 2009 Schneider Electric
All Rights Reserved

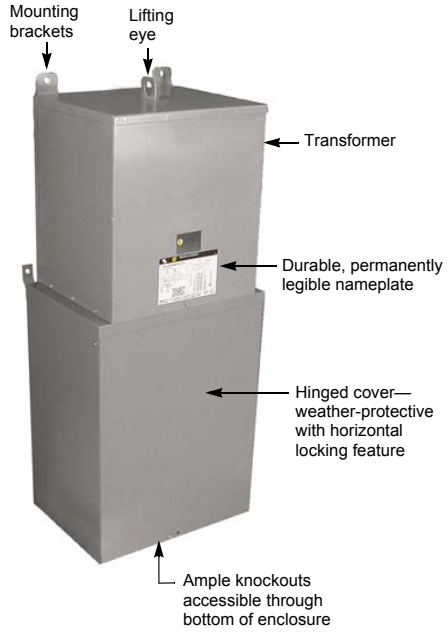

Single Phase Unit Substation

The single phase Mini Power-Zone Unit Substation is UL Listed for indoor and outdoor applications.

Standard Square D brand QO plug-on branch circuit breakers or Qwik-Gard ground fault circuit breakers may be ordered from any Schneider Electric distributor as required.

Shunt trip capability on the primary circuit breaker is available by special order if your local fire department requires remote tripping provisions where used as service equipment.

UL Listed, electrostatically shielded Mini Power-Zone units are also available by special order.

Interior view showing primary main, secondary main, and plug-on panel.

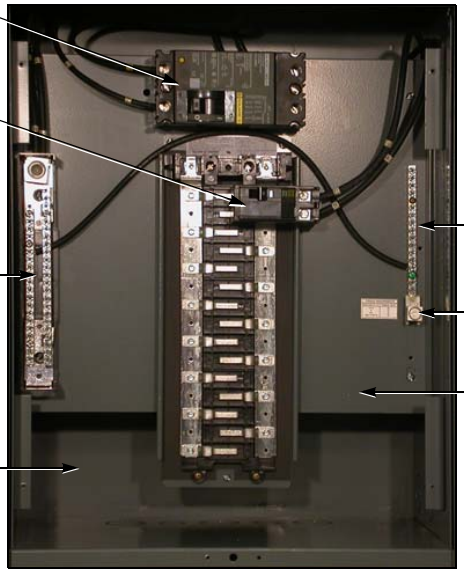

© 2009 Schneider Electric
All Rights Reserved

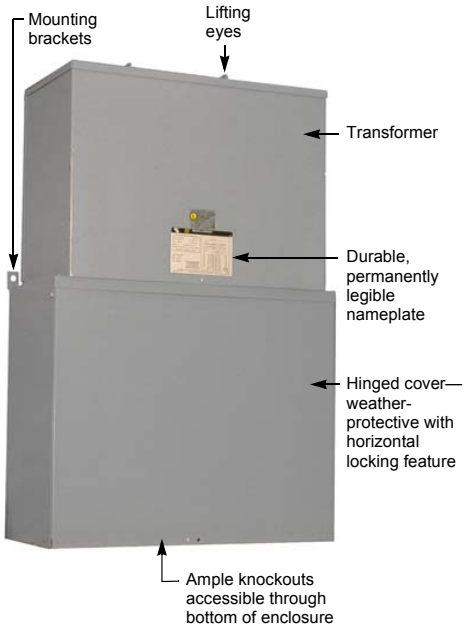

Three Phase Unit Substation

The three phase Mini Power-Zone Unit Substation is UL Listed for indoor and outdoor applications.

Standard Square D brand QO plug-on branch circuit breakers or Qwik-Gard ground fault circuit breakers may be ordered from any Schneider Electric distributor as required.

Shunt trip capability on the primary circuit breaker is available by special order if your local fire department requires remote tripping provisions where used as service equipment.

UL Listed, electrostatically shielded Mini Power-Zone units are also available by special order.

Interior view showing primary main, secondary main, and plug-on panel.

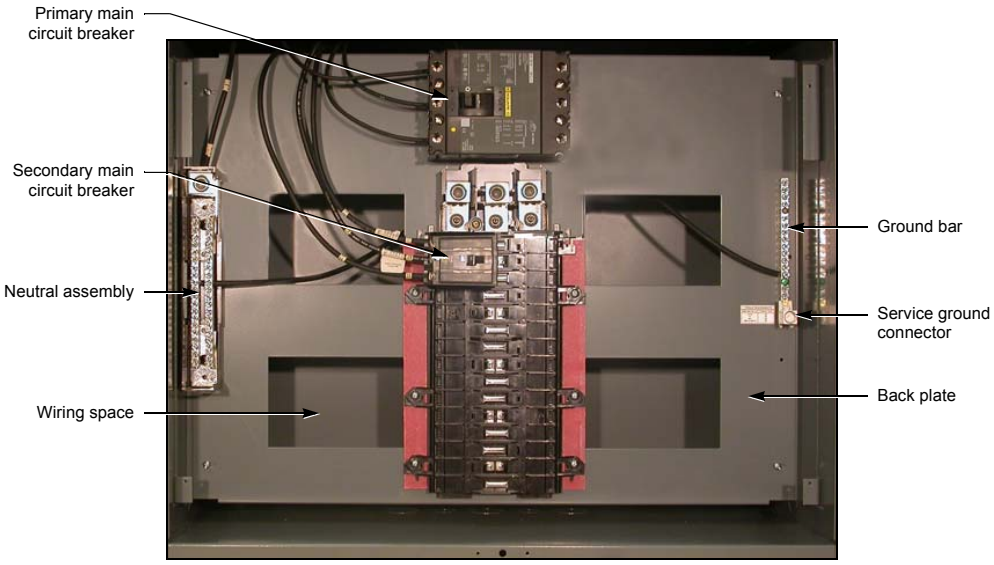

© 2009 Schneider Electric
All Rights Reserved

Selection Tables

NOTE: The enclosure drawings referenced in the Enclosure column of the selection tables are shown on pages 10–15. The wiring diagrams referenced in the selection tables are shown on page 16.

Single Phase

480 Volt Primary, Load Center Interior, Interrupt Rating 18 kAIR, NEMA Type 3R

kVA	Part Number	Primary Main	Secondary Main	Feeder Circuit Breakers			Enclosure	Wiring Diagram
				Maximum Number		Maximum Ampere Rating		
				1 pole	2 pole			
5	MPZ5S40F	FAL24015	QO230	10	5	20	A	i
7.5	MPZ7S40F	FAL24020	QO240	10	5	30	A	i
10	MPZ10S40F	FAL24030	QO260	10	5	40	A	i
15	MPZ15S40F	FAL24060	QO280	24	12	60	B	i
25	MPZ25S40F	FAL24100	QO2125	24	12	100	B	i

480 Volt Primary, NQ Panelboard Interior, Interrupt Rating 18 kAIR, NEMA Type 3R

kVA	Part Number	Primary Main	Secondary Main	Feeder Circuit Breakers			Enclosure	Wiring Diagram
				Maximum Number		Maximum Ampere Rating		
				1 pole	2 pole			
5	MPZB5S40F	FAL24015	QOB230	10	5	20	AA	i
7.5	MPZB7S40F	FAL24020	QOB240	10	5	30	AA	i
10	MPZB10S40F	FAL24030	QOB260	10	5	40	AA	i
15	MPZB15S40F	FAL24060	QOB280	24	12	60	BB	i
25	MPZB25S40F	FAL24100	QOB2125	24	12	100	BB	i

480 Volt Primary, Load Center Interior, Interrupt Rating 25 kAIR, NEMA Type 3R

kVA	Part Number	Primary Main	Secondary Main	Feeder Circuit Breakers			Enclosure	Wiring Diagram
				Maximum Number		Maximum Ampere Rating		
				1 pole	2 pole			
5	MPZ5S40F25K	FHL26015	QO230	10	5	20	A	i
7.5	MPZ7S40F25K	FHL26020	QO240	10	5	30	A	i
10	MPZ10S40F25K	FHL26030	QO260	10	5	40	A	i
15	MPZ15S40F25K	FHL26060	QO280	24	12	60	B	i
25	MPZ25S40F25K	FHL26100	QO2125	24	12	100	B	i

480 Volt Primary, NQ Panelboard Interior, Interrupt Rating 25 kAIR, NEMA Type 3R

kVA	Part Number	Primary Main	Secondary Main	Feeder Circuit Breakers			Enclosure	Wiring Diagram
				Maximum Number		Maximum Ampere Rating		
				1 pole	2 pole			
5	MPZB5S40F25K	FHL26015	QOB230	10	5	20	AA	i
7.5	MPZB7S40F25K	FHL26020	QOB240	10	5	30	AA	i
10	MPZB10S40F25K	FHL26030	QOB260	10	5	40	AA	i
15	MPZB15S40F25K	FHL26060	QOB280	24	12	60	BB	i
25	MPZB25S40F25K	FHL26100	QOB2125	24	12	100	BB	i

MPZB7S40F

© 2009 Schneider Electric
All Rights Reserved

Single Phase (continued)

480 Volt Primary, NQ Panelboard Interior, Interrupt Rating 65 kAIR, NEMA Type 3R

kVA	Part Number	Primary Main	Secondary Main	Feeder Circuit Breakers			Enclosure	Wiring Diagram
				Maximum Number		Maximum Ampere Rating		
				1 pole	2 pole			
5	MPZB5S40F65K	HJL26015	QOB230	10	5	20	AA	i
7.5	MPZB7S40F65K	HJL26020	QOB240	10	5	30	AA	i
10	MPZB10S40F65K	HJL26030	QOB260	10	5	40	AA	i
15	MPZB15S40F65K	HJL26060	QOB280	24	12	60	BB	i
25	MPZB25S40F65K	HJL26100	QOB2125	24	12	100	BB	i

Single Phase with 316 Stainless Steel Enclosure

480 Volt Primary, Load Center Interior, Interrupt Rating 18 kAIR, NEMA Type 3R

kVA	Part Number	Primary Main	Secondary Main	Feeder Circuit Breakers			Enclosure	Wiring Diagram
				Maximum Number		Maximum Ampere Rating		
				1 pole	2 pole			
5	MPZ5S40FSS	FAL24015	QO230	10	5	20	A	i
7.5	MPZ7S40FSS	FAL24020	QO240	10	5	30	A	i
10	MPZ10S40FSS	FAL24030	QO260	10	5	40	A	i
15	MPZ15S40FSS	FAL24060	QO280	24	12	60	B	i
25	MPZ25S40FSS	FAL24100	QO2125	24	12	100	B	i

480 Volt Primary, NQ Panelboard Interior, Interrupt Rating 18 kAIR, NEMA Type 3R

kVA	Part Number	Primary Main	Secondary Main	Feeder Circuit Breakers			Enclosure	Wiring Diagram
				Maximum Number		Maximum Ampere Rating		
				1 pole	2 pole			
5	MPZB5S40FSS	FAL24015	QOB230	10	5	20	AA	i
7.5	MPZB7S40FSS	FAL24020	QOB240	10	5	30	AA	i
10	MPZB10S40FSS	FAL24030	QOB260	10	5	40	AA	i
15	MPZB15S40FSS	FAL24060	QOB280	24	12	60	BB	i
25	MPZB25S40FSS	FAL24100	QOB2125	24	12	100	BB	i

© 2009 Schneider Electric
All Rights Reserved

Three Phase

480 Volt Primary, Load Center Interior, Interrupt Rating 18 kAIR, NEMA Type 3R

kVA	Part Number	Primary Main	Secondary Main	Feeder Circuit Breakers			Enclosure	Wiring Diagram
				Maximum Number		Maximum Ampere Rating		
				1 pole	3 pole			
15	MPZ15T2F	FAL34040	QO360	24	8	40	C	ii
22.5	MPZ22T2F	FAL34070	QO380	24	8	60	C	ii
30	MPZ30T2F	FAL34090	QO3100	24	8	80	C	iii

480 Volt Primary, NQ Panelboard Interior, Interrupt Rating 18 kAIR, NEMA Type 3R

kVA	Part Number	Primary Main	Secondary Main	Feeder Circuit Breakers			Enclosure	Wiring Diagram
				Maximum Number		Maximum Ampere Rating		
				1 pole	3 pole			
15	MPZB15T2F	FAL34040	QOB360	24	8	40	CC	ii
22.5	MPZB22T2F	FAL34070	QOB380	24	8	60	CC	ii
30	MPZB30T2F	FAL34090	QOB3100	24	8	80	CC	iii

480 Volt Primary, Load Center Interior, Interrupt Rating 25 kAIR, NEMA Type 3R

kVA	Part Number	Primary Main	Secondary Main	Feeder Circuit Breakers			Enclosure	Wiring Diagram
				Maximum Number		Maximum Ampere Rating		
				1 pole	3 pole			
15	MPZ15T2F25K	FAL34040	QO360	24	8	40	C	ii
22.5	MPZ22T2F25K	FAL34070	QO380	24	8	60	C	ii
30	MPZ30T2F25K	FAL34090	QO3100	24	8	80	C	iii

480 Volt Primary, NQ Panelboard Interior, Interrupt Rating 25 kAIR, NEMA Type 3R

kVA	Part Number	Primary Main	Secondary Main	Feeder Circuit Breakers			Enclosure	Wiring Diagram
				Maximum Number		Maximum Ampere Rating		
				1 pole	3 pole			
15	MPZB15T2F25K	FAL34040	QOB360	24	8	40	CC	ii
22.5	MPZB22T2F25K	FAL34070	QOB380	24	8	60	CC	ii
30	MPZB30T2F25K	FAL34090	QOB3100	24	8	80	CC	iii

480 Volt Primary, NQ Panelboard Interior, Interrupt Rating 65 kAIR, NEMA Type 3R

kVA	Part Number	Primary Main	Secondary Main	Feeder Circuit Breakers			Enclosure	Wiring Diagram
				Maximum Number		Maximum Ampere Rating		
				1 pole	3 pole			
15	MPZB15T2F65K	HJL34040	QOB360	24	8	40	CC	ii
22.5	MPZB22T2F65K	HJL34070	QOB380	24	8	60	CC	ii
30	MPZB30T2F65K	HJL34090	QOB3100	24	8	80	CC	iii

© 2009 Schneider Electric
All Rights Reserved

Three Phase with 316 Stainless Steel Enclosure

480 Volt Primary, Load Center Interior, Interrupt Rating 18 kAIR, NEMA Type 3R

kVA	Part Number	Primary Main	Secondary Main	Feeder Circuit Breakers			Enclosure	Wiring Diagram
				Maximum Number		Maximum Ampere Rating		
				1 pole	3 pole			
15	MPZ15T2FSS	FAL34040	QO360	24	8	40	C	ii
22.5	MPZ22T2FSS	FAL34070	QO380	24	8	60	C	ii
30	MPZ30T2FSS	FAL34090	QO3100	24	8	80	C	iii

480 Volt Primary, NQ Panelboard Interior, Interrupt Rating 18 kAIR, NEMA Type 3R

kVA	Part Number	Primary Main	Secondary Main	Feeder Circuit Breakers			Enclosure	Wiring Diagram
				Maximum Number		Maximum Ampere Rating		
				1 pole	3 pole			
15	MPZB15T2FSS	FAL34040	QOB360	24	8	40	CC	ii
22.5	MPZB22T2FSS	FAL34070	QOB380	24	8	60	CC	ii
30	MPZB30T2FSS	FAL34090	QOB3100	24	8	80	CC	iii

Made-to-Order Units

- Secondary voltages are always:

  Single phase: 120/240
  Three phase: 208Y/120
- Primary voltage options are:
  - Single Phase
    600 Volts
    240 Volts
    208 Volts
  - Three Phase
    600 Volts
    240 Volts
    208 Volts
- Transformer with electrostatic shielding
- Temperature rise 80°C on transformer
  - 5 to 15 kVA, single phase (not available on 25 kVA)
  - 15 to 22.5 kVA, three phase (not available on 30 kVA)
- Primary circuit breaker options
  - Shunt trip, 120 Volts
- Other packaged products available
  - Transformer combo available as floor mounted switchboards: 15 to 225 kVA; see the current edition of the Schneider Electric Digest

© 2009 Schneider Electric
All Rights Reserved

Enclosure Drawings

Single Phase—Enclosure A

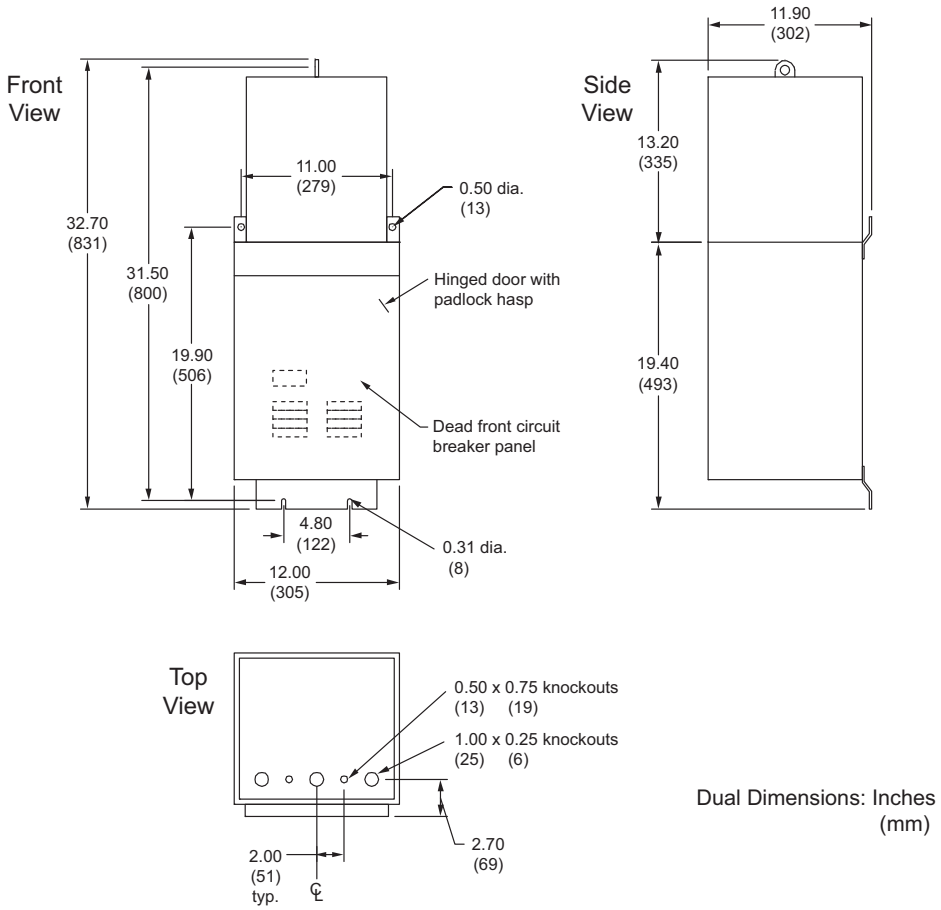

Replacement Parts

Item	Catalog Number
Box	39002-350-50
Dead front	39002-360-01
Hinged cover	39002-351-01
Back plate	39002-353-01
Ground bar	PK18GTA

© 2009 Schneider Electric
All Rights Reserved

Single Phase—Enclosure B

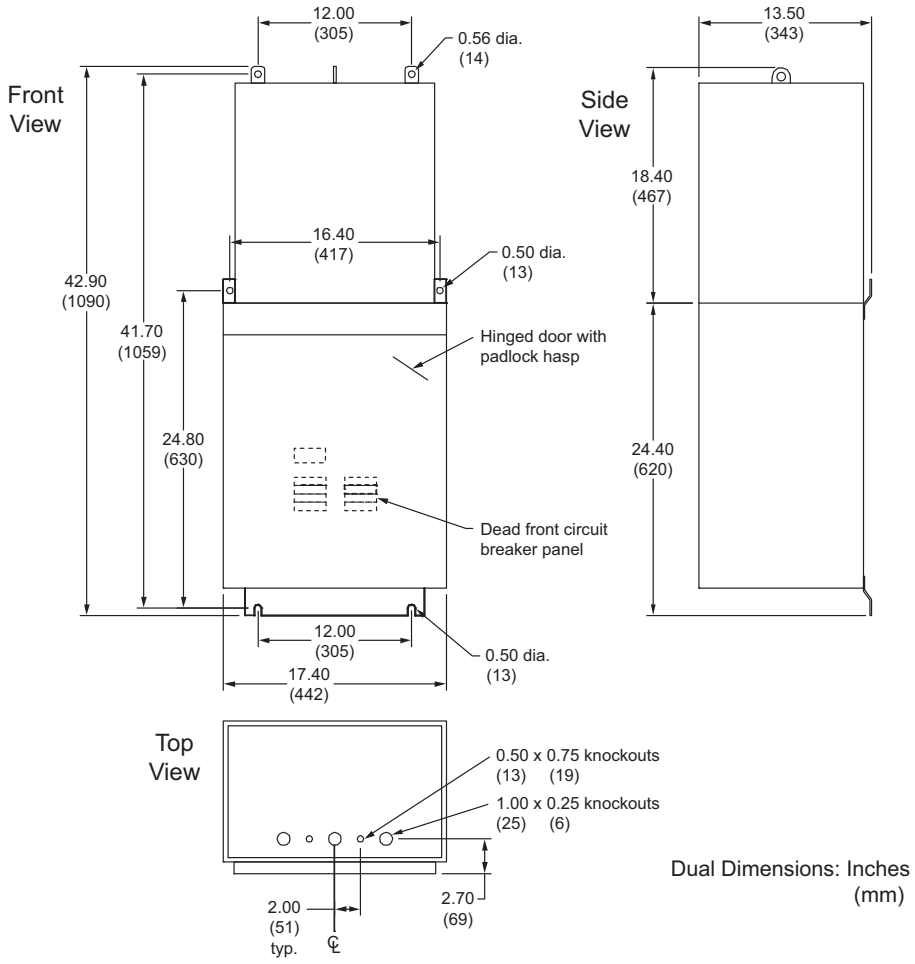

Replacement Parts

Item	Catalog Number
Box	39002-366-50
Dead front	39002-387-01
Hinged cover	39002-368-01
Back plate	39002-369-01
Ground bar	PK18GTA
Neutral assembly	SN-38

© 2009 Schneider Electric
All Rights Reserved

Three Phase—Enclosure C

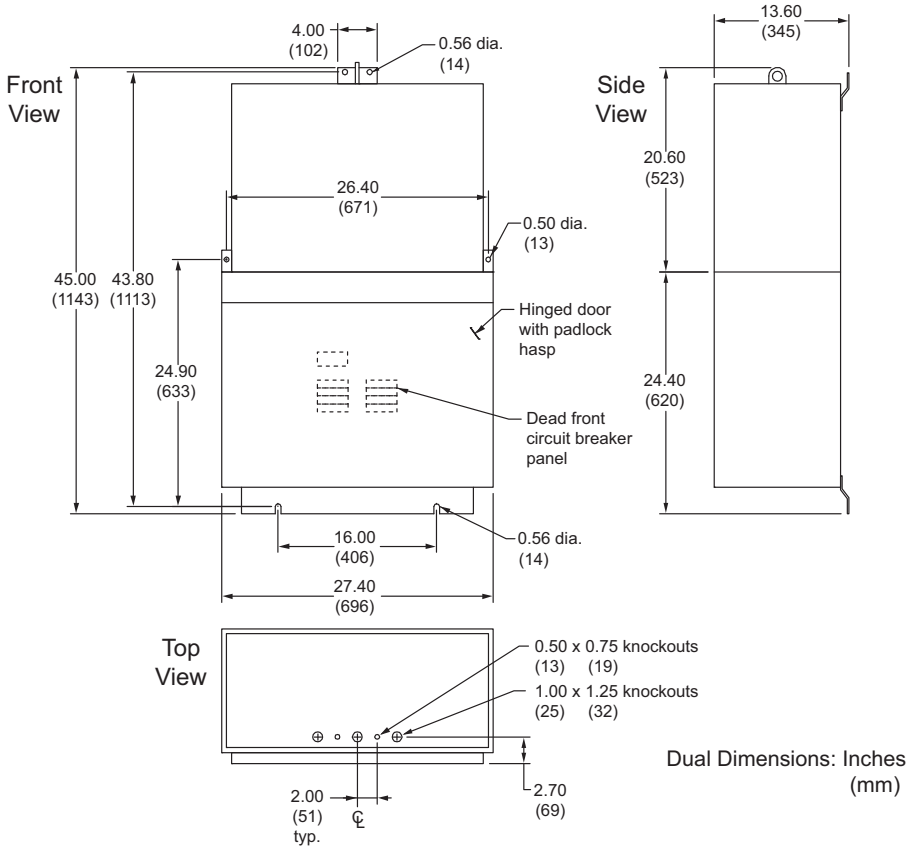

Replacement Parts

Item	Catalog Number
Box	39002-400-50
Dead front	39007-023-01
Hinged cover	39002-388-01
Back plate	39002-389-01
Ground bar	PK18GTA
Neutral assembly	SN-38

© 2009 Schneider Electric
All Rights Reserved

Single Phase—Enclosure AA

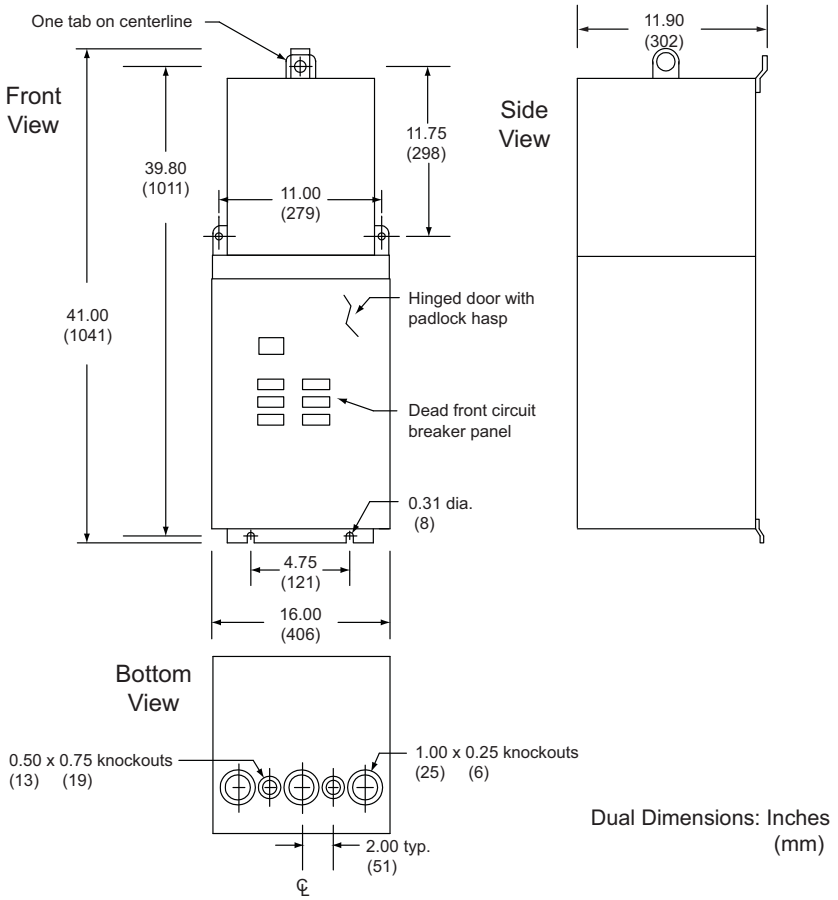

Replacement Parts

Item	Catalog Number
Box	39002-412-50
Dead front	39002-412-07
Hinged cover	39002-412-08
Back plate	39002-419-01
Ground bar	PK18GTA
Neutral assembly	SN-38

© 2009 Schneider Electric
All Rights Reserved

Single Phase—Enclosure BB

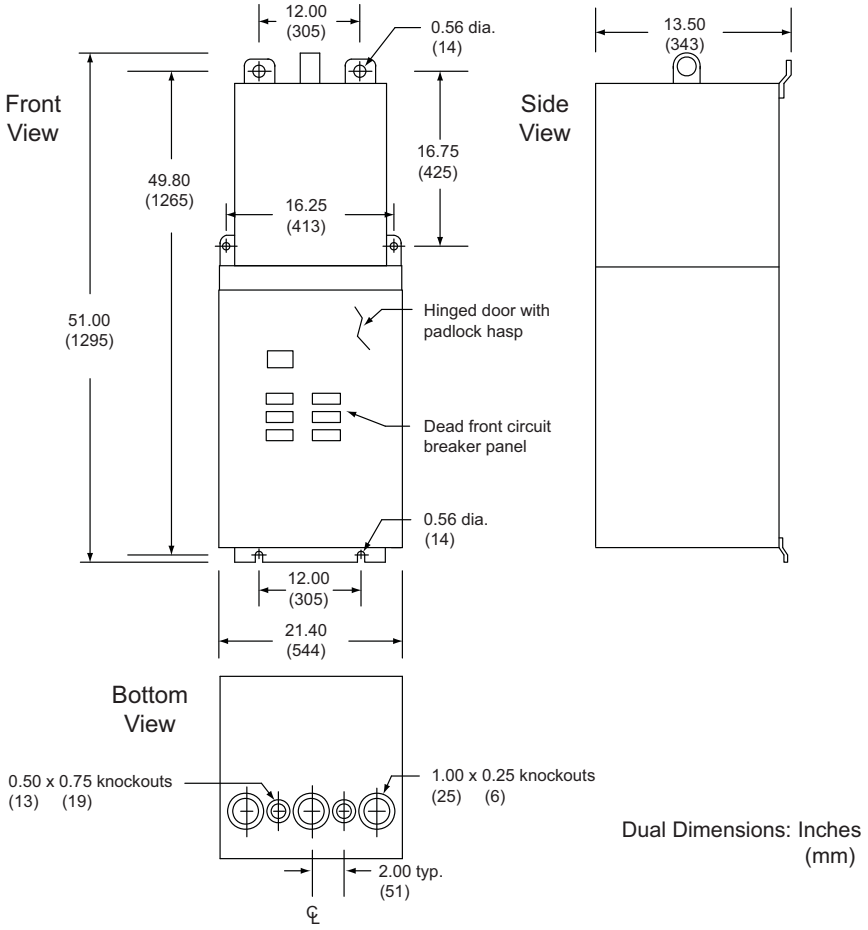

Replacement Parts

Item	Catalog Number
Box and back plate	39002-431-50
Dead front	39002-431-05
Hinged cover	39002-431-06
Ground bar	PK18GTA
Neutral assembly	SN-38

© 2009 Schneider Electric
All Rights Reserved

Three Phase—Enclosure CC

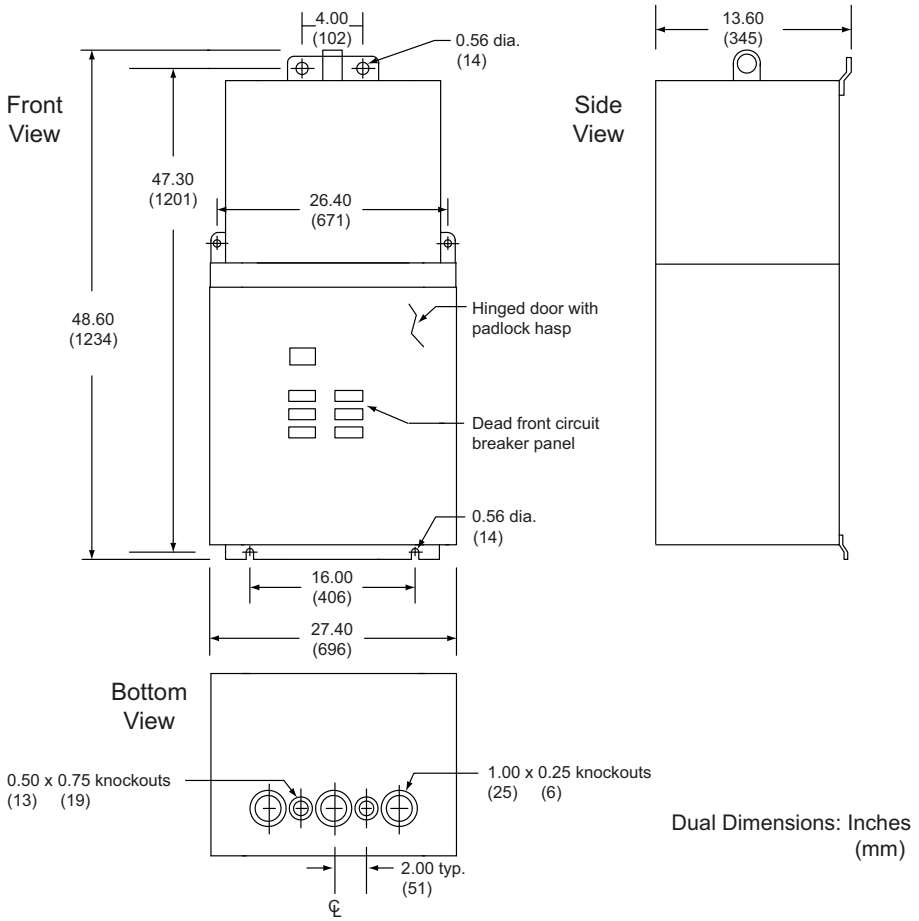

Replacement Parts

Item	Catalog Number
Box and back plate	39007-189-50
Dead front	39007-186-02
Hinged cover	39002-416-01
Ground bar	PK18GTA
Neutral assembly	SN-38

© 2009 Schneider Electric
All Rights Reserved

Wiring Diagrams

Single Phase

Diagram i

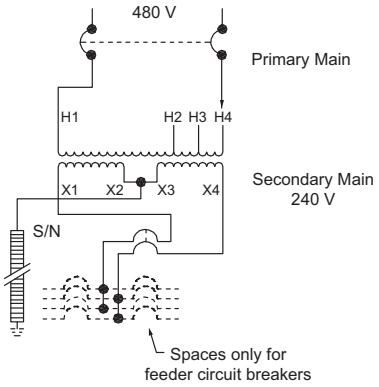

Three Phase

Diagram ii

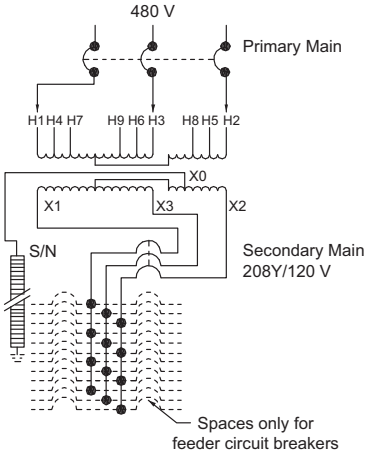

Diagram iii

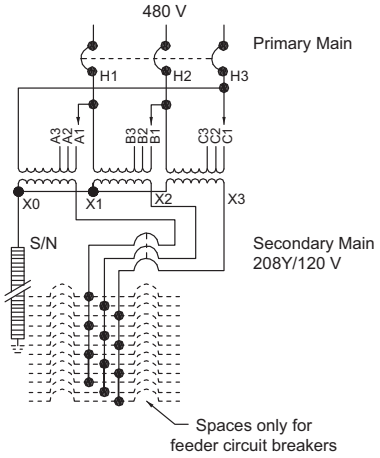

© 2009 Schneider Electric
All Rights Reserved

Additional Information

Designed for Ease of Installation

The Mini Power-Zone Unit Substation has a unique two-part construction that provides installation flexibility. This two-part construction uses removable transformers, available from factory stock, which can be replaced without disturbing external panelboard wiring. The transformer and panelboard can be mounted one part at a time if there is a space or handling problem.

The panelboard can be removed and wired first, if desired. The transformer simply mounts on top of the panelboard, and the primary and secondary leads are re-connected to the main circuit breakers.

All sizes are carried in Schneider Electric warehouse system stock. Each comes complete with the transformer and the main primary and secondary circuit breakers, all sized in accordance with NEC requirements. Branch circuit breakers are supplied separately.

Replacement Transformers and Interiors
Does not include backfeed secondary main circuit breaker

Phase	kVA	Catalog Number		
		Transformer	Interior	
			Load Center	Panelboard
1	5	MPT5S40F	QON30CCI	NQM18L1C
	7.5	MPT7S40F		
	10	MPT10S40F		
	15	MPT15S40F		NQM30L2C
	25	MPT25S40F		
3	15	MPT15T2F	QON330L200	NQM430L1C
	22.5	MPT22T2F		
	30	MPT30T2F		

Special Applications

Solar Photovoltaic Systems

- NEC 690.64 Point of Connection

  The output of a photovoltaic (PV) utility interactive inverter can be connected to either the line or load side of the utility service, based on the system design and the requirements found in NEC 690.64. Mini Power-Zone units are ideal where voltage transformation is needed. The units include both primary and secondary overcurrent protective devices along with panelboard mounted devices for each inverter output.

  Particular attention must be paid for load side connections and the requirements of NEC 690.64(B). If the panelboard in the Mini Power-Zone unit contains overcurrent protective devices for both PV inverter sources and system branch circuits or feeders, the sum of the ampere ratings of devices supplying power to the panelboard cannot exceed 120% of its ratings to comply with 690.64(B)(2). In addition, consider 690.64(B)(7), where the sum of the ampere ratings of devices supplying power exceeds the panelboard rating the devices used to connect PV inverters must be located at the opposite end from the input feeder or main circuit location. Since the panelboard devices are backfed from the PV inverters, hold down brackets are required to comply with 690.64(B)(6). Contact your local Schneider Electric representative for specific application assistance on using Mini Power-Zone units in PV systems.

© 2009 Schneider Electric
All Rights Reserved

- NEC 690.9 (B) Power Transformers

  Must meet NEC 450.3 for overcurrent protection for primary protection.

  Since the Mini Power-Zone unit will be used in both directions, the main circuit breakers must both comply with the secondary overcurrent protection limit of 125% maximum. That being the case, the limits for the primary circuit breakers at 480 V are as shown in the following table.

kVA	Phase	480 V Current	125% Handle Rating
5	1	10.42	15 [1]
7.5	1	15.63	20 [1]
10	1	20.83	30 [1]
15	1	31.25	40
25	1	50.08	70
15	3	18.04	25
22.5	3	27.06	35
30	3	36.08	50

[1] The standard single phase 5, 7.5, and 10 kVA circuit breakers comply with NEC 690.9 (B). Others will have to be quoted as special orders to meet the requirement.

Product Specifications

Unit Substations

UL Listed per UL 1062 File E92978

Transformers

Specification Number: 26 20 00.16

Product Name: DRY TYPE RESIN ENCAPSULATED TRANSFORMERS

Primary Overcurrent Protection (Circuit Breaker)

Specification Number: 26 28 16.14

Product Name: MOLDED CASE CIRCUIT BREAKERS

Secondary Panelboard and Secondary Main

Specification Number: 26 24 19.05

Product Name: LIGHTING AND APPLIANCE BRANCH CIRCUIT LOAD CENTERS

or

Specification Number: 26 24 16.14

Product Name: LIGHTING AND APPLIANCE BRANCH CIRCUIT PANELBOARDS 240 VAC, 48 VDC MAXIMUM

© 2009 Schneider Electric
All Rights Reserved

Surge Voltage Protection Adapter for Mobile Phone and Radio Link Systems COAXTRAB

Stay on the air with COAXTRAB. For the connection of antennae in transceiver systems with F or N connectors, COAXTRAB offers ideal surge voltage protection. Thanks to the good impedance matching, high transmission capacities of frequencies up to 3 GHz are no problem.

As coarse protection, there is a replaceable gas-filled surge voltage arrester in the CN-UB-280DC... adapter housing. In the case of a fault the surge voltage arrester can be removed by unscrewing a screw in the housing and inserting the replacement CN-UB-G1 gas arrester.

The protective adapter can be mounted permanently, in the switch cabinet, for example, with the CN-UB assembly board.

Phoenix Contact GmbH & Co. KG • 32823 Blomberg, Germany
Phone +49 52 35 3-00 • Fax +49 52 35 3-4 12 00 • www.phoenixcontact.com

COAXTRAB CN-UB-280DC
with N-Connector

Technical data

		Type	Article no.	Pcs. Pkt.
COAXTRAB, as surge voltage protection for coaxial cables	N-Connector	**CN-UB-280DC-SB**[1])	**28 18 14 8**	**1**
	N-Connector	**CN-UB-280DC-BB**[1])	**28 18 85 0**	**1**
Reserve gas-filled surge arrester		**CN-UB-G1**	**28 18 20 3**	**10**
CN-UB assembly board		**CN-UB/MP**	**28 18 13 5**	**10**

Technical data

IEC category/VDE requirement class:		C2, C3, D1
Arrester rated voltage (highest constant volt.) U_C:		280 V DC
Nominal current I_N:		5 A/25 °C
Operating current I_C at U_C:		≤ 1 µA
Nominal discharge surge current I_n (8/20):		20 kA
Output voltage threshold at 1 kV/µs:	asym. (⏚)	≤ 700 V
Protection level U_p:	asym. (⏚)	≤ 700 V
Response time t_a:	asym. (⏚)	≤ 100 ns
Cut-off frequency f_g (3 dB) (typ.):	asym. in a 50 Ω system	> 3 GHz
Standing wave ratio (SWR) in a 50 Ω system:		≤ 1.1 bis 2.0 GHz
perm. HF power P_{max} at SWR= 1.1/∞ in a 50 Ω system:		700 W/200 W
Capacitance (typ.):	asym. (GND/⏚)	1.5 pF
Connection:		N-Connector 50 Ω
Temperature range:		– 25 °C bis + 80 °C
Protection type in acc. with IEC 529/ EN 60 529:		IP 55
Approvals:		UL
Based on test standards:		Draft IEC 61643-21:2000-09, E VDE 0845 T.3-1:1999-07

[1]) with 7/16 connectors on request

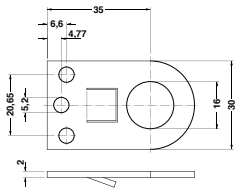

Dimensional drawing CN-UB assembly board

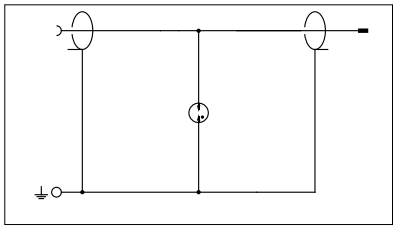

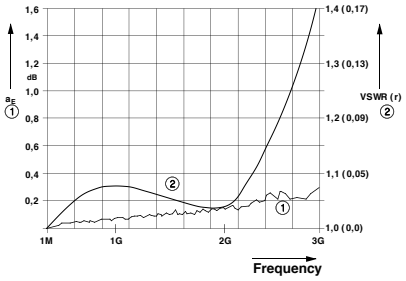

1 Typical attenuation curve CN-UB-280DC...
2 Typical VSWR on CN-UB-280DC...

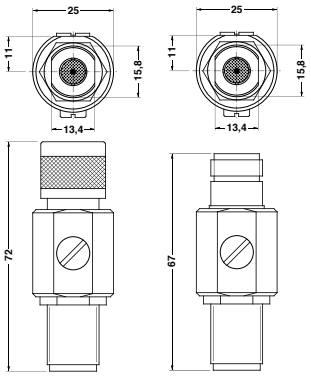

Dimensional drawing CN-UB 280 DC-SB and CN-UB 280 DC-BB

COAXTRAB CF-UB-280DC-SB-SET
with F-Connector

Technical data

		Type	Article no.	Pcs. Pkt.
COAXTRAB, as surge voltage protection for coaxial cables	N-Connector N-Connector	**CF-UB-280DC-SB-SET**	**28 39 54 1**	**1**
Reserve gas-filled surge arrester		**CN-UB-G1**	**28 18 20 3**	**10**
CN-UB assembly board		**CN-UB/MP**	**28 18 13 5**	**10**

Technical data

IEC category/VDE requirement class:		C2, C3, D1
Arrester rated voltage (highest constant volt.) U_C:		280 V DC
Operating current I_C at U_C:		≤ 1 µA
Nominal discharge surge current I_n (8/20):		10 kA
Output voltage threshold at 1 kV/µs:	asym. (⏚)	≤ 700 V
Protection level U_p:	asym. (⏚)	≤ 700 V
Response time t_a:	/asym. (⏚)	≤ 100 ns
Cut-off frequency f_g (3 dB) (typ.):	asym. in a 50 Ω system	> 2 GHz
Capacitance (typ.):	asym. (⏚)	1.5 pF
Connection:		F-Connector 75 Ω
Temperature range:		– 20 °C bis + 80 °C
Protection type in acc. with IEC 529/ EN 60 529		IP 55
Based on test standards:		Draft IEC 61643-21:2000-09, E VDE 0845 T.3-1:1999-07

[1]) with 7/16 connectors on request

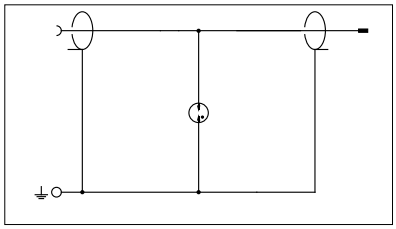

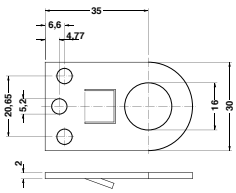

Dimensional drawing CN-UB assembly board

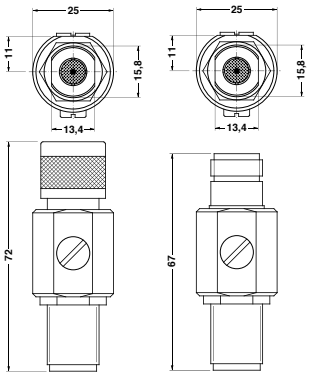

Dimensional drawing CN-UB 280 DC-SB and CN-UB 280 DC-BB

© PHOENIX CONTACT 15.12.00TNR: 5099935-00 http://www.phoenixcontact.com

Extract from the online catalog

RAD-CAB-LMR400-60

Order No.: 2867380

http://eshop.phoenixcontact.de/phoenix/treeViewClick.do?UID=2867380

Antenna extension cable, length: 60 ft

Commercial data	
GTIN (EAN)	4 017918 931759
Note	Made-to-order
sales group	H178
Pack	1 pcs.
Customs tariff	85442000
Catalog page information	Page 679 (IF-2011)

Product notes

WEEE/RoHS-compliant since: 07/01/2006

http://www.download.phoenixcontact.com Please note that the data given here has been taken from the online catalog. For comprehensive information and data, please refer to the user documentation. The General Terms and Conditions of Use apply to Internet downloads.

Technical data

General

Connection 1	Plug connector connection
Connection method	Type N (male)
Fixed cable length	18 m
Cable type	LMR-400
Cable, attenuation	0.13 dB/m

Minimum bending radius	25.00 mm
External diameter	10.00 mm
Outer sheath, material	PE
Connection name	Plug connector connection
Connection method	Type N (male)
Note	Both sides
Ambient temperature (operation)	-40 °C ... 85 °C

Address

PHOENIX CONTACT Deutschland GmbH
Flachsmarktstr. 8
32825 Blomberg,Germany
Phone +49 5235 3 12000
Fax +49 5235 3 41200
http://www.phoenixcontact.de

© 2011 Phoenix Contact
Technical modifications reserved;

Extract from the online catalog

RAD-CON-MCX90-N-SS

Order No.: 2885207

http://eshop.phoenixcontact.de/phoenix/treeViewClick.do?UID=2885207

Adapter cable, pigtail 120 cm 90° MCX(m) -> N(m)

Commercial data	
GTIN (EAN)	4 017918 986513
sales group	H178
Pack	1 pcs.
Customs tariff	85442000
Catalog page information	Page 679 (IF-2011)

Product notes

WEEE/RoHS-compliant since: 06/30/2006

http://www.download.phoenixcontact.com Please note that the data given here has been taken from the online catalog. For comprehensive information and data, please refer to the user documentation. The General Terms and Conditions of Use apply to Internet downloads.

Technical data

General

Connection 1	Plug connector connection
Connection method	Type 90° MCX (male)
Connection 2	Plug connector connection
Connection method	Type N (male)
Fixed cable length	1.2 m

Cable type	RG 316
Cable, attenuation	0.89 dB/m
Minimum bending radius	25.40 mm
External diameter	2.50 mm
Outer sheath, material	Fluorinated ethylene propylene (FEP)
Connection name	Plug connector connection
Connection method	Type 90° MCX (male)
Ambient temperature (operation)	-40 °C ... 75 °C

Address

PHOENIX CONTACT Deutschland GmbH
Flachsmarktstr. 8
32825 Blomberg,Germany
Phone +49 5235 3 12000
Fax +49 5235 3 41200
http://www.phoenixcontact.de

© 2011 Phoenix Contact
Technical modifications reserved;

Extract from the online catalog

RAD-ISM-900-ANT-OMNI-FG-6-N

Order No.: 2885579

http://eshop.phoenixcontact.de/phoenix/treeViewClick.do?UID=2885579

Omnidirectional antenna, IP65 protection, gain 8 dBi, connection N (female)

Commercial data	
GTIN (EAN)	4 046356 149471
Note	Made-to-order
sales group	H179
Pack	1 pcs.
Customs tariff	85177019
Catalog page information	Page 676 (IF-2011)

Product notes

WEEE/RoHS-compliant since: 06/30/2006

http://www.download.phoenixcontact.com Please note that the data given here has been taken from the online catalog. For comprehensive information and data, please refer to the user documentation. The General Terms and Conditions of Use apply to Internet downloads.

Technical data

General data

Frequency range	900 MHz
Horizontal beamwidth	360 °
Vertical beamwidth	15 °
Impedance	50 Ω
Gain	8 dBi

Connection method	N (female)
Degree of protection	IP65
Ambient temperature (operation)	-40 °C ... 80 °C
Width	6.05 cm
Height	180.34 cm

Address

PHOENIX CONTACT Deutschland GmbH
Flachsmarktstr. 8
32825 Blomberg,Germany
Phone +49 5235 3 12000
Fax +49 5235 3 41200
http://www.phoenixcontact.de

© 2011 Phoenix Contact
Technical modifications reserved;

Extract from the online catalog

RAD-CAB-RG213-40

Order No.: 2867377

http://eshop.phoenixcontact.de/phoenix/treeViewClick.do?UID=2867377

Antenna extension cable, length: 40 ft

Commercial data	
GTIN (EAN)	4 017918 931735
Note	Made-to-order
sales group	H178
Pack	1 pcs.
Customs tariff	85442000
Catalog page information	Page 679 (IF-2011)

Product notes

WEEE/RoHS-compliant since: 07/01/2006

http://www.download.phoenixcontact.com Please note that the data given here has been taken from the online catalog. For comprehensive information and data, please refer to the user documentation. The General Terms and Conditions of Use apply to Internet downloads.

Technical data

General

Connection 1	Plug connector connection
Connection method	Type N (male)
Fixed cable length	12 m
Cable type	RG-213U
Cable, attenuation	0.25 dB/m

Minimum bending radius	127.00 mm
External diameter	10.00 mm
Outer sheath, material	PE
Connection name	Plug connector connection
Connection method	Type N (male)
Note	Both sides
Ambient temperature (operation)	-40 °C ... 80 °C

Address

PHOENIX CONTACT Deutschland GmbH
Flachsmarktstr. 8
32825 Blomberg,Germany
Phone +49 5235 3 12000
Fax +49 5235 3 41200
http://www.phoenixcontact.de

© 2011 Phoenix Contact
Technical modifications reserved;

RAD-ISM-900-ANT-YAGI-6.5-N

6.5 dB Yagi for 900 MHz

INTERFACE

Data Sheet

© PHOENIX CONTACT - 2/2007

Antenna Specifications

Part No. 2867814

Bottom Operating Frequency	890 MHz
Top Operating Frequency	960 MHz
Nominal Gain	6.5 dBd
Horizontal Beamwidth (Deg-3dB)	100°
Vertical Beamwidth (Deg-3dB)	62°
Front to Back Ration	15 dB
Length	6.8 in. (172 mm)
Width	2.38 in. (60.5 mm)
Antenna Weight	1.3 lb. (590 g)
Rated Wind Velocity	125 mph (201 kph)
Connector	2 ft. (0.6 m) RG-213 with N-Type Female

2203B001

PHOENIX CONTACT • P.O. Box 4100 • Harrisburg, PA 17111-0100
Phone: 800-888-7388 • 717-944-1300 • Technical Service: 800-322-3225 • Fax: 717-944-1625 • E-mail: info@phoenixcon.com
Website: www.phoenixcon.com

RAD-ISM-900-ANT-YAGI-10-N

10 dB Yagi for 900 MHz

INTERFACE

Data Sheet

© PHOENIX CONTACT - 3/2007

Antenna Specifications

Part No. 5606614

Bottom Operating Frequency	890 MHz
Top Operating Frequency	960 MHz
Nominal Gain	10 dBd
Horizontal Beamwidth (Deg-3dB)	56°
Vertical Beamwidth (Deg-3dB)	46°
Front to Back Ration	20 dB
Length	6.8 in. (172 mm)
Width	2.38 in. (60.5 mm)
Antenna Weight	2.0 lb. (907 g)
Rated Wind Velocity	125 mph (201 kph)
Connector	2 ft. (0.6 m) RG-213 with N-Type Female

PHOENIX CONTACT • P.O. Box 4100 • Harrisburg, PA 17111-0100
Phone: 800-888-7388 • 717-944-1300 • Technical Service: 800-322-3225 • Fax: 717-944-1625 • E-mail: info@phoenixcon.com
Website: www.phoenixcon.com

SYNERGY ENVIRONMENTAL, LLC

TEMPERATURE SENSORS

SIEMENS

Technical Specification Sheet
Document No. 149-428
June 3, 2008

4-20 mA Room Temperature Sensors

Figure 1. Room Sensor.

Description

The 4-20 mA room temperature sensors provide input for accurate loop powered temperature sensing (detecting) via a 20 AWG twisted, shielded cable pair. The loop current varies according to the temperature being measured. Several models are available with different temperature ranges for sensing applications.

The room housing incorporates ventilation slits around the perimeter for accurate sensing of the controlled space. The Siemens logo is also featured on the front.

The sensor mounts either directly on drywall or on a 2 ×4 box with an accessory (see *Accessories Ordering Information*). No calibration or maintenance is required.

Specifications

Temperature mounting range	See Table 1.
Output signal	4-20mA
Elements	Platinum RTD
Accuracy	See Table 1.
Reference resistance at 32°F (0°C)	100 Ω

Table 1. Sensor Specifications.

Application	Temperature Range (Transmitter and Sensor Combined)	Element Package	Product Number
Room – Sensing only	40°F to 90°F/±0.7°F (4°C to 32°C/±0.3°C)	Series 1000 Room Housing	536-752*
	20°F to 120°F/±0.7°F (-7°C to 49°C/±0.3°C)		536-753*

* Add letter suffix to indicate desired color: A = Desert Beige; B = White: BN = White, No Logo

Accessories Ordering Information

Description	Product Part Number
Blank Bezel, 25-pack, (Beige)	544-482A
Blank Bezel, 25-pack, (White)	544-482B
Single Adapter Base Kit (Beige)	544-782A
Single Adapter Base Kit (White)	544-782B
Double Adapter Base Kit (Beige)	544-783A
Double Adapter Base Kit (White)	544-783B
Non-Conduit Rough-In Kit	544-784
Extender Ring Kit (Beige)	544-785A
Extender Ring Kit (White)	544-785B

Information in this document is based on specifications believed correct at the time of publication. The right is reserved to make changes as design improvements are introduced. Product or company names mentioned herein may be the trademarks of their respective owners. © 2008 Siemens Building Technologies, Inc.

SYNERGY ENVIRONMENTAL, LLC

SITE SECURITY

COOPER LIGHTING - LUMARK®

energy solutions

DESCRIPTION

The Lumark Tribute is the most versatile, functionally designed, universally adaptable outdoor luminaire available. The Tribute brings outstanding performance to walkways, parking lots, roadways, loading docks, building areas, and any security lighting application. U.L. listed and CSA certified for wet locations.

Catalog #	MPTR-SL-150-120-LL	Type
Project	RID - 95	SA
Comments	SSS POLE 15.5 W/ 2.5' BASE	Date
Prepared by		

SPECIFICATION FEATURES

Construction
Rugged one-piece die-cast aluminum housing and door frame. One-piece silicone gasket protects the optical chamber from performance degrading contaminants. One (1) stainless spring latch and two (2) stainless hinges allow toolless opening and removal of door frame.

Reflector
Choice of nine (9) high efficiency optical distributions, including five (5) segmented optical systems constructed of premium 95% reflective odized aluminum sheet. Optical segments are rigidly mounted inside a thick gauge aluminum housing for superior protection. All segment faces are clean of rivet heads, tabs or other means of attachment which may cause streaking in the light distribution. Optical modules are field rotatable in 90° increments and offered standard with mogul base lampholders for High Pressure Sodium and 200-400W Metal Halide assemblies or medium-base lampholders for Metal Halide 150W and below.

Electrical
Ballast and related electrical componentry are hard mounted to die-cast housing for optimal heat transfer and operating efficiency. Optional swing-down galvanized steel power tray with integral handle and quick disconnects allows tray to be completely removed from housing providing ample room for fixture installation and maintenance.

Mounting
Extruded 8" aluminum arm features internal bolt guides for easy positioning of fixture during installation to pole or wall surface.

Standard single carton packaging of housing, square pole arm and round pole adapter allow for consolidated product arrival to site. Optional internal mast arm mount accepts a 1 1/4" to 2 3/8" O.D. horizontal tenon, while a 4-bolt clamping mechanism secures fixture. Cast-in leveling guides provide +/-5° vertical leveling adjustment.

Finish
Housing and arm finished in a 5 stage premium TGIC bronze polyester powder coat paint. Optional colors include black, grey, white, dark platinum and graphite metallic. RAL and custom color matches available.

TR
TRIBUTE

70 - 400W
High Pressure Sodium
Pulse Start Metal Halide
Metal Halide

AREA LUMINAIRE

DARK SKY COMPLIANT FCO Full Cutoff

DIMENSIONS

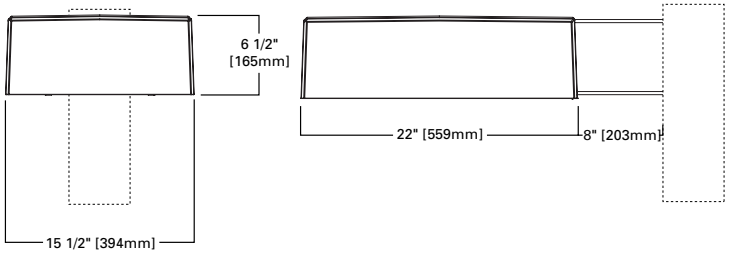

DRILLING PATTERNS

TYPE "M"

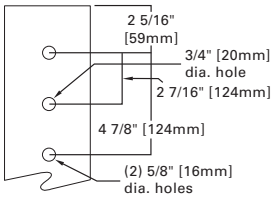

WALL MOUNT (MA1219-XX)

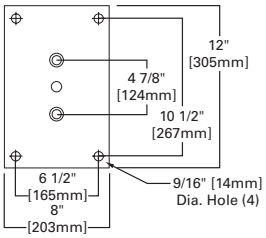

TRUNNION MOUNT

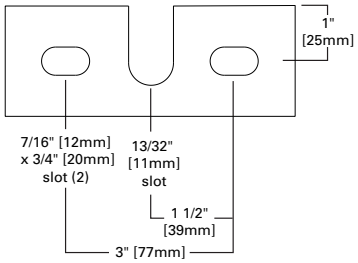

TECHNICAL DATA

UL Wet Locations Listed
CSA Certified
EISA Compliant Ⓔ

ENERGY DATA

Hi-Reactance Ballast Input Watts
70W HPS HPF (95 Watts)
100W HPS HPF (130 Watts)
150W HPS HPF (190 Watts)
150W MP HPF (185 Watts)

CWI Ballast Input Watts
250W HPS HPF (300 Watts)

CWA Ballast Input Watts
175W MH HPF (210 Watts)
200W MP HPF (227 Watts) Ⓔ
200W HPS HPF (250 Watts)
250W MH HPF (295 Watts)
250W MP HPF (283 Watts) Ⓔ
320W MP HPF (365 Watts) Ⓔ
350W MP HPF (397 Watts) Ⓔ
400W MP HPF (452 Watts) Ⓔ
400W MH HPF (455 Watts)
400W HPS HPF (465 Watts)

EPA
Effective Projected Area: (Sq. Ft.)
Without Arm: 1.19

SHIPPING DATA

Approximate Net Weight:
39 lbs. (17.73 kgs.)

ORDERING INFORMATION

Sample Number: MHTR-SL-400-MT-LL

Lamp Type
MP=Pulse Start Metal Halide
MH=Metal Halide
HP=High Pressure Sodium

Series [1]
TR= Tribute (Arm Included)

Distribution
2F=Type II Formed
2S=Type II Segmented
3F=Type III Formed
3S= Type III Segmented
4F= Type IV Formed
4S= Type IV Segmented
5F= Type V Formed
5S= Type V Segmented
SL= Spill Light Eliminator

Lamp Wattage [2]
MP
70=70W
100=100W
150=150W
200= 200W
250= 250W
320= 320W
350= 350W
400= 400W[3]
MH
175= 175W[4]
250= 250W[4]
400= 400W[3, 4]
HPS
70= 70W
100= 100W
150= 150W
250= 250W
400= 400W[3]

Voltage [5]
120V=120V
208V=208V
240V=240V
277V=277V
347V=347V[6]
480V=480V
DT=Dual-Tap
MT=Multi-Tap, wired 277V
TT=Triple-Tap, [6] wired 347V
5T=5 Tap Wired[5] 480V

Options
F1=Single Fuse (120, 277 or 347V[7] only)
F2=Double Fuse (208, 240 or 480V[7] only)
Q= Quartz Restrike (Hot Strike Only)[8]
EM= Quartz Restrike with "Delay Relay" (Quartz lamp strikes at both hot and cold starts)[8]
EM/SC= Emergency Separate[8] Circuit
LL= Lamp Included
S= 1 1/4" - 2 3/8" Internal Mast Arm Mount
TM= Trunnion Mount
PT= Electrical Power Tray
PER= NEMA Twistlock Photocontrol Receptacle
PC= Button Type Photocontrol[9]
HS= House Side Cutoff[10]
LA= Less Arm (Order Mounting Separately)

Accessories [11]
MA1201-XX=Direct Wall Mount Kit[1]
MA1218-XX=Direct Mount for Pole[1]
MA1219-XX=Wall Mounting Plate
OA1090-XX=Adjustable slipfitter Arm for Tenon Mount 2 3/8" O.D.[1]
MA1221-XX= External House Side Shield Kit (EPA= 0.38)
MA1222= Internal House Side Shield Kit for 2S/3S
MA1223= Internal House Side Shield Kit 4S
MA1224= Internal House Side Shield Kit for 2F/3F
MA1225= Internal House Side Shield Kit for 4F
MA1010-XX= SingleTenon Adapter for 3 1/2" O.D. Tenon
MA1011-XX= 2 @ 180 degrees Tenon Adapter for 3 1/2" O.D.Tenon
MA1012-XX= 3 @ 120 degrees Tenon Adaptor for 3 1/2" O.D. Tenon
MA1013-XX= 4 @ 90 degrees Tenon Adapter for 3 1/2" O.D. Tenon
MA1014-XX= 2 @ 90 degrees Tenon Adapter for 3 1/2" O.D. Tenon
MA1015-XX= 2 @ 120 degrees Tenon Adapter for 3 1/2" O.D. Tenon
MA1016-XX= 3 @ 90 degrees Tenon Adapter for 3 1/2" O.D. Tenon
MA1017-XX= Single Tenon Adapter for 2 3/8 " O.D. Tenon
MA1018-XX= 2 @ 180 degrees Tenon Adapter for 2 3/8" O.D. Tenon
MA1019-XX= 3 @ 120 degrees Tenon Adapter for 2 3/8" O.D. Tenon
MA1045-XX= 4 @ 90 degrees Tenon Adapter for 2 3/8" O.D. Tenon
MA1048-XX=2 @ 90 degrees Tenon Adapter for 2 3/8" O.D.Tenon
MA1049-XX=3 @ 90 degrees Tenon Adapter for 2 3/8" O.D. Tenon
OA/RA1013=Shorting Cap
OA/RA1016=Photoelectric Control 105-285V NEMA Type
OA/RA1027=Photoelectric Control 480V NEMA Type
OA/RA1201=Photoelectric Control 347V NEMA Type
TR/VS=Field Installed Vandal Shield[12]

Notes: 1 8 Inch Arm and pole adapter included with fixture. Specify Less Arm "LA" option when mounting accessory is ordered separately. 2 150W and below in Metal Halide are medium base sockets. All other wattages are mogul base. 3 Requires reduced envelope lamp. 4 175W, 250W, and 400W MH available in non-U.S. markets only. 5 Products also available in non-US voltages and 50HZ for international markets. Consult your Cooper Representative for availabiltiy and ordering information. 5T only available in 400W MH. 6 88% efficient EISA Compliant MP fixtures not available in 347V or TT Voltages. 7 Must specify voltage. 8 Quartz options not available with SL optics. 9 PC not available in 480V. 10 House side shield not available on 5S, 5F, or SL optics. 11 Order separately/replace XX with color specification. 12 Not available with SLE or House Side Sheild.

STOCK SAMPLE NUMBER (Lamp Included)

SAMPLE NUMBER: MPTR2340

MP | **TR** | **23** | ( )

Lamp Type
MP=Pulse Start Metal Halide
HP=High Pressure Sodium [2]

Series [1]
TR=Tribute

Distribution
23=Type II/III Formed

Lamp Wattage
15=150W
25=250W
32=320W
40=400W

NOTES:
[1] Short logic fixtures are finished bronze include multi-tap ballast, lamp, arm and round pole adapter. Other options not available. Refer to standard ordering logic. [2] Available in 150, 250 and 400 Watt.
Refer to In Stock Guide for availability.

VOLTAGE CHART	
DT=Dual-Tap	120/277 (wired 277V)
MT=Multi-Tap	120/208/240/277 (wired 277V)
TT=Triple-Tap	120/277/347 (wired 347V)
5T=5-Tap	120/208/240/277/480 (wired 480V)

LAMP TYPE	WATTAGE
Pulse Start Metal Halide	70, 100, 150, 250, 320, 350, 400W
Metal Halide	175, 250, 400W
High Pressure Sodium	70, 100, 150, 250, 400W

PHOTOMETRICS [Complete IES files available at www.cooperlighting.com]

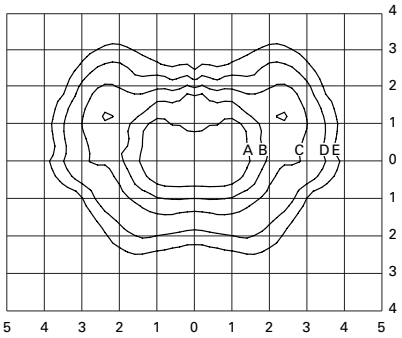

MPTR-3S-320
320—Watt MP
30,000—Lumen Clear Lamp
Type III Segmented

Footcandle Table
Select mounting height and read across for footcandle values of each isofootcandle line. Distance in units of mounting height.

Mounting Height	Footcandle Values for Isofootcandle Lines				
	A	B	C	D	E
20'	3.00	1.50	0.75	0.30	0.15
25'	**2.00**	**1.00**	**0.50**	**0.20**	**0.10**
30'	1.38	0.69	0.34	0.13	0.06

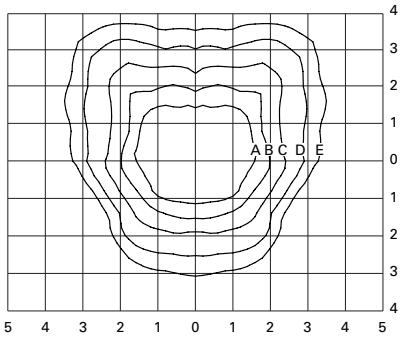

MPTR-4S-400
400—Watt MP
40,000—Lumen Clear Lamp
Type IV Segmented

Footcandle Table
Select mounting height and read across for footcandle values of each isofootcandle line. Distance in units of mounting height.

Mounting Height	Footcandle Values for Isofootcandle Lines				
	A	B	C	D	E
20'	3.00	1.50	0.75	0.30	0.15
25'	**2.00**	**1.00**	**0.50**	**0.20**	**0.10**
30'	1.38	0.69	0.34	0.13	0.06

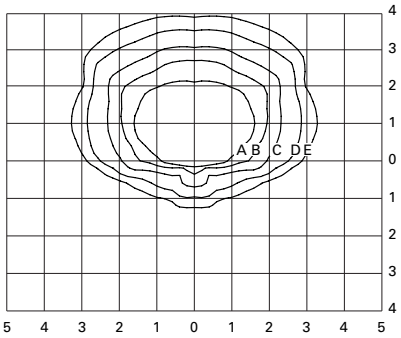

MPTR-SL-400
400—Watt MP
40,000—Lumen Clear Lamp
Spill Light Eliminator

Footcandle Table
Select mounting height and read across for footcandle values of each isofootcandle line. Distance in units of mounting height.

Mounting Height	Footcandle Values for Isofootcandle Lines				
	A	B	C	D	E
20'	3.00	1.50	0.75	0.30	0.15
25'	**2.00**	**1.00**	**0.50**	**0.20**	**0.10**
30'	1.38	0.69	0.34	0.13	0.06

MOUNTING CONFIGURATIONS

Wall Mount

Arm Mount Single
EPA: 1.62

Arm Mount 2 @ 180
EPA: 3.24

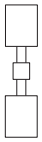

Arm Mount 2 @ 90
EPA: 3.24

Arm Mount 3 @ 120
(Round Pole Only)
EPA: 4.43

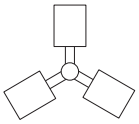

Arm Mount 3 @ 90
EPA: 4.43

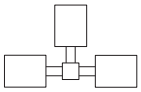

Arm Mount 4 @ 90
EPA: 5.03

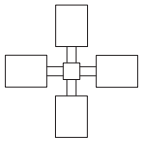

PTZ-3330-NC10

Outdoor – Pan Tilt Zoom - IP Camera

IV&C
Industrial Video and Control

The PTZ-3330-NC10 is a quality, high-resolution color video camera, with an 18x motor-driven optical zoom. The pan, tilt and zoom functions can be controlled automatically and precisely from anywhere using the click-to-point, and preset view features in the IVC Relay Server. PTZ-3330-NC10 supports dual codecs and is able to deliver both MPEG4 and M-JPEG video. The PTZ camera is a high performance low-light camera that automatically switches to black and white and removes an IR cut filter to increase sensitivity in low light conditions. The camera is housed in a rugged, outdoor enclosure

The camera can accept one contact closure or TTL connect from an auxiliary security or process-monitoring devices, such as motion detectors or door alarms, to initiate automatic views and video recordings of intrusions.

The camera is ready for direct mounting and requires only a network connection. The network connection can be via the RJ-45 connector for a standard, Cat-5 copper network. The camera is powered via PoE.

Specifications

Imager	1/4" Sony ExView HAD CCD
Shutter	1 to 1/10,000 Seconds
Exposure	Auto
Min. Illumination	0.3 lux (Color) 0.005 lux (B/W)
White Balance	Auto
Iris	Auto
Gain	Auto
Focus	Auto
Zoom Ratio	18x Optical; 4x Digital
View Angle	2.7° - 48°
Focal Length	4.1 – 73.8 mm
F-number	1.4
Pan Angle	±170°
Pan Speed	Max. 100°per Second
Tilt Angle	-30° to +90°
Tilt Speed	Max. 90°per Second
Ethernet	Wireless 802.11g
I/O Terminals	1 input, 1 output
Resolution	704x480, 352x240
Compression	M-JPEG, MPEG4
Frame Rate	30 FPS (MJPEG); 30/21 FPS (MPEG4)
Protocols	TCP/IP, HTTP, FTP, SMTP
Oper. Temp.	32° - 114°C
Weight	14 lbs
Dimensions	14"H x 11"D (Camera Enclosure) 15"L x 5.5"H x 4"W (Mounting Arm)
Power Req.	12VDC via PoE
Power Cons.	15W

PTZ-3330-NC10 -24 VDC
Installation Guide

1 Check Receipt of All Components

Before you proceed, make sure you have received all of the components listed below:

1. Camera with Lens (including)
    a. PTZ IP Camera Dome
    b. Sun Shield and Arm already assembled and attached to the dome
    c. Lens. This is the transparent lower half of the dome.
2. Allen Wrench
3. Bench Test Kit (including)
    a. Cross-Over cable

Note: Only one Bench Test Kit is enclosed per order, it may be in a separate box

4. Any special mounting equipment (e.g. IVC Pole Mount Kit).

Note: Special mounting equipment may be in a separate box and may require additional materials for installation (Consult the specific kit for more information.).

In addition to the package contents you will also require:

- A flathead screwdriver
- A Windows™ computer running the Relay Server Software
- A Windows™ computer running Internet Explorer 6.x (or higher)
- Rain-X™ (optional, available from any hardware store)
- Tools for Special Mounting Kit (e.g. IVC Pole Mount Kit). (See kit for details)

2 Setup and Bench Test Camera

2.1 REMOVE PACKAGING AND INSPECT CAMERA

To ensure the integrity of the camera during shipping certain packing materials are placed inside the camera to protect the lens and electronics. To remove these:

1. Loosen the thumbscrews on either side of the dome.
2. Loosen the hex screw in between the two thumbscrews using the included Allen wrench.
3. Carefully remove the dome.
4. Remove the plastic wrap covering the camera lens.
5. We recommend that you apply Rain-X™ to the outer lens as directed by the instructions in the Rain-X™ container. Rain-X™ can be obtained at any hardware store.
6. Replace the dome and tighten the thumbscrews.
7. The dome lens is constructed of soft acrylic for optimal optical characteristics. It can be scratched easily. Use only a damp soft cloth or vigorous water spray to clean.

If any damage occurred during shipping please call our support line (617-467-3059) for assistance.

2.2 CONNECT THE CAMERA

This camera requires 24V DC to operate. To begin:

1. Locate the open Network connection. (see picture below)
2. Connect one end of the included Crossover cable to the open Ethernet port of the camera.

Note: If you are connecting the camera to a network switch or hub, use a straight-through network cable.

3. Connect the other end of the Crossover cable to your computer.
4. Connect the leads on the 24 VDC power cable to the camera. (see picture below)

Note: To connect the leads, insert the small screw driver in the upper “D” shaped hole and place the lead into the lower circular hole.

5. The camera should undergo a self-test. (i.e. the camera head will pan and tilt)

CONNECTION DIAGRAM

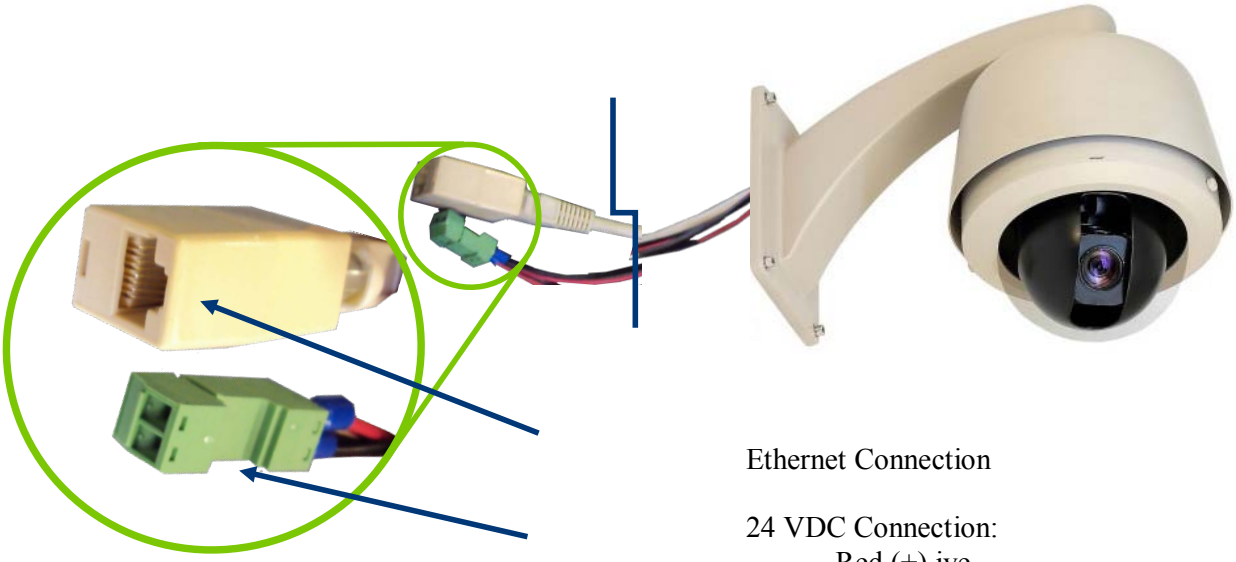

Ethernet Connection

24 VDC Connection:
Red (+) ive
Black (-) ive

2.3 SET THE CAMERA'S IP ADDRESS

For your convenience, the camera's default IP is printed on the information label attached to the camera box.

Fig. 2.3.1

The camera IP address has been set to one of ten addresses (192.168.0.99 through 192.168.0.108). For this section, the computer you are using for bench testing must be set to the same subnet as the camera (e.g. 192.168.0.###). Consult your network administrator if you need assistance. If you have difficulty locating the cameras IP address, the address can be determined by pinging each of the above addresses individually.

Once you have located the IP address please follow the instructions below to set it to a permanent address:

Note: For this section, the machine you are using for bench testing must be set to the same subnet as the camera (e.g. 192.168.0.###). Consult your network administrator if you need assistance.
Note: If you have lost the packaging materials for any reason, the address can be obtained by pinging each of the above addresses individually.
Note: If your system has been pre-configured do not change the IP address.

1. Type the camera's IP address into your browser's address bar and make sure you can see video.
2. Click **Configuration** on the left hand side at the bottom.
3. Now go to Network and enter the IP address the camera will be using. Optionally, you may also change the port setting and then his SAVE.

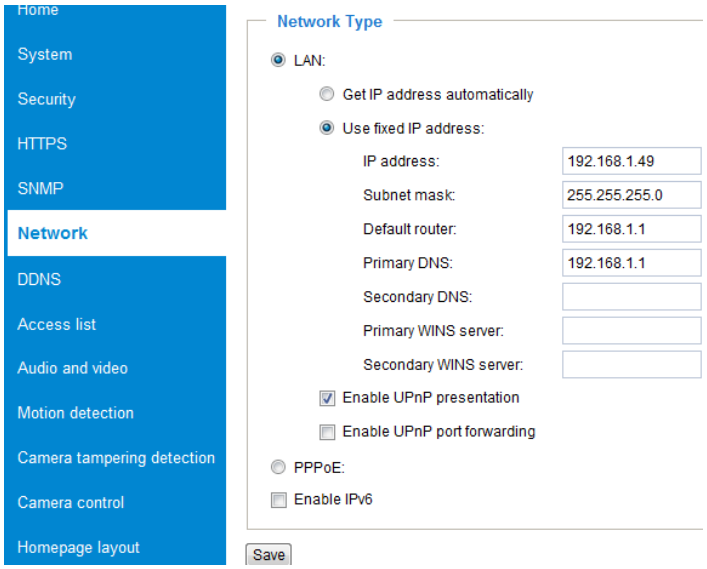

1) Camera will reboot. Wait for 10 seconds and then click **HOME**.

2.4 BENCH TEST COMPLETE

This concludes the bench test.

3 Mount and Connect Camera

3.1 MOUNT THE DOME

It is important to mount the dome to a solid, stable surface or pole. If the dome is to be bolted to a flat vertical surface, refer to the drill pattern (right). The arm underside has two ports for cable access. These will accommodate a ½ inch cable gland or NPT conduit fittings.

Note: If the dome is to be attached to a round pole 3'' to 15" in diameter, we suggest the IVC Pole Mount Kit. The Pole Mount Kit requires a steel band installation. A banding tool is required but not included. It is available from McMaster Carr (1-732-329-3200) and is listed as "Standard Banding Tool" Item No: "PN 5424K1."

3.2 CONNECT POWER

The power for each camera should be routed through a permanent and conveniently accessible power switch.

Note: In some circumstances, all IP cameras may require an occasional power interruption to reinitiate the camera software after installation.

As always, if you experience any problems please call us (617–467–3059). Our Technical Support staff is always happy to assist you.

Caution: All installations must insure the camera assembly is mounted securely to ensure that it cannot become dislodged during high wind, accidental bumping or other such incidents. All wiring must comply with NEC, NFPA, and local codes.

Note: IVC is not liable for direct or consequential damages resulting from use of this product and IVC makes no guarantees regarding results of intended and unintended use of the product.

All rights reserved to Industrial Video and Control, LLC, Newton, MA, 02460