APPENDIX C TABLE OF CONTENTS

FIGURES

Figure C-1 Site Location
Figure C-2 Maricopa County Materials Management Soil Gas Sampling Locations 17 – 19 June 1992
Figure C-3 Soil Sampling Locations 18 – 20 1993
Figure C-4 Site Plan Detail Area I
Figure C-5 Site Plan
Figure C-6 Cumulative Mass Recovery From Well VW-01

TABLES

Table C-1 Maricopa County Materials Management Well Information
Table C-2 Soil Vapor Extraction Information

LABORATORY REPORTS

Hydro Geo Chem, Inc. Soil Gas Analyses
Air Toxics LTD Soil Gas Analyses
Core Laboratories Inc. Gulf States Analytical Soil Gas Analyses
Analytical Technologies, Inc. Soil Sample Analyses
GTEL Environmental Laboratories Inc. Soil Sample Analyses

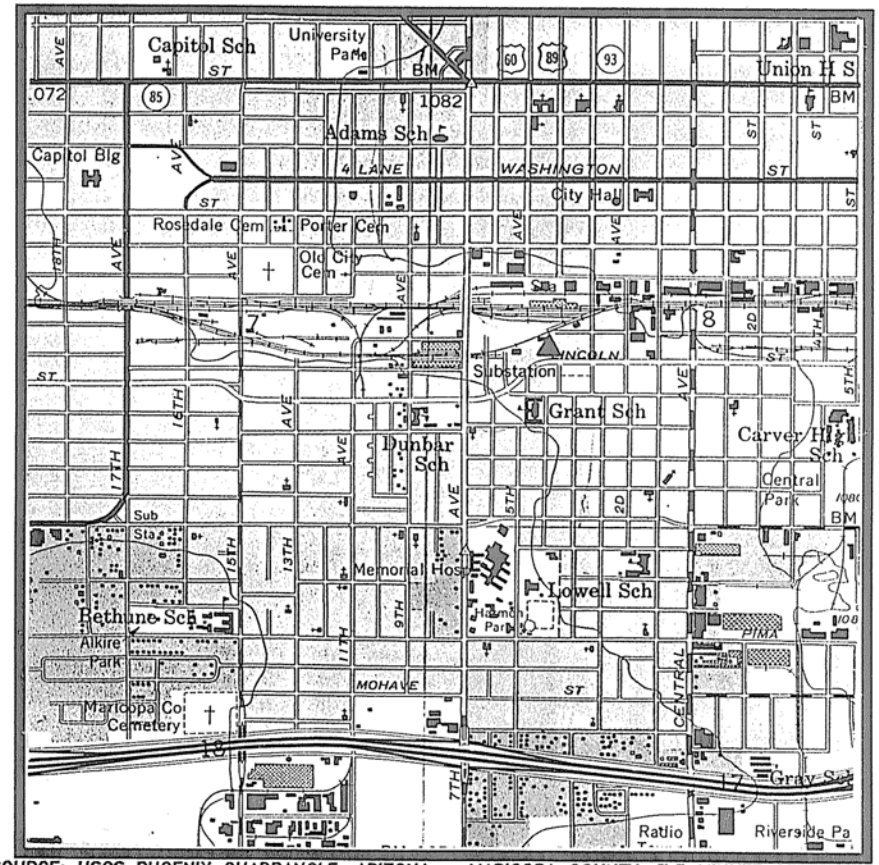

SOURCE: USGS PHOENIX QUADRANGLE, ARIZONA – MARICOPA COUNTY. 7.5 MINUTE SERIES, 1982

EXPLANATION

▲ SITE LOCATION

N

0 2000 4000

APPROX. SCALE IN FEET

MARICOPA COUNTY

320 WEST LINCOLN STREET
PHOENIX, ARIZONA
023300118

DRAWN BY: K. GREENE DATE: 06-25-96
DRAFTED BY: DEL HOLMES DATE: 06-27-96
CHECKED BY: DATE: 6/96

SITE LOCATION

Figure C-1

FLUOR DANIEL GTI
0118-SL

Figure C-1 Site location map of the 320 West Lincoln Street property in Phoenix, Arizona.

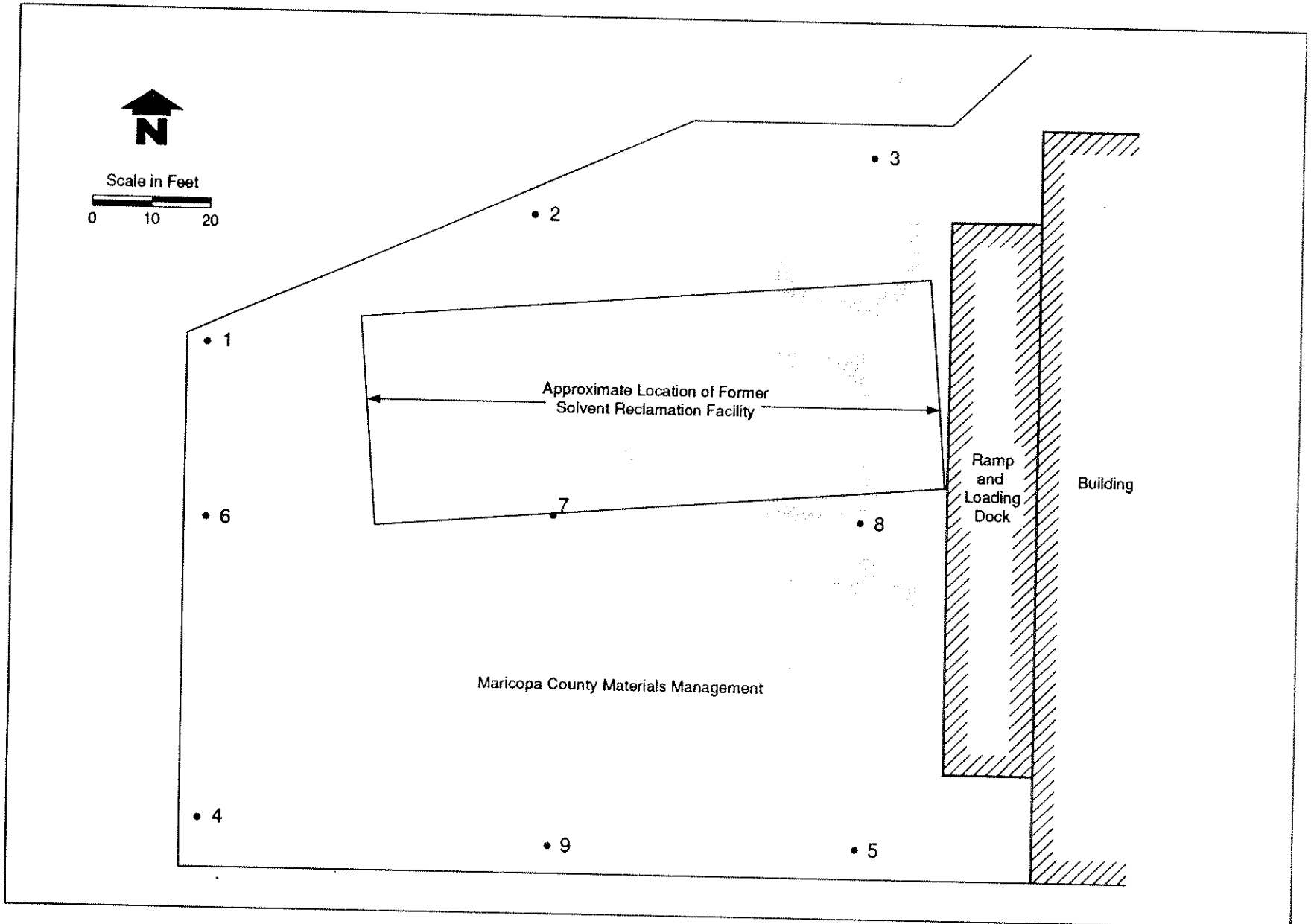

Figure C-2 Maricopa County Materials Management soil gas sampling locations 17-19 June 1992.

ADEQ.02/R1-7/23/92

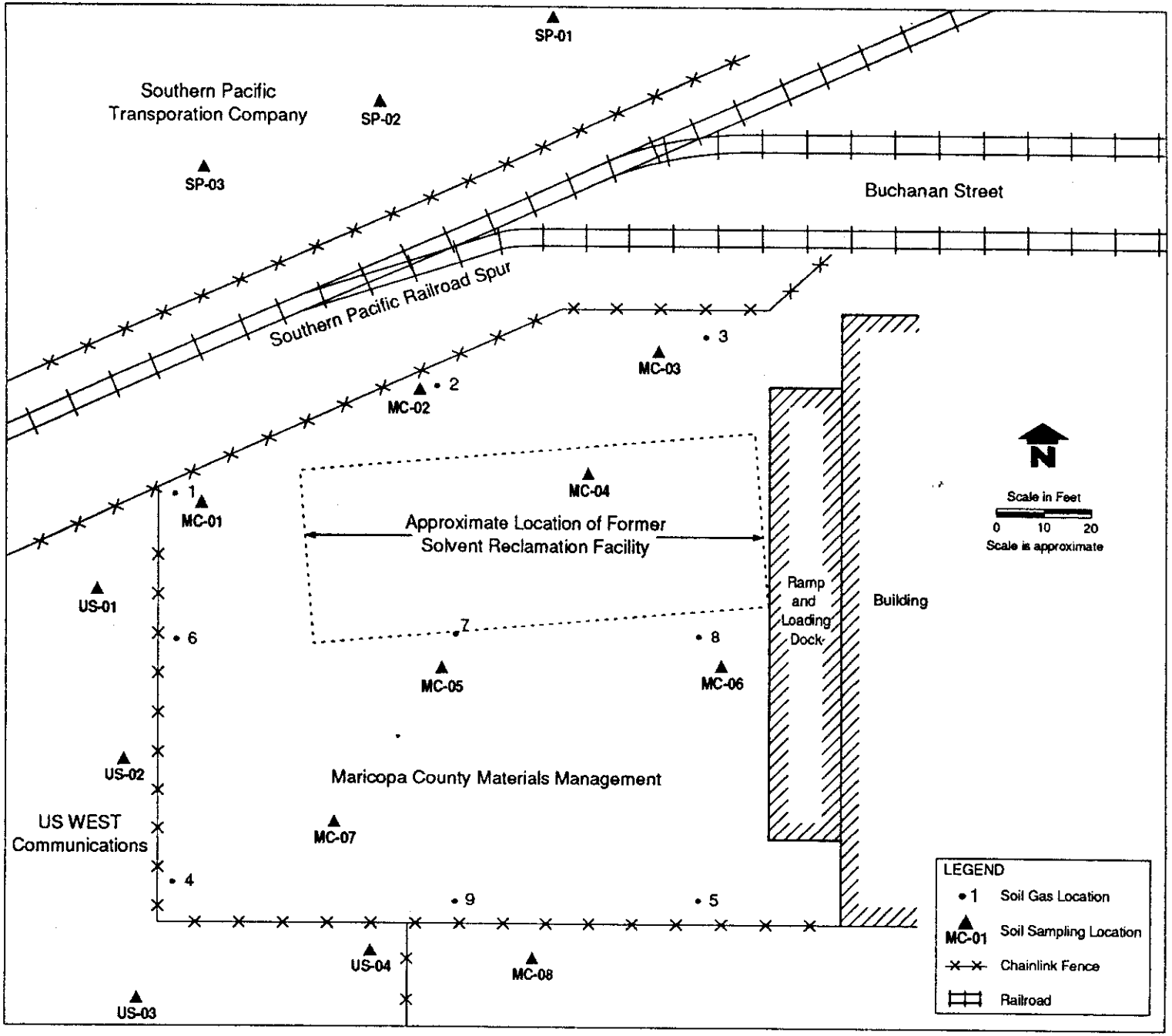

Figure C-3 Soil Sampling Locations, 18-20 February 1993.

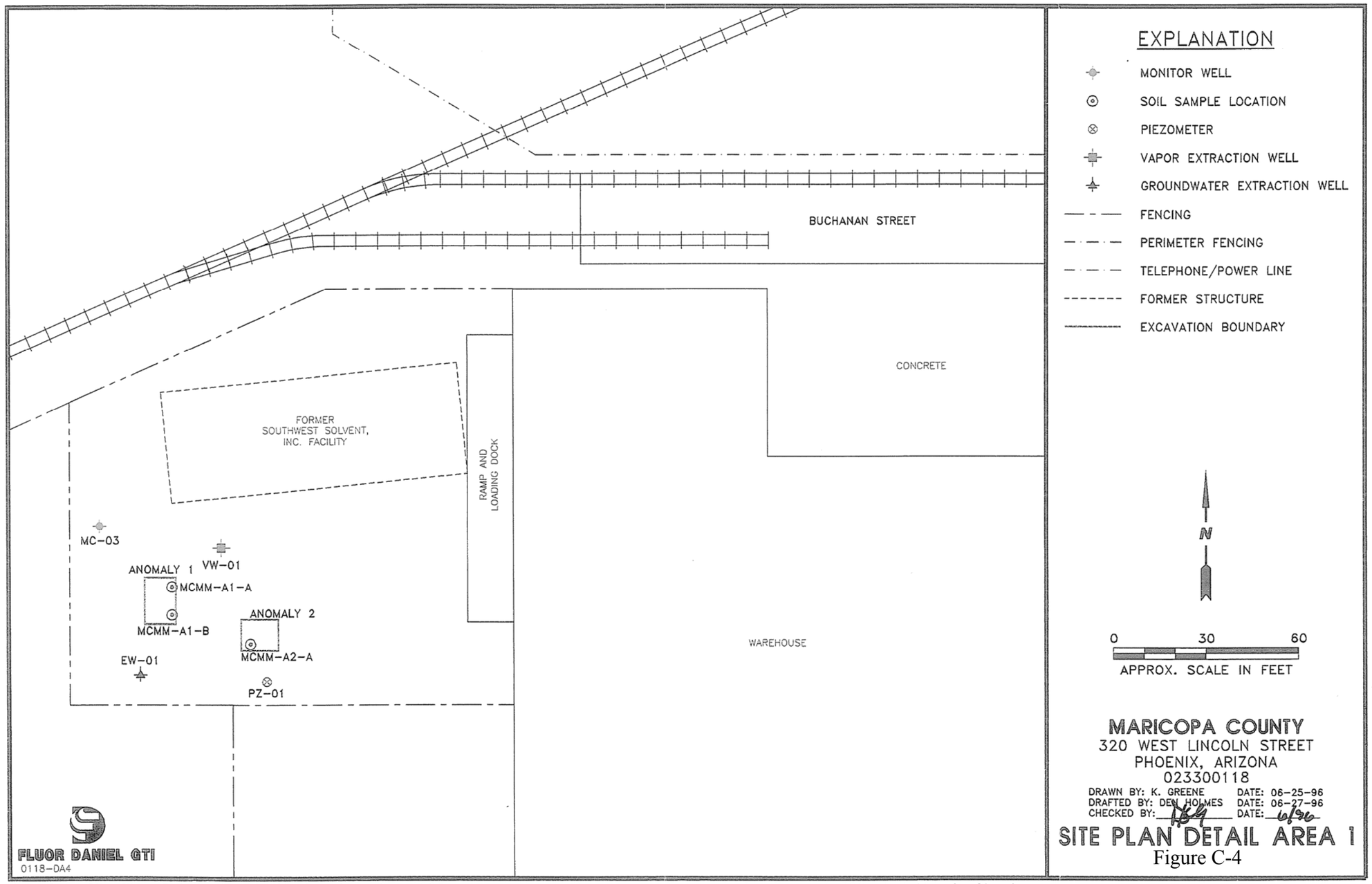

Figure C-4. Site Plan Detail Area 1 showing June 27, 1995 anomaly excavations and soil sample locations at 320 West Lincoln Street.

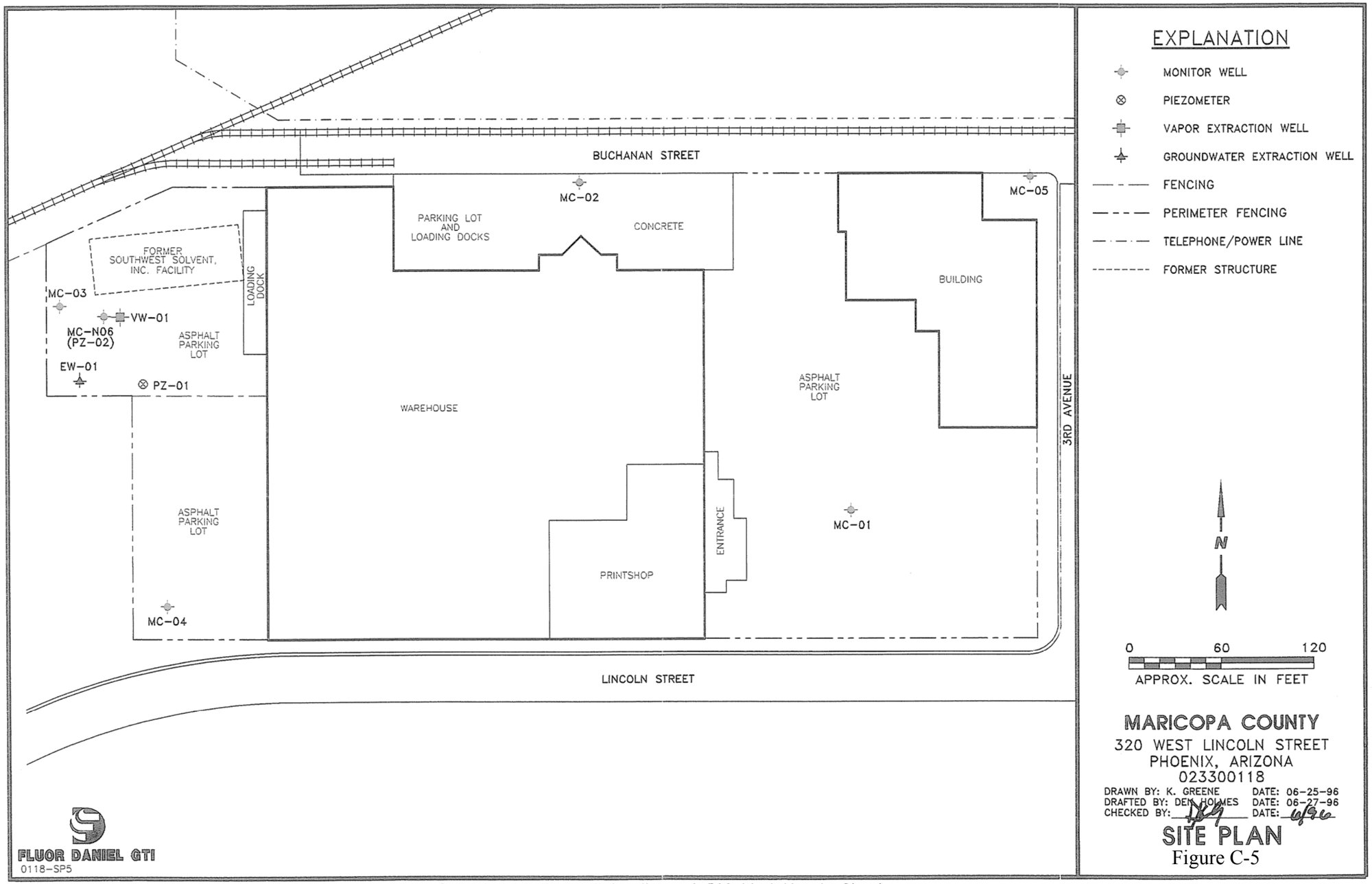

Figure C-5 Site plan showing monitor well, piezometer well, and extraction well locations at 320 West Lincoln Street.

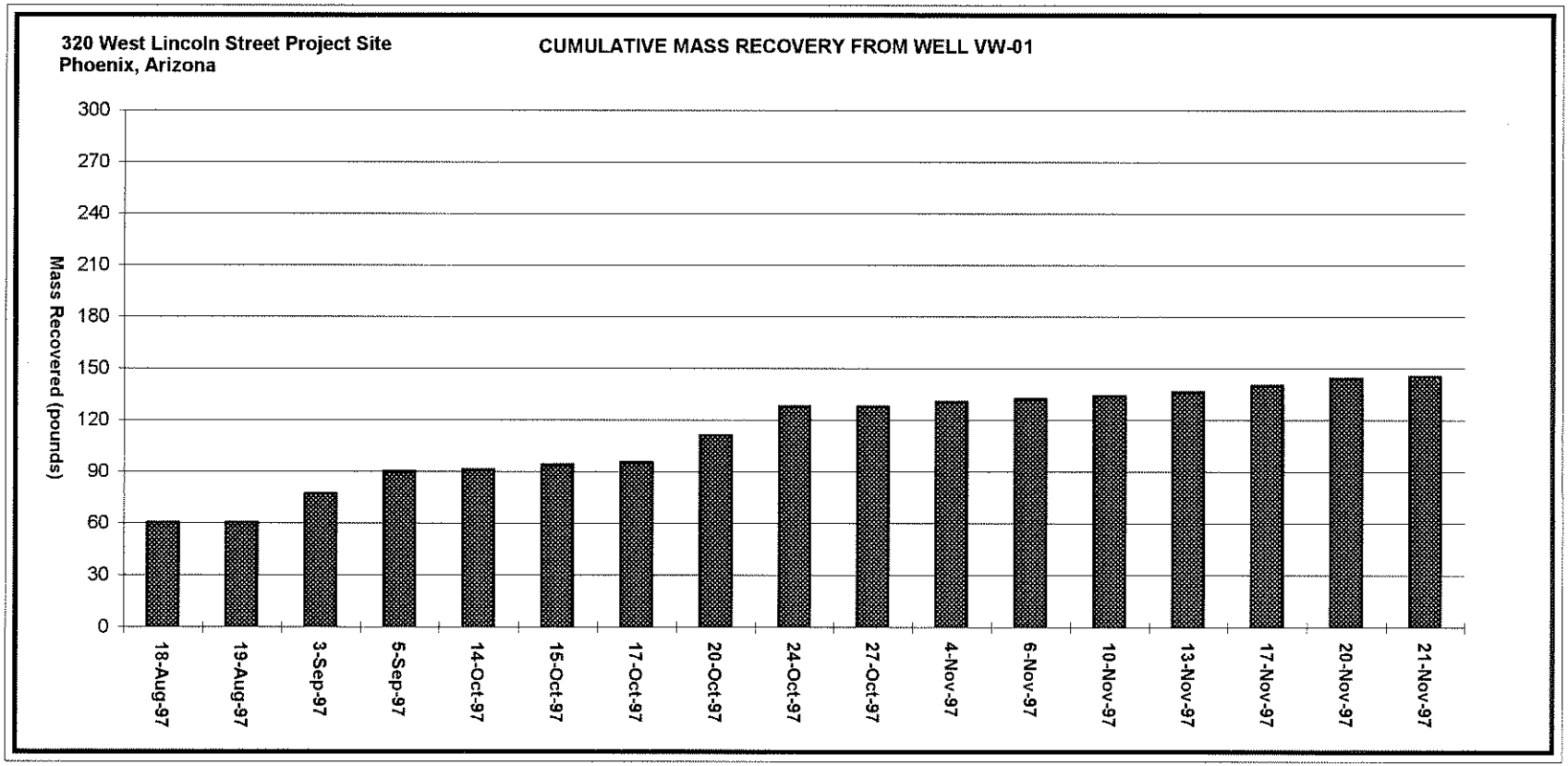

Figure C-6 Cumulative Mass Recovery From Well VW-01

Table C-1 Maricopa County Materials Management Well Information
West Van Buren WQARF Site

WVBA WELL ID	OWNER/FACILITY NAME	FACILITY WELL ID	ADWR #	TOTAL DEPTH (FT BTOC)	CASING DIAMETER (INCHES)	PERFORATED INTERVAL (FT BGS)	MEASURING POINT ELEVATION (FT AMSL)
AVB42-01	MARICOPA COUNTY	MC-01	55-538078	102	4	49-99	1,076.45
AVB42-02	MARICOPA COUNTY	MC-02	55-538077	102	4	49-99	1,076.99
AVB42-03	MARICOPA COUNTY	MC-03	55-538076	110	4	49-99	1,076.64
MC-04	MARICOPA COUNTY	MC-04	55-549618	102	4	52-102	1,075.19
AVB106-01	MARICOPA COUNTY	MC-05	55-549619	104	4	52-105	1,076.62
MC-N06 #1	MARICOPA COUNTY	MC-N06 #1	55-549233	140	2	135-140	1,077.03
AVB106-02	MARICOPA COUNTY	MC-N06 #2	55-549233	183	2	178-182	1,076.99
AVB106-03	MARICOPA COUNTY	MC-N06 #3	55-549233	215	2	210-215	1,076.33
EW-1	MARICOPA COUNTY	EW-1	55-549234	102	6	52-102	1,076.77
PZ-1	MARICOPA COUNTY	PZ-1	55-549232	102	2	52-102	1,076.45

Notes: FT BTOC - Feet Below Top Of Casing
FT BGS - Feet Below Ground Surface
FT AMSL - Feet Above Mean Sea Level

Table C-2 Soil Vapor Extraction Information

Well ID	Date	HVOC[1] (ppmv)	HVOC (ug/L)	Flowrate[2] (cfm)	Operation (hrs)	Total CF	Extraction (L)	Total ug	Mass (Kg)	Mass (lbs)	Cum. Mass (lbs)
VW-01 (Influent)	15-Aug-97	265	1653	224	--	--	--	--	--	--	---
VW-01 (Influent)	18-Aug-97	149	929	234	73	1024920	2943898	2.7E+9	27.36	60	60.19
VW-01 (Influent)	19-Aug-97	50	312	225	0.5	6750	19388	6.0E+6	0.06	0.13	60.32
VW-01 (Influent)	03-Sep-97	50	312	241	58.75	849525	2440108	760.9E+6	7.61	16.74	77.06
VW-01 (Influent)	05-Sep-97	50	312	223	49	655620	1883150	587.3E+6	5.87	12.92	89.98
VW-01 (Influent)	14-Oct-97	47	293	201	4	48240	138561	40.6E+6	0.41	0.89	90.87
VW-01 (Influent)	15-Oct-97	53	331	195	13	152100	436880	144.4E+6	1.44	3.18	94.05
VW-01 (Influent)	17-Oct-97	45	281	195	7	81900	235243	66.0E+6	0.66	1.45	95.50
VW-01 (Influent)	20-Oct-97	47	293	194	72	838080	2407234	705.7E+6	7.06	15.52	111.03
VW-01 (Influent)	24-Oct-97	37	231	193	99.8	1155684	3319494	766.0E+6	7.66	16.85	127.88
VW-01 (Influent)	27-Oct-97	25	156	192	0.3	3456	9927	1.5E+6	0.02	0.03	127.92
VW-01 (Influent)	04-Nov-97	10	62	88.5	131	695610	1998015	124.6E+6	1.25	2.74	130.66
VW-01 (Influent)	06-Nov-97	13	81	80	68	326400	937525	76.0E+6	0.76	1.67	132.33
VW-01 (Influent)	10-Nov-97	10	62	78	94	439920	1263591	78.8E+6	0.79	1.73	134.06
VW-01 (Influent)	13-Nov-97	8	50	174	75	783000	2249027	112.2E+6	1.12	2.47	136.53
VW-01 (Influent)	17-Nov-97	9	56	174	95	991800	2848767	159.9E+6	1.60	3.52	140.05
VW-01 (Influent)	20-Nov-97	14	87	173	74	768120	2206286	192.6E+6	1.93	4.24	144.29
VW-01 (Influent)	21-Nov-97	12	75	165	21	207900	597155	44.7E+6	0.45	0.98	145.27

HVOC[1] (ppmv) = Average soil vapor concentration during monitoring period based on field instrumentation
Flowrate[2] (cfm) = Average flowrate based on field instrumentation during monitoring period
-- = Data collected for monitoring purposes only

HYDRO GEO CHEM, INC.

Sample # AUB42-0740-1005 Date/Time 6-15-92 / 1455 Data Base File Weston/Phx
Location Description
Sampler's Signature [signature] Soil ___ Water ___ Soil Gas ✓
Weather: CLEAR Air Temp.(°F) 105 Soil Temp.(°F) ___
Wind Direction & Speed SW-10 Surface Conditions Asphalt
Cartridge # A= UN B= UP Sample Size (ml) A= 100 B= 50
Adapter # ___ Probe Depth 5 Probe Volume (ml) 900
Purge Rate FULL Purge Time 3 Minutes Purge Vacuum <2 "Hg
Sample Flow Rate 200 ml/min Sample Vacuum ("Hg) A= 6.0 B= ___
Notes
Lab Receipt: Signature M. Clark Date/Time 6/19/92 15:30

Compound	Concentration (µg/L) A 0.05L	B 0.05L (altered ranges)	Notes
Vinyl chloride	<0.01	poor elution-not used	
trans-1,2-dichloroethene	0.11		
1,1-dichloroethene	1.42		
1,1-dichloroethane	20.85		
cis-1,2-dichloroethene	0.74		
chloroform	9.58		
1,1,1-trichloroethane	137.82		
1,2-dichloroethane	<0.01		
trichloroethene	~~Hall out of range~~	Hall out-of range	>800 µg/L
1,1,2-trichloroethane	4.05	poor elution-not used	
tetrachloroethene	~~Hall out of range~~	Hall out of range	>1000 µg/L

WARNING - MEMORY AT 6. K - UNPROTECTED CHROMATOGRAMS WILL BE REPLACED

HECD

```
SAMPLE TABLE...
ANALYST (MC    ) AN="
INJECTIONS/SAMPLE [0-254] ( 1. ) RA=
SAMPLES BETWEEN CALIB [0-254] ( 100) CI=
CONC UNITS (uG/L ) CU="
SAM IX    NAME            SAM AMT      SCALE
SI= 1     SN=" AVB4207402005SA= 0.05 XF= 1
SI=
END OF DIALOG
/.A/
SAMPLE TABLE...
ANALYST (MC    ) AN="
INJECTIONS/SAMPLE [0-254] ( 1. ) RA=
SAMPLES BETWEEN CALIB [0-254] ( 100) CI=
CONC UNITS (uG/L ) CU="
SAM IX    NAME            SAM AMT      SCALE
SI= 1     SN=" AVB4274002005SA= 0.05  XF= 1
SI=
END OF DIALOG
```

See rerun @ altered range 6/19/92 19:02

AVB42-0744P-1005

CHANNEL A INJECT 06/19/92 18:28:51 STORED TO BIN # 96

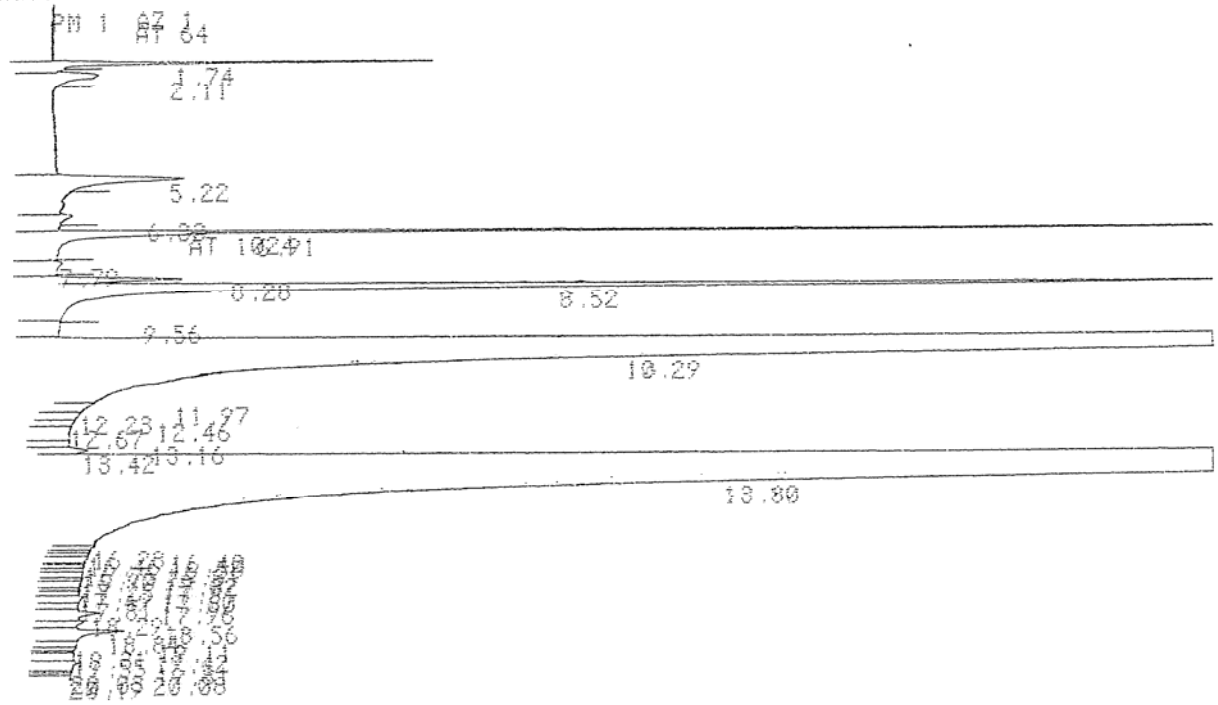

DATA SAVED TO BIN # 96

HECD/WESTON.PMX 06/19/92 18:28:51 CH= "A" PS= 1.

FILE 1. METHOD 5. RUN 99 INDEX 1 BIN 96

ANALYST: MC

SAMPLE 1 AVB4274020 BIN 96 NAME ARUN0096

FID
not used

UCL	28.904	2.36	99794 01	690526.496
TDCE	0.	3.94	155798 02	
3	0.	4.56	79881 02	
CDCE	69.817	4.68	177269 02	565101.266
CLCH3	37.584	5.07	52495 02	279344.333
TCA111	0.	5.3	25164 02	
DCA12	15.225	5.43	39620 03	520489.967
8	0.	6.	1009611 01	
TCE	7.755	6.84	16120 02	415726.603
10	0.	7.52	39259679 02	
11	0.	7.86	537184 02	
12	0.	8.13	792357 02	
TCA112	196.057	8.44	354331 02	361455.555
14	0.	8.66	194228 02	
15	0.	8.86	253699 02	
16	0.	9.06	560744 02	
17	0.	9.26	304240 02	
PCE	349.412	9.72	547044 02	313122.653
19	0.	11.2	69987432 02	
20	0.	11.37	163861 02	
21	0.	11.54	144338 02	
22	0.	11.72	232527 02	
23	0.	12.02	133725 02	
24	0.	12.26	56088 02	
25	0.	12.48	50861 02	
26	0.	12.66	95834 02	
27	0.	12.96	59488 02	
28	0.	13.12	146938 02	
29	0.	13.6	78922 02	
30	0.	13.73	51685 02	
31	0.	14.09	77275 02	
32	0.	14.29	25873 02	
33	0.	14.49	56105 02	
34	0.	14.66	96367 02	
35	0.	14.86	67215 02	
36	0.	15.14	40874 02	
37	0.	15.32	217563 02	
38	0.	15.56	212638 02	
39	0.	15.78	71776 02	
40	0.	15.94	82937 02	
41	0.	16.1	100090 02	
42	0.	16.34	97374 02	
43	0.	16.37	67914 02	
44	0.	16.61	189406 02	
45	0.	16.82	309649 02	
46	0.	17.05	216253 02	
47	0.	17.24	548069 02	
48	0.	17.49	760977 02	
49	0.	17.73	754138 02	
50	0.	18.12	107306 02	
51	0.	18.21	204609 02	
52	0.	18.56	251113 02	
53	0.	18.9	49962 02	
54	0.	19.17	12343 03	
TOTALS	704.754	120300000		

WARNING - MEMORY AT 0. K - UNPROTECTED CHROMATOGRAMS WILL BE REPLACED

VARIAN 3400 GAS CHROMATOGRAPH
METHOD 1 RUN 108
TIME 19:06 19 JUN 92
SAMPLE: 4207402005
RUN MODE: ANALYSIS
CALCULATION TYPE: EXTERNAL STANDARD

PEAK NO.	PEAK NAME	TIME MIN	RESULT UG/L	AREA COUNTS
1		9.104		170118
2		9.370		256069
3	TCE	10.103	301.1032	1093772
4		10.573		5007484
5		10.690		43923952
6		12.156		4236066
7		12.350		3524266
8		12.553		13390878
9		13.132		10305465
10	PCE	13.588	4023.0794	13929484
11		14.415		36523930
12		15.523		6879304
13		15.791		4910100
14		16.066		5483308
15		16.217		1381891
16		16.343		1388826
17		16.449		3652632
18		16.646		5864653
19		16.832		1408144
20		16.997		2886567
21		17.136		6828240
22		17.598		5970165
23		17.795		3605182
24		17.947		2662198
25		18.078		1741331
26		18.218		4612666
27		18.445		3890220
28		18.647		3055353
29		18.808		9149780
30		19.231		4661969
31		19.473		3671709
32		19.725		11813225
33		20.513		4105770
34		20.846		4025116
35		21.191		1247993
36		21.339		1425226
37		21.446		1861977
38		21.603		667873
39		21.713		4257813
40		22.135		1635836
41		22.281		1201493
42		22.380		1655906
43		22.538		944796
44		22.693		1237076
45		22.874		1564867
46		22.983		1003095
47		23.087		2066721
48		23.365		797061
49		23.388		381441
50		23.473		1126903
51		23.606		956125
52		23.793		1282939
53		23.915		1246524
54		24.073		1485939
55		24.220		425891
56		24.336		1488178
57		24.526		1170142
58		24.690		997109
59		24.800		1410649
60		25.020		1356744
61		25.273		1037740
62		25.380		568030
63		25.509		1151695
64		25.673		666513
65		25.753		902973
66		25.993		1049352
67		26.081		676523
68		26.206		671474
69		26.436		1160970
70		26.602		510164
71		26.713		564913
72		26.855		637942
73		26.974		894293
74		27.172		558380
75		27.250		243578
76		27.378		526373
77		27.473		585160
78		27.619		232266
79		27.717		593420
80		27.803		362825
81		27.953		404513
82		28.094		441307
83		28.233		431747
84		28.330		461855
85		28.500		514616
86		28.736		702226
87		28.913		250372
88		29.046		413516
89		29.212		238061
90		29.326		234103
91		29.393		257300
92		29.508		259993
93		29.765		416018
94		29.980		216644
95		30.215		260283
96		30.300		88789
97		30.438		113066
98		30.493		75190
99		30.889		218444
100		31.020		49672
101		31.260		30132
TOTALS:			4324.1826	290578633

DETECTED PEAKS: 101 REJECTED PEAKS: 0
AMOUNT STANDARD: 1.0000000
MULTIPLIER: 100.00000 DIVISOR: 0.0500000
NOISE: 148.8 OFFSET: -10

not used.

SA	IS	XF
0.05	0.	1.

HECD

AVB42-0740-1005

NAME	UG/L	RT	AREA	BC	RF
1	0.	1.74	136525	01	
2	0.	2.11	58205	01	
DCE11	1.416	5.22	144900	01	2046026.
TDCE	0.113	6.33	11050	01	1954828.
DCA11	20.845	6.91	2330492	01	2236083.
CDCE	0.736	7.79	76671	01	2083899.
CHCL3	~~X~~ 9.58	8.28	1438489	02	
TCA111.	137.817	8.52	10960428	08	2751535.
~~BCA12~~	0.001	9.56	137	05	1973730.
TCE	779.112	10.29	90831108	06	2331657.
11	0.	11.97	732775	06	
12	0.	12.23	437573	06	
13	0.	12.46	279523	06	
14	0.	12.67	359719	06	
15	0.	13.16	144910	06	
TCA112	4.045	13.42	372363	06	1041279.
PCE	993.762	13.8	139529443	06	2808106.
18	0.	16.28	310719	06	
19	0.	16.4	200538	06	
20	0.	16.46	188601	06	
21	0.	16.58	452967	06	
22	0.	16.76	76083	06	
23	0.	16.81	162400	06	
24	0.	16.9	162882	06	
25	0.	17.02	285483	06	
26	0.	17.25	240587	06	
27	0.	17.31	195362	06	
28	0.	17.49	195086	06	
29	0.	17.6	198741	06	
30	0.	17.81	290939	06	
31	0.	17.96	117339	06	
32	0.	18.29	659895	06	
33	0.	18.56	272174	06	
34	0.	18.84	849169	06	
35	0.	19.11	148969	06	
36	0.	19.31	71002	06	
37	0.	19.42	38589	06	
38	0.	19.55	82827	06	
39	0.	19.81	142244	06	
40	0.	20.03	9490	06	
41	0.	20.06	5724	06	
42	0.	20.19	6990	07	
TOTALS	1937.847		261204111		

wrong RT

WARNING - MEMORY AT 6. K - UNPROTECTED CHROMATOGRAMS WILL BE REPLACED

CHANNEL B INJECT 06/19/92 10:20:51 REPLAYED FROM BIN # 32

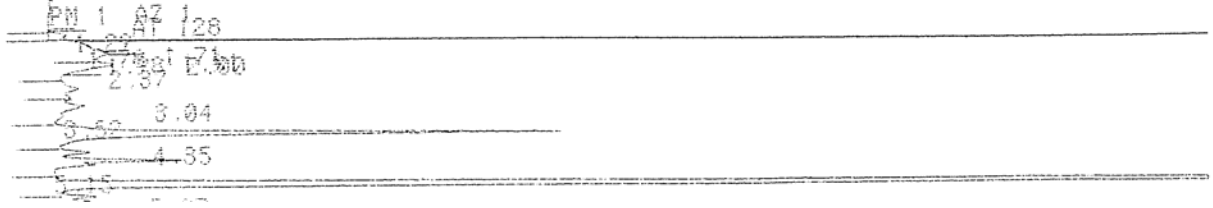

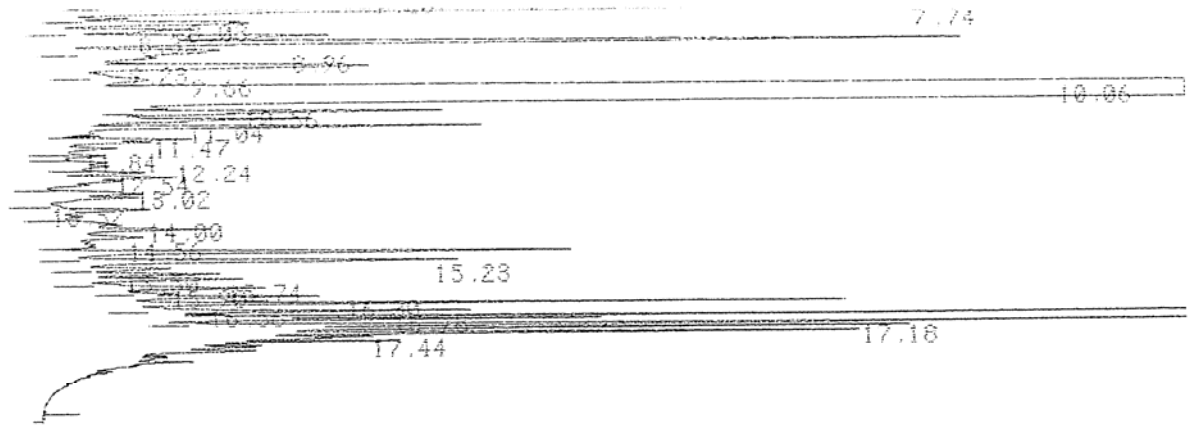

DATA SAVED TO BIN # 32

FID
AUB42-0740-1

FID/WESTON.PHX 06/19/92 18:28:51 CH= "B" PS= 1.

FILE 1. METHOD 5. RUN 99 INDEX 1 BIN 32

ANALYST: MC

SAMPLE 1 AUB4207402 BIN 32 NAME BRUN0095

SA	IS	XF
0.05	0.	1.

NAME	uG/L	RT	AREA	BC	RF
1	0.	1.29	744157	01	
2	0.	1.71	5845	02	
3	0.	1.78	2216	02	
4	0.	1.91	2635	02	
5	0.	1.98	2410	02	
6	0.	2.	3880	03	
VCL	1.688	2.37	58280	01	690526.496
8	0.	3.04	43062	02	
DCE11	3.446	3.52	96736	02	573018.481
DCA11	33.407	4.35	804509	02	481648.749
CLCH3	19.464	5.15	271862	02	279344.333
DCA12	160.688	5.87	4181827	02	520489.967
13	0.	6.22	106959	02	
TCE	1715.788	7.2	35664929	02	415726.603
15	0.	7.74	373745	02	
16	0.	8.03	1146797	02	
TCA112	32.751	8.35	591905	02	361455.555
18	0.	8.96	1947422	02	
19	0.	9.23	425407	02	
20	0.	9.66	874967	02	
PCE	15.035	10.06	235397	02	313122.653
22	0.	10.56	64117141	02	
23	0.	11.04	394522	02	
24	0.	11.47	650281	02	
25	0.	11.84	465676	02	
26	0.	12.24	98814	02	
27	0.	12.54	217322	02	
28	0.	13.02	545671	02	

PID

AVB42-0740-1005

DETECTED PEAKS: 92 REJECTED PEAKS: 1
AMOUNT STANDARD: 1.0000000
MULTIPLIER: 10.000000 DIVISOR: 0.0500000
NOISE: 148.8 OFFSET: 24

ERROR LOG:
COL TEMP
ANNOTATION OMITTED

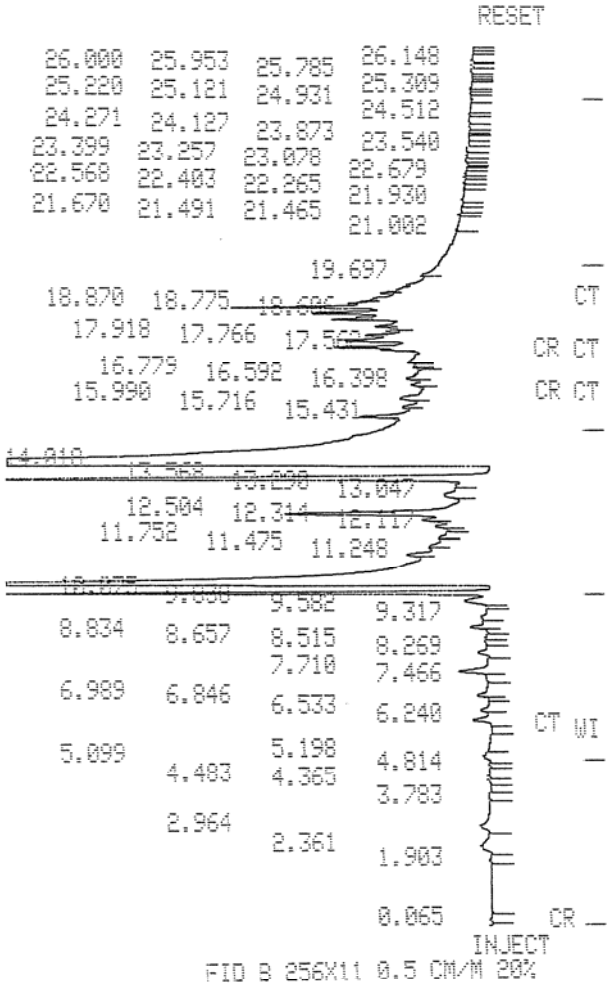

FID B 256X11 0.5 CM/M 20%

/.B/
SAMPLE TABLE...
ANALYST (MC
.A FAULT 1020: AT 9437

HECD range 1000
FID range 11

SAMPLE TABLE...
ANALYST (MC) AN="
.A FAULT 100: AT 9437
/.B/
/.A/
SAMPLE TABLE...
ANALYST (MC) AN="
INJECTIONS/SAMPLE [0-254] (1.

not used - poor elution

SAMPLES BETWEEN CALIB [0-254] (100)

CONC UNITS (uG/L) CU="
SAM IX NAME SAM AMT SCALE
SI= 1 SN=" AVB42-0740-2005SA= .05XF= 10
SI=
END OF DIALOG
/.B/
SAMPLE TABLE...
ANALYST (MC) AN="
INJECTIONS/SAMPLE [0-254] (1.) RA=

SAMPLES BETWEEN CALIB [0-254] (100)

CONC UNITS (uG/L) CU="
SAM IX NAME SAM AMT SCALE
SI= 1 SN=" AVB42-0740-2005SA= .05XF= 10
SI=
END OF DIALOG

CHANNEL A INJECT 06/19/92 19:02:57 STORED TO BIN # 97

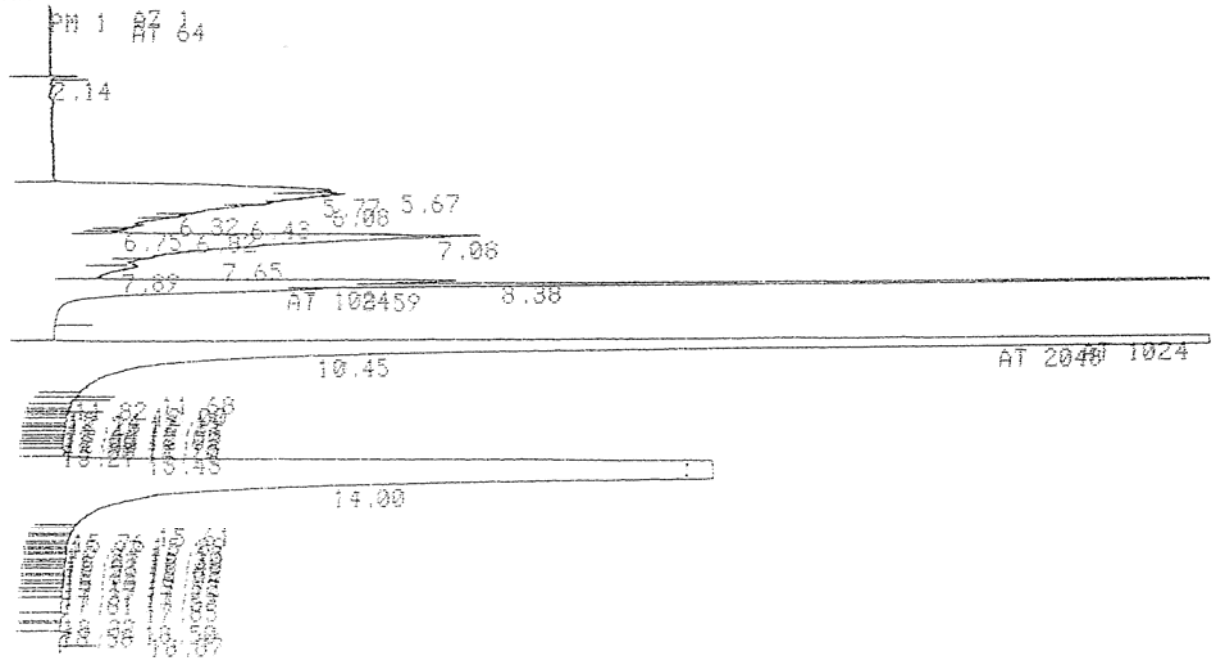

29	0.	13.36	331400 02
30	0.	14.	254236 02
31	0.	14.56	727100 02
32	0.	15.23	649627 02
33	0.	15.5	648976 02
34	0.	15.74	217098 02
35	0.	15.9	379868 02
36	0.	16.3	429080 02
37	0.	16.56	398206 02
38	0.	16.78	935893 02
39	0.	17.18	1734774 02
40	0.	17.44	4869232 03

TOTALS 1982.267 126167064

WARNING - MEMORY AT 6. K - UNPROTECTED CHROMATOGRAMS WILL BE REPLACED

FID
AVB 42-6740-1005

PID
AVB42-0746-100

VARIAN 3400 GAS CHROMATOGRAPH
METHOD 1 RUN 107
TIME 18:32 19 JUN 92
SAMPLE: 4207402005
RUN MODE: ANALYSIS
CALCULATION TYPE: EXTERNAL STANDARD

PEAK NO.	PEAK NAME	TIME MIN	RESULT UG/L	AREA COUNTS
1		1.903		15739
2		2.361		797503
3	VCL	2.964	47.8895	853110
4		3.783		12337
5		4.365		63411
6		4.483		79757
7		4.814		23692
8	DCE11	5.099	8.3344	294735
9		5.198		145746
10	TDCE	6.240	9.6395	717490
11		6.533		640698
12		6.846		247199
13		6.989		1309803
14	CDCE	7.466	16.0282	740239
15		7.710		2574034
16		8.269		1779088
17		8.515		905332
18		8.657		967169
19		8.834		774620
20		9.046		1779998
21		9.317		2505861
22		9.582		746770
23	TCE	9.838	87.0544	3162296
24		10.075		10357897
25		10.352		96135172
26		11.248		293278
27		11.475		124155
28		11.752		122720
29		12.117		548966
30		12.314		267499
31		12.504		14925960
32		13.047		6948744
33	PCE	13.290	121.2788	4199149
34		13.568		22035910
35		14.018		141866109
36		15.431		12179686
37		15.716		7769757
38		15.990		14173744
39		16.398		6856403
40		16.592		9356393
41		16.779		2426495
42		16.945		4444087
43		17.109		11510422
44		17.562		11423660
45		17.766		8212260
46		17.918		5084398
47		18.045		3394639
48		18.196		8225808
49		18.409		8919790
50		18.606		7217013
51		18.775		14541889
52		18.870		5330443
53		19.202		14750501
54		19.697		24113777
55		21.002		5678739
56		21.465		854036
57		21.491		2070272
58		21.670		1784269
59		21.930		3823040
60		22.265		1418004
61		22.403		1508288
62		22.568		862195
63		22.679		1193362
64		22.797		773409
65		22.865		321164
66		22.906		974309
67		23.078		862973
68		23.257		1412542
69		23.399		1164723
70		23.540		1098333
71		23.784		917478
72		23.873		435682
73		23.975		624094
74		24.127		771031
75		24.271		1145918
76		24.512		438077
77		24.607		1158552
78		24.931		714506
79		25.121		243090
80		25.220		259915
81		25.309		502949
82		25.532		150627
83		25.547		64165
84		25.580		108435
85		25.678		152625
86		25.785		264895
87		25.953		123442
88		26.001		88214
89		26.148		170193
90		26.399		29324
91		26.504		12658
TOTALS:			290.2250	533068926

HECD

HECD/WESTON.PHX 06/19/92 19:02:57 CH= "A" PS= 1.

FILE 1. METHOD 5. RUN 100 INDEX 1 BIN 97 not used

ANALYST: MC

SAMPLE 1 AVB42-0740 BIN 97 NAME ARUN0097

SA	IS	XF
0.05	0.	10.

NAME	uG/L	RT	AREA	BC	RF
1	0.	2.14	4818	01	
2	0.	5.67	447916	02	
3	0.	5.77	517621	02	
.TDCE	27.659	6.08	270345	021954828.	
5	0.	6.32	92460	02	
6	0.	6.43	155252	02	
DCA11	2.113	6.75	23619	022236083.	
8	0.	6.82	23626	02	
9	0.	7.00	934205	02	
CDCE	5.002	7.65	52123	022083899.	
CLCH3	7.646	7.69	114850	023003617.	
TCA111	23.138	8.38	318326	022751535.	
DCA12	532.173	8.59	5251829	031973730.	
TCE	6351.822	10.45	74051354	082331657.	
15	0.	11.60	6472	05	
16	0.	11.82	16689	05	
17	0.	12.	17147	06	
18	0.	12.14	9497	06	
19	0.	12.19	8591	07	
20	0.	12.26	4846	06	
21	0.	12.31	15009	06	
22	0.	12.44	33472	06	
23	0.	12.6	7320	06	
24	0.	12.66	1952	06	
25	0.	12.72	17217	06	
26	0.	12.8	18260	06	
27	0.	12.93	3272	06	
28	0.	13.	5303	06	
29	0.	13.1	1716	06	
30	0.	13.21	6549	06	
TCA112	9.746	13.43	89741	061841279.	
PCE	7820.444	14.	109803178	062808106.	
33	0.	15.61	353148	06	
34	0.	15.76	368187	06	
35	0.	15.89	141491	06	
36	0.	15.97	291054	06	
37	0.	16.13	83269	06	
38	0.	16.21	116644	06	
39	0.	16.3	67507	06	
40	0.	16.37	75539	06	
41	0.	16.48	84983	06	
42	0.	16.53	134742	06	
43	0.	16.68	53111	06	
44	0.	16.72	80382	06	

46	0.	16.93	138499 06
47	0.	17.12	32295 06
48	0.	17.17	69199 06
49	0.	17.29	56762 06
50	0.	17.37	60266 06
51	0.	17.53	46490 06
52	0.	17.61	45379 06
53	0.	17.85	93664 06
54	0.	18.32	110155 06
55	0.	18.5	8001 06
56	0.	18.58	27229 06
57	0.	18.87	215150 07

FID

not used

TOTALS 14779.747 195134950

WARNING - MEMORY AT 0. K - UNPROTECTED CHROMATOGRAMS WILL BE REPLACED

.CHANNEL B INJECT 06/19/92 19:02:57 REPLAYED FROM BIN # 33

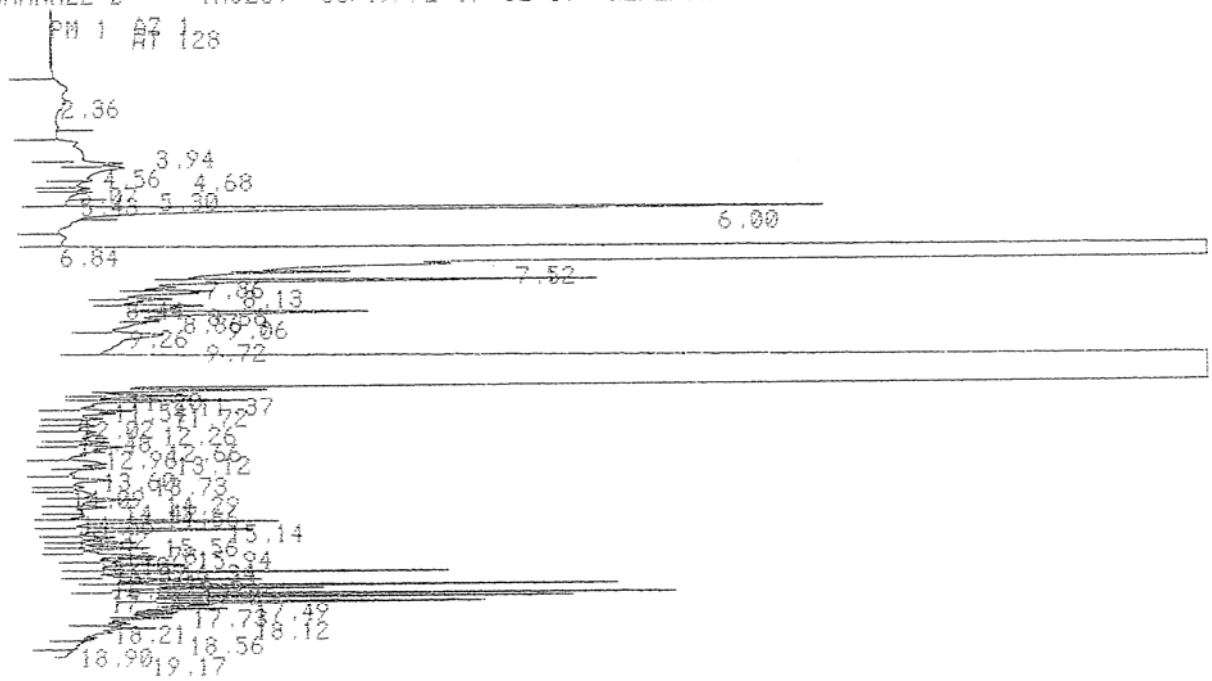

DATA SAVED TO BIN # 33

FID/WESTON.PHX 06/19/92 19:02:57 CH= "B" PS= 1.

FILE 1. METHOD 5. RUN 100 INDEX 1 BIN 33

ANALYST: MC

SAMPLE 1 AUB42-0740 BIN 33 NAME BRUN0096

SA	IS	XF
0.05	0.	10.

AVB4207402005

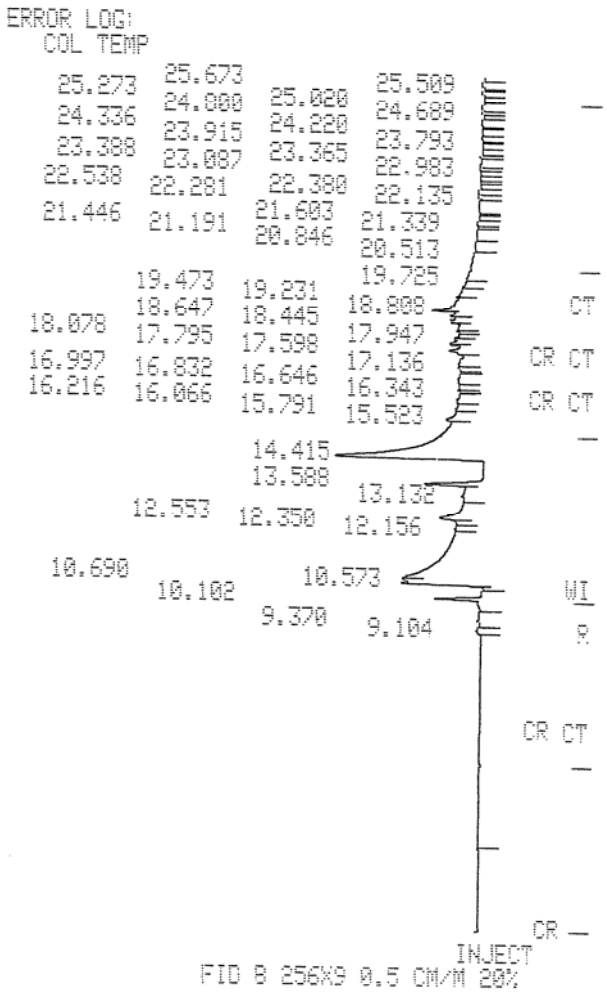

COPY

AIR TOXICS LTD.

SAMPLE NAME: PZ-02-50

ID#: 9511149-01A

EPA METHOD TO-14 GC/MS Full Scan

File Name:	9112205	Date of Collection:	11/9/95
Dil. Factor:	1500	Date of Analysis:	11/22/95

Compound	Det. Limit (ppbv)	Amount (ppbv)
Freon 12	750	Not Detected
Freon 114	750	Not Detected
Chloromethane	750	Not Detected
Vinyl Chloride	750	Not Detected
Bromomethane	750	Not Detected
Chloroethane	750	Not Detected
Freon 11	750	Not Detected
1,1-Dichloroethene	750	1300
Freon 113	750	3600
Methylene Chloride	750	Not Detected
1,1-Dichloroethane	750	52000
cis-1,2-Dichloroethene	750	Not Detected
Chloroform	750	1600
1,1,1-Trichloroethane	750	8500
Carbon Tetrachloride	750	Not Detected
Benzene	750	Not Detected
1,2-Dichloroethane	750	Not Detected
Trichloroethene	750	78000
1,2-Dichloropropane	750	Not Detected
cis-1,3-Dichloropropene	750	Not Detected
Toluene	750	Not Detected
trans-1,3-Dichloropropene	750	Not Detected
1,1,2-Trichloroethane	750	Not Detected
Tetrachloroethene	750	330000 E
Ethylene Dibromide	750	Not Detected
Chlorobenzene	750	Not Detected
Ethyl Benzene	750	Not Detected
m,p-Xylene	750	Not Detected
o-Xylene	750	Not Detected
Styrene	750	Not Detected
1,1,2,2-Tetrachloroethane	750	Not Detected
1,3,5-Trimethylbenzene	750	Not Detected
1,2,4-Trimethylbenzene	750	Not Detected
1,3-Dichlorobenzene	750	Not Detected
1,4-Dichlorobenzene	750	Not Detected
Chlorotoluene	750	Not Detected
1,2-Dichlorobenzene	750	Not Detected
1,2,4-Trichlorobenzene	750	Not Detected
Hexachlorobutadiene	750	Not Detected

AIR TOXICS LTD.

SAMPLE NAME: PZ-02-50

ID#: 9511149-01A

EPA METHOD TO-14 GC/MS Full Scan

File Name:	9112205	Date of Collection:	11/9/95
Dil. Factor:	1500	Date of Analysis:	11/22/95

Compound	Det. Limit (ppbv)	Amount (ppbv)
Propylene	3000	Not Detected
1,3-Butadiene	3000	Not Detected
Acetone	3000	Not Detected
Carbon Disulfide	3000	Not Detected
2-Propanol	3000	Not Detected
trans-1,2-Dichloroethene	3000	Not Detected
Vinyl Acetate	3000	Not Detected
Chloroprene	3000	Not Detected
2-Butanone (Methyl Ethyl Ketone)	3000	Not Detected
Hexane	3000	Not Detected
Tetrahydrofuran	3000	Not Detected
Cyclohexane	3000	Not Detected
1,4-Dioxane	3000	Not Detected
Bromodichloromethane	3000	Not Detected
4-Methyl-2-pentanone	3000	Not Detected
2-Hexanone	3000	Not Detected
Dibromochloromethane	3000	Not Detected
Bromoform	3000	Not Detected
4-Ethyltoluene	3000	Not Detected
Ethanol	3000	Not Detected
Methyl t-Butyl Ether (MTBE)	3000	Not Detected
Heptane	3000	Not Detected

E = Exceeds instrument calibration range, but within linear range.

Container Type: 6 Liter Summa Canister

Surrogates	% Recovery	Method Limits
Octafluorotoluene	96	70-130
Toluene-d8	112	70-130
4-Bromofluorobenzene	101	70-130

AIR TOXICS LTD.

SAMPLE NAME: PZ-02-25

ID#: 9511149-02A

EPA METHOD TO-14 GC/MS Full Scan

File Name:	9112206	**Date of Collection:**	11/9/95
Dil. Factor:	1100	**Date of Analysis:**	11/22/95

Compound	Det. Limit (ppbv)	Amount (ppbv)
Freon 12	550	Not Detected
Freon 114	550	Not Detected
Chloromethane	550	Not Detected
Vinyl Chloride	550	Not Detected
Bromomethane	550	Not Detected
Chloroethane	550	Not Detected
Freon 11	550	Not Detected
1,1-Dichloroethene	550	Not Detected
Freon 113	550	Not Detected
Methylene Chloride	550	Not Detected
1,1-Dichloroethane	550	10000
cis-1,2-Dichloroethene	550	Not Detected
Chloroform	550	Not Detected
1,1,1-Trichloroethane	550	1800
Carbon Tetrachloride	550	Not Detected
Benzene	550	Not Detected
1,2-Dichloroethane	550	Not Detected
Trichloroethene	550	60000
1,2-Dichloropropane	550	Not Detected
cis-1,3-Dichloropropene	550	Not Detected
Toluene	550	Not Detected
trans-1,3-Dichloropropene	550	Not Detected
1,1,2-Trichloroethane	550	Not Detected
Tetrachloroethene	550	180000
Ethylene Dibromide	550	Not Detected
Chlorobenzene	550	Not Detected
Ethyl Benzene	550	Not Detected
m,p-Xylene	550	Not Detected
o-Xylene	550	Not Detected
Styrene	550	Not Detected
1,1,2,2-Tetrachloroethane	550	Not Detected
1,3,5-Trimethylbenzene	550	Not Detected
1,2,4-Trimethylbenzene	550	Not Detected
1,3-Dichlorobenzene	550	Not Detected
1,4-Dichlorobenzene	550	Not Detected
Chlorotoluene	550	Not Detected
1,2-Dichlorobenzene	550	Not Detected
1,2,4-Trichlorobenzene	550	Not Detected
Hexachlorobutadiene	550	Not Detected

AIR TOXICS LTD.

SAMPLE NAME: PZ-02-25

ID#: 9511149-02A

EPA METHOD TO-14 GC/MS Full Scan

File Name:	**9112206**	**Date of Collection:**	**11/9/95**
Dil. Factor:	**1100**	**Date of Analysis:**	**11/22/95**

Compound	Det. Limit (ppbv)	Amount (ppbv)
Propylene	2200	Not Detected
1,3-Butadiene	2200	Not Detected
Acetone	2200	Not Detected
Carbon Disulfide	2200	Not Detected
2-Propanol	2200	Not Detected
trans-1,2-Dichloroethene	2200	Not Detected
Vinyl Acetate	2200	Not Detected
Chloroprene	2200	Not Detected
2-Butanone (Methyl Ethyl Ketone)	2200	Not Detected
Hexane	2200	Not Detected
Tetrahydrofuran	2200	Not Detected
Cyclohexane	2200	Not Detected
1,4-Dioxane	2200	Not Detected
Bromodichloromethane	2200	Not Detected
4-Methyl-2-pentanone	2200	Not Detected
2-Hexanone	2200	Not Detected
Dibromochloromethane	2200	Not Detected
Bromoform	2200	Not Detected
4-Ethyltoluene	2200	Not Detected
Ethanol	2200	Not Detected
Methyl t-Butyl Ether (MTBE)	2200	Not Detected
Heptane	2200	Not Detected

Container Type: 6 Liter Summa Canister

Surrogates	% Recovery	Method Limits
Octafluorotoluene	92	70-130
Toluene-d8	114	70-130
4-Bromofluorobenzene	104	70-130

AIR TOXICS LTD.

SAMPLE NAME: VW-1-1

ID#: 9511149-03A

EPA METHOD TO-14 GC/MS Full Scan

File Name:	9112207	**Date of Collection:**	11/9/95
Dil. Factor:	1600	**Date of Analysis:**	11/22/95

Compound	Det. Limit (ppbv)	Amount (ppbv)
Freon 12	800	Not Detected
Freon 114	800	Not Detected
Chloromethane	800	Not Detected
Vinyl Chloride	800	Not Detected
Bromomethane	800	Not Detected
Chloroethane	800	Not Detected
Freon 11	800	Not Detected
1,1-Dichloroethene	800	Not Detected
Freon 113	800	Not Detected
Methylene Chloride	800	Not Detected
1,1-Dichloroethane	800	16000
cis-1,2-Dichloroethene	800	Not Detected
Chloroform	800	1700
1,1,1-Trichloroethane	800	2400
Carbon Tetrachloride	800	Not Detected
Benzene	800	Not Detected
1,2-Dichloroethane	800	Not Detected
Trichloroethene	800	86000
1,2-Dichloropropane	800	Not Detected
cis-1,3-Dichloropropene	800	Not Detected
Toluene	800	Not Detected
trans-1,3-Dichloropropene	800	Not Detected
1,1,2-Trichloroethane	800	Not Detected
Tetrachloroethene	800	310000
Ethylene Dibromide	800	Not Detected
Chlorobenzene	800	Not Detected
Ethyl Benzene	800	Not Detected
m,p-Xylene	800	Not Detected
o-Xylene	800	Not Detected
Styrene	800	Not Detected
1,1,2,2-Tetrachloroethane	800	Not Detected
1,3,5-Trimethylbenzene	800	Not Detected
1,2,4-Trimethylbenzene	800	Not Detected
1,3-Dichlorobenzene	800	Not Detected
1,4-Dichlorobenzene	800	Not Detected
Chlorotoluene	800	Not Detected
1,2-Dichlorobenzene	800	Not Detected
1,2,4-Trichlorobenzene	800	Not Detected
Hexachlorobutadiene	800	Not Detected

AIR TOXICS LTD.

SAMPLE NAME: VW-1-1

ID#: 9511149-03A

EPA METHOD TO-14 GC/MS Full Scan

File Name:	**9112207**	**Date of Collection:**	**11/9/95**
Dil. Factor:	**1600**	**Date of Analysis:**	**11/22/95**

Compound	Det. Limit (ppbv)	Amount (ppbv)
Propylene	3200	Not Detected
1,3-Butadiene	3200	Not Detected
Acetone	3200	Not Detected
Carbon Disulfide	3200	Not Detected
2-Propanol	3200	Not Detected
trans-1,2-Dichloroethene	3200	Not Detected
Vinyl Acetate	3200	Not Detected
Chloroprene	3200	Not Detected
2-Butanone (Methyl Ethyl Ketone)	3200	Not Detected
Hexane	3200	Not Detected
Tetrahydrofuran	3200	Not Detected
Cyclohexane	3200	Not Detected
1,4-Dioxane	3200	Not Detected
Bromodichloromethane	3200	Not Detected
4-Methyl-2-pentanone	3200	Not Detected
2-Hexanone	3200	Not Detected
Dibromochloromethane	3200	Not Detected
Bromoform	3200	Not Detected
4-Ethyltoluene	3200	Not Detected
Ethanol	3200	Not Detected
Methyl t-Butyl Ether (MTBE)	3200	Not Detected
Heptane	3200	Not Detected

Container Type: 6 Liter Summa Canister

Surrogates	% Recovery	Method Limits
Octafluorotoluene	**93**	**70-130**
Toluene-d8	**113**	**70-130**
4-Bromofluorobenzene	**102**	**70-130**

AIR TOXICS LTD.

SAMPLE NAME: VW-1-2

ID#: 9511149-04A

EPA METHOD TO-14 GC/MS Full Scan

File Name:	9112208	Date of Collection:	11/10/95
Dil. Factor:	1000	Date of Analysis:	11/22/95

Compound	Det. Limit (ppbv)	Amount (ppbv)
Freon 12	500	Not Detected
Freon 114	500	Not Detected
Chloromethane	500	Not Detected
Vinyl Chloride	500	Not Detected
Bromomethane	500	Not Detected
Chloroethane	500	Not Detected
Freon 11	500	Not Detected
1,1-Dichloroethene	500	Not Detected
Freon 113	500	Not Detected
Methylene Chloride	500	Not Detected
1,1-Dichloroethane	500	9100
cis-1,2-Dichloroethene	500	Not Detected
Chloroform	500	1200
1,1,1-Trichloroethane	500	1200
Carbon Tetrachloride	500	Not Detected
Benzene	500	Not Detected
1,2-Dichloroethane	500	Not Detected
Trichloroethene	500	61000
1,2-Dichloropropane	500	Not Detected
cis-1,3-Dichloropropene	500	Not Detected
Toluene	500	Not Detected
trans-1,3-Dichloropropene	500	Not Detected
1,1,2-Trichloroethane	500	Not Detected
Tetrachloroethene	500	200000
Ethylene Dibromide	500	Not Detected
Chlorobenzene	500	Not Detected
Ethyl Benzene	500	Not Detected
m,p-Xylene	500	Not Detected
o-Xylene	500	Not Detected
Styrene	500	Not Detected
1,1,2,2-Tetrachloroethane	500	Not Detected
1,3,5-Trimethylbenzene	500	Not Detected
1,2,4-Trimethylbenzene	500	Not Detected
1,3-Dichlorobenzene	500	Not Detected
1,4-Dichlorobenzene	500	Not Detected
Chlorotoluene	500	Not Detected
1,2-Dichlorobenzene	500	Not Detected
1,2,4-Trichlorobenzene	500	Not Detected
Hexachlorobutadiene	500	Not Detected

AIR TOXICS LTD.

SAMPLE NAME: VW-1-2

ID#: 9511149-04A

EPA METHOD TO-14 GC/MS Full Scan

File Name:	9112208	**Date of Collection:**	11/10/95
Dil. Factor:	1000	**Date of Analysis:**	11/22/95

Compound	Det. Limit (ppbv)	Amount (ppbv)
Propylene	2000	Not Detected
1,3-Butadiene	2000	Not Detected
Acetone	2000	Not Detected
Carbon Disulfide	2000	Not Detected
2-Propanol	2000	Not Detected
trans-1,2-Dichloroethene	2000	Not Detected
Vinyl Acetate	2000	Not Detected
Chloroprene	2000	Not Detected
2-Butanone (Methyl Ethyl Ketone)	2000	Not Detected
Hexane	2000	Not Detected
Tetrahydrofuran	2000	Not Detected
Cyclohexane	2000	Not Detected
1,4-Dioxane	2000	6900
Bromodichloromethane	2000	Not Detected
4-Methyl-2-pentanone	2000	Not Detected
2-Hexanone	2000	2100
Dibromochloromethane	2000	Not Detected
Bromoform	2000	Not Detected
4-Ethyltoluene	2000	Not Detected
Ethanol	2000	Not Detected
Methyl t-Butyl Ether (MTBE)	2000	Not Detected
Heptane	2000	Not Detected

Container Type: 6 Liter Summa Canister

Surrogates	% Recovery	Method Limits
Octafluorotoluene	80	70-130
Toluene-d8	116	70-130
4-Bromofluorobenzene	107	70-130

AIR TOXICS LTD.

SAMPLE NAME: VW-1-3

ID#: 9511149-05A

EPA METHOD TO-14 GC/MS Full Scan

File Name:	9112209	Date of Collection:	11/10/95
Dil. Factor:	760	Date of Analysis:	11/22/95

Compound	Det. Limit (ppbv)	Amount (ppbv)
Freon 12	380	Not Detected
Freon 114	380	Not Detected
Chloromethane	380	Not Detected
Vinyl Chloride	380	Not Detected
Bromomethane	380	Not Detected
Chloroethane	380	Not Detected
Freon 11	380	Not Detected
1,1-Dichloroethene	380	470
Freon 113	380	Not Detected
Methylene Chloride	380	Not Detected
1,1-Dichloroethane	380	7000
cis-1,2-Dichloroethene	380	Not Detected
Chloroform	380	890
1,1,1-Trichloroethane	380	800
Carbon Tetrachloride	380	Not Detected
Benzene	380	Not Detected
1,2-Dichloroethane	380	Not Detected
Trichloroethene	380	48000
1,2-Dichloropropane	380	Not Detected
cis-1,3-Dichloropropene	380	Not Detected
Toluene	380	Not Detected
trans-1,3-Dichloropropene	380	Not Detected
1,1,2-Trichloroethane	380	Not Detected
Tetrachloroethene	380	140000
Ethylene Dibromide	380	Not Detected
Chlorobenzene	380	Not Detected
Ethyl Benzene	380	Not Detected
m,p-Xylene	380	Not Detected
o-Xylene	380	Not Detected
Styrene	380	Not Detected
1,1,2,2-Tetrachloroethane	380	Not Detected
1,3,5-Trimethylbenzene	380	Not Detected
1,2,4-Trimethylbenzene	380	Not Detected
1,3-Dichlorobenzene	380	Not Detected
1,4-Dichlorobenzene	380	Not Detected
Chlorotoluene	380	Not Detected
1,2-Dichlorobenzene	380	Not Detected
1,2,4-Trichlorobenzene	380	Not Detected
Hexachlorobutadiene	380	Not Detected

AIR TOXICS LTD.

SAMPLE NAME: VW-1-3

ID#: 9511149-05A

EPA METHOD TO-14 GC/MS Full Scan

File Name:	9112209	**Date of Collection:**	11/10/95
Dil. Factor:	760	**Date of Analysis:**	11/22/95

Compound	Det. Limit (ppbv)	Amount (ppbv)
Propylene	1500	Not Detected
1,3-Butadiene	1500	Not Detected
Acetone	1500	Not Detected
Carbon Disulfide	1500	Not Detected
2-Propanol	1500	Not Detected
trans-1,2-Dichloroethene	1500	Not Detected
Vinyl Acetate	1500	Not Detected
Chloroprene	1500	Not Detected
2-Butanone (Methyl Ethyl Ketone)	1500	Not Detected
Hexane	1500	Not Detected
Tetrahydrofuran	1500	Not Detected
Cyclohexane	1500	Not Detected
1,4-Dioxane	1500	Not Detected
Bromodichloromethane	1500	Not Detected
4-Methyl-2-pentanone	1500	Not Detected
2-Hexanone	1500	Not Detected
Dibromochloromethane	1500	Not Detected
Bromoform	1500	Not Detected
4-Ethyltoluene	1500	Not Detected
Ethanol	1500	Not Detected
Methyl t-Butyl Ether (MTBE)	1500	Not Detected
Heptane	1500	Not Detected

Container Type: 6 Liter Summa Canister

Surrogates	% Recovery	Method Limits
Octafluorotoluene	87	70-130
Toluene-d8	114	70-130
4-Bromofluorobenzene	103	70-130

AIR TOXICS LTD.

SAMPLE NAME: Carb-EFF

ID#: 9511149-06A

EPA METHOD TO-14 GC/MS Full Scan

File Name:	9112210	Date of Collection:	11/10/95
Dil. Factor:	5.2	Date of Analysis:	11/22/95

Compound	Det. Limit (ppbv)	Amount (ppbv)
Freon 12	2.6	39
Freon 114	2.6	Not Detected
Chloromethane	2.6	Not Detected
Vinyl Chloride	2.6	Not Detected
Bromomethane	2.6	Not Detected
Chloroethane	2.6	Not Detected
Freon 11	2.6	Not Detected
1,1-Dichloroethene	2.6	Not Detected
Freon 113	2.6	Not Detected
Methylene Chloride	2.6	Not Detected
1,1-Dichloroethane	2.6	Not Detected
cis-1,2-Dichloroethene	2.6	Not Detected
Chloroform	2.6	Not Detected
1,1,1-Trichloroethane	2.6	Not Detected
Carbon Tetrachloride	2.6	Not Detected
Benzene	2.6	Not Detected
1,2-Dichloroethane	2.6	Not Detected
Trichloroethene	2.6	Not Detected
1,2-Dichloropropane	2.6	Not Detected
cis-1,3-Dichloropropene	2.6	Not Detected
Toluene	2.6	Not Detected
trans-1,3-Dichloropropene	2.6	Not Detected
1,1,2-Trichloroethane	2.6	Not Detected
Tetrachloroethene	2.6	Not Detected
Ethylene Dibromide	2.6	Not Detected
Chlorobenzene	2.6	Not Detected
Ethyl Benzene	2.6	Not Detected
m,p-Xylene	2.6	Not Detected
o-Xylene	2.6	Not Detected
Styrene	2.6	Not Detected
1,1,2,2-Tetrachloroethane	2.6	Not Detected
1,3,5-Trimethylbenzene	2.6	3.5
1,2,4-Trimethylbenzene	2.6	Not Detected
1,3-Dichlorobenzene	2.6	Not Detected
1,4-Dichlorobenzene	2.6	Not Detected
Chlorotoluene	2.6	Not Detected
1,2-Dichlorobenzene	2.6	Not Detected
1,2,4-Trichlorobenzene	2.6	Not Detected
Hexachlorobutadiene	2.6	Not Detected

AIR TOXICS LTD.

SAMPLE NAME: Carb-EFF

ID#: 9511149-06A

EPA METHOD TO-14 GC/MS Full Scan

File Name:	9112210	**Date of Collection:**	11/10/95
Dil. Factor:	5.2	**Date of Analysis:**	11/22/95

Compound	Det. Limit (ppbv)	Amount (ppbv)
Propylene	10	Not Detected
1,3-Butadiene	10	Not Detected
Acetone	10	Not Detected
Carbon Disulfide	10	Not Detected
2-Propanol	10	Not Detected
trans-1,2-Dichloroethene	10	Not Detected
Vinyl Acetate	10	Not Detected
Chloroprene	10	Not Detected
2-Butanone (Methyl Ethyl Ketone)	10	Not Detected
Hexane	10	Not Detected
Tetrahydrofuran	10	Not Detected
Cyclohexane	10	Not Detected
1,4-Dioxane	10	Not Detected
Bromodichloromethane	10	Not Detected
4-Methyl-2-pentanone	10	Not Detected
2-Hexanone	10	Not Detected
Dibromochloromethane	10	Not Detected
Bromoform	10	Not Detected
4-Ethyltoluene	10	Not Detected
Ethanol	10	Not Detected
Methyl t-Butyl Ether (MTBE)	10	31
Heptane	10	Not Detected

Container Type: 6 Liter Summa Canister

Surrogates	% Recovery	Method Limits
Octafluorotoluene	88	70-130
Toluene-d8	115	70-130
4-Bromofluorobenzene	104	70-130

AIR TOXICS LTD.

SAMPLE NAME: Lab Blank

ID#: 9511149-07A

EPA METHOD TO-14 GC/MS Full Scan

File Name:	9112204	Date of Collection:	NA
Dil. Factor:	1.0	Date of Analysis:	11/22/95

Compound	Det. Limit (ppbv)	Amount (ppbv)
Freon 12	0.50	Not Detected
Freon 114	0.50	Not Detected
Chloromethane	0.50	Not Detected
Vinyl Chloride	0.50	Not Detected
Bromomethane	0.50	Not Detected
Chloroethane	0.50	Not Detected
Freon 11	0.50	Not Detected
1,1-Dichloroethene	0.50	Not Detected
Freon 113	0.50	Not Detected
Methylene Chloride	0.50	Not Detected
1,1-Dichloroethane	0.50	Not Detected
cis-1,2-Dichloroethene	0.50	Not Detected
Chloroform	0.50	Not Detected
1,1,1-Trichloroethane	0.50	Not Detected
Carbon Tetrachloride	0.50	Not Detected
Benzene	0.50	Not Detected
1,2-Dichloroethane	0.50	Not Detected
Trichloroethene	0.50	Not Detected
1,2-Dichloropropane	0.50	Not Detected
cis-1,3-Dichloropropene	0.50	Not Detected
Toluene	0.50	Not Detected
trans-1,3-Dichloropropene	0.50	Not Detected
1,1,2-Trichloroethane	0.50	Not Detected
Tetrachloroethene	0.50	Not Detected
Ethylene Dibromide	0.50	Not Detected
Chlorobenzene	0.50	Not Detected
Ethyl Benzene	0.50	Not Detected
m,p-Xylene	0.50	Not Detected
o-Xylene	0.50	Not Detected
Styrene	0.50	Not Detected
1,1,2,2-Tetrachloroethane	0.50	Not Detected
1,3,5-Trimethylbenzene	0.50	Not Detected
1,2,4-Trimethylbenzene	0.50	Not Detected
1,3-Dichlorobenzene	0.50	Not Detected
1,4-Dichlorobenzene	0.50	Not Detected
Chlorotoluene	0.50	Not Detected
1,2-Dichlorobenzene	0.50	Not Detected
1,2,4-Trichlorobenzene	0.50	Not Detected
Hexachlorobutadiene	0.50	Not Detected

AIR TOXICS LTD.

SAMPLE NAME: Lab Blank

ID#: 9511149-07A

EPA METHOD TO-14 GC/MS Full Scan

File Name:	9112204	**Date of Collection:**	NA
Dil. Factor:	1.0	**Date of Analysis:**	11/22/95

Compound	Det. Limit (ppbv)	Amount (ppbv)
Propylene	2.0	Not Detected
1,3-Butadiene	2.0	Not Detected
Acetone	2.0	Not Detected
Carbon Disulfide	2.0	Not Detected
2-Propanol	2.0	Not Detected
trans-1,2-Dichloroethene	2.0	Not Detected
Vinyl Acetate	2.0	Not Detected
Chloroprene	2.0	Not Detected
2-Butanone (Methyl Ethyl Ketone)	2.0	Not Detected
Hexane	2.0	Not Detected
Tetrahydrofuran	2.0	Not Detected
Cyclohexane	2.0	Not Detected
1,4-Dioxane	2.0	Not Detected
Bromodichloromethane	2.0	Not Detected
4-Methyl-2-pentanone	2.0	Not Detected
2-Hexanone	2.0	Not Detected
Dibromochloromethane	2.0	Not Detected
Bromoform	2.0	Not Detected
4-Ethyltoluene	2.0	Not Detected
Ethanol	2.0	Not Detected
Methyl t-Butyl Ether (MTBE)	2.0	Not Detected
Heptane	2.0	Not Detected

Container Type: NA

Surrogates	% Recovery	Method Limits
Octafluorotoluene	97	70-130
Toluene-d8	110	70-130
4-Bromofluorobenzene	106	70-130

AIR TOXICS LTD.

AN ENVIRONMENTAL ANALYTICAL LABORATORY

180 BLUE RAVINE ROAD, SUITE B
FOLSOM, CA 95630-4719
(916) 985-1000 FAX: (916) 985-1020

CHAIN-OF-CUSTODY RECORD

№ 006152

Page ___ of ___

Contact Person: CURTIS WRIGHT
Company: Groundwater Technology
Address: 1100 E. University #116 City: Tempe State: Az Zip: 85281
Phone: (602) 9660808 FAX: (602) 8940955
Collected By: Signature: [signature]

Project info:
P.O. #:
Project #: 023300118-7064
Project Name: MCMM

Turn Around Time:
☒ Normal
☐ Rush ___ Specify

Lab I.D.	Field Sample I.D.	Date & Time	Analyses Requested	Canister Pressure / Vacuum Initial	Final	Receipt
01A	PZ-02-50	~~11-10~~ 11-09-95 / ~~0934~~ 0922 mo	TO-14 VOC's			3.0"Hg
02A	PZ-02-25 ⊛	11-09-95 / ~~0934~~ 0934 mo	TO-14 VOC's			25.5"Hg
03A	VW-1 -1	11-09-95 / 1445	TO-14 VOC's			4.0"Hg
04A	VW-1 -2	11-10-95 / 1030	TO-14 VOC's			4.0"Hg
05A	VW-1 -3	11-10-95 / 1500	TO-14 VOC's			4.0"Hg
06A	Carb-EFF	11-10-95 / 1505	TO-14 VOC's			4.0"Hg
						11-15-95 [signature]

Relinquished By: (Signature) [signature] Date/Time 0900 11-13-95 Print Name: Michael E. Orcutt
Relinquished By: (Signature) Date/Time
Received By: (Signature) Date/Time
Relinquished By: (Signature) Date/Time
Received By: (Signature) [signature] ATL Date/Time 11/15/95 10:00

Notes:
⊛ Grab sample @ PZ-02-25
small vac. on can. (>3 seconds)

Lab Use Only	Shipper Name	Air Bill #	Opened By:	Date/Time	Temp. (°C)	Condition	Custody Seals Intact?	Work Order #
	Airborne	9740696070 / 9740695974	[signature]	11/15/95 10:00	Ambient	Good	(Yes) No None N/A	9511149

Form 1293 rev. 06

RECEIVED

SEP 25 1997

CORELAB

GULF STATES ANALYTICAL

09/11/97

Mr. Ken Greene
Fluor Daniel - GTI
Fluor Daniel - GTI
1100 E. University Dr. #116
Tempe, AZ 85281

Reference:
Project: MCRM - 320 W. Lincoln
Project No.: 023300635
Date Received: 08/27/97
GSA Group: 32259 Group Report Date: 09/11/97

Dear Mr. Greene:

Enclosed are the analytical results for your above referenced project. The following samples are included in the report.

MC-NO6-1 :167876 MC-NO6-2 :167877 VW-1-Inf :167878
VW-1-Eff :167879

All holding times were met for the tests performed on these samples.

Our A2LA accreditation requires that, should this report be reproduced, it must be reproduced in total.

Enclosed please find the Quality Control Summary. All quality control results for the QC batch that are applicable to this sample(s) are acceptable except as noted in the QC batch reports.

If the report is acceptable, please approve the enclosed invoice and forward it for payment.

Thank you for selecting Core Lab - Gulf States Analytical to serve as your analytical laboratory on this project. If you have any questions concerning these results, please feel free to contact me at any time.

We look forward to working with you on future projects.

Sincerely yours,

Randall Wright

Randall Wright
Project Manager

Core Laboratories, Inc.
6310 Rothway, Houston, Texas 77040, (713) 690-4444, Fax (713) 690-5646

CORELAB

GULF STATES ANALYTICAL

ANALYSIS SUMMARY REPORT

Fluor Daniel - GTI
Fluor Daniel - GTI
1100 E. University Dr. #116
Tempe, AZ 85281

GSA Group: 32259
Date Reported: 09/11/97
Date Received: 08/27/97

Attn: Mr. Ken Greene
Project: MCRM - 320 W. Lincoln

Purchase Order:
Project No.: 023300635

Test	Analysis	Results as Received	Units	Limit of Quantitation
Sample:167876 - 08/26/97 - MC-NO6-1				
8340	Volatiles, TO-14			
	Dichlorodifluoromethane	ND	ppbv	10
	Chloromethane (Methyl chloride)	ND	ppbv	10
	1,2-Dichlorotetrafluoroethane	ND	ppbv	10
	Vinyl chloride	ND	ppbv	10
	Bromomethane (Methyl bromide)	ND	ppbv	10
	Chloroethane (Ethyl chloride)	ND	ppbv	10
	Trichlorofluoromethane	ND	ppbv	10
	1,1-Dichloroethene	164	ppbv	10
	Dichloromethane	61	ppbv	10
	Allyl chloride (3-Chloropropene)	ND	ppbv	10
	1,1,2-Trichloro-1,2,2-trifluoroetha	107	ppbv	10
	1,1-Dichloroethane	4,660	ppbv	700
	cis-1,2-Dichloroethene	1,940	ppbv	700
	Chloroform	205	ppbv	10
	1,2-Dichloroethane	306	ppbv	10
	1,1,1-Trichloroethane	186	ppbv	10
	Benzene	ND	ppbv	10
	Carbon tetrachloride	ND	ppbv	10
	1,2-Dichloropropane	ND	ppbv	10
	Trichloroethene	12,200	ppbv	700
	cis-1,3-Dichloropropene	ND	ppbv	10
	trans-1,3-Dichloropropene	ND	ppbv	10
	1,1,2-Trichloroethane	101	ppbv	10
	Toluene	ND	ppbv	10
	Ethylene dibromide (EDB)	ND	ppbv	10
	Tetrachloroethene	68,200	ppbv	1,000
	Chlorobenzene	275	ppbv	10
	Ethylbenzene	ND	ppbv	10
	m,p-Xylene	ND	ppbv	10
	Styrene	ND	ppbv	10
	1,1,2,2-Tetrachloroethane	ND	ppbv	10
	o-Xylene	ND	ppbv	10
	4-Ethyltoluene	ND	ppbv	10
	1,3,5-Trimethylbenzene	ND	ppbv	10

ANALYSIS SUMMARY REPORT

Fluor Daniel - GTI

GSA Group: 32259

Test	Analysis	Results as Received	Units	Limit of Quantitation
Sample:167876 - 08/26/97 - MC-NO6-1				
8340	Volatiles, TO-14			
	1,2,4-Trimethylbenzene (Pseudocumen	ND	ppbv	10
	Benzyl chloride	ND	ppbv	10
	1,3-Dichlorobenzene	ND	ppbv	10
	1,4-Dichlorobenzene	ND	ppbv	10
	1,2-Dichlorobenzene	ND	ppbv	10
	1,2,4-Trichlorobenzene	ND	ppbv	10
	Hexachloro-1,3-butadiene	ND	ppbv	10
Sample:167877 - 08/26/97 - MC-NO6-2				
8340	Volatiles, TO-14			
	Dichlorodifluoromethane	ND	ppbv	7
	Chloromethane (Methyl chloride)	ND	ppbv	7
	1,2-Dichlorotetrafluoroethane	ND	ppbv	7
	Vinyl chloride	ND	ppbv	7
	Bromomethane (Methyl bromide)	ND	ppbv	7
	Chloroethane (Ethyl chloride)	ND	ppbv	7
	Trichlorofluoromethane	ND	ppbv	7
	1,1-Dichloroethene	ND	ppbv	7
	Dichloromethane	ND	ppbv	7
	Allyl chloride (3-Chloropropene)	ND	ppbv	7
	1,1,2-Trichloro-1,2,2-trifluoroetha	ND	ppbv	7
	1,1-Dichloroethane	120	ppbv	7
	cis-1,2-Dichloroethene	ND	ppbv	7
	Chloroform	10	ppbv	7
	1,2-Dichloroethane	ND	ppbv	7
	1,1,1-Trichloroethane	ND	ppbv	7
	Benzene	ND	ppbv	7
	Carbon tetrachloride	ND	ppbv	7
	1,2-Dichloropropane	ND	ppbv	7
	Trichloroethene	994	ppbv	30
	cis-1,3-Dichloropropene	ND	ppbv	7
	trans-1,3-Dichloropropene	ND	ppbv	7
	1,1,2-Trichloroethane	ND	ppbv	7
	Toluene	ND	ppbv	7
	Ethylene dibromide (EDB)	ND	ppbv	7
	Tetrachloroethene	3,830	ppbv	700
	Chlorobenzene	ND	ppbv	7
	Ethylbenzene	ND	ppbv	7
	m,p-Xylene	ND	ppbv	7
	Styrene	ND	ppbv	7
	1,1,2,2-Tetrachloroethane	ND	ppbv	7
	o-Xylene	ND	ppbv	7

ANALYSIS SUMMARY REPORT

Fluor Daniel - GTI

GSA Group: 32259

Test	Analysis	Results as Received	Units	Limit of Quantitation
Sample:167877 - 08/26/97 - MC-NO6-2				
8340	Volatiles, TO-14			
	4-Ethyltoluene	ND	ppbv	7
	1,3,5-Trimethylbenzene	ND	ppbv	7
	1,2,4-Trimethylbenzene (Pseudocumen	ND	ppbv	7
	Benzyl chloride	ND	ppbv	7
	1,3-Dichlorobenzene	ND	ppbv	7
	1,4-Dichlorobenzene	ND	ppbv	7
	1,2-Dichlorobenzene	ND	ppbv	7
	1,2,4-Trichlorobenzene	ND	ppbv	7
	Hexachloro-1,3-butadiene	ND	ppbv	7
Sample:167878 - 08/26/97 - VW-1-Inf				
8340	Volatiles, TO-14			
	Dichlorodifluoromethane	ND	ppbv	10
	Chloromethane (Methyl chloride)	ND	ppbv	10
	1,2-Dichlorotetrafluoroethane	ND	ppbv	10
	Vinyl chloride	ND	ppbv	10
	Bromomethane (Methyl bromide)	ND	ppbv	10
	Chloroethane (Ethyl chloride)	ND	ppbv	10
	Trichlorofluoromethane	ND	ppbv	10
	1,1-Dichloroethene	ND	ppbv	10
	Dichloromethane	ND	ppbv	10
	Allyl chloride (3-Chloropropene)	ND	ppbv	10
	1,1,2-Trichloro-1,2,2-trifluoroetha	21	ppbv	10
	1,1-Dichloroethane	680	ppbv	10
	cis-1,2-Dichloroethene	165	ppbv	10
	Chloroform	114	ppbv	10
	1,2-Dichloroethane	123	ppbv	10
	1,1,1-Trichloroethane	55	ppbv	10
	Benzene	ND	ppbv	10
	Carbon tetrachloride	ND	ppbv	10
	1,2-Dichloropropane	ND	ppbv	10
	Trichloroethene	9,930	ppbv	300
	cis-1,3-Dichloropropene	ND	ppbv	10
	trans-1,3-Dichloropropene	ND	ppbv	10
	1,1,2-Trichloroethane	52	ppbv	10
	Toluene	17	ppbv	10
	Ethylene dibromide (EDB)	ND	ppbv	10
	Tetrachloroethene	13,100	ppbv	700
	Chlorobenzene	49	ppbv	10
	Ethylbenzene	ND	ppbv	10
	m,p-Xylene	46	ppbv	10
	Styrene	ND	ppbv	10

ANALYSIS SUMMARY REPORT

Fluor Daniel - GTI

GSA Group: 32259

Test	Analysis	Results as Received	Units	Limit of Quantitation
Sample:167878 - 08/26/97 - VW-1-Inf				
8340	Volatiles, TO-14			
	1,1,2,2-Tetrachloroethane	ND	ppbv	10
	o-Xylene	ND	ppbv	10
	4-Ethyltoluene	46	ppbv	10
	1,3,5-Trimethylbenzene	276	ppbv	10
	1,2,4-Trimethylbenzene (Pseudocumen	227	ppbv	10
	Benzyl chloride	ND	ppbv	10
	1,3-Dichlorobenzene	ND	ppbv	10
	1,4-Dichlorobenzene	ND	ppbv	10
	1,2-Dichlorobenzene	ND	ppbv	10
	1,2,4-Trichlorobenzene	ND	ppbv	10
	Hexachloro-1,3-butadiene	ND	ppbv	10
Sample:167879 - 08/26/97 - VW-1-Eff				
8340	Volatiles, TO-14			
	Dichlorodifluoromethane	ND	ppbv	1
	Chloromethane (Methyl chloride)	ND	ppbv	1
	1,2-Dichlorotetrafluoroethane	ND	ppbv	1
	Vinyl chloride	ND	ppbv	1
	Bromomethane (Methyl bromide)	ND	ppbv	1
	Chloroethane (Ethyl chloride)	ND	ppbv	1
	Trichlorofluoromethane	ND	ppbv	1
	1,1-Dichloroethene	ND	ppbv	1
	Dichloromethane	ND	ppbv	1
	Allyl chloride (3-Chloropropene)	ND	ppbv	1
	1,1,2-Trichloro-1,2,2-trifluoroetha	ND	ppbv	1
	1,1-Dichloroethane	ND	ppbv	1
	cis-1,2-Dichloroethene	ND	ppbv	1
	Chloroform	ND	ppbv	1
	1,2-Dichloroethane	ND	ppbv	1
	1,1,1-Trichloroethane	ND	ppbv	1
	Benzene	ND	ppbv	1
	Carbon tetrachloride	ND	ppbv	1
	1,2-Dichloropropane	ND	ppbv	1
	Trichloroethene	14	ppbv	1
	cis-1,3-Dichloropropene	ND	ppbv	1
	trans-1,3-Dichloropropene	ND	ppbv	1
	1,1,2-Trichloroethane	ND	ppbv	1
	Toluene	ND	ppbv	1
	Ethylene dibromide (EDB)	ND	ppbv	1
	Tetrachloroethene	166	ppbv	10
	Chlorobenzene	ND	ppbv	1
	Ethylbenzene	ND	ppbv	1

ANALYSIS SUMMARY REPORT

Fluor Daniel - GTI

GSA Group: 32259

Test	Analysis	Results as Received	Units	Limit of Quantitation
Sample:167879 - 08/26/97 - VW-1-Eff				
8340	Volatiles, TO-14			
	m,p-Xylene	ND	ppbv	1
	Styrene	ND	ppbv	1
	1,1,2,2-Tetrachloroethane	ND	ppbv	1
	o-Xylene	ND	ppbv	1
	4-Ethyltoluene	ND	ppbv	1
	1,3,5-Trimethylbenzene	ND	ppbv	1
	1,2,4-Trimethylbenzene (Pseudocumen	ND	ppbv	1
	Benzyl chloride	ND	ppbv	1
	1,3-Dichlorobenzene	ND	ppbv	1
	1,4-Dichlorobenzene	ND	ppbv	1
	1,2-Dichlorobenzene	ND	ppbv	1
	1,2,4-Trichlorobenzene	ND	ppbv	1
	Hexachloro-1,3-butadiene	ND	ppbv	1

Test Method Summary:
8340 - EPA AIR TOXICS TO-14

ND - Compound was analyzed but not detected.

Respectfully Submitted,
Reviewed and Approved by:

Randall Wright

Randall Wright
Project Manager

CORE LABORATORIES

Core Laboratories
A N A L Y T I C A L R E P O R T

Job Number: 972164
Prepared For:

Fluor Daniel GTI
Ken Greene
1100 E. University Dr., Ste 116
Tempe, AZ 85281

Date: 10/10/97

Signature

Date: 10/13/97

Name: Tim A. Scott

Core Laboratories
1250 Gene Autry Way
Anaheim, CA 92805

Title: LABORATORY MANAGER

RECEIVED
OCT 21 1997

C.A.E.L.A.P. 1174
L.A.C.S.D. 10146

CORELAB

GULF STATES ANALYTICAL

ANALYSIS SUMMARY REPORT

Core Laboratories
1250 Gene Autry Way
Anaheim, CA 92805

GSA Group: 33224
Date Reported: 10/08/97
Date Received: 10/03/97

Attn: Mr. Charles Munoz
Project: Fluor Daniel GTI

Purchase Order:
Project No.: 972164

Test	Analysis	Results as Received	Units	Limit of Quantitation	Date / Time Analyst
Sample:172867 - 10/01/97 - 972164-1 AS25					
8340	Volatiles, TO-14				
	Dichlorodifluoromethane	ND	ppbv	200	10/06/97 - 20:52 - NG
	Chloromethane (Methyl chloride)	ND	ppbv	200	10/06/97 - 20:52 - NG
	1,2-Dichlorotetrafluoroethane	ND	ppbv	200	10/06/97 - 20:52 - NG
	Vinyl chloride	ND	ppbv	200	10/06/97 - 20:52 - NG
	Bromomethane (Methyl bromide)	ND	ppbv	200	10/06/97 - 20:52 - NG
	Chloroethane (Ethyl chloride)	ND	ppbv	200	10/06/97 - 20:52 - NG
	Trichlorofluoromethane	ND	ppbv	200	10/06/97 - 20:52 - NG
	1,1-Dichloroethene	ND	ppbv	200	10/06/97 - 20:52 - NG
	Dichloromethane	ND	ppbv	200	10/06/97 - 20:52 - NG
	Allyl chloride (3-Chloropropene)	ND	ppbv	200	10/06/97 - 20:52 - NG
	1,1,2-Trichloro-1,2,2-trifluoroetha	ND	ppbv	200	10/06/97 - 20:52 - NG
	1,1-Dichloroethane	1,620	ppbv	200	10/06/97 - 20:52 - NG
	cis-1,2-Dichloroethene	ND	ppbv	200	10/06/97 - 20:52 - NG
	Chloroform	ND	ppbv	200	10/06/97 - 20:52 - NG
	1,2-Dichloroethane	ND	ppbv	200	10/06/97 - 20:52 - NG
	1,1,1-Trichloroethane	ND	ppbv	200	10/06/97 - 20:52 - NG
	Benzene	ND	ppbv	200	10/06/97 - 20:52 - NG
	Carbon tetrachloride	ND	ppbv	200	10/06/97 - 20:52 - NG
	1,2-Dichloropropane	ND	ppbv	200	10/06/97 - 20:52 - NG
	Trichloroethene	7,040	ppbv	200	10/06/97 - 20:52 - NG
	cis-1,3-Dichloropropene	ND	ppbv	200	10/06/97 - 20:52 - NG
	trans-1,3-Dichloropropene	ND	ppbv	200	10/06/97 - 20:52 - NG
	1,1,2-Trichloroethane	ND	ppbv	200	10/06/97 - 20:52 - NG
	Toluene	ND	ppbv	200	10/06/97 - 20:52 - NG
	Ethylene dibromide (EDB)	ND	ppbv	200	10/06/97 - 20:52 - NG
	Tetrachloroethene	30,700	ppbv	6,000	10/06/97 - 19:32 - NG
	Chlorobenzene	ND	ppbv	200	10/06/97 - 20:52 - NG
	Ethylbenzene	ND	ppbv	200	10/06/97 - 20:52 - NG
	m,p-Xylene	ND	ppbv	200	10/06/97 - 20:52 - NG
	Styrene	ND	ppbv	200	10/06/97 - 20:52 - NG
	1,1,2,2-Tetrachloroethane	ND	ppbv	200	10/06/97 - 20:52 - NG
	o-Xylene	ND	ppbv	200	10/06/97 - 20:52 - NG
	4-Ethyltoluene	ND	ppbv	200	10/06/97 - 20:52 - NG
	1,3,5-Trimethylbenzene	ND	ppbv	200	10/06/97 - 20:52 - NG
	1,2,4-Trimethylbenzene (Pseudocumen	ND	ppbv	200	10/06/97 - 20:52 - NG

ANALYSIS SUMMARY REPORT

Core Laboratories GSA Group: 33224

Test	Analysis	Results as Received	Units	Limit of Quantitation	Date / Time Analyst
Sample:172867 - 10/01/97 - 972164-1 AS25					
8340	Volatiles, TO-14				
	Benzyl chloride	ND	ppbv	200	10/06/97 - 20:52 - [illegible]
	1,3-Dichlorobenzene	ND	ppbv	200	10/06/97 - 20:52 - [illegible]
	1,4-Dichlorobenzene	ND	ppbv	200	10/06/97 - 20:52 - [illegible]
	1,2-Dichlorobenzene	ND	ppbv	200	10/06/97 - 20:52 - [illegible]
	1,2,4-Trichlorobenzene	ND	ppbv	200	10/06/97 - 20:52 - [illegible]
	Hexachloro-1,3-butadiene	ND	ppbv	200	10/06/97 - 20:52 - [illegible]
Sample:172868 - 10/01/97 - 972164-2 AS50					
8340	Volatiles, TO-14				
	Dichlorodifluoromethane	ND	ppbv	700	10/06/97 - 20:11 - [illegible]
	Chloromethane (Methyl chloride)	ND	ppbv	700	10/06/97 - 20:11 - [illegible]
	1,2-Dichlorotetrafluoroethane	ND	ppbv	700	10/06/97 - 20:11 - [illegible]
	Vinyl chloride	ND	ppbv	700	10/06/97 - 20:11 - [illegible]
	Bromomethane (Methyl bromide)	ND	ppbv	700	10/06/97 - 20:11 - [illegible]
	Chloroethane (Ethyl chloride)	ND	ppbv	700	10/06/97 - 20:11 - [illegible]
	Trichlorofluoromethane	ND	ppbv	700	10/06/97 - 20:11 - [illegible]
	1,1-Dichloroethene	ND	ppbv	700	10/06/97 - 20:11 - [illegible]
	Dichloromethane	ND	ppbv	700	10/06/97 - 20:11 - [illegible]
	Allyl chloride (3-Chloropropene)	ND	ppbv	700	10/06/97 - 20:11 - [illegible]
	1,1,2-Trichloro-1,2,2-trifluoroetha	ND	ppbv	700	10/06/97 - 20:11 - [illegible]
	1,1-Dichloroethane	7,710	ppbv	700	10/06/97 - 20:11 - [illegible]
	cis-1,2-Dichloroethene	5,130	ppbv	700	10/06/97 - 20:11 - [illegible]
	Chloroform	ND	ppbv	700	10/06/97 - 20:11 - [illegible]
	1,2-Dichloroethane	ND	ppbv	700	10/06/97 - 20:11 - [illegible]
	1,1,1-Trichloroethane	ND	ppbv	700	10/06/97 - 20:11 - [illegible]
	Benzene	ND	ppbv	700	10/06/97 - 20:11 - [illegible]
	Carbon tetrachloride	ND	ppbv	700	10/06/97 - 20:11 - [illegible]
	1,2-Dichloropropane	ND	ppbv	700	10/06/97 - 20:11 - [illegible]
	Trichloroethene	25,100	ppbv	700	10/06/97 - 20:11 - [illegible]
	cis-1,3-Dichloropropene	ND	ppbv	700	10/06/97 - 20:11 - [illegible]
	trans-1,3-Dichloropropene	ND	ppbv	700	10/06/97 - 20:11 - [illegible]
	1,1,2-Trichloroethane	ND	ppbv	700	10/06/97 - 20:11 - [illegible]
	Toluene	ND	ppbv	700	10/06/97 - 20:11 - [illegible]
	Ethylene dibromide (EDB)	ND	ppbv	700	10/06/97 - 20:11 - [illegible]
	Tetrachloroethene	249,000	ppbv	7,000	10/06/97 - 22:54 - [illegible]
	Chlorobenzene	ND	ppbv	700	10/06/97 - 20:11 - [illegible]
	Ethylbenzene	ND	ppbv	700	10/06/97 - 20:11 - [illegible]
	m,p-Xylene	ND	ppbv	700	10/06/97 - 20:11 - [illegible]
	Styrene	ND	ppbv	700	10/06/97 - 20:11 - [illegible]
	1,1,2,2-Tetrachloroethane	ND	ppbv	700	10/06/97 - 20:11 - [illegible]
	o-Xylene	ND	ppbv	700	10/06/97 - 20:11 - [illegible]
	4-Ethyltoluene	ND	ppbv	700	10/06/97 - 20:11 - [illegible]

ANALYSIS SUMMARY REPORT

Core Laboratories

GSA Group: 33224

Test	Analysis	Results as Received	Units	Limit of Quantitation	Date / Time Analyst
Sample:172868 - 10/01/97 - 972164-2 AS50					
8340	Volatiles, TO-14				
	1,3,5-Trimethylbenzene	ND	ppbv	700	10/06/97 - 20:11 - [illegible]
	1,2,4-Trimethylbenzene (Pseudocumen	ND	ppbv	700	10/06/97 - 20:11 - [illegible]
	Benzyl chloride	ND	ppbv	700	10/06/97 - 20:11 - [illegible]
	1,3-Dichlorobenzene	ND	ppbv	700	10/06/97 - 20:11 - [illegible]
	1,4-Dichlorobenzene	ND	ppbv	700	10/06/97 - 20:11 - [illegible]
	1,2-Dichlorobenzene	ND	ppbv	700	10/06/97 - 20:11 - [illegible]
	1,2,4-Trichlorobenzene	ND	ppbv	700	10/06/97 - 20:11 - [illegible]
	Hexachloro-1,3-butadiene	ND	ppbv	700	10/06/97 - 20:11 - [illegible]

Test Method Summary:
8340 - EPA AIR TOXICS TO-14

ND - Compound was analyzed but not detected.

Respectfully Submitted,
Reviewed and Approved by:

Randall Wright

Randall Wright
Project Manager

Core Lab-Gulf States Analytical
Daily QC Batching Data
Data Released for Reporting

10/08/97
09:40:15
Group: 3322

Analysis Batch Number: 8340 -10/06/97-1008-1
Test Identification : 8340 -Volatiles, TO-14 Units: ppbv Sequence: 100697.bQ
Number of Samples : 7
Batch Data-Date/Time : 10/07/97 / 13:00:27

BLANK#	ANALYTE	CONC FOUND #	LMT OF QUANTITATION
BLANK-10/06	4-Ethyltoluene	1.4900(M)	1.0000
	1,3,5-Trimethylbenzene	1.1800(M)	1.0000
BLANK-10/06-2	none detected		

CONTROL SAMPLE#	ANALYTE	CONC FOUND	CONC KNOWN	% REC #	QC LIMITS LOWER	QC LIMITS UPPER
LCS-10/06	Dichlorodifluoromethane	9.9300	10.0000	99.3	78.2	126.8
	Chloromethane (Methyl chloride)	9.8800	10.0000	98.8	72.1	128.4
	1,2-Dichlorotetrafluoroethane	8.3200	10.0000	83.2	74.3	131.0
	Vinyl chloride	8.8800	10.0000	88.8	74.0	131.7
	Bromomethane (Methyl bromide)	8.9900	10.0000	89.9	79.2	127.0
	Chloroethane (Ethyl chloride)	8.4100	10.0000	84.1	75.4	132.2
	Trichlorofluoromethane	7.1600	10.0000	71.6(A1)	77.8	135.4
	1,1-Dichloroethene	7.0500	10.0000	70.5(A1)	71.9	143.2
	Dichloromethane	8.6600	10.0000	86.6	77.1	134.1
	Allyl chloride (3-Chloropropene)	12.1600	10.0000	121.6	76.5	129.5
	1,1,2-Trichloro-1,2,2-trifluoroetha	8.4800	10.0000	84.8	77.8	143.3
	1,1-Dichloroethane	8.5300	10.0000	85.3	66.5	159.0
	cis-1,2-Dichloroethene	8.9400	10.0000	89.4	78.1	140.9
	Chloroform	9.5000	10.0000	95.0	77.3	135.9
	1,2-Dichloroethane	9.6800	10.0000	96.8	72.2	148.7
	1,1,1-Trichloroethane	9.1500	10.0000	91.5	73.6	140.3
	Benzene	9.8500	10.0000	98.5	76.5	137.9
	Carbon tetrachloride	8.4900	10.0000	84.9	76.0	136.6
	1,2-Dichloropropane	9.0500	10.0000	90.5	77.6	134.8
	Trichloroethene	9.1600	10.0000	91.6	77.6	135.3
	cis-1,3-Dichloropropene	12.0200	10.0000	120.2	53.3	192.3
	trans-1,3-Dichloropropene	11.5300	10.0000	115.3	34.2	224.1
	1,1,2-Trichloroethane	9.5300	10.0000	95.3	79.4	134.9
	Toluene	10.0000	10.0000	100.0	78.2	139.2
	Ethylene dibromide (EDB)	9.5600	10.0000	95.6	79.0	135.0
	Tetrachloroethene	9.8100	10.0000	98.1	76.7	140.4
	Chlorobenzene	9.1300	10.0000	91.3	78.4	138.9
	Ethylbenzene	9.6500	10.0000	96.5	79.5	136.4
	m,p-Xylene	18.3500	20.0000	91.8	72.7	147.7
	Styrene	9.9700	10.0000	99.7	39.6	129.4
	1,1,2,2-Tetrachloroethane	8.8700	10.0000	88.7	77.2	138.0
	o-Xylene	9.5200	10.0000	95.2	68.1	152.1
	4-Ethyltoluene	21.1900	10.0000	211.9(A1)	49.1	162.8
	1,3,5-Trimethylbenzene	8.2700	10.0000	82.7	50.5	205.1
	1,2,4-Trimethylbenzene (Pseudocumen	8.8600	10.0000	88.6	46.0	221.8
	Benzyl chloride	31.1600	10.0000	311.6(A1)	10.0	160.0
	1,3-Dichlorobenzene	8.9200	10.0000	89.2	74.8	145.0
	1,4-Dichlorobenzene	8.0200	10.0000	80.2	73.5	146.9
	1,2-Dichlorobenzene	8.8100	10.0000	88.1	70.4	154.8
	1,2,4-Trichlorobenzene	8.9200	10.0000	89.2	14.0	202.5
	Hexachloro-1,3-butadiene	10.4800	10.0000	104.8	27.4	191.2

Core Lab-Gulf States Analytical
Daily QC Batching Data
Data Released for Reporting

10/08/97
09:40:17
Group: 33224

Analysis Batch Number: 8340 -10/06/97-1008-1
Test Identification : 8340 -Volatiles, TO-14 Units: ppbv Sequence: 100697.bQ
Number of Samples : 7
Batch Data-Date/Time : 10/07/97 / 13:00:27

SURG #:65-8340 -A-SU

SAMPLE#	BFB #
SAMPLE 33224-172867	86
SAMPLE 33224-172868	86
SAMPLE 33224-172867	84
SAMPLE 33224-172868	86
SAMPLE 33224-172867	85
SAMPLE 33224-172868	90
SAMPLE 33236-172955	85
BLK 1 BLANK-10/06	113
BLK 2 BLANK-10/06	86
CTL 1 LCS-10/06	89

65-8340 -A-SU - VOLATILE AIR SURROGATE		QC LIMITS	
SRG ABRV =	SURROGATE DESCRIPTION	LOWER	UPPER
BFB	p-Bromofluorobenzene	71.3	139.6

---------- Result Footnotes ----------
(M) - QC Sample Was Reanalyzed
(A1) - Method acceptance limit not defined.

Groups & Samples

33224-172867 33224-172868 33236-172955

CORE LABORATORIES

QUALITY ASSURANCE FOOTER

METHOD REFERENCES

(1) EPA SW-846, Test Methods for Evaluating Solid Waste, Third Edition, September 1986, and Updates I, II, IIA, IIB, and III
(2) Standard Methods for the Examination of Water and Wastewater, 18th Edition, 1992
(3) EPA 600/4-79-020, Methods of Chemical Analysis for Waters and Wastes, March 1983
(4) Federal Register, Friday, October 26, 1984 (40 CFR Part 136)
(5) American Society for Testing and Materials, Volumes 5.01, 5.02, 5.03, 1992
(6) EPA 600/4-89-001, Short-term Methods for Estimating the Chronic Toxicity of Effluents and Receiving Waters to Fresh Water Organisms
(7) EPA 600/4-90-027, Methods for Measuring the Acute Toxicity of Effluent and Receiving Waters to Fresh Water and Marine Organisms, Fourth Edition

COMMENTS

All methods of chemical analysis have a statistical uncertainty associated with the results. Unless otherwise indicated, the data in this report are within the limits of uncertainty as specified in the referenced method. Quality control acceptance criteria are based either on limits specified in the referenced method or on actual laboratory performance. The date and time of analysis indicated on the QC report may not reflect the actual time of analysis for QC samples. Data reported in the QA report may be lower than sample data due to dilution of samples into the calibration range of the analysis. Sample concentrations for solid samples are calculated on an as received (wet) basis unless otherwise indicated. Unless otherwise indicated, volatiles by gas chromatography (GC) are reported from a single column. Volatiles analyses by GC on low level soils are conducted at room temperature. TCLP extractions are performed at sample amounts, approved by the State of California.

FLAGS, FOOTNOTES, AND ABBREVIATIONS (as needed)

NA = Not analyzed
N/A = Not applicable
ug/L = Micrograms per liter
mg/L = Milligrams per liter
N.I. = Not Ignitable
S.I. = Sustains Ignition
I(NS) = Ignites, but does not Sustain Ignition
RPD = Relative Percent Difference
ND = Not detected at a value greater than the reporting limit
NC = Not calculable due to values lower than the detection limit
(a) = Surrogate recoveries were outside acceptable ranges due to matrix effects.
(b) = Surrogate recoveries were not calculated due to dilution of the sample below the detectable range for the surrogate.
(c) = Matrix spike recoveries were outside acceptable ranges due to matrix effects.
(d) = Relative Percent Difference (RPD) for duplicate analysis outside acceptance limits due to actual differences in the sample matrix.
(e) = The limit listed for flammability indicates the upper limit for the test. Samples are not tested at temperatures above 140 Fahrenheit since only samples which will sustain ignition at temperatures below 140 are considered flammable.
(f) = Results for this hydrocarbon range did not match a typical hydrocarbon pattern. Results were quantified using a diesel standard, however, the hydrocarbon pattern did not match a diesel pattern.
(g) = Results for this hydrocarbon range did not match a typical hydrocarbon pattern. Results were quantified using a gasoline standard, however, the hydrocarbon pattern did not match a gasoline pattern.
(h) = High dilution due to matrix effects

QC SAMPLE IDENTIFICATIONS

MB = Method Blank
RB = Reagent Blank
ICB = Initial Calibration Blank
CCB = Continuing Calibration Blank
CS = Calibration Standard
ICV = Initial Calibration Verification
CCV = Continuing Calibration Verification
SB = Storage Blank
MS = Matrix Spike
MSD = Matrix Spike Duplicate
MD = Matrix Duplicate
BS = Blank Spike
SS = Surrogate Spike
LCS = Laboratory Control Standard
RS = Reference Standard

SUBCONTRACTED LABORATORY LOCATIONS

Core Laboratories:	Aurora, Colorado	*AU
	Casper, Wyoming	*CA
	Corpus Christi, Texas	*CC
	Edison, New Jersey	*ED
	Houston, Texas (Env)	*HE
	Houston, Texas (Pet)	*HP
	Indianapolis, Indiana	*IN
	Lake Charles, Louisiana	*LC
	Long Beach, California	*LB
	Valparaiso, Indiana	*VP
	Bakersfield, California	*BK

1250 Gene Autry Way Autry Way
Anaheim, CA 92805
(714) 937-1094 /u/matt/logs_n_forms/footer.form

The analytical results, opinions or interpretations contained in this report are based upon information and material supplied by the client for whose exclusive and confidential use this report has been made. The analytical results, opinions or interpretations expressed represent the best judgment of Core Laboratories. Core Laboratories, however, makes no warranty or representation, express or implied, of any type, and expressly disclaims same as to the productivity, proper operations or profitableness of any oil, gas, coal or other mineral, property, well or sand in connection with which such report is used or relied upon for any reason whatsoever. This report shall not be reproduced, in whole or in part, without the written approval of Core Laboratories

CORELAB

CORE LABORATORIES, INC.

NO. 095924

CHAIN OF CUSTODY RECORD

CUSTOMER INFORMATION	PROJECT INFORMATION
COMPANY: Fluor Daniel GTI	PROJECT NAME/NUMBER: 320 W. Lincoln / 0233000635
SEND REPORT TO: KEN GREENE	BILLING INFORMATION
ADDRESS: 1100 E. University #116, Tempe, AZ 85281	BILL TO:
	ADDRESS:
	State of AZ rates apply
PHONE: (602) 966-0808	PHONE:
FAX: (602) 894-0955	FAX: PO NO.:

LAB JOB NO. 972164

SAMPLE NO.	SAMPLE DESCRIPTION	SAMPLE DATE	SAMPLE TIME	SAMPLE MATRIX	CONTAINER	PRESERV.	NUMBER OF CONTAINERS	ANALYSIS / METHOD REQUEST: TO14								REMARKS / PRECAUTIONS
	AS25	10.1.97	1330	AIR	Zumer	None	1	X								
	AS50	10.1.97	1335	AIR	Zumer	None	1	X								

SAMPLER: DEREK FOEHR

SHIPMENT METHOD: FEDEX

AIRBILL NO.: 5424337026

REQUIRED TURNAROUND:* ☐ SAME DAY ☐ 24 HOURS ☐ 48 HOURS ☐ 72 HOURS ☐ 5 DAYS ☐ 10 DAYS ☒ ROUTINE OTHER

1. RELINQUISHED BY:	DATE	2. RELINQUISHED BY:	DATE	3. RELINQUISHED BY:	DATE
SIGNATURE:	10.1.97	SIGNATURE:		SIGNATURE:	
PRINTED NAME/COMPANY: DEREK FOEHR / Fluor Daniel GTI	TIME 1430	PRINTED NAME/COMPANY:	TIME	PRINTED NAME/COMPANY:	TIME
1. RECEIVED BY:	DATE	2. RECEIVED BY:	DATE	3. RECEIVED BY:	DATE
SIGNATURE:	10/2/97	SIGNATURE:		SIGNATURE:	
PRINTED NAME/COMPANY: Aris Bu / Core	TIME 1100	PRINTED NAME/COMPANY:	TIME	PRINTED NAME/COMPANY:	TIME

* RUSH TURNAROUND MAY REQUIRE SURCHARGE

☒ **Anaheim, CA** 1250 E. Gene Autry Way, Anaheim, CA 92805, (714) 937-1094 Fax (714) 937-1170

☐ **Aurora, CO** 10703 E. Bethany Drive, Aurora, CO 80014, (303) 751-1780 Fax (303) 751-1784

☐ **Casper, WY** 420 W. First Street, Casper, WY 82601, (307) 235-5741 Fax (307) 266-1676

☐ **Corpus Christi, TX** 1733 N. Padre Island Drive, Corpus Christi, TX 78408, (512) 289-2673 Fax (512) 289-2471

☐ **Edison, NJ** 284 Raritan Center Parkway, Edison, NJ 08837, (908) 225-6700 Fax (908) 225-6777

☐ **Houston, TX (Env)** 6310 Rothway Drive, Houston, TX 77040, (713) 690-4444 Fax (713) 690-5646

☐ **Houston, TX (Pet)** 8210 Mosley Road, Houston, TX 77075, (713) 943-9776 Fax (713) 943-3846

☐ **Indianapolis, IN** 7726 Moller Road, Indianapolis, IN 46268, (317) 875-5894 Fax (317) 872-6189

☐ **Lake Charles, LA** 3645 Beglis Parkway, Sulphur, LA 70663, (318) 583-4926 Fax (318) 583-4929

☐ **Long Beach, CA** 3700 Cherry Avenue, Long Beach, CA 90807, (310) 595-8401 Fax (310) 427-5174

☐ **Tampa, FL** 5460 Beaumont Center Blvd., Tampa, FL 33634, (813)884-8268 Fax (813) 885-4938

☐ **Valparaiso, IN** 2400 Cumberland Drive, Valparaiso, IN 46383, (219) 464-2389 Fax (219) 462-2953

ORIGINAL

CORELAB

GULF STATES ANALYTICAL

03/31/98

Mr. Ken Greene
Fluor Daniel - GTI
1100 E. University Drive
Suite 116
Tempe, AZ 85281

COPY

Reference:
Project: MCRM (320 W.Lincoln)
Project No.: 023300635
Date Received: 03/19/98
GSA Group: 37286 Group Report Date: 03/31/98

Dear Mr. Greene:

Enclosed are the analytical results for your above referenced project. The following samples are included in the report.

MC N06-50 :192827 MC N06-25 :192828 VW-01 :192829
MC-BD :192830

All holding times were met for the tests performed on these samples.

Our A2LA accreditation requires that, should this report be reproduced, it must be reproduced in total.

Enclosed please find the Quality Control Summary. All quality control results for the QC batch that are applicable to this sample(s) are acceptable except as noted in the QC batch reports.

If the report is acceptable, please approve the enclosed invoice and forward it for payment.

Thank you for selecting Core Lab - Gulf States Analytical to serve as your analytical laboratory on this project. If you have any questions concerning these results, please feel free to contact me at any time.

We look forward to working with you on future projects.

Sincerely yours,

Randall Wright
Project Manager

Enclosure

RECEIVED
APR 06 1998
FLUORDANIEL GTI
TEMPE, ARIZONA

Core Laboratories, Inc.
6310 Rothway, Houston, Texas 77040, (713) 690-4444, Fax (713) 690-5646

CORELAB

GULF STATES ANALYTICAL

ANALYSIS SUMMARY REPORT

Fluor Daniel - GTI
1100 E. University Drive
Suite 116
Tempe, AZ 85281

GSA Group: 37286
Date Reported: 03/31/98
Date Received: 03/19/98

Attn: Mr. Ken Greene
Project: MCRM (320 W.Lincoln)

Purchase Order: 397623
Project No.: 023300635

Test	Analysis	Results as Received	Units	Limit of Quantitation
Sample:192827 - 03/17/98 - MC N06-50				
8340	Volatiles, TO-14			
	Dichlorodifluoromethane	ND	ppbv	10
	Chloromethane (Methyl chloride)	ND	ppbv	10
	1,2-Dichlorotetrafluoroethane	ND	ppbv	10
	Vinyl chloride	ND	ppbv	10
	Bromomethane (Methyl bromide)	ND	ppbv	10
	Chloroethane (Ethyl chloride)	ND	ppbv	10
	Trichlorofluoromethane	ND	ppbv	10
	1,1-Dichloroethene	ND	ppbv	10
	Dichloromethane	ND	ppbv	10
	Allyl chloride (3-Chloropropene)	ND	ppbv	10
	1,1,2-Trichloro-1,2,2-trifluoroetha	196	ppbv	10
	1,1-Dichloroethane	71,600	ppbv	3,000
	cis-1,2-Dichloroethene	419	ppbv	10
	Chloroform	ND	ppbv	10
	1,2-Dichloroethane	ND	ppbv	10
	1,1,1-Trichloroethane	8,690	ppbv	3,000
	Benzene	27	ppbv	10
	Carbon tetrachloride	ND	ppbv	10
	1,2-Dichloropropane	ND	ppbv	10
	Trichloroethene	97,600	ppbv	3,000
	cis-1,3-Dichloropropene	ND	ppbv	10
	trans-1,3-Dichloropropene	ND	ppbv	10
	1,1,2-Trichloroethane	ND	ppbv	10
	Toluene	ND	ppbv	10
	Ethylene dibromide (EDB)	ND	ppbv	10
	Tetrachloroethene	78,400	ppbv	10,000
	Chlorobenzene	126	ppbv	10
	Ethylbenzene	ND	ppbv	10
	m,p-Xylene	ND	ppbv	10
	Styrene	ND	ppbv	10
	1,1,2,2-Tetrachloroethane	ND	ppbv	10
	o-Xylene	ND	ppbv	10
	4-Ethyltoluene	ND	ppbv	10
	1,3,5-Trimethylbenzene	ND	ppbv	10

CORELAB

GULF STATES ANALYTICAL

ANALYSIS SUMMARY REPORT

Fluor Daniel - GTI

GSA Group: 37286

Test	Analysis	Results as Received	Units	Limit of Quantitation
Sample:192827 - 03/17/98 - MC N06-50				
8340	Volatiles, TO-14			
	1,2,4-Trimethylbenzene (Pseudocumen	ND	ppbv	10
	Benzyl chloride	ND	ppbv	10
	1,3-Dichlorobenzene	ND	ppbv	10
	1,4-Dichlorobenzene	ND	ppbv	10
	1,2-Dichlorobenzene	ND	ppbv	10
	1,2,4-Trichlorobenzene	ND	ppbv	10
	Hexachloro-1,3-butadiene	ND	ppbv	10
Sample:192828 - 03/17/98 - MC N06-25				
8340	Volatiles, TO-14			
	Dichlorodifluoromethane	ND	ppbv	20
	Chloromethane (Methyl chloride)	ND	ppbv	20
	1,2-Dichlorotetrafluoroethane	ND	ppbv	20
	Vinyl chloride	ND	ppbv	20
	Bromomethane (Methyl bromide)	ND	ppbv	20
	Chloroethane (Ethyl chloride)	ND	ppbv	20
	Trichlorofluoromethane	ND	ppbv	20
	1,1-Dichloroethene	ND	ppbv	20
	Dichloromethane	ND	ppbv	20
	Allyl chloride (3-Chloropropene)	ND	ppbv	20
	1,1,2-Trichloro-1,2,2-trifluoroetha	65	ppbv	20
	1,1-Dichloroethane	3,720	ppbv	600
	cis-1,2-Dichloroethene	57	ppbv	20
	Chloroform	51	ppbv	20
	1,2-Dichloroethane	ND	ppbv	20
	1,1,1-Trichloroethane	198	ppbv	20
	Benzene	ND	ppbv	20
	Carbon tetrachloride	ND	ppbv	20
	1,2-Dichloropropane	ND	ppbv	20
	Trichloroethene	6,360	ppbv	600
	cis-1,3-Dichloropropene	ND	ppbv	20
	trans-1,3-Dichloropropene	ND	ppbv	20
	1,1,2-Trichloroethane	ND	ppbv	20
	Toluene	ND	ppbv	20
	Ethylene dibromide (EDB)	ND	ppbv	20
	Tetrachloroethene	12,700	ppbv	600
	Chlorobenzene	ND	ppbv	20
	Ethylbenzene	ND	ppbv	20

The analytical results, opinions or interpretations contained in this report are based upon information and material supplied by the client for whose exclusive and confidential use this report has been made. The analytical results, opinions or interpretations expressed represent the best judgment of Core Laboratories. Core Laboratories, however, makes no warranty or representation, express or implied, of any type, and expressly disclaims same as to the productivity, proper operations or profitableness of any oil, gas, coal or other mineral, property, well or sand in connection with which such report is used or relied upon for any reason whatsoever. This report shall not be reproduced, in whole or in part, without the written approval of Core Laboratories.

CORELAB

GULF STATES ANALYTICAL

ANALYSIS SUMMARY REPORT

Fluor Daniel - GTI

GSA Group: 37286

Test	Analysis	Results as Received	Units	Limit of Quantitation
Sample:192828 - 03/17/98 - MC N06-25				
8340	Volatiles, TO-14			
	m,p-Xylene	ND	ppbv	20
	Styrene	ND	ppbv	20
	1,1,2,2-Tetrachloroethane	ND	ppbv	20
	o-Xylene	ND	ppbv	20
	4-Ethyltoluene	ND	ppbv	20
	1,3,5-Trimethylbenzene	ND	ppbv	20
	1,2,4-Trimethylbenzene (Pseudocumen	ND	ppbv	20
	Benzyl chloride	ND	ppbv	20
	1,3-Dichlorobenzene	ND	ppbv	20
	1,4-Dichlorobenzene	ND	ppbv	20
	1,2-Dichlorobenzene	ND	ppbv	20
	1,2,4-Trichlorobenzene	ND	ppbv	20
	Hexachloro-1,3-butadiene	ND	ppbv	20
Sample:192829 - 03/17/98 - VW-01				
8340	Volatiles, TO-14			
	Dichlorodifluoromethane	ND	ppbv	10
	Chloromethane (Methyl chloride)	ND	ppbv	10
	1,2-Dichlorotetrafluoroethane	ND	ppbv	10
	Vinyl chloride	ND	ppbv	10
	Bromomethane (Methyl bromide)	ND	ppbv	10
	Chloroethane (Ethyl chloride)	ND	ppbv	10
	Trichlorofluoromethane	ND	ppbv	10
	1,1-Dichloroethene	ND	ppbv	10
	Dichloromethane	ND	ppbv	10
	Allyl chloride (3-Chloropropene)	ND	ppbv	10
	1,1,2-Trichloro-1,2,2-trifluoroetha	142	ppbv	10
	1,1-Dichloroethane	9,910	ppbv	3,000
	cis-1,2-Dichloroethene	68	ppbv	10
	Chloroform	105	ppbv	10
	1,2-Dichloroethane	ND	ppbv	10
	1,1,1-Trichloroethane	341	ppbv	10
	Benzene	ND	ppbv	10
	Carbon tetrachloride	ND	ppbv	10
	1,2-Dichloropropane	ND	ppbv	10
	Trichloroethene	27,800	ppbv	3,000
	cis-1,3-Dichloropropene	ND	ppbv	10
	trans-1,3-Dichloropropene	ND	ppbv	10

The analytical results, opinions or interpretations contained in this report are based upon information and material supplied by the client for whose exclusive and confidential use this report has been made. The analytical results, opinions or interpretations expressed represent the best judgment of Core Laboratories. Core Laboratories, however, makes no warranty or representation, express or implied, of any type, and expressly disclaims same as to the productivity, proper operations or profitableness of any oil, gas, coal or other mineral, property, well or sand in connection with which such report is used or relied upon for any reason whatsoever. This report shall not be reproduced, in whole or in part, without the written approval of Core Laboratories.

CORELAB

GULF STATES ANALYTICAL

ANALYSIS SUMMARY REPORT

Fluor Daniel - GTI

GSA Group: 37286

Test	Analysis	Results as Received	Units	Limit of Quantitation
Sample:192829 - 03/17/98 - VW-01				
8340	Volatiles, TO-14			
	1,1,2-Trichloroethane	45	ppbv	10
	Toluene	ND	ppbv	10
	Ethylene dibromide (EDB)	ND	ppbv	10
	Tetrachloroethene	36,400	ppbv	3,000
	Chlorobenzene	ND	ppbv	10
	Ethylbenzene	ND	ppbv	10
	m,p-Xylene	ND	ppbv	10
	Styrene	ND	ppbv	10
	1,1,2,2-Tetrachloroethane	ND	ppbv	10
	o-Xylene	ND	ppbv	10
	4-Ethyltoluene	ND	ppbv	10
	1,3,5-Trimethylbenzene	ND	ppbv	10
	1,2,4-Trimethylbenzene (Pseudocumen	ND	ppbv	10
	Benzyl chloride	ND	ppbv	10
	1,3-Dichlorobenzene	ND	ppbv	10
	1,4-Dichlorobenzene	ND	ppbv	10
	1,2-Dichlorobenzene	ND	ppbv	10
	1,2,4-Trichlorobenzene	ND	ppbv	10
	Hexachloro-1,3-butadiene	ND	ppbv	10
Sample:192830 - 03/17/98 - MC-BD				
8340	Volatiles, TO-14			
	Dichlorodifluoromethane	ND	ppbv	10
	Chloromethane (Methyl chloride)	ND	ppbv	10
	1,2-Dichlorotetrafluoroethane	ND	ppbv	10
	Vinyl chloride	ND	ppbv	10
	Bromomethane (Methyl bromide)	ND	ppbv	10
	Chloroethane (Ethyl chloride)	ND	ppbv	10
	Trichlorofluoromethane	ND	ppbv	10
	1,1-Dichloroethene	ND	ppbv	10
	Dichloromethane	ND	ppbv	10
	Allyl chloride (3-Chloropropene)	ND	ppbv	10
	1,1,2-Trichloro-1,2,2-trifluoroetha	40	ppbv	10
	1,1-Dichloroethane	8,880	ppbv	3,000
	cis-1,2-Dichloroethene	76	ppbv	10
	Chloroform	109	ppbv	10
	1,2-Dichloroethane	ND	ppbv	10
	1,1,1-Trichloroethane	418	ppbv	10

The analytical results, opinions or interpretations contained in this report are based upon information and material supplied by the client for whose exclusive and confidential use this report has been made. The analytical results, opinions or interpretations expressed represent the best judgment of Core Laboratories. Core Laboratories, however, makes no warranty or representation, express or implied, of any kind, and expressly disclaims same as to the productivity, proper operations or profitableness of any oil, gas, coal or other mineral, property, well or sand in connection with which such report is used or relied upon for any reason whatsoever. This report may not be reproduced, in whole or in part, without the written approval of Core Laboratories.

CORELAB

GULF STATES ANALYTICAL

ANALYSIS SUMMARY REPORT

GSA Group: 37286

Fluor Daniel - GTI

Test	Analysis	Results as Received	Units	Limit of Quantitation
Sample:192830 - 03/17/98 - MC-BD				
8340	Volatiles, TO-14			
	Benzene	ND	ppbv	10
	Carbon tetrachloride	ND	ppbv	10
	1,2-Dichloropropane	ND	ppbv	10
	Trichloroethene	28,700	ppbv	3,000
	cis-1,3-Dichloropropene	ND	ppbv	10
	trans-1,3-Dichloropropene	ND	ppbv	10
	1,1,2-Trichloroethane	40	ppbv	10
	Toluene	ND	ppbv	10
	Ethylene dibromide (EDB)	ND	ppbv	10
	Tetrachloroethene	36,700	ppbv	3,000
	Chlorobenzene	ND	ppbv	10
	Ethylbenzene	ND	ppbv	10
	m,p-Xylene	ND	ppbv	10
	Styrene	ND	ppbv	10
	1,1,2,2-Tetrachloroethane	ND	ppbv	10
	o-Xylene	ND	ppbv	10
	4-Ethyltoluene	ND	ppbv	10
	1,3,5-Trimethylbenzene	ND	ppbv	10
	1,2,4-Trimethylbenzene (Pseudocumen	ND	ppbv	10
	Benzyl chloride	ND	ppbv	10
	1,3-Dichlorobenzene	ND	ppbv	10
	1,4-Dichlorobenzene	ND	ppbv	10
	1,2-Dichlorobenzene	ND	ppbv	10
	1,2,4-Trichlorobenzene	ND	ppbv	10
	Hexachloro-1,3-butadiene	ND	ppbv	10

Test Method Summary:
8340 - EPA AIR TOXICS TO-14

ND - Compound was analyzed but not detected.

Respectfully Submitted,
Reviewed and Approved by:

for Randall Wright
Project Manager

The analytical results, opinions or interpretations contained in this report are based upon information and material supplied by the client for whose exclusive and confidential use this report has been made. The analytical results, opinions or interpretations expressed represent the best judgment of Core Laboratories. Core Laboratories, however, makes no warranty or representation, express or implied, of any type, and expressly disclaims same as to the productivity, proper operations or profitableness of any oil, gas, coal or other mineral, property, well or sand in connection with which such report is used or relied upon for any reason whatsoever. This report shall not be reproduced, in whole or in part, without the written approval of Core Laboratories.

Core Lab-Gulf States Analytical
Daily QC Batching Data
Data Released for Reporting

03/31/98
08:03:14
Group: 37286

Analysis Batch Number: 8340 -03/24/98-1094-1
Test Identification : 8340 -Volatiles, TO-14 Units: ppbv Sequence: 032498.bQ
Number of Samples : 10
Batch Data-Date/Time : 03/28/98 / 13:29:17

BLANK#	ANALYTE	CONC FOUND #	LMT OF QUANTITATION
VBLK-032498	1,2,4-Trichlorobenzene	1.2300(P)	1.0000

CONTROL SAMPLE#	ANALYTE	CONC FOUND	CONC KNOWN	% REC #	QC LIMITS LOWER	QC LIMITS UPPER
LCS-03248	Dichlorodifluoromethane	8.9800	10.0000	89.8	78.2	126.8
	Chloromethane (Methyl chloride)	9.7300	10.0000	97.3	72.1	128.4
	1,2-Dichlorotetrafluoroethane	11.8600	10.0000	118.6	74.3	131.0
	Vinyl chloride	10.0000	10.0000	100.0	74.0	131.7
	Bromomethane (Methyl bromide)	10.9800	10.0000	109.8	79.2	127.0
	Chloroethane (Ethyl chloride)	11.1500	10.0000	111.5	75.4	132.2
	Trichlorofluoromethane	12.3800	10.0000	123.8	77.8	135.4
	1,1-Dichloroethene	12.1700	10.0000	121.7	71.9	143.2
	Dichloromethane	10.7800	10.0000	107.8	77.1	134.1
	Allyl chloride (3-Chloropropene)	10.8100	10.0000	108.1	76.5	129.5
	1,1,2-Trichloro-1,2,2-trifluoroetha	10.6800	10.0000	106.8	77.8	143.3
	1,1-Dichloroethane	10.1600	10.0000	101.6	66.5	159.0
	cis-1,2-Dichloroethene	9.9900	10.0000	99.9	78.1	140.9
	Chloroform	9.7200	10.0000	97.2	77.3	135.9
	1,2-Dichloroethane	9.8200	10.0000	98.2	72.2	148.7
	1,1,1-Trichloroethane	9.9600	10.0000	99.6	73.6	140.3
	Benzene	9.9200	10.0000	99.2	76.5	137.9
	Carbon tetrachloride	10.3400	10.0000	103.4	76.0	136.6
	1,2-Dichloropropane	9.9800	10.0000	99.8	77.6	134.8
	Trichloroethene	10.1700	10.0000	101.7	77.6	135.3
	cis-1,3-Dichloropropene	9.9000	10.0000	99.0	53.3	192.3
	trans-1,3-Dichloropropene	9.7200	10.0000	97.2	34.2	224.1
	1,1,2-Trichloroethane	9.8100	10.0000	98.1	79.4	134.9
	Toluene	10.5400	10.0000	105.4	78.2	139.2
	Ethylene dibromide (EDB)	9.8500	10.0000	98.5	79.0	135.0
	Tetrachloroethene	9.7300	10.0000	97.3	76.7	140.4
	Chlorobenzene	11.2100	10.0000	112.1	78.4	138.9
	Ethylbenzene	11.1500	10.0000	111.5	79.5	136.4
	m,p-Xylene	22.7100	20.0000	113.6	72.7	147.7
	Styrene	11.6300	10.0000	116.3	39.6	129.4
	1,1,2,2-Tetrachloroethane	11.8700	10.0000	118.7	77.2	138.0
	o-Xylene	11.2200	10.0000	112.2	68.1	152.1
	4-Ethyltoluene	9.9700	10.0000	99.7	49.1	162.8
	1,3,5-Trimethylbenzene	12.1300	10.0000	121.3	50.5	205.1
	1,2,4-Trimethylbenzene (Pseudocumen	12.0500	10.0000	120.5	46.0	221.8
	Benzyl chloride	11.8200	10.0000	118.2	10.0	160.0
	1,3-Dichlorobenzene	11.6100	10.0000	116.1	74.8	145.0
	1,4-Dichlorobenzene	11.7400	10.0000	117.4	73.5	146.9
	1,2-Dichlorobenzene	11.8800	10.0000	118.8	70.4	154.8
	1,2,4-Trichlorobenzene	18.1400	10.0000	181.4	14.0	202.5
	Hexachloro-1,3-butadiene	11.6900	10.0000	116.9	27.4	191.2

SURG #:65-8340 -A-SU

SAMPLE#	BFB #
SAMPLE 37191-192424	125
SAMPLE 37191-192425	127

Core Lab-Gulf States Analytical
Daily QC Batching Data
Data Released for Reporting

03/31/98
08:03:15
Group: 37286

Analysis Batch Number: 8340 -03/24/98-1094-1
Test Identification : 8340 -Volatiles, TO-14
Number of Samples : 10
Batch Data-Date/Time : 03/28/98 / 13:29:17

Units: ppbv

Sequence: 032498.bQ

SURG #:65-8340 -A-SU

SAMPLE#	BFB #
SAMPLE 37191-192426	128
SAMPLE 37191-192427	146(L)
SAMPLE 37191-192428	138
SAMPLE 37191-192429	148(L)
SAMPLE 37286-192827	115
SAMPLE 37286-192828	92
SAMPLE 37286-192829	87
SAMPLE 37286-192830	89
BLK 1 VBLK-032498	92
CTL 1 LCS-03248	99

65-8340 -A-SU - VOLATILE AIR SURROGATE

SRG ABRV	= SURROGATE DESCRIPTION	QC LIMITS LOWER	UPPER
BFB	p-Bromofluorobenzene	71.3	139.6

---------- Result Footnotes ----------

(P) - Compound Was Not Reported
(L) - Sample Reanalyzed

Groups & Samples

37191-192424 37191-192425 37191-192426 37191-192427 37191-192428 37191-192429 37286-192827 37286-192828
37286-192829 37286-192830

Core Lab-Gulf States Analytical
Daily QC Batching Data
Data Released for Reporting

03/31/98
08:03:18
Group: 37286

Analysis Batch Number: 8340 -03/28/98-1202-1
Test Identification : 8340 -Volatiles, TO-14 Units: ppbv Sequence: 032898.bQ
Number of Samples : 5
Batch Data-Date/Time : 03/30/98 / 14:32:31

BLANK#	ANALYTE	CONC FOUND #	LMT OF QUANTITATION
VBLK-023898	none detected		

CONTROL SAMPLE#	ANALYTE	CONC FOUND	CONC KNOWN	% REC #	QC LIMITS LOWER	QC LIMITS UPPER
LCS-032898	Dichlorodifluoromethane	7.6300	10.0000	76.3(J)	78.2	126.8
	Chloromethane (Methyl chloride)	7.6800	10.0000	76.8	72.1	128.4
	1,2-Dichlorotetrafluoroethane	7.7900	10.0000	77.9	74.3	131.0
	Vinyl chloride	7.6900	10.0000	76.9	74.0	131.7
	Bromomethane (Methyl bromide)	8.1000	10.0000	81.0	79.2	127.0
	Chloroethane (Ethyl chloride)	7.9700	10.0000	79.7	75.4	132.2
	Trichlorofluoromethane	8.1000	10.0000	81.0	77.8	135.4
	1,1-Dichloroethene	8.6300	10.0000	86.3	71.9	143.2
	Dichloromethane	8.9600	10.0000	89.6	77.1	134.1
	Allyl chloride (3-Chloropropene)	10.5300	10.0000	105.3	76.5	129.5
	1,1,2-Trichloro-1,2,2-trifluoroetha	8.9200	10.0000	89.2	77.8	143.3
	1,1-Dichloroethane	9.9400	10.0000	99.4	66.5	159.0
	cis-1,2-Dichloroethene	5.6200	10.0000	56.2(J)	78.1	140.9
	Chloroform	9.7300	10.0000	97.3	77.3	135.9
	1,2-Dichloroethane	9.9700	10.0000	99.7	72.2	148.7
	1,1,1-Trichloroethane	9.8800	10.0000	98.8	73.6	140.3
	Benzene	10.6200	10.0000	106.2	76.5	137.9
	Carbon tetrachloride	9.5700	10.0000	95.7	76.0	136.6
	1,2-Dichloropropane	10.6200	10.0000	106.2	77.6	134.8
	Trichloroethene	10.5700	10.0000	105.7	77.6	135.3
	cis-1,3-Dichloropropene	13.0100	10.0000	130.1	53.3	192.3
	trans-1,3-Dichloropropene	12.1500	10.0000	121.5	34.2	224.1
	1,1,2-Trichloroethane	9.9700	10.0000	99.7	79.4	134.9
	Toluene	12.7800	10.0000	127.8	78.2	139.2
	Ethylene dibromide (EDB)	9.7000	10.0000	97.0	79.0	135.0
	Tetrachloroethene	10.0300	10.0000	100.3	76.7	140.4
	Chlorobenzene	11.7200	10.0000	117.2	78.4	138.9
	Ethylbenzene	12.3500	10.0000	123.5	79.5	136.4
	m,p-Xylene	24.1200	20.0000	120.6	72.7	147.7
	Styrene	12.2600	10.0000	122.6	39.6	129.4
	1,1,2,2-Tetrachloroethane	10.8300	10.0000	108.3	77.2	138.0
	o-Xylene	12.0400	10.0000	120.4	68.1	152.1
	4-Ethyltoluene	12.8500	10.0000	128.5	49.1	162.8
	1,3,5-Trimethylbenzene	10.5200	10.0000	105.2	50.5	205.1
	1,2,4-Trimethylbenzene (Pseudocumen	10.6700	10.0000	106.7	46.0	221.8
	Benzyl chloride	22.7100	10.0000	227.1(P)	10.0	160.0
	1,3-Dichlorobenzene	11.1600	10.0000	111.6	74.8	145.0
	1,4-Dichlorobenzene	10.4500	10.0000	104.5	73.5	146.9
	1,2-Dichlorobenzene	11.0800	10.0000	110.8	70.4	154.8
	1,2,4-Trichlorobenzene	6.0600	10.0000	60.6	14.0	202.5
	Hexachloro-1,3-butadiene	12.0600	10.0000	120.6	27.4	191.2

SURG #:65-8340 -A-SU

SAMPLE#	BFB #
SAMPLE 37286-192827	73
SAMPLE 37286-192828	84

Core Lab-Gulf States Analytical
Daily QC Batching Data
Data Released for Reporting

03/31/98
08:03:19
Group: 37286

Analysis Batch Number: 8340 -03/28/98-1202-1
Test Identification : 8340 -Volatiles, TO-14
Number of Samples : 5
Batch Data-Date/Time : 03/30/98 / 14:32:31

Units: ppbv

Sequence: 032898.bQ

SURG #:65-8340 -A-SU

SAMPLE#	BFB #
SAMPLE 37286-192829	105
SAMPLE 37286-192830	95
SAMPLE 37169-192325	0(A)
BLK 1 VBLK-023898	98
CTL 1 LCS-032898	97

65-8340 -A-SU - VOLATILE AIR SURROGATE

SRG ABRV =	SURROGATE DESCRIPTION	QC LIMITS LOWER	QC LIMITS UPPER
BFB	p-Bromofluorobenzene	71.3	139.6

---------- Result Footnotes ----------

(J) - Within Method Requirements
(P) - Compound Was Not Reported
(A) - Matrix Interference

Groups & Samples

37169-192325 37286-192827 37286-192828 37286-192829 37286-192830

CORE LAB

GULF STATES ANALYTICAL

6310 Rothway, Houston, Texas 77040
(713) 690-4444, Fax (713) 690-5646

Company: ① Fluor Daniel GTI

Address: #116 1100 E. University Tempe Az 85281 Tele #: (602) 9660808 Fax #: 602 8940955

Reports Sent To: Ken Greene

P O #: 397623

Project #: 023300 635 (6005)

Project Name: MCRM (320 W. Lincoln)

Project Location: 320 W. Lincoln Phoenix Az

Sampler(s) Name: (Signature) Michael Orcutt

Courier: Fed Ex

② Field Sample ID	③ Sampling Date	③ Sampling Time	④ Matrix Water	Soil	Sludge	Oil	Other	# of Containers	Haz. Sample (Y/N)	⑤ Request for Analysis TO-14
1. MC N06-50	3-17-98	1026					X			X
2. MC N06-25	3-17-98	1110					X			X
3. MC VW-01	3-17-98	1207					X			X
4. MC-BD	3-17-98	—					X			X
5.										
6.										
7.										
8.										
9.										
10.										
11.										
12.										
13.										

Relinquished by Sampler: (Signature) ⑦	Date 3/17/98	Time: 1430	
Relinquished by: (Signature)	Date	Time:	
Relinquished by: (Signature)	Date	Time:	
Received by: (Signature)	Date	Time:	
Received by: (Signature)	Date	Time:	
Received by Laboratory: (Signature)	Date 3/19/98	Time: 0900	

⑥ Remarks: W/B # 7040328886 (Fed Ex)

Requested Turnaround: 3-5 Day TAT

GSAI Group: 37286

Special Detection Limits

QC Package: (check one)
☐ CLP ☐ Site Specific
☐ Tier 1 ☐ Tier 2 ☐ QC Summary

Analytical Technologies, Inc. 9830 S. 51st Street Suite B-113 Phoenix, AZ 85044 (602) 496-4400

ATI I.D. 302711

RECEIVED
WESTON - TEMPE
MAR 02 1993

March 1, 1993

Roy F. Weston
1600 W. Broadway
Suite 210
Tempe, AZ 85282

Project Name/Number: WVB-MCMM/06405-055-010-0603

Attention: Rich Petrus

On **02/15/93**, Analytical Technologies, Inc. received a request to analyze **soil** sample(s). The sample(s) were analyzed with EPA methodology or equivalent methods. The results of these analyses and the quality control data, which follow each set of analyses, are enclosed.

If you have any questions or comments, please do not hesitate to contact us at (602) 496-4400.

Mary A. Tyer
Mary Tyer
Project Manager

Robert V. Woods
Robert V. Woods
Laboratory Manager

RVW/mag

Enclosure

Analytical Technologies, Inc.

CLIENT : ROY F. WESTON
PROJECT # : 06405-055-010-0603
PROJECT NAME : WVB-MCMM

DATE RECEIVED : 02/15/93
REPORT DATE : 03/01/93

ATI I.D. : 302711

ATI #	CLIENT DESCRIPTION	MATRIX	DATE COLLECTED
01	AVB42-0220-1002	SOIL	02/15/93
02	AVB42-0220-1056	SOIL	02/15/93

----- TOTALS -----

MATRIX	# SAMPLES
SOIL	2

ATI STANDARD DISPOSAL PRACTICE

The samples from this project will be disposed of in thirty (30) days from the date of this report. If an extended storage period is required, please contact our sample control department before the scheduled disposal date.

Analytical Technologies, Inc.

GAS CHROMATOGRAPHY - RESULTS

ATI I.D. : 30271101

TEST : VOLATILE HALOCARBON/AROMATIC (EPA 8010/8020)

CLIENT	: ROY F. WESTON	DATE SAMPLED	: 02/15/93
PROJECT #	: 06405-055-010-0603	DATE RECEIVED	: 02/15/93
PROJECT NAME	: WVB-MCMM	DATE EXTRACTED	: 02/16/93
CLIENT I.D.	: AVB42-0220-1002	DATE ANALYZED	: 02/23/93
SAMPLE MATRIX	: SOIL	UNITS	: MG/KG
		DILUTION FACTOR	: 1

COMPOUNDS	RESULTS
BENZENE	<0.025
BROMODICHLOROMETHANE	<0.010
BROMOFORM	<0.010
BROMOMETHANE	<0.010
CARBON TETRACHLORIDE	<0.010
CHLOROBENZENE	<0.025
CHLOROETHANE	<0.010
CHLOROFORM	<0.010
CHLOROMETHANE	<0.010
DIBROMOCHLOROMETHANE	<0.010
2-CHLOROETHYL VINYL ETHER	<0.025
1,3-DICHLOROBENZENE	<0.025
1,2 & 1,4-DICHLOROBENZENE	<0.025
DICHLORODIFLUOROMETHANE	<0.010
1,1-DICHLOROETHANE	<0.010
1,2-DICHLOROETHANE	<0.010
1,1-DICHLOROETHENE	<0.010
1,2-DICHLOROETHENE(TOTAL)	<0.010
1,2-DICHLOROPROPANE	<0.010
CIS-1,3-DICHLOROPROPENE	<0.010
TRANS-1,3-DICHLOROPROPENE	<0.010
ETHYLBENZENE	<0.025
METHYLENE CHLORIDE	<0.100
1,1,2,2-TETRACHLOROETHANE	<0.010
TETRACHLOROETHENE	0.4
TOLUENE	<0.025
1,1,1-TRICHLOROETHANE	<0.010
1,1,2-TRICHLOROETHANE	<0.010
TRICHLOROETHENE	0.2
TRICHLOROTRIFLUOROETHANE	<0.10
VINYL CHLORIDE	<0.010
TOTAL XYLENES	<0.025
TRICHLOROFLUOROMETHANE	<0.01

SURROGATE PERCENT RECOVERIES

BROMOCHLOROMETHANE (%)	120
BROMOFLUOROBENZENE (%)	106

Analytical Technologies, Inc.

GAS CHROMATOGRAPHY - RESULTS

ATI I.D. : 30271102

TEST : VOLATILE HALOCARBON/AROMATIC (EPA 8010/8020)

CLIENT	: ROY F. WESTON	DATE SAMPLED	: 02/15/93
PROJECT #	: 06405-055-010-0603	DATE RECEIVED	: 02/15/93
PROJECT NAME	: WVB-MCMM	DATE EXTRACTED	: 02/16/93
CLIENT I.D.	: AVB42-0220-1056	DATE ANALYZED	: 02/23/93
SAMPLE MATRIX	: SOIL	UNITS	: MG/KG
		DILUTION FACTOR	: 1

COMPOUNDS	RESULTS
BENZENE	<0.025
BROMODICHLOROMETHANE	<0.010
BROMOFORM	<0.010
BROMOMETHANE	<0.010
CARBON TETRACHLORIDE	<0.010
CHLOROBENZENE	<0.025
CHLOROETHANE	<0.010
CHLOROFORM	<0.010
CHLOROMETHANE	<0.010
DIBROMOCHLOROMETHANE	<0.010
2-CHLOROETHYL VINYL ETHER	<0.025
1,3-DICHLOROBENZENE	<0.025
1,2 & 1,4-DICHLOROBENZENE	<0.025
DICHLORODIFLUOROMETHANE	<0.010
1,1-DICHLOROETHANE	<0.010
1,2-DICHLOROETHANE	<0.010
1,1-DICHLOROETHENE	<0.010
1,2-DICHLOROETHENE(TOTAL)	<0.010
1,2-DICHLOROPROPANE	<0.010
CIS-1,3-DICHLOROPROPENE	<0.010
TRANS-1,3-DICHLOROPROPENE	<0.010
ETHYLBENZENE	<0.025
METHYLENE CHLORIDE	<0.100
1,1,2,2-TETRACHLOROETHANE	<0.010
TETRACHLOROETHENE	0.7
TOLUENE	<0.025
1,1,1-TRICHLOROETHANE	<0.010
1,1,2-TRICHLOROETHANE	<0.010
TRICHLOROETHENE	4.2
TRICHLOROTRIFLUOROETHANE	<0.10
VINYL CHLORIDE	<0.010
TOTAL XYLENES	<0.025
TRICHLOROFLUOROMETHANE	<0.01

SURROGATE PERCENT RECOVERIES

BROMOCHLOROMETHANE (%)	115
BROMOFLUOROBENZENE (%)	115

Analytical Technologies, Inc.

GAS CHROMATOGRAPHY - RESULTS

REAGENT BLANK

TEST : VOLATILE HALOCARBON/AROMATIC (EPA 8010/8020)

CLIENT	: ROY F. WESTON	ATI I.D.	: 302711
PROJECT #	: 06405-055-010-0603	DATE EXTRACTED	: 02/16/93
PROJECT NAME	: WVB-MCMM	DATE ANALYZED	: 02/23/93
CLIENT I.D.	: REAGENT BLANK	UNITS	: MG/KG
		DILUTION FACTOR	: N/A

COMPOUNDS	RESULTS
BENZENE	<0.025
BROMODICHLOROMETHANE	<0.010
BROMOFORM	<0.010
BROMOMETHANE	<0.010
CARBON TETRACHLORIDE	<0.010
CHLOROBENZENE	<0.025
CHLOROETHANE	<0.010
CHLOROFORM	<0.010
CHLOROMETHANE	<0.010
DIBROMOCHLOROMETHANE	<0.010
2-CHLOROETHYL VINYL ETHER	<0.025
1,3-DICHLOROBENZENE	<0.025
1,2 & 1,4-DICHLOROBENZENE	<0.025
DICHLORODIFLUOROMETHANE	<0.010
1,1-DICHLOROETHANE	<0.010
1,2-DICHLOROETHANE	<0.010
1,1-DICHLOROETHENE	<0.010
1,2-DICHLOROETHENE(TOTAL)	<0.010
1,2-DICHLOROPROPANE	<0.010
CIS-1,3-DICHLOROPROPENE	<0.010
TRANS-1,3-DICHLOROPROPENE	<0.010
ETHYLBENZENE	<0.025
METHYLENE CHLORIDE	<0.100
1,1,2,2-TETRACHLOROETHANE	<0.010
TETRACHLOROETHENE	<0.010
TOLUENE	<0.025
1,1,1-TRICHLOROETHANE	<0.010
1,1,2-TRICHLOROETHANE	<0.010
TRICHLOROETHENE	<0.010
TRICHLOROTRIFLUOROETHANE	<0.10
VINYL CHLORIDE	<0.010
TOTAL XYLENES	<0.025
TRICHLOROFLUOROMETHANE	<0.01

SURROGATE PERCENT RECOVERIES

BROMOCHLOROMETHANE (%)	120
BROMOFLUOROBENZENE (%)	106

Analytical Technologies, Inc.

QUALITY CONTROL DATA

ATI I.D. : 302711

TEST : VOLATILE HALOCARBON/AROMATIC (EPA 8010/8020)

CLIENT : ROY F. WESTON
PROJECT # : 06405-055-010-0603
PROJECT NAME : WVB-MCMM
REF I.D. : 30249929

DATE ANALYZED : 02/23/93
SAMPLE MATRIX : NON-AQUEOUS
UNITS : MG/KG

COMPOUNDS	SAMPLE RESULT	CONC. SPIKED	SPIKED SAMPLE	% REC.	DUP. SPIKED SAMPLE	DUP. % REC.	RPD
1,1-DICHLOROETHENE	<0.01	1.00	0.86	86	0.88	88	2
TRICHLOROETHENE	<0.01	1.00	1.01	101	1.03	103	2
TETRACHLOROETHENE	<0.01	1.00	0.99	99	1.03	103	4
BENZENE	<0.025	1.00	0.82	82	0.84	84	2
BROMODICHLOROMETHANE	<0.01	1.00	0.89	89	0.87	87	2
CHLOROFORM	<0.01	1.00	1.08	108	1.05	105	3
1,1,1-TRICHLOROETHANE	<0.01	1.00	1.01	101	1.01	101	0
TOLUENE	<0.025	1.00	0.84	84	0.87	87	4
CHLOROBENZENE	<0.025	1.00	0.94	94	0.94	94	0
M-XYLENE	<0.025	1.00	0.80	80	0.80	80	0

$$\% \text{ Recovery} = \frac{(\text{Spike Sample Result} - \text{Sample Result})}{\text{Spike Concentration}} \times 100$$

$$\text{RPD (Relative \% Difference)} = \frac{(\text{Spiked Sample Result} - \text{Duplicate Spike Sample Result})}{\text{Average of Spiked Sample}} \times 100$$

AnalyticalTechnologies,Inc., Albuquerque, NM
San Diego ▪ Phoenix ▪ Seattle ▪ Pensacola ▪ Ft. Collins ▪ Portland

CHAIN OF CUSTODY

DATE: 15FEB93 PAGE 1 OF 1

ATI LAB I.D. 302711

PLEASE FILL THIS FORM IN COMPLETELY. SHADED AREAS ARE FOR LAB USE ONLY.

PROJECT MANAGER: RICH PETRUS

COMPANY: RIM F WESTON
ADDRESS: 1600 W. BROADWAY SUITE 210
TEMPE AZ 85282
PHONE: 966-2337
FAX: 966-6343

BILL TO: SAME
COMPANY:
ADDRESS:

ANALYSIS REQUEST

SAMPLE ID	DATE	TIME	MATRIX	LAB ID	Petroleum Hydrocarbons (418.1)	(MOD 8015) Gas/Diesel	Diesel/Gasoline/BTXE/MTBE (MOD 8015/8020)	BTXE/MTBE (8020)	Chlorinated Hydrocarbons (601/8010)	Aromatic Hydrocarbons (602/8020)	SDWA Volatiles (502.1/503.1), 502.2 Reg. & Unreg.	Pesticides/PCB (608/8080)	Herbicides (615/8150)	Base/Neutral/Acid Compounds GC/MS (625/8270)	Volatile Organics GC/MS (624/8240)	Polynuclear Aromatics (610/8310)	SDWA Primary Standards - Arizona	SDWA Secondary Standards - Arizona	SDWA Primary Standards - Federal	SDWA Secondary Standards - Federal	The 13 Priority Pollutant Metals	RCRA Metals by Total Digestion	RCRA Metals by TCLP (1311)	NUMBER OF CONTAINERS
AWB3-0220-1002 (42 mtbe)	15FEB93	0945	SOIL	1					X	X														1
AWB3-0220-1036 (42 mtbe)	15FEB93	1120	SOIL	2					X	X														1

PROJECT INFORMATION		SAMPLE RECEIPT	
PROJ. NO.: 2[illegible]-555-010-0[illegible]		NO. CONTAINERS	2
PROJ. NAME: [illegible]		CUSTODY SEALS	(Y) N / NA
P.O. NO.:		RECEIVED INTACT	Y
SHIPPED VIA:		RECEIVED COLD	Y

PRIOR AUTHORIZATION IS REQUIRED FOR RUSH PROJECTS

(RUSH) ☐ 24hr ☐ 48hr ☐ 72hr ☐ 1 WEEK (NORMAL) ☐ 2 WEEK

Comments:

SAMPLED & RELINQUISHED BY: 1.	RELINQUISHED BY: 2.	RELINQUISHED BY: 3.
Signature: David Christiana Stetson Time: 1735	Signature: Time:	Signature: Time:
Printed Name: DAVID CHRISTIANA STETSON Date:	Printed Name: Date:	Printed Name: Date:
Company: R. WESTON Phone: 966-2337	Company:	Company:

RECEIVED BY: 1.	RECEIVED BY: 2.	RECEIVED BY: (LAB) 3.
Signature: Time:	Signature: Time:	Signature: [signature] Time: 535
Printed Name: Date:	Printed Name: Date:	Printed Name: MARGUERITE ORISCOLL Date:
Company:	Company:	Analytical Technologies, Inc. 2/15/93

ATI Labs: San Diego (619) 458-9141 ▪ Phoenix (602) 496-4400 ▪ Seattle (206) 228-8335 ▪ Pensacola (904) 474-1001 ▪ Portland (503) 684-0447 ▪ Albuquerque (505) 344-3777 DISTRIBUTION: White, Canary - ATI ▪ Pink - ORIGINATOR

GTEL
ENVIRONMENTAL
LABORATORIES, INC.

Northwest Region
4080-C Pike Lane
Concord, CA 94520
(510) 685-7852
(800) 544-3422 *from inside California*
(800) 423-7143 *from outside California*
(510) 825-0720 (FAX)

FILE COPY

June 5, 1995

Ken Greene
Groundwater Technology, Inc.
1100 East University, Suite 116
Tempe, AZ 85281

RE: GTEL Client ID:	023300118
Login Number:	C5050136
Project ID (number):	023300118
Project ID (name):	Maricopa RIFS/3rd Ave & Lincoln, Phoenix, AZ

Dear Ken Greene:

Enclosed please find the analytical results for the samples received by GTEL Environmental Laboratories, Inc. on 05/17/95, 05/18/95, 05/19/95 under Chain-of-Custody Number(s) 37519, 37520, 37521.

A formal Quality Assurance/Quality Control (QA/QC) program is maintained by GTEL, which is designed to meet or exceed the EPA requirements. Analytical work for this project met QA/QC criteria unless otherwise stated in the footnotes.

GTEL is certified by the State of Arizona under Certification Number AZ 0302.

If you have any questions regarding this analysis, or if we can be of further assistance, please call our Customer Service Representative.

Sincerely,
GTEL Environmental Laboratories, Inc.

Rashmi Shah
Laboratory Director

RECEIVED
JUN 19 1995
GROUNDWATER TECHNOLOGY
TEMPE, ARIZONA

GTEL Client ID: 023300118
Login Number: C5050136
Project ID (number): 023300118
Project ID (name): Maricopa RIFS/3rd Ave & Lincoln, Phoenix, AZ

ANALYTICAL RESULTS

Volatile Organics
Method: EPA 8010A
Matrix: Solids

GTEL Sample Number		C5050136-01	C5050136-02	C5050136-03	--
Client ID		PZ1-45'	FIELD BLANK 1 (5/17)	TRIP BLANK (5/17)	--
Date Sampled		05/17/95	05/17/95	05/17/95	--
Date Analyzed		05/23/95	05/23/95	05/23/95	--
Dilution Factor		1.00	1.00	1.00	--
Analyte	Reporting Limit	Units	Concentration:Wet Weight		
Chloromethane	0.020	mg/kg	< 0.020	< 0.020	< 0.020	--
Vinyl chloride	0.020	mg/kg	< 0.020	< 0.020	< 0.020	--
Bromomethane	0.020	mg/kg	< 0.020	< 0.020	< 0.020	--
Chloroethane	0.020	mg/kg	< 0.020	< 0.020	< 0.020	--
Trichlorofluoromethane	0.020	mg/kg	< 0.020	< 0.020	< 0.020	--
1,1-Dichloroethene	0.020	mg/kg	< 0.020	< 0.020	< 0.020	--
Methylene chloride	0.020	mg/kg	0.047	< 0.020	< 0.020	--
1,2-Dichloroethene (total)	0.020	mg/kg	< 0.020	< 0.020	< 0.020	--
1,1-Dichloroethane	0.020	mg/kg	< 0.020	< 0.020	< 0.020	--
Chloroform	0.020	mg/kg	< 0.020	< 0.020	< 0.020	--
1,1,1-Trichloroethane	0.020	mg/kg	< 0.020	< 0.020	< 0.020	--
Carbon tetrachloride	0.020	mg/kg	< 0.020	< 0.020	< 0.020	--
1,2-Dichloroethane	0.020	mg/kg	< 0.020	< 0.020	< 0.020	--
Trichloroethene	0.020	mg/kg	< 0.020	< 0.020	< 0.020	--
1,2-Dichloropropane	0.020	mg/kg	< 0.020	< 0.020	< 0.020	--
Bromodichloromethane	0.020	mg/kg	< 0.020	< 0.020	< 0.020	--
2-Chloroethyl vinyl ether	0.020	mg/kg	< 0.020	< 0.020	< 0.020	--
cis-1,3-Dichloropropene	0.020	mg/kg	< 0.020	< 0.020	< 0.020	--
trans-1,3-Dichloropropene	0.020	mg/kg	< 0.020	< 0.020	< 0.020	--
1,1,2-Trichloroethane	0.020	mg/kg	< 0.020	< 0.020	< 0.020	--
Tetrachloroethene	0.020	mg/kg	< 0.020	< 0.020	< 0.020	--
Dibromochloromethane	0.020	mg/kg	< 0.020	< 0.020	< 0.020	--
Chlorobenzene	0.020	mg/kg	< 0.020	< 0.020	< 0.020	--
Bromoform	0.020	mg/kg	< 0.020	< 0.020	< 0.020	--
1,1,2,2-Tetrachloroethane	0.020	mg/kg	< 0.020	< 0.020	< 0.020	--
1,3-Dichlorobenzene	0.020	mg/kg	< 0.020	< 0.020	< 0.020	--
1,4-Dichlorobenzene	0.020	mg/kg	< 0.020	< 0.020	< 0.020	--
1,2-Dichlorobenzene	0.020	mg/kg	< 0.020	< 0.020	< 0.020	--
BFB (surrogate)	--	%	63.2	68.4	63.4	--

Notes:

Dilution Factor:

Dilution factor indicates the adjustments made for sample dilution.

EPA 8010A:

"Test Methods for Evaluating Solid Waste, Physical/Chemical Methods", SW-846, Third Edition including promulgated Update 1. Bromofluorobenzene surrogate recovery acceptability limits are 60 - 140 %.

C5050136-01:

Extracted 5/17/95 at 13:25. Methylene Chloride is a common laboratory contaminant.

GTEL ENVIRONMENTAL LABORATORIES, INC.

GTEL Client ID: 023300118 ANALYTICAL RESULTS
Login Number: C5050136 Volatile Organics
Project ID (number): 023300118 Method: EPA 8010A
Project ID (name): Maricopa RIFS/3rd Ave & Lincoln, Phoenix, AZ Matrix: Solids

GTEL Sample Number	C5050136-01	C5050136-02	C5050136-03	--
Client ID	PZ1-45'	FIELD BLANK 1 (5/17)	TRIP BLANK (5/17)	--
Date Sampled	05/17/95	05/17/95	05/17/95	--
Date Analyzed	05/23/95	05/23/95	05/23/95	--
Dilution Factor	1.00	1.00	1.00	--

Analyte	Reporting Limit	Units	Concentration:Wet Weight

Notes: (continued)

C5050136-02:
Extracted 5/17/95 at 09:30.
C5050136-03:
Extracted 5/17/95 at 09:31.

GTEL ENVIRONMENTAL LABORATORIES, INC.

GTEL Client ID: 023300118
Login Number: C5050136
Project ID (number): 023300118
Project ID (name): Maricopa RIFS/3rd Ave & Lincoln, Phoenix, AZ

ANALYTICAL RESULTS

Volatile Organics
Method: EPA 8010A
Matrix: Solids

GTEL Sample Number	C5050136-04	C5050136-05	C5050136-06	--
Client ID	PZ1-55	PZ1-60	FIELD BLANK 2 (5/17)	--
Date Sampled	05/17/95	05/17/95	05/17/95	--
Date Analyzed	05/23/95	05/23/95	05/23/95	--
Dilution Factor	1.00	1.00	1.00	--

Analyte	Reporting Limit	Units	Concentration:Wet Weight			
Chloromethane	0.020	mg/kg	< 0.020	< 0.020	< 0.020	--
Vinyl chloride	0.020	mg/kg	< 0.020	< 0.020	< 0.020	--
Bromomethane	0.020	mg/kg	< 0.020	< 0.020	< 0.020	--
Chloroethane	0.020	mg/kg	< 0.020	< 0.020	< 0.020	--
Trichlorofluoromethane	0.020	mg/kg	< 0.020	< 0.020	< 0.020	--
1,1-Dichloroethene	0.020	mg/kg	< 0.020	< 0.020	< 0.020	--
Methylene chloride	0.020	mg/kg	< 0.020	< 0.020	< 0.020	--
1,2-Dichloroethene (total)	0.020	mg/kg	< 0.020	< 0.020	< 0.020	--
1,1-Dichloroethane	0.020	mg/kg	< 0.020	< 0.020	< 0.020	--
Chloroform	0.020	mg/kg	< 0.020	< 0.020	< 0.020	--
1,1,1-Trichloroethane	0.020	mg/kg	< 0.020	< 0.020	< 0.020	--
Carbon tetrachloride	0.020	mg/kg	< 0.020	< 0.020	< 0.020	--
1,2-Dichloroethane	0.020	mg/kg	**0.10**	< 0.020	< 0.020	--
Trichloroethene	0.020	mg/kg	**0.20**	< 0.020	< 0.020	--
1,2-Dichloropropane	0.020	mg/kg	< 0.020	< 0.020	< 0.020	--
Bromodichloromethane	0.020	mg/kg	< 0.020	< 0.020	< 0.020	--
2-Chloroethyl vinyl ether	0.020	mg/kg	< 0.020	< 0.020	< 0.020	--
cis-1,3-Dichloropropene	0.020	mg/kg	< 0.020	< 0.020	< 0.020	--
trans-1,3-Dichloropropene	0.020	mg/kg	< 0.020	< 0.020	< 0.020	--
1,1,2-Trichloroethane	0.020	mg/kg	< 0.020	< 0.020	< 0.020	--
Tetrachloroethene	0.020	mg/kg	**0.12**	< 0.020	< 0.020	--
Dibromochloromethane	0.020	mg/kg	< 0.020	< 0.020	< 0.020	--
Chlorobenzene	0.020	mg/kg	< 0.020	< 0.020	< 0.020	--
Bromoform	0.020	mg/kg	< 0.020	< 0.020	< 0.020	--
1,1,2,2-Tetrachloroethane	0.020	mg/kg	< 0.020	< 0.020	< 0.020	--
1,3-Dichlorobenzene	0.020	mg/kg	< 0.020	< 0.020	< 0.020	--
1,4-Dichlorobenzene	0.020	mg/kg	< 0.020	< 0.020	< 0.020	--
1,2-Dichlorobenzene	0.020	mg/kg	< 0.020	< 0.020	< 0.020	--
BFB (surrogate)	--	%	60.0	69.5	56.9	--

Notes:

Dilution Factor:

Dilution factor indicates the adjustments made for sample dilution.

EPA 8010A:

"Test Methods for Evaluating Solid Waste, Physical/Chemical Methods", SW-846, Third Edition including promulgated Update 1. Bromofluorobenzene surrogate recovery acceptability limits are 60 - 140 %.

C5050136-04:

Extracted 5/17/95 at 14:08.

C5050136-05:

GTEL Concord, CA
C5050136:1

GTEL ENVIRONMENTAL LABORATORIES, INC.

GTEL Client ID: 023300118
Login Number: C5050136
Project ID (number): 023300118
Project ID (name): Maricopa RIFS/3rd Ave & Lincoln, Phoenix, AZ

ANALYTICAL RESULTS

Volatile Organics
Method: EPA 8010A
Matrix: Solids

GTEL Sample Number	C5050136-04	C5050136-05	C5050136-06	--
Client ID	PZ1-55	PZ1-60	FIELD BLANK 2 (5/17)	--
Date Sampled	05/17/95	05/17/95	05/17/95	--
Date Analyzed	05/23/95	05/23/95	05/23/95	--
Dilution Factor	1.00	1.00	1.00	--

Analyte	Reporting Limit	Units	Concentration:Wet Weight

Notes: (continued)

Extracted 5/17/95 at 14:13.

C5050136-06:

Extracted 5/17/95 at 14:30. BFB recovery low due to possible loading error.

GTEL ENVIRONMENTAL LABORATORIES, INC.

GTEL Client ID: 023300118
Login Number: C5050136
Project ID (number): 023300118
Project ID (name): Maricopa RIFS/3rd Ave & Lincoln, Phoenix, AZ

ANALYTICAL RESULTS

Volatile Organics
Method: EPA 8010A
Matrix: Solids

GTEL Sample Number	C5050136-07	C5050136-08	--	--
Client ID	TRIP BLANK (5/18)	FIELD BLANK 1 (5/18)	--	--
Date Sampled	05/18/95	05/18/95	--	--
Date Analyzed	05/24/95	05/24/95	--	--
Dilution Factor	1.00	1.00	--	--

Analyte	Reporting Limit	Units	Concentration:Wet Weight			
Chloromethane	0.020	mg/kg	< 0.020	< 0.020	--	--
Vinyl chloride	0.020	mg/kg	< 0.020	< 0.020	--	--
Bromomethane	0.020	mg/kg	< 0.020	< 0.020	--	--
Chloroethane	0.020	mg/kg	< 0.020	< 0.020	--	--
Trichlorofluoromethane	0.020	mg/kg	< 0.020	< 0.020	--	--
1,1-Dichloroethene	0.020	mg/kg	< 0.020	< 0.020	--	--
Methylene chloride	0.020	mg/kg	0.020	0.030	--	--
1,2-Dichloroethene (total)	0.020	mg/kg	< 0.020	< 0.020	--	--
1,1-Dichloroethane	0.020	mg/kg	< 0.020	< 0.020	--	--
Chloroform	0.020	mg/kg	< 0.020	< 0.020	--	--
1,1,1-Trichloroethane	0.020	mg/kg	< 0.020	< 0.020	--	--
Carbon tetrachloride	0.020	mg/kg	< 0.020	< 0.020	--	--
1,2-Dichloroethane	0.020	mg/kg	< 0.020	< 0.020	--	--
Trichloroethene	0.020	mg/kg	< 0.020	< 0.020	--	--
1,2-Dichloropropane	0.020	mg/kg	< 0.020	< 0.020	--	--
Bromodichloromethane	0.020	mg/kg	< 0.020	< 0.020	--	--
2-Chloroethyl vinyl ether	0.020	mg/kg	< 0.020	< 0.020	--	--
cis-1,3-Dichloropropene	0.020	mg/kg	< 0.020	< 0.020	--	--
trans-1,3-Dichloropropene	0.020	mg/kg	< 0.020	< 0.020	--	--
1,1,2-Trichloroethane	0.020	mg/kg	< 0.020	< 0.020	--	--
Tetrachloroethene	0.020	mg/kg	< 0.020	< 0.020	--	--
Dibromochloromethane	0.020	mg/kg	< 0.020	< 0.020	--	--
Chlorobenzene	0.020	mg/kg	< 0.020	< 0.020	--	--
Bromoform	0.020	mg/kg	< 0.020	< 0.020	--	--
1,1,2,2-Tetrachloroethane	0.020	mg/kg	< 0.020	< 0.020	--	--
1,3-Dichlorobenzene	0.020	mg/kg	< 0.020	< 0.020	--	--
1,4-Dichlorobenzene	0.020	mg/kg	< 0.020	< 0.020	--	--
1,2-Dichlorobenzene	0.020	mg/kg	< 0.020	< 0.020	--	--
BFB (surrogate)	--	%	78.0	56.5	--	--

Notes:

Dilution Factor:

Dilution factor indicates the adjustments made for sample dilution.

EPA 8010A:

"Test Methods for Evaluating Solid Waste, Physical/Chemical Methods", SW-846, Third Edition including promulgated Update 1. Bromofluorobenzene surrogate recovery acceptability limits are 60 - 140 %.

C5050136-07:

Extracted 5/18/95 at 08:37. Methylene Chloride is a common laboratory contaminant.

GTEL ENVIRONMENTAL LABORATORIES, INC.

GTEL Client ID: 023300118
Login Number: C5050136
Project ID (number): 023300118
Project ID (name): Maricopa RIFS/3rd Ave & Lincoln, Phoenix, AZ

ANALYTICAL RESULTS

Volatile Organics
Method: EPA 8010A
Matrix: Solids

GTEL Sample Number	C5050136-07	C5050136-08	--	--
Client ID	TRIP BLANK (5/18)	FIELD BLANK 1 (5/18)	--	--
Date Sampled	05/18/95	05/18/95	--	--
Date Analyzed	05/24/95	05/24/95	--	--
Dilution Factor	1.00	1.00	--	--

Analyte	Reporting Limit	Units	Concentration:Wet Weight

Notes: (continued)

C5050136-08:

Extracted 5/18/95 at 08:39. BFB recovery low do to possible loading error. Methylene Chloride is a common laboratory contaminant.

GTEL ENVIRONMENTAL LABORATORIES, INC.

GTEL Client ID: 023300118
Login Number: C5050136
Project ID (number): 023300118
Project ID (name): Maricopa RIFS/3rd Ave & Lincoln, Phoenix, AZ

ANALYTICAL RESULTS

Volatile Organics
Method: EPA 8010A
Matrix: Solids

GTEL Sample Number	C5050136-13	C5050136-14	C5050136-15	--
Client ID	VW1-48	FIELD BLANK 2 (5/18)	TRIP BLANK (5/19)	--
Date Sampled	05/18/95	05/18/95	05/19/95	--
Date Analyzed	05/24/95	05/24/95	05/24/95	--
Dilution Factor	1.00	1.00	1.00	--

Analyte	Reporting Limit	Units	Concentration:Wet Weight			
Chloromethane	0.020	mg/kg	< 0.020	< 0.020	< 0.020	--
Vinyl chloride	0.020	mg/kg	< 0.020	< 0.020	< 0.020	--
Bromomethane	0.020	mg/kg	< 0.020	< 0.020	< 0.020	--
Chloroethane	0.020	mg/kg	< 0.020	< 0.020	< 0.020	--
Trichlorofluoromethane	0.020	mg/kg	< 0.020	< 0.020	< 0.020	--
1,1-Dichloroethene	0.020	mg/kg	< 0.020	< 0.020	< 0.020	--
Methylene chloride	0.020	mg/kg	< 0.020	< 0.020	0.080	--
1,2-Dichloroethene (total)	0.020	mg/kg	< 0.020	< 0.020	< 0.020	--
1,1-Dichloroethane	0.020	mg/kg	< 0.020	< 0.020	< 0.020	--
Chloroform	0.020	mg/kg	< 0.020	< 0.020	< 0.020	--
1,1,1-Trichloroethane	0.020	mg/kg	< 0.020	< 0.020	< 0.020	--
Carbon tetrachloride	0.020	mg/kg	< 0.020	< 0.020	< 0.020	--
1,2-Dichloroethane	0.020	mg/kg	< 0.020	< 0.020	< 0.020	--
Trichloroethene	0.020	mg/kg	< 0.020	< 0.020	< 0.020	--
1,2-Dichloropropane	0.020	mg/kg	< 0.020	< 0.020	< 0.020	--
Bromodichloromethane	0.020	mg/kg	< 0.020	< 0.020	< 0.020	--
2-Chloroethyl vinyl ether	0.020	mg/kg	< 0.020	< 0.020	< 0.020	--
cis-1,3-Dichloropropene	0.020	mg/kg	< 0.020	< 0.020	< 0.020	--
trans-1,3-Dichloropropene	0.020	mg/kg	< 0.020	< 0.020	< 0.020	--
1,1,2-Trichloroethane	0.020	mg/kg	< 0.020	< 0.020	< 0.020	--
Tetrachloroethene	0.020	mg/kg	0.13	< 0.020	< 0.020	--
Dibromochloromethane	0.020	mg/kg	< 0.020	< 0.020	< 0.020	--
Chlorobenzene	0.020	mg/kg	< 0.020	< 0.020	< 0.020	--
Bromoform	0.020	mg/kg	< 0.020	< 0.020	< 0.020	--
1,1,2,2-Tetrachloroethane	0.020	mg/kg	< 0.020	< 0.020	< 0.020	--
1,3-Dichlorobenzene	0.020	mg/kg	< 0.020	< 0.020	< 0.020	--
1,4-Dichlorobenzene	0.020	mg/kg	< 0.020	< 0.020	< 0.020	--
1,2-Dichlorobenzene	0.020	mg/kg	< 0.020	< 0.020	< 0.020	--
BFB (surrogate)	--	%	64.0	68.8	60.2	--

Notes:

Dilution Factor:

Dilution factor indicates the adjustments made for sample dilution.

EPA 8010A:

"Test Methods for Evaluating Solid Waste, Physical/Chemical Methods", SW-846, Third Edition including promulgated Update 1. Bromofluorobenzene surrogate recovery acceptability limits are 60 - 140 %.

C5050136-13:

Extracted 5/18/95 at 10:48.

C5050136-14:

GTEL Concord, CA
C5050136:1

GTEL ENVIRONMENTAL LABORATORIES, INC.

GTEL Client ID: 023300118 ANALYTICAL RESULTS
Login Number: C5050136 Volatile Organics
Project ID (number): 023300118 Method: EPA 8010A
Project ID (name): Maricopa RIFS/3rd Ave & Lincoln, Phoenix, AZ Matrix: Solids

GTEL Sample Number	C5050136-13	C5050136-14	C5050136-15	--	--
Client ID	VW1-48	FIELD BLANK 2 (5/18)	TRIP BLANK (5/19)		--
Date Sampled	05/18/95	05/18/95	05/19/95	--	
Date Analyzed	05/24/95	05/24/95	05/24/95	--	
Dilution Factor	1.00	1.00	1.00	--	

Analyte	Reporting Limit	Units	Concentration:Wet Weight

Notes: (continued)

Extracted 5/18/95 at 10:52.

C5050136-15:

Extracted 5/19/95 at 9:09.

GTEL ENVIRONMENTAL LABORATORIES, INC.

GTEL Client ID: 023300118
Login Number: C5050136
Project ID (number): 023300118
Project ID (name): Maricopa RIFS/3rd Ave & Lincoln, Phoenix, AZ

ANALYTICAL RESULTS

Volatile Organics
Method: EPA 8010A
Matrix: Solids

GTEL Sample Number	C5050136-16	C5050136-17	C5050136-18	--
Client ID	FIELD BLANK (5/19)	EW01-10	EW01-20	--
Date Sampled	05/19/95	05/19/95	05/19/95	--
Date Analyzed	05/31/95	05/31/95	05/31/95	--
Dilution Factor	1.00	1.00	1.00	--

Analyte	Reporting Limit	Units	Concentration:Wet Weight			
Chloromethane	0.020	mg/kg	< 0.020	< 0.020	< 0.020	--
Vinyl chloride	0.020	mg/kg	< 0.020	< 0.020	< 0.020	--
Bromomethane	0.020	mg/kg	< 0.020	< 0.020	< 0.020	--
Chloroethane	0.020	mg/kg	< 0.020	< 0.020	< 0.020	--
Trichlorofluoromethane	0.020	mg/kg	< 0.020	< 0.020	< 0.020	--
1,1-Dichloroethene	0.020	mg/kg	< 0.020	< 0.020	< 0.020	--
Methylene chloride	0.020	mg/kg	0.020	< 0.020	< 0.020	--
1,2-Dichloroethene (total)	0.020	mg/kg	< 0.020	< 0.020	< 0.020	--
1,1-Dichloroethane	0.020	mg/kg	< 0.020	< 0.020	< 0.020	--
Chloroform	0.020	mg/kg	< 0.020	< 0.020	< 0.020	--
1,1,1-Trichloroethane	0.020	mg/kg	< 0.020	< 0.020	< 0.020	--
Carbon tetrachloride	0.020	mg/kg	< 0.020	< 0.020	< 0.020	--
1,2-Dichloroethane	0.020	mg/kg	< 0.020	< 0.020	< 0.020	--
Trichloroethene	0.020	mg/kg	< 0.020	< 0.020	< 0.020	--
1,2-Dichloropropane	0.020	mg/kg	< 0.020	< 0.020	< 0.020	--
Bromodichloromethane	0.020	mg/kg	< 0.020	< 0.020	< 0.020	--
2-Chloroethyl vinyl ether	0.020	mg/kg	< 0.020	< 0.020	< 0.020	--
cis-1,3-Dichloropropene	0.020	mg/kg	< 0.020	< 0.020	< 0.020	--
trans-1,3-Dichloropropene	0.020	mg/kg	< 0.020	< 0.020	< 0.020	--
1,1,2-Trichloroethane	0.020	mg/kg	< 0.020	< 0.020	< 0.020	--
Tetrachloroethene	0.020	mg/kg	< 0.020	< 0.020	< 0.020	--
Dibromochloromethane	0.020	mg/kg	< 0.020	< 0.020	< 0.020	--
Chlorobenzene	0.020	mg/kg	< 0.020	< 0.020	< 0.020	--
Bromoform	0.020	mg/kg	< 0.020	< 0.020	< 0.020	--
1,1,2,2-Tetrachloroethane	0.020	mg/kg	< 0.020	< 0.020	< 0.020	--
1,3-Dichlorobenzene	0.020	mg/kg	< 0.020	< 0.020	< 0.020	--
1,4-Dichlorobenzene	0.020	mg/kg	< 0.020	< 0.020	< 0.020	--
1,2-Dichlorobenzene	0.020	mg/kg	< 0.020	< 0.020	< 0.020	--
BFB (surrogate)	--	%	66.4	55.0	63.0	--

Notes:

Dilution Factor:

Dilution factor indicates the adjustments made for sample dilution.

EPA 8010A:

"Test Methods for Evaluating Solid Waste, Physical/Chemical Methods", SW-846, Third Edition including promulgated Update 1. Bromofluorobenzene surrogate recovery acceptability limits are 60 - 140 %.

C5050136-16:

Methylene Chloride is a common laboratory contaminant. Extracted 5/19/95 at 09:10.

GTEL ENVIRONMENTAL LABORATORIES, INC.

GTEL Client ID: 023300118
Login Number: C5050136
Project ID (number): 023300118
Project ID (name): Maricopa RIFS/3rd Ave & Lincoln, Phoenix, AZ

ANALYTICAL RESULTS

Volatile Organics
Method: EPA 8010A
Matrix: Solids

GTEL Sample Number	C5050136-16	C5050136-17	C5050136-18	--
Client ID	FIELD BLANK (5/19)	EW01-10	EW01-20	--
Date Sampled	05/19/95	05/19/95	05/19/95	--
Date Analyzed	05/31/95	05/31/95	05/31/95	--
Dilution Factor	1.00	1.00	1.00	--

Analyte	Reporting Limit	Units	Concentration:Wet Weight

Notes: (continued)

C5050136-17:

Estimated concentration, surrogate recovery demonstrated sample specific matrix effect. Laboratory control sample indicated the analysis was within control limits. Extracted 5/19/95 at 09:12.

C5050136-18:

Extracted 5/19/95 at 09:19.

GTEL ENVIRONMENTAL LABORATORIES, INC.

GTEL Client ID: 023300118
Login Number: C5050136
Project ID (number): 023300118
Project ID (name): Maricopa RIFS/3rd Ave & Lincoln, Phoenix, AZ

ANALYTICAL RESULTS

Volatile Organics
Method: EPA 8010A
Matrix: Solids

GTEL Sample Number	C5050136-19	C5050136-20	C5050136-21	--
Client ID	EW01-30	EW01-40	EW01-50	--
Date Sampled	05/19/95	05/19/95	05/19/95	--
Date Analyzed	05/31/95	05/31/95	05/31/95	--
Dilution Factor	1.00	1.00	1.00	--

Analyte	Reporting Limit	Units	Concentration:Wet Weight

Notes: (continued)

Methylene Chloride is a common laboratory contaminant. The field blank has a hit of .020 mg/kg. Extracted 5/19/95 at 10:03.

C5050136-21:

Extracted 5/19/95 at 10:37.

GTEL ENVIRONMENTAL LABORATORIES, INC.

GTEL Client ID: 023300118
Login Number: C5050136
Project ID (number): 023300118
Project ID (name): Maricopa RIFS/3rd Ave & Lincoln, Phoenix, AZ

ANALYTICAL RESULTS

Volatile Organics
Method: EPA 8010A
Matrix: Solids

GTEL Sample Number	C5050136-09	C5050136-10	C5050136-11	C5050136-12
Client ID	VW1-10	VW1-18	VW1-28	VW1-38
Date Sampled	05/18/95	05/18/95	05/18/95	05/18/95
Date Analyzed	05/24/95	05/24/95	05/29/95	05/29/95
Dilution Factor	1.00	1.00	1.00	1.00

Analyte	Reporting Limit	Units	Concentration:Wet Weight			
Chloromethane	0.020	mg/kg	< 0.020	< 0.020	< 0.020	< 0.020
Vinyl chloride	0.020	mg/kg	< 0.020	< 0.020	< 0.020	< 0.020
Bromomethane	0.020	mg/kg	< 0.020	< 0.020	< 0.020	< 0.020
Chloroethane	0.020	mg/kg	< 0.020	< 0.020	< 0.020	< 0.020
Trichlorofluoromethane	0.020	mg/kg	< 0.020	< 0.020	< 0.020	< 0.020
1,1-Dichloroethene	0.020	mg/kg	< 0.020	< 0.020	< 0.020	< 0.020
Methylene chloride	0.020	mg/kg	< 0.020	< 0.020	< 0.020	< 0.020
1,2-Dichloroethene (total)	0.020	mg/kg	< 0.020	< 0.020	< 0.020	< 0.020
1,1-Dichloroethane	0.020	mg/kg	< 0.020	< 0.020	< 0.020	< 0.020
Chloroform	0.020	mg/kg	< 0.020	< 0.020	< 0.020	< 0.020
1,1,1-Trichloroethane	0.020	mg/kg	< 0.020	< 0.020	< 0.020	< 0.020
Carbon tetrachloride	0.020	mg/kg	< 0.020	< 0.020	< 0.020	< 0.020
1,2-Dichloroethane	0.020	mg/kg	< 0.020	< 0.020	< 0.020	< 0.020
Trichloroethene	0.020	mg/kg	**0.070**	< 0.020	< 0.020	< 0.020
1,2-Dichloropropane	0.020	mg/kg	< 0.020	< 0.020	< 0.020	< 0.020
Bromodichloromethane	0.020	mg/kg	< 0.020	< 0.020	< 0.020	< 0.020
2-Chloroethyl vinyl ether	0.020	mg/kg	< 0.020	< 0.020	< 0.020	< 0.020
cis-1,3-Dichloropropene	0.020	mg/kg	< 0.020	< 0.020	< 0.020	< 0.020
trans-1,3-Dichloropropene	0.020	mg/kg	< 0.020	< 0.020	< 0.020	< 0.020
1,1,2-Trichloroethane	0.020	mg/kg	< 0.020	< 0.020	< 0.020	< 0.020
Tetrachloroethene	0.020	mg/kg	**0.11**	**0.098**	< 0.020	< 0.020
Dibromochloromethane	0.020	mg/kg	< 0.020	< 0.020	< 0.020	< 0.020
Chlorobenzene	0.020	mg/kg	< 0.020	< 0.020	< 0.020	< 0.020
Bromoform	0.020	mg/kg	< 0.020	< 0.020	< 0.020	< 0.020
1,1,2,2-Tetrachloroethane	0.020	mg/kg	< 0.020	< 0.020	< 0.020	< 0.020
1,3-Dichlorobenzene	0.020	mg/kg	< 0.020	< 0.020	< 0.020	< 0.020
1,4-Dichlorobenzene	0.020	mg/kg	< 0.020	< 0.020	< 0.020	< 0.020
1,2-Dichlorobenzene	0.020	mg/kg	< 0.020	< 0.020	< 0.020	< 0.020
BFB (surrogate)	--	%	61.3	61.6	64.9	66.2

Notes:

Dilution Factor:

Dilution factor indicates the adjustments made for sample dilution.

EPA 8010A:

"Test Methods for Evaluating Solid Waste, Physical/Chemical Methods", SW-846, Third Edition including promulgated Update 1. Bromofluorobenzene surrogate recovery acceptability limits are 60 - 140 %.

C5050136-09:

Extracted 5/18/95 at 09:37.

C5050136-10:

GTEL ENVIRONMENTAL LABORATORIES, INC.

GTEL Client ID: 023300118
Login Number: C5050136
Project ID (number): 023300118
Project ID (name): Maricopa RIFS/3rd Ave & Lincoln, Phoenix, AZ

ANALYTICAL RESULTS

Volatile Organics
Method: EPA 8010A
Matrix: Solids

GTEL Sample Number	C5050136-09	C5050136-10	C5050136-11	C5050136-12
Client ID	VW1-10	VW1-18	VW1-28	VW1-38
Date Sampled	05/18/95	05/18/95	05/18/95	05/18/95
Date Analyzed	05/24/95	05/24/95	05/29/95	05/29/95
Dilution Factor	1.00	1.00	1.00	1.00

Analyte	Reporting Limit	Units	Concentration:Wet Weight

Notes: (continued)

Extracted 5/18/95 at 09:50.

C5050136-11:

Sample received with low methanol volume. Sample was re-extracted and re-analyzed and results confirmed. Extracted 5/18/95 at 10:06. Re-extraction done 5/31/95 at 15:15

C5050136-12:

Extracted 5/18/95 at 10:19.

GTEL ENVIRONMENTAL LABORATORIES, INC.

GTEL Client ID: 023300118
Login Number: C5050136
Project ID (number): 023300118
Project ID (name): Maricopa RIFS/3rd Ave & Lincoln, Phoenix, AZ

ANALYTICAL RESULTS

Volatile Organics
Method: EPA 8010A
Matrix: Solids

GTEL Sample Number		C5050136-22	C5050136-23	--	--
Client ID		EW01-60	FIELD BLANK 2 (5/19)	--	--
Date Sampled		05/19/95	05/19/95	--	--
Date Analyzed		05/25/95	05/25/95	--	--
Dilution Factor		1.00	1.00	--	--
Analyte	Reporting Limit / Units	Concentration:Wet Weight			
Chloromethane	0.020 mg/kg	< 0.020	< 0.020	--	--
Vinyl chloride	0.020 mg/kg	< 0.020	< 0.020	--	--
Bromomethane	0.020 mg/kg	< 0.020	< 0.020	--	--
Chloroethane	0.020 mg/kg	< 0.020	< 0.020	--	--
Trichlorofluoromethane	0.020 mg/kg	< 0.020	< 0.020	--	--
1,1-Dichloroethene	0.020 mg/kg	< 0.020	< 0.020	--	--
Methylene chloride	0.020 mg/kg	< 0.020	< 0.020	--	--
1,2-Dichloroethene (total)	0.020 mg/kg	< 0.020	< 0.020	--	--
1,1-Dichloroethane	0.020 mg/kg	< 0.020	< 0.020	--	--
Chloroform	0.020 mg/kg	< 0.020	< 0.020	--	--
1,1,1-Trichloroethane	0.020 mg/kg	< 0.020	< 0.020	--	--
Carbon tetrachloride	0.020 mg/kg	< 0.020	< 0.020	--	--
1,2-Dichloroethane	0.020 mg/kg	< 0.020	< 0.020	--	--
Trichloroethene	0.020 mg/kg	**0.12**	< 0.020	--	--
1,2-Dichloropropane	0.020 mg/kg	< 0.020	< 0.020	--	--
Bromodichloromethane	0.020 mg/kg	< 0.020	< 0.020	--	--
2-Chloroethyl vinyl ether	0.020 mg/kg	< 0.020	< 0.020	--	--
cis-1,3-Dichloropropene	0.020 mg/kg	< 0.020	< 0.020	--	--
trans-1,3-Dichloropropene	0.020 mg/kg	< 0.020	< 0.020	--	--
1,1,2-Trichloroethane	0.020 mg/kg	< 0.020	< 0.020	--	--
Tetrachloroethene	0.020 mg/kg	**0.15**	< 0.020	--	--
Dibromochloromethane	0.020 mg/kg	< 0.020	< 0.020	--	--
Chlorobenzene	0.020 mg/kg	< 0.020	< 0.020	--	--
Bromoform	0.020 mg/kg	< 0.020	< 0.020	--	--
1,1,2,2-Tetrachloroethane	0.020 mg/kg	< 0.020	< 0.020	--	--
1,3-Dichlorobenzene	0.020 mg/kg	< 0.020	< 0.020	--	--
1,4-Dichlorobenzene	0.020 mg/kg	< 0.020	< 0.020	--	--
1,2-Dichlorobenzene	0.020 mg/kg	< 0.020	< 0.020	--	--
BFB (surrogate)	-- %	77.4	70.4	--	--

Notes:

Dilution Factor:

Dilution factor indicates the adjustments made for sample dilution.

EPA 8010A:

"Test Methods for Evaluating Solid Waste, Physical/Chemical Methods", SW-846, Third Edition including promulgated Update 1. Bromofluorobenzene surrogate recovery acceptability limits are 60 - 140 %.

C5050136-22:

Extracted 5/19/95 at 11:12.

C5050136-23:

GTEL Concord, CA
C5050136:1

GTEL ENVIRONMENTAL LABORATORIES, INC.

GTEL Client ID: 023300118
Login Number: C5050136
Project ID (number): 023300118
Project ID (name): Maricopa RIFS/3rd Ave & Lincoln, Phoenix, AZ

ANALYTICAL RESULTS

Volatile Organics
Method: EPA 8010A
Matrix: Solids

GTEL Sample Number	C5050136-22	C5050136-23	--	--		
Client ID	EW01-60	FIELD BLANK 2 (5/19)	--	--		
Date Sampled	05/19/95	05/19/95	--	--		
Date Analyzed	05/25/95	05/25/95	--	--		
Dilution Factor	1.00	1.00	--	--		

Analyte	Reporting Limit	Units	Concentration:Wet Weight			

Notes: (continued)

Extracted 5/19/95 at 11:49.

GTEL ENVIRONMENTAL LABORATORIES, INC.

Client Number: 023300118
Project ID: Maricopa RIFS
3rd Ave & Lincoln
Phoenix, AZ
Work Order Number: C5-05-0136

QA/QC Narrative

Method: 8010

1.0 Sample Handling

1.1 Sample handling and holding time criteria were met for 22 out of 23 samples.

1.2 Sample 136-11 received with low methanol volume. Sample was re-extracted and re-analyzed and results confirmed. Extracted 05/18/95 at 10:06. Re-extraction done 05/31/95 at 15:15.

2.0 Initial Calibration Vertification

2.1 The criteria for the calibration vertification QC Check Sample was exceeded for 0 samples.

3.0 Method Blanks

3.1 Zero target analytes were found in the method blank.

4.0 Matrix Spike (MS) Accuracy

4.1 The recovery limits were exceeded in the matrix spike for 0 analyte.

5.0 Sample Duplicate Precision

5.1 The maximum percent difference (RPD) was exceeded for 0 analytes in the duplicate samples.

6.0 Laboratory Control Sample

6.1 The recovery limits were not met for 0 analytes in the Laboratory Control Sample.

GTEL, Concord, CA is certified by the State of Arizona under Certification Number AZ0507. A formal Quality Assurance/Quality Control (QA/QC) program is maintained by GTEL, which is designed to meet or exceed the EPA requirements. Analytical work for this project met QA/QC criteria unless otherwise stated in the narrative above.

Rashmi Shah
Laboratory Director

GTEL Concord, CA
C5050136.CMT:1

GTEL ENVIRONMENTAL LABORATORIES, INC.

GTEL ENVIRONMENTAL LABORATORIES, INC.

4080 PIKE LANE, SUITE C
CONCORD, CA 94520
(510) 685-7852
(800) 423-7143

CHAIN-OF-CUSTODY RECORD AND ANALYSIS REQUEST

37519

Company Name: GTI
Phone #: 602 966 0808
FAX #: 602 894 0955
Company Address: 1100 E University Ste 116 Tempe AZ 85281
Site Location: 320 W Lincoln St Phoenix AZ
Project Manager: D Ken Greene
Client Project ID: (#) 023300118
(NAME) MCMMF
I attest that the proper field sampling procedures were used during the collection of these samples.
Sampler Name (Print): Mary Dytrych.

Field Sample ID	GTEL Lab # (Lab Use only)	# CONTAINERS	Matrix: WATER	SOIL	AIR	SLUDGE	PRODUCT	OTHER	Method Preserved: HCl	HNO_3	H_2SO_4	ICE	UNPRESERVED	OTHER (Specify)	Sampling: DATE	TIME	BTEX 602 ☐ 8020 ☐ with MTBE ☐	BTEX/Gas Hydrocarbons PID/FID ☐ with MTBE ☐	Hydrocarbons GC/FID Gas ☐ Diesel ☐ Screen ☐	Hydrocarbon Profile (SIMDIS) ☐	Oil and Grease 413.1 ☐ 413.2 ☐ SM-503 ☐	TPH/IR 418.1 ☐ SM 503 ☐	EDB by 504 ☐ DBCP by 504 ☐	EPA 503.1 ☐ EPA 502.2 ☐	EPA 601 ☐ EPA 8010 ☐	EPA 602 ☐ EPA 8020 ☐	EPA 608 ☐ 8080 ☐ PCB only ☐	EPA 624/PPL ☐ 8240/TAL ☐ NBS (+15) ☐	EPA 625/PPL ☐ 8270/TAL ☐ NBS (+25) ☐	EPA 610 ☐ 8310 ☐	EP TOX Metals ☐ Pesticides ☐ Herbicides ☐	TCLP Metals ☐ VOA ☐ Semi-VOA ☐ Pest ☐ Herb ☐	EPA Metals - Priority Pollutant ☐ TAL ☐ RCRA ☐	CAM Metals TTLC ☐ STLC ☐	Lead 239.2 ☐ 200.7 ☐ 7420 ☐ 7421 ☐ 6010 ☐	Organic Lead ☐	Corrosivity ☐ Flash Point ☐ Reactivity ☐	OTHER
PZ1-45'	-01	1		✓	✓										5-17-95	1315									✓															
Field Blank 1	-02	1						✓							5-17-95	0930									✓															
Trip Blank	-03	1						✓							5-17-95	0921									✓															
PZ1-55	-04	1		✓											5-17-95	1350									✓															
PZ1-60	-05	1		✓											5-17-95	1400									✓															
Field Blk 2	-06	1						✓							5-17-95	1430									✓															

TAT
Priority (24 hr) ☐
Expedited (48 hr) ☐
7 Business Days ☐
Other ____
Business Days ☐

Special Handling
GTEL Contact ____
Quote/Contract # ____
Confirmation # ____
P.O. # ____

QA/QC Level
Blue ☐ CLP ☐ Other ☐

SPECIAL DETECTION LIMITS

SPECIAL REPORTING REQUIREMENTS
FAX ☐

REMARKS: Methanol Preserved. MeOH Field extraction MLZ extracts sent only samples in Tempe
C5050136
Blanks (Field/Trip) 10 mls MeOH

Lab Use Only Lot #:
5°C
Storage Location
Work Order #:

CUSTODY RECORD

	Date	Time		
Relinquished by Sampler:	5/17/95	2:42pm	Received by:	5/17/95
Relinquished by:	5/17/95	1550	Received by:	
Relinquished by: AIRBORNE #	5/18/95	10:30	Received by Laboratory: Waybill #	

GTEL ENVIRONMENTAL LABORATORIES, INC.

4080 PIKE LANE, SUITE C
CONCORD, CA 94520
(510) 685-7852
(800) 423-7143

CHAIN-OF-CUSTODY RECORD AND ANALYSIS REQUEST

37520

Company Name: GTI
Phone #: 602 966-0808
FAX #: 602 894-0955

Company Address: 1100 E University Ste 116 Tempe AZ 85281
Site Location: MCMMF Phx AZ 320 W Lincoln St

Project Manager: Dr. Ken Greene
Client Project ID: (#) 023300118
(NAME) MCMMF

I attest that the proper field sampling procedures were used during the collection of these samples.
Sampler Name (Print): MARY DYTRYCH

Field Sample ID	GTEL Lab # (Lab Use only)	# CONTAINERS	Matrix: WATER	SOIL	AIR	SLUDGE	PRODUCT	OTHER	Method Preserved: HCl	HNO_3	H_2SO_4	ICE	UNPRESERVED	OTHER (Specify)	Sampling: DATE	TIME	BTEX 602 ☐ 8020 ☐ with MTBE ☐	BTEX/Gas Hydrocarbons PID/FID ☐ with MTBE ☐	Hydrocarbons GC/FID Gas ☐ Diesel ☐ Screen ☐	Hydrocarbon Profile (SIMDIS) ☐	Oil and Grease 413.1 ☐ 413.2 ☐ SM-503 ☐	TPH/IR 418.1 ☐ SM 503 ☐	EDB by 504 ☐ DBCP by 504 ☐	EPA 503.1 ☐ EPA 502.2 ☐	EPA 601 ☐ EPA 8010 ☒	EPA 602 ☐ EPA 8020 ☐	EPA 608 ☐ 8080 ☐ PCB only ☐	EPA 624/PPL ☐ 8240/TAL ☐ NBS (+15) ☐	EPA 625/PPL ☐ 8270/TAL ☐ NBS (+25) ☐	EPA 610 ☐ 8310 ☐	EP TOX Metals ☐ Pesticides ☐ Herbicides ☐	TCLP Metals ☐ VOA ☐ Semi-VOA ☐ Pest ☐ Herb ☐	EPA Metals - Priority Pollutant ☐ TAL ☐ RCRA ☐	CAM Metals TTLC ☐ STLC ☐	Lead 239.2 ☐ 200.7 ☐ 7420 ☐ 7421 ☐ 6010 ☐	Organic Lead ☐	Corrosivity ☐ Flash Point ☐ Reactivity ☐
Trip Blank	-07	1						✓						*	5-18-95	0837									✓											
Field Blank	-08	1						✓							"	0839									✓											
VW1-10	-09	1		✓											"	0930									✓											
VW1-18	-10	1		✓											"	0935									✓											
VW1-28	-11	1		✓											"	0955									✓											
VW1-38	-12	1		✓											"	1010									✓											
VW1-48	-13	1		✓											"	1040									✓											
Field Blank	-14	1						✓							"	1052									✓											

TAT
Priority (24 hr) ☐
Expedited (48 hr) ☐
7 Business Days ☐
Other ____
Business Days ☐

Special Handling
GTEL Contact ____
Quote/Contract # ____
Confirmation # ____
P.O. # ____

SPECIAL DETECTION LIMITS

REMARKS: Field extraction - C5050136 MLZ
*Methanol preservation

SPECIAL REPORTING REQUIREMENTS

Lab Use Only Lot #:
Storage Location
Work Order #:

QA/QC Level
Blue ☐ CLP ☐ Other ☐ ____
FAX ☐

CUSTODY RECORD

	Date	Time		
Relinquished by Sampler: [signature]	5/18/95	10:50	Received by: [signature]	5/18/95
Relinquished by: [signature]	5/18/95	11:52	Received by:	
Relinquished by:			Received by Laboratory:	

Field Blank

Waybill #