ARIZONA DEPARTMENT OF ENVIRONMENTAL QUALITY

1110 West Washington Street • Phoenix, Arizona 85007-2935
(602) 771-2300 • www.azdeq.gov

Janet Napolitano
Governor

Stephen A. Owens
Director

January 31, 2007

~~CERTIFIED MAIL~~ Hand Delivered
~~RETURN RECEIPT REQUESTED~~

COPY

Gregg St. Clair, Cement Operations Manager
Phoenix Cement Company
PO Box 428
Clarkdale, AZ 86324

FILE

Dear Mr. St. Clair:

Subject: Air Quality Control Permit No. 35426
Portland Cement Plant and Quarry - Place ID: 2393

The Arizona Department of Environmental Quality has received payment of the fee requested. Enclosed is a permit for the referenced facility. In accordance with Arizona Revised Statutes, §49-430, this permit should be readily available at all times on the premises.

The permit is issued for a period of five years. Please keep us informed of any changes that would affect your air pollution status during the period of this permit.

You are advised that a permit is a legally enforceable document. If your facility fails to comply with the provisions contained in its permit, you will be subject to enforcement action and could incur civil fines of up to ten thousand dollars per day under A.R.S. §49-463 and/or be subject to criminal penalties in accordance with A.R.S. §49-464.

If you have any questions, please do not hesitate to contact me at (602) 771-2308, or Mr. Trevor Baggiore at (602) 771-2321.

Sincerely,

Nancy C. Wrona, Director
Air Quality Division

NCW: zfl

FILE

ARIZONA DEPARTMENT OF ENVIRONMENTAL QUALITY

AIR QUALITY CONTROL
PERMIT NUMBER 35426

COPY

Has been issued to **Phoenix Cement Company**

3000 West Cement Plant Road

Clarkdale, Arizona 86324

For operation of **Portland Cement Plant and Quarry**

Subject to terms and conditions therein and all applicable Arizona Revised Statutes and the Arizona Administrative Code.

ARIZONA DEPARTMENT OF ENVIRONMENTAL QUALITY

Number: **35426**

Issued: January 31, 2007

Expires: January 31, 2012

Nancy C. Wrona, Director, Air Quality Division

TO BE FRAMED AND DISPLAYED IN A CONSPICUOUS PLACE

COPY FILE

ARIZONA DEPARTMENT OF ENVIRONMENTAL QUALITY
Air Quality Division
1110 W. Washington Street ▪ Phoenix, AZ 85007 ▪ Phone: (602) 771-2338

AIR QUALITY CONTROL PERMIT

(As required by Title 49, Chapter 3, Article 2, Section 49-426, Arizona Revised Statutes)

This air quality control permit does not relieve applicant of responsibility for meeting all air pollution regulations

1. PERMIT TO BE ISSUED TO (Business license name of organization that is to receive permit)

Phoenix Cement Company

2. NAME (OR NAMES) OF OWNER OR PRINCIPALS DOING BUSINESS AS THE ABOVE ORGANIZATION

Salt River Pima-Maricopa Indian Community d.b.a. Phoenix Cement Company

3. MAILING ADDRESS **P.O. Box 428**
Number Street

Clarkdale, Arizona 86324
City or Community State Zip Code

4. ORIGINAL EQUIPMENT LOCATION/ADDRES **3000 West Cement Plant Road**
Number Street

Clarkdale, Yavapai County, Arizona 86324
City or Community State Zip Code

5. FACILITIES OR EQUIPMENT DESCRIPTION **Portland Cement Plant and Quarry**

6. THIS PERMIT ISSUED SUBJECT TO THE FOLLOWING ***Conditions contained in Attachments "A" through "E"***

7. ADEQ SIGNIFICANT REVISION NUMBER **35426** PERMIT CLASS **I**

SIGNIFICANT REVISION ISSUED THIS **31st** DAY OF **January**, ***2007***

SIGNATURE

Nancy C. Wrona, Director, Air Quality Division
TITLE

FILE

TECHNICAL REVIEW AND EVALUATION OF APPLICATION FOR AIR QUALITY PERMIT NO. 35426

COPY

I. INTRODUCTION

This permit is a significant permit revision of the Title V Air Quality Control Permit (AQCP) No. 1001785 issued on June 26, 2002 to Phoenix Cement Company (PCC), the Permittee, for operation of its Portland cement manufacturing plant located in Yavapai County, Arizona. The purpose of this significant revision is to include into the Title V permit, the equipment associated with Kiln 4 modernization project requested by PCC in its application for Permit No. 1001717, which was subsequently issued on February 26, 2002. The modernization brought forth primarily the installation and operation of a five-stage, suspension pre-heater with in-line calciner (ILC), rotary kiln, in-line raw mill/coal mill, clinker cooler, Onoda-Kobe (OK) finish mill, and clinker storage domes. PCC had permanently retired all existing kilns, namely, Kilns 1, 2 and 3 as a result of the modernization. This permit revision will void and supersede all previously issued operating permits.

A. Company Information

Facility Name: Phoenix Cement Company (PCC)

Facility Address: 3000 West Cement Plant Road, Clarkdale, Arizona 86324

B. Background

The Arizona Department of Environmental Quality (ADEQ) issued a Title V permit, AQCP No. 1001785, to PCC on June 27, 2002 for operation of its Portland cement plant at Clarkdale. This permit only pertains to then the existing Kilns 1-3 operation and does not contain the applicable requirements for the Kiln 4 modernization project. The three previous kiln systems have since then been shut down permanently and Kiln 4 been operated at its full capacity. PCC submitted this significant revision permit application on February 14, 2005 and subsequently on June 30, 2006 for revision of AQCP No. 1001785 to include equipment associated with the Kiln 4 modernization project.

C. Attainment Classification

The air quality control region in which the subject facility is located is classified as being in attainment of the National Ambient Air Quality Standards (NAAQS) for all criteria pollutants including: particulate matter less than 10 microns (PM_{10}), nitrogen dioxide (NOx), sulfur dioxide (SO_2), carbon monoxide (CO), and ozone (O_3).

II. PROCESS DESCRIPTION

At the PCC facility, cement is produced from various types of rock, including limestone, volcanic ash, and mill scale. First, limestone and other types of rock are blasted and transported by haul trucks from the quarry to the primary crusher or to stockpiles. Crushed rock is routed to surge piles for subsequent transfer to the secondary crusher. The secondary crusher is used in conjunction with feeders and screens to further reduce the size of the rock before it is sent to the raw mill storage bays.

The crushed rock is conveyed from the storage bays to the raw mill for grinding via the rock bin, elevator, and separator. Meal-size material from the raw mill is transported to the blending system which is composed of two blending silos and one homogenizing silo. The in-line raw

mill applies residual heat from the preheater flue whereas the existing separator and raw mill each have a dryer that supplies heated air. From the blending system, the meal is pumped via the alleviator into three bins from which the meal is discharged into the respective kilns.

The heart of the Portland cement manufacturing process is the pyroprocessing system, a cement kiln. PCC modernized its cement plant by replacing the three previous kiln systems (Kilns 1-3) with the state-of-the-art rotary kiln (Kiln 4) equipped with a F.L. Smidth five-stage, suspension preheater and in-line calciner. This system transforms the raw mix into clinker, which is a gray, glass-hard, spherically shaped nodule. The chemical reactions and physical processes that constitute the transformation are quite complex, but they can be conceptually divided into four stages, as a function of the location and temperature in the rotary kiln.

- Evaporation of uncombined water from raw materials as material temperature increases to 212 °F;
- Dehydration, as the material temperature increases from 212 °F to approximately 800 °F to form oxides of silicon, aluminum, and iron;
- Calcination, during which carbon dioxide (CO_2) is evolved, between 1,650 °F and 1,800 °F to form free lime (CaO); and
- Reaction of the oxides in the burning zone of the rotary kiln to form cement clinker at temperatures of approximately 2,750 °F.

The indirect-fired modern kiln burns a blend of coal and pet-coke. Coal and pet-coke are stored in separate piles from which each is conveyed into a shared crusher for crushing. The crushed coal or coke is sent to either coal bin or pet-coke bin that feeds a coal roller mill in certain blend ratio. The milled fuel blend is then sent to one of the two pulverized fuel bins for storage before being air-conveyed into the burning zone of the kiln.

Clinker discharges from the kiln into a clinker cooler. Clinker is removed from the clinker cooler by drag chains and moveable grates onto a common conveyor belt that transports it to two clinker storage domes.

III. PROJECT EMISSION INVENTORY AND EMISSIONS NETTING

PCC calculated for various air pollutants, the post-modernization potential to emit (PTE) and the pre-modernization actual emissions for the calendar years 1999 and 2000. These calculations are presented in Tables 1 through 15 of the application. Table III summarizes the plant wide total of the post- and pre-modernization emissions and the emissions netting for the modernization project. As noted, the baseline emissions for the netting are the two-year average of the pre-modernization actual emissions for calendar years 1999 and 2000.

Table III. Emissions Netting Summary (*Negative sign indicates net emissions decrease)

Pollutant	Baseline Emissions (a) (tons/year)	Potential to Emit (b) (tons/year)	Net Emissions*(b)-(a) (tons/year)	Net Emission Increase (Yes/No)
PM	910	773	-138	No
PM_{10}	544	460	-84	No
SO_2	402	401	-1	No
NOx	3272	3,271	-1	No
CO	765	764	-1	No
VOC	21.4	41.5	20.1	Yes
Lead	0.025	0.048	0.023	Yes
Fluorides	0.30	0.58	0.28	Yes

IV. APPLICABLE REQUIREMENTS

The facility is a major stationary source as defined by A.A.C. R18-2-101(64)(c) because it has the potential to emit (PTE) greater than 100 tons per year for carbon monoxide (CO), nitrogen oxide (NOx), sulfur dioxide (SO_2), particulate matter (PM), and particulate matter nominally less than 10 microns (PM-10). The facility is also a major source of hazardous air pollutants (HAPs) as defined by A.A.C. R18-2-101(64)(b)(i) because it has the potential to emit in the aggregate, 10 tons per year (tpy) or more of a single HAP, or 25 tpy or more of multiple HAPs combined. As a major source, the facility is subject to all the following applicable requirements:

A. Maximum Available Control Technology (MACT)

Title 40, Part 63, Subpart LLL of the Code of Federal Regulations (CFR), National Emission Standards for Hazardous Air Pollutants from the Portland Cement Manufacturing Industry, is applicable to Kiln 4 and associated equipment upon startup. The applicable requirements associated with this standard include the applicable provisions of the MACT General Provisions, 40 CFR Part 63, and the following:

§63.1343, "Standards for Kilns and In-Line Kiln/Raw Mills," establishes the following limits:

- A particulate matter emission limit of 0.15 kg per mg (0.30 lb per ton);
- An opacity limit of 20%; and
- A dioxins/furans limit of 0.20 ng per dscm (8.7×10^{-11} gr per dscf) (toxicity equivalents (TEQ)) corrected to seven percent oxygen, or 0.40 ng per dscm (1.7×10^{-10} gr per dscf) (TEQ) corrected to seven percent oxygen when the average of the performance test run average temperatures at the inlet to the particulate matter control device (PMCD) is 204°C (400°F) or less.

§63.1344, "Operating Limits for Kilns and In-Line Kiln/Raw Mills," establishes an applicable temperature limit for the in-line kiln/raw mill, i.e. Kiln 4, when the raw mill is operating and when it is not.

§63.1345, "Standards for Clinker Coolers," establishes the following limits for the clinker coolers:

- A particulate matter emission limit of 0.050 kg per mg (0.10 lb per ton); and
- An opacity limit of 10 percent.

§63.1346, "Standards for New and Reconstructed Raw Material Dryers," establishes an opacity limit of 10 percent for the raw material dryers.

§63.1347, "Standards for Raw and Finish Mills," establishes an opacity limit of 10 percent for the raw and finish mills.

§63.1348, "Standards for Affected Sources other than Kilns; In-Line Kiln/Raw Mills; Clinker Coolers; New and Reconstructed Raw Material Dryers; and Raw and Finish Mills," establishes an opacity limit of 10 percent for emissions from any raw material,

clinker, or finished product storage bin, conveying system transfer point, bagging system, and bulk loading or unloading system.

§63.1349, "Performance Testing Requirements," establish the following:

- Within 180 days of startup, initial compliance with the emission standards shall be demonstrated. The performance test plan shall be available to the Director prior to testing, and the results shall be documented in complete test reports.
- For Kiln 4, compliance with the particulate matter emission standards shall be demonstrated using EPA Reference Method 5 with an average of three separate runs which are each at least one hour in length at the highest capacity reasonably expected to occur. Tests shall be performed when the raw mill of the in-line kiln/raw mill is under normal operating conditions and when it is not operating.
- Compliance with the dioxins/furans emission standards shall be demonstrated using EPA Reference Method 23 with an average of three separate runs which are at least three hours in length at the highest capacity reasonably expected to occur. For Kiln 4, tests shall be performed when the raw mill of the in-line kiln/raw mill is under normal operating conditions and when it is not operating.
- Performance tests shall be repeated every five years except for the required initial performance test of opacity for the kiln or clinker cooler. Annual PM testing is required consistent with the Arizona Testing Manual.
- Dioxin/furan performance tests shall be repeated every 30 months.
- For the kiln, a particulate matter and dioxin/furan performance test shall be repeated within 90 days of initiating any significant change in the feed or fuel from that of the previous performance test.

(Note: Initial performance testing was previously completed between January and April 2003 for the Kiln 4 modernization.)

§63.1350, "Monitoring Requirements," establish the following:

- A written operations and maintenance plan is required to be submitted to the Director for review and approval as part of a Title V permit application. Failure to comply with the plan will be deemed a violation of the standard.
- For Kiln 4, a continuous opacity monitor (COM) will be located at the outlet of the PM control device. It needs to be installed, maintained, calibrated, and operated in accordance with Subpart A of 40 CFR 63 and PS-1 of Appendix B of 40 CFR 60. The opacity standard is set at 20 percent on a 6-minute average.
- For Clinker Cooler, a COM will be located at the outlet of the PM control device. It needs to be installed, maintained, calibrated, and operated in accordance with Subpart A of 40 CFR 63 and PS-1 of Appendix B of 40 CFR 60. The opacity standard is set at 10 percent on a 6-minute average.
- For the raw mill or finish mill, a 6-minute daily visual emissions observation of the mill sweep and air separator PMCDs needs to be performed in accordance with EPA Reference Method 22 while operating at the highest capacity expected to occur within the day. If visual emissions are observed, corrective actions need to be taken and, within 24 hours, a 30-minute EPA Reference Method 9 test needs to be conducted for each stack in which visible emissions were observed.
- A continuous temperature monitor shall be used to record the temperature of the

exhaust gases from the kiln at the inlet to the kiln baghouse.

- An inspection of the components of the combustion system of the kiln shall be performed at least once per year.
- Opacity shall be monitored in accordance with the operations and maintenance plan.

§63.1353, "Notification Requirements," establish the following:

- Applicable notification provisions are listed in Table 1 to Subpart LLL in 40 CFR 63.
- Notification requirements in 40 CFR 63.9 shall be followed as follows:
  - Initial notification as required by 40 CFR 63.9(b) through (d) which can be made through a Title V permit application if it contains the same information;
  - Notification of performance tests as required by 40 CFR 63.7;
  - Notification of opacity and visible emission observations in accordance with 40 CFR 63.6(h)(5) and 40 CFR 63.9(f);
  - Notification, as required by 40 CFR 63.9(g), of the date that the continuous emission monitor (CEM) performance evaluation required by 40 CFR 63.8(e) is scheduled to begin; and
  - Notification of compliance status as required by 40 CFR 63.9(h)

§63.1354, "Reporting Requirements," establish the following:

- All reporting provisions are included in Table 1 to Subpart LLL in 40 CFR 63.
- Reports need to comply with the requirements specified in 40 CFR 63.10 as follows:
  - Report results of performance tests as a part of the notification of compliance status as required by 40 CFR 63.10(d)(2);
  - Report opacity results as required by 40 CFR 63.10(d)(3);
  - Progress reports as a condition of receiving an extension of compliance as required by 40 CFR 63.10(d)(4);
  - If actions during a start-up, shut down, or malfunction are consistent with the plan specified in 40 CFR 63.6(e)(3), a statement shall be made in a semi-annual report as required by 40 CFR 63.10(d)(5). Reports shall be submitted with the excess emissions and continuous monitoring system performance reports if a start-up, shut down, or malfunction occurred during the reporting period;
  - An immediate report shall be made within 2 working days if actions during a start-up, shut down, or malfunction are not consistent with the plan;
  - A written report of the results of the performance evaluation for the continuous monitoring system as required by 40 CFR 63.10(e)(2) shall be submitted simultaneously with the results of the performance test;
  - If applicable, report the results of the COM system performance evaluation conducted under 40 CFR 63.8(e) as required by 40 CFR 63.10(e)(2);
  - An excess emissions and continuous monitoring system (CMS) performance report for any event in which the data indicates the source is not in compliance shall be submitted as required by 40 CFR 63.10(e)(3);
  - A semi-annual summary report shall be submitted with the compliance certification which includes the information specified in 40 CFR 63.10(e)(3)(vi),

all exceedances of maximum control device inlet gas temperature limits, all failures to calibrate thermocouples and other temperature sensors, the results of any combustion system component inspections, and all failures to comply with any provision of the operation and maintenance plan; and

- An excess emissions and CMS performance report if the total continuous monitoring system down time for any CEM or any CMS for the reporting period is 10 percent or greater of the total operating time of the reporting period.

§63.1355, "Record Keeping Requirements," establish the following:

- All files, including reports and notifications, shall be retained for at least five years.
- Records shall be maintained and shall include documentation supporting initial notifications and notifications of compliance status, applicability determinations with supporting analyses, and any information demonstrating whether to source is meeting any requirements for a waiver or record keeping or reporting requirements.
- Records shall be maintained for all continuous monitoring systems as required by 40 CFR 63.10(c) and those mentioned above.

B. New Source Performance Standards (NSPS)

1. 40 CFR Part 60 Subpart F, Standards of Performance for Portland Cement Plants, is not applicable to the Kiln 4 system per 40 CFR 63.1356(a).

2. 40 CFR Part 60 Subpart Y, Standards of Performance for Coal Preparation Plants, is applicable for the coal preparation operations. The applicable requirements associated with these standards include the applicable provisions of the NSPS General Provisions, 40 CFR Part 60, Subpart A and the following:

§60.252, "Standards for Particulate Matter," establishes the following:

- A particulate matter emission limit of 0.70 g per dscm (0.031 gr per dscf) from the thermal dryer; and
- An opacity limit of 20% from the thermal dryer, any coal processing and conveying equipment, coal storage system, and coal transfer and loading system processing coal.

§60.253, "Monitoring of Operations," establishes the following:

- Installation, calibration, maintenance, and continuously operate a monitoring device for the measurement of the temperature of the gas stream at the exit of the thermal dryer within ± 3 degree Fahrenheit.
- All monitoring devices shall be re-calibrated annually in accordance with the procedures of 40 CFR 60.13(b).

§60.254, "Test Methods and Procedures," establish the following:

- When conducting performance tests required in 40 CFR 60.8, use reference methods and procedures in Appendix A of 40 CFR Part 60 except as provided in 40 CFR 60.8(b).

- Determine particulate matter standards and opacity compliance using EPA Reference Method 5 and Method 9, incorporating procedures in 40 CFR 60.11, respectively. For Method 5, the sampling time and volume for each run shall be at least 60 minutes and 0.85 dscm (30 dscf), respectively. Sampling should begin no less than 30 minutes after start-up and shall terminate prior to beginning shut-down procedures.

3. 40 CFR Part 60 Subpart OOO, Standards of Performance for Nonmetallic Mineral Processing Plants, is applicable for quarry operations if the equipment was manufactured or modified after August 31, 1983. The applicable requirements associated with these standards include the applicable provisions of the NSPS General Provisions, 40 CFR Part 60, Subpart A and the following:

   §60.672, "Standard for Particulate Matter," establishes the following:

   - A particulate matter emission limit of 0.05 g per dscm and an opacity limit of 7% of stack emissions from any transfer point on the belt conveyors, any other affected source, and any multiple storage bins with combined stack emissions;
   - An opacity limit of 10% of fugitive emissions from any transfer point on the belt conveyors or any other affected source;
   - An opacity limit of 15% of fugitive emissions from any crusher;
   - If the affected facility is enclosed in a building, there should be no visible emissions except emissions from a vent (defined in 40 CFR 60.671), and should meet the stack emission limits discuss in the first point above;
   - An opacity limit of 7% of stack emissions from any baghouse that controls emissions fro an individual, enclosed storage bin; and
   - No visible emissions are allowed for wet screening operations and subsequent screening operations, bucket elevators, and belt conveyors that process saturated material in the production line, and screening operations, bucket elevators, and belt conveyors in the production line downstream of wet mining operations.

   §60.675, "Test Methods and Procedures," establish the following:

   - When conducting performance tests required in 40 CFR 60.8, use reference methods and procedures in Appendix A of 40 CFR Part 60 except as provided in 40 CFR 60.8(b);
   - Use EPA Reference Method 9 and 40 CFR 60.11 to determine compliance with the opacity standards for fugitive emissions;
   - Use EPA Reference Method 9 to determine compliance with the opacity standards for stack emissions of particulate matter from any baghouse that controls emissions from an individual storage bin using ten 6-minute averages;
   - The duration of the EPA Reference Method 9 observations for determining compliance with the opacity limit for fugitive emissions from any transfer point on belt conveyors or from any other affected facility can be reduced from thirty 6-minute averages to ten 6-minute averages if no individual readings are greater

than 10 percent opacity and there are no more than 3 readings of 10 percent for the 1-hour period;

- The duration of the EPA Reference Method 9 observations for determining compliance with the opacity limit for fugitive emissions from any crusher at which a capture system is not used can be reduced from thirty 6-minute averages to ten 6-minute averages if no individual readings are greater than 15 percent opacity and there are no more than 3 readings of 15 percent for the 1-hour period;
- Use EPA Reference Method 22 to determine compliance with emissions from any transfer point on a conveyor belt or any other affected facility enclosed in a building with each side of the building and the roof being observed for at least 15 minutes;
- Use the highest fugitive opacity standard applicable to any individual affected facility for the combined emission stream or separate the emissions so that the opacity from each affected facility can be read if emissions from two or more facilities continuously interfere so that the opacity of fugitive emissions from individual affected facilities cannot be read;
- Submit a notice to the Director at least 7 days prior to any rescheduled performance test if a performance test is delayed; and
- Initial EPA Reference Method 9 tests are not required for wet screening operations and subsequent screening operations, bucket elevators, and belt conveyors that process saturated material in the production line, and screening operations, bucket elevators, and belt conveyors in the production line downstream of wet mining operations.

§60.676, "Reporting and Recordkeeping," establish the following:

- Submit information to the Director about the existing facility being replaced and the replacement piece of equipment for any crusher, grinding mill, bucket elevator, bagging operation, enclosed truck or railcar loading station, screening operation, conveyor belt, and storage bin;
- Submit written reports of the results of all performance tests; and
- Submit a report of a change in processing saturated material to unsaturated material within 30 days following the change and the screening operation, bucket elevator, or belt conveyor is then subject to a 10 percent opacity limit and the emission test requirements of 40 CFR 60.11 and those within the permit, or submit a report of a change in processing unsaturated material to saturated material within 30 days following the change and the screening operation, bucket elevator, or belt conveyor are subject to a no visible emission limit.

C. Compliance Assurance Monitoring (CAM)

40 CFR 64, Compliance Assurance Monitoring, requires monitoring for the various particulate matter sources which have an uncontrolled potential to emit (PTE) greater than 100 tons per year. The CAM plan is discussed in detail in Section V herein.

D. Emissions from Non-Point Sources

Title 18, Chapter 2, Article 6 of the Arizona Administrative Code establishes restrictions on emissions from non-point sources. The following provisions are incorporated into the proposed permit:

- A.A.C. R18-2-602 prohibits open outdoor fires;
- A.A.C. R18-2-604 through A.A.C. R18-2-607 restricts fugitive dust emissions from such sources as open areas, parking lots, roadways and streets, material handling operations, and storage piles; and
- A.A.C. R18-2-612 limits opacity of visible emissions from non-point sources to 40 percent.

E. Existing Stationary Source Performance Standards

Title 18, Chapter 2, Article 7 of the Arizona Administrative Code establishes restrictions on emissions from stationary sources. The following provisions are incorporated into the proposed permit:

- A.A.C. R18-2-702.B.1 limits the opacity of visible emissions to 20%.
- A.A.C. R18-2-716.B limits the amount of particulate matter emissions from the coal preparation operations using process weight rate equations.
- A.A.C. R18-2-730.A limits the amount of particulate matter emissions from unclassified point sources (i.e. those sources without any other applicable conditions from the NSPS, MACT, or other Existing Stationary Performance Standards) using process weight rate equations.
- A.A.C. R18-2-730.B states the total process weight from all similar units with a similar process shall be used when determining particulate matter emissions.
- A.A.C. R18-2-730.D states gaseous or odorous materials shall not be released in such quantities or concentrations as to cause air pollution.

F. Emissions from Mobile Sources (New and Existing)

Title 18, Chapter 2, Article 8 of the Arizona Administrative Code establishes restrictions on emissions from mobile sources other than motor vehicles and agricultural equipment. The following provisions are incorporated into the proposed permit:

- A.A.C. R18-2-804 limits opacity of visible emissions from roadway and site-cleaning machinery to 40 percent and requires reasonable precautions against airborne particulate matter from site or roadway cleaning operations.

G. Voluntarily Accepted Permit Conditions

Title 18, Chapter 2, Article 3 of the Arizona Administrative Code establishes the option for a source to voluntarily accept emission limitations and standards in order to avoid federally applicable requirements. In this case, PCC has voluntarily accepted the following emission limits/caps and operation limitations in order to avoid triggering the Prevention of Significant Deterioration (PSD) requirements. The appropriate monitoring, record keeping, and reporting requirements have been included to ensure that the voluntarily accepted emission limitations and standards are met.

Facility-wide Emission Limits (rolling 12-month total):

- PM: 773 tons per year
- PM_{10}: 460 tons per year
- SO_2: 401 tons per year
- NOx: 3,271 tons per year
- CO: 764 tons per year
- VOC: 41.5 tons per year

Kiln 4/In-Line Raw Mill and Coal Mill Emission Limits (rolling 12-month total):

- NOx: 3,240 tons per year
- CO: 698 tons per year
- SO_2: 400 tons per year

Kiln 4/In-Line Raw Mill and Coal Mill Emission Limits (rolling 8-hour average):

- CO: 2.0 pounds per ton of clinker (lb/ton)

Quarry Explosives Usage:

- 913 tons per year (rolling 12-month total);
- 70 tons per calendar day; and
- 10 tons per hour

Fuel Usage:

- Up to 100 percent heat input from coal, #2 fuel oil or natural gas
- Up to 100 percent heat input from pet-coke

V. MONITORING AND COMPLIANCE DEMONSTRATION PROCEDURES

A. Continuous Emission Monitoring Systems (CEMS)

The permit requires that PCC install, calibrate, maintain, and operate CEMS on both the in-line raw mill stack (S-401) and the coal mill stack (S-453) for carbon monoxide (CO), nitrogen oxides (NOx) and sulfur dioxide (SO_2) emissions to continuously monitor compliance with the voluntarily accepted PSD netting out limits.

PCC is also required in this permit, pursuant to 40 CFR 63, Subpart LLL (Portland cement manufacturing MACT), to install, calibrate, maintain and operate a COM on in-line raw mill stack (S-401), coal mill stack (S-453), clinker cooler stack (S-402) and OK mill stack (S-350).

The PM CEMS is required but has been deferred in accordance with 40 CFR 63.1350(k) pending further rule-making by the USEPA. A recent inquiry to USEPA indicates there is no time frame at present to do a rulemaking to require PM CEMS for Portland cement kilns.

B. Compliance Assurance Monitoring (CAM)

Pursuant to A.A.C. R18-2-306.A.3.a and 40 CFR Part 64, a CAM plan is required for those emission units that are not affected sources under 40 CFR 63, Subpart LLL, that use an add-on control device to achieve compliance with an applicable emission limit or standard, and that have pre-control emissions greater than 100 tpy. PCC's Clarkdale cement plant currently does not have such CAM affected emission units.

C. Periodic Monitoring

Pursuant to A.A.C. R18-2-306.A.3.c, the significant revision for this facility must include periodic monitoring as gap filler if the applicable requirement does not require periodic testing or instrumental or non-instrumental monitoring. This monitoring must be sufficient to yield reliable data from the relevant time period that is representative of compliance with the applicable emission limitation or standard. It may include instrumental or non-instrumental monitoring, periodic emission testing, or record keeping designed to serve as monitoring. All periodic monitoring terms must assure the use of terms, test methods, units, averaging periods, and other statistical conventions consistent with the applicable emission limitation or standard.

For quarry and raw material crushing, coal preparation operations and cooling towers and other unclassified point sources, a periodic monitoring scheme is included in the permit to require PCC to conduct bi-weekly visual survey (Method 22 like) and if necessary, the opacity observation (Method 9) for stack and fugitive sources.

For the fugitive dust sources that consist of open areas, dry washes, or riverbeds, roadways and streets, material handling, storage piles, and roadway and site cleaning machinery, PCC is required to conduct a daily visual survey of fugitive dust emissions (Method 22 like) and if necessary, opacity observation (Method 9). In addition, PCC is required to operate in accordance with a fugitive dust plan.

VI. AMBIENT AIR QUALITY IMPACT ANALYSIS

A. Background

The modeling analysis is based on the Department's standard modeling review process for Class I/Class II sources. There are Class I/Class II areas near the PCC's Clarkdale operation. For example, located approximately 9 kilometers north-northeast of the PCC facility is the Sycamore Canyon Wilderness, a Class I area. The purpose of the modeling analysis is to determine whether air quality impacts from the potential criteria pollutant and the state toxic air contaminant emissions will cause or contribute to a violation of any air quality standard, or worsen an existing air quality problem. Applicable standards/ guidelines include the National Ambient Air Quality Standards (NAAQS) and the Arizona Ambient Air Quality Guidelines (AAAQGs).

B. Modeling Summary

The Industrial Source Complex Short-Term model (ISCST3) was used to complete the air dispersion modeling. ISCST3 is a steady-state, multiple-source, Gaussian dispersion model. It is the USEPA-preferred refined model for estimating impacts at receptors located in simple terrain and complex terrain (within 50 kilometer (km) of a source) due to emissions from complicated sources. The ISCST3 model is capable of calculating downwind ground-level concentrations due to point, area and volume, sources and can accommodate a large number of sources and receptors. ISCST3 incorporates algorithms for the simulation of aerodynamic downwash induced by buildings and can also address complex terrain using built-in model algorithms. The specific version of the ISCST3 used by PCC also incorporates algorithms modified by EPA Region X to allow credit for emissions reductions in complex terrain situations. For details regarding the model selection, model input options, source parameters for area sources, point sources and volume sources, receptor network and meteorological data, please review Section 5.0 of the application.

Additionally, visibility impacts were assessed using the latest version of VISCREEN. VISCREEN is a screening model that calculates the potential visual impact of a plume of specified emissions for specific transport and dispersion conditions. Visibility impacts were assessed for both PM_{10} and NOx, to compare plume perceptibility between the modernized facility and old configuration. Please review Subsection 5.6 for details.

C. Modeling Analysis Results

1. NAAQS

Modeling was made to verify that the facility modernization does not cause a violation of NAAQS for lead, CO, PM_{10}, SO_2, and NOx outside the facility's process boundary. Results of the modeling are presented in Table VI-1 below, which show that impact results for each pollutant plus the background concentrations are below the NAAQS for all applicable averaging periods.

Table VI-1. NAAQS Modeling Results

Pollutant	National Ambient Air Quality Standards						National Ambient Air Quality Standard Results					
	Pollutant Concentrations ($\mu g/m^3$) for Applicable Averaging Periods						Modeled Pollutant Concentrations Plus Background ($\mu g/m^3$) for Applicable Averaging Periods					
	1-hr	3-hr	8-hr	24-hr	Quarter	Annual	1-hr	3-hr	8-hr	24-hr	Quarter	Annual
CO	40000	n/a	10000	n/a	n/a	n/a	22225.5	n/a	4238.6	n/a	n/a	n/a
PM_{10}	n/a	n/a	n/a	150	n/a	50	n/a	n/a	n/a	92.3	n/a	41.0
SO_2	n/a	1300	n/a	365	n/a	80	n/a	260.1	n/a	64.1	n/a	3.02
NOx	n/a	n/a	n/a	n/a	n/a	100	n/a	n/a	n/a	n/a	n/a	4.1
Lead	n/a	n/a	n/a	n/a	1.5	n/a	n/a	n/a	n/a	n/a	0.003	n/a

2. Class I PSD Increment

Modeling was also made to verify that changing the emissions configuration, as part of the facility modernization, does not result in violations of Class I Area PSD increments (PM_{10}, SO_2, and NO_2) for the pollutants undergoing a net emissions rate decrease for all applicable averaging periods. Results of the modeling are presented in Table VI-2 below, which show that impacts on Class I area are below the Class I PSD increment levels for all applicable averaging periods.

Table VI-2. Class I PSD Increment Modeling Results

Pollutant	Class I PSD Increment Levels			Class I PSD Increment Results		
	Pollutant Concentrations ($\mu g/m^3$) for Applicable Averaging Periods			Modeled Pollutant Concentrations ($\mu g/m^3$) for Applicable Averaging Periods		
	3 hour	24 hour	Annual	3 hour	24 hour	Annual
PM_{10}	n/a	8	4	n/a	1.83	<0
SO_2	25	5	2	19.19	2.52	<0
NOx	n/a	n/a	2.5	n/a	n/a	<0

3. AAAQG

Modeling was also completed to verify that the facility modernization does not cause a violation of AAAQG outside the facility's process boundary. Results of the modeling presented in Table VI-4 below show that the impacts from associated air toxics outside the PCC process area boundary do not exceed AAAQG for all applicable averaging periods.

Table VI-3. AAAQG Modeling Results

Pollutant	Acceptable HAPs Concentration Levels For Applicable Averaging Periods			Modeling Results For Applicable Averaging Periods		
	1-hour $\mu g/m^3$	24-hour $\mu g/m^3$	Annual $\mu g/m^3$	1-hour $\mu g/m^3$	24-hour $\mu g/m^3$	Annual $\mu g/m^3$
Arsenic	2.80E-01	7.30E-02	2.00E-04	1.50E-03	1.10E-04	2.00E-05
Benzene	6.30E+02	5.10E+01	1.40E-01	1.73E-01	1.26E-02	2.60E-03
Benzo(a)anthracene	7.90E-01	2.10E-01	5.70E-04	0.00E+00	0.00E+00	0.00E+00
Benzo(a)pyrene	7.90E-01	2.10E-01	5.70E-04	0.00E+00	0.00E+00	0.00E+00
Beryllium	6.00E-02	1.60E-02	5.00E-04	2.91E-03	2.10E-04	4.00E-05
Cadmium	1.70E+00	1.10E-01	2.90E-04	1.70E-04	1.00E-05	0.00E+00
Chromium	1.11E+01	3.80E+00	N/A	1.08E-03	8.00E-05	-
Chromium VI	1.10E-01	2.90E-02	8.00E-05	1.62E-03	1.20E-04	2.00E-05
Copper	2.30E+00	7.50E-01	N/A	2.20E-03	1.60E-04	-
Dibenzo(a,h)anthracene	N/A	2.10E-01	5.70E-04	-	0.00E+00	0.00E+00
Formaldehyde	2.00E+01	1.20E+01	8.00E-02	4.97E-03	3.60E-04	7.00E-05
Hydrogen chloride	2.10E+02	5.60E+01	7.00E+00	2.65E-02	1.93E-03	4.00E-04
Manganese	2.50E+01	8.00E+00	N/A	5.12E-03	3.70E-04	-
Mercury	1.50E+00	4.00E-01	N/A	2.21E-03	1.60E-04	-
Naphthalene	6.30E+02	4.00E+02	N/A	1.87E-02	1.36E-03	-
Nickel	5.70E+00	1.50E+00	4.00E-03	1.50E-02	1.09E-03	2.30E-04
Selenium	6.00E+00	1.60E+00	N/A	2.19E-03	1.60E-04	-

4. Class II PSD Increment

Modeling was also completed to verify that the facility modernization does not cause a violation of Class II PSD Increments (PM_{10}, SO_2, and NO_2). Results of the modeling are given in Table VI-5 below, which show that impacts outside the process area boundary are below the Class II PSD increments for all applicable averaging periods.

Table VI-4. Class II PSD Increment Modeling Results

Pollutant	Class II PSD Increment Levels			Class II PSD Increment Results		
	Pollutant Concentrations ($\mu g/m^3$) for Applicable Averaging Periods			Modeled Pollutant Concentrations ($\mu g/m^3$) for Applicable Averaging Periods		
	3 hour	24 hour	Annual	3 hour	24 hour	Annual
PM_{10}	n/a	30	17	n/a	29.3	5.02
SO_2	512	91	20	217.13	47.13	0.016
NOx	n/a	n/a	25	n/a	n/a	0.14

5. Class I Significance

Modeling was also completed to verify that the net emissions rate increases for VOC, lead and fluorides do not cause ambient levels of these pollutants at receptors in the Sycamore Canyon Wilderness (Class I) Area to increase 1 microgram per cubic meter or more over any 24-hour period. Results of the modeling are presented in Table VI-5

below.

Table VI-5. Class I Significance Modeling Results

Pollutant	Class I PSD Significance Levels	Class I PSD Significance Results
	Pollutant Concentrations (μg/m³) for Applicable Averaging Period	Modeled Pollutant Concentrations (μg/m³) for Applicable Averaging Period
	24 hour	24 hour
VOC	1	0.23735
Fluorides	1	0.00321
Lead	1	0.00027

6. Visibility Impact

Additionally, modeling of visibility impact was made to verify that changing the emissions configuration as part of the facility modernization does not appreciably diminish or impair visibility, within the meaning of EPA's re-proposed BART rules at Federal Register 25184, 25194 (May 5, 2004) and final regional haze rules 64 Federal Register 35714, 35726 (July 1, 1999). Table VI-6 below presents the results of the modeling.

Table VI-6. Visibility Impact Modeling Results

View		Retired Facility Kilns 1-3 Visual Impact		Modernized Facility Kiln 4 Visual Impact		Net Impact Net Visual Impact of Kiln 4 Vs. Retired Kilns 1-3	
		Delta E	Contrast	Delta E	Contrast	Delta E	Contrast
Inside Class I Area	Sky View 1	42.887	0.647	41.127	0.546	-1.76	-0.101
	Sky View 2	21.285	-0.481	21.347	-0.455	0.062	-0.936
	Terrain View 1	59.218	0.416	55.147	0.374	-4.071	-0.042
	Terrain View 2	7.641	0.065	6.589	0.055	-1.052	-0.01
Outside Class I Area	Sky View 1	57.436	1.5	56.337	1.451	-1.099	-0.049
	Sky View 2	22.906	-0.634	22.442	-0.624	-0.464	-1.258
	Terrain View 1	75.964	0.812	75.325	0.805	-0.639	-0.007
	Terrain View 2	34.197	0.77	33.009	0.735	-1.188	-0.035

VII. LIST OF ABBREVIATIONS

AAC	Arizona Administrative Code
AAAQG	Arizona Ambient Air Quality Guideline
ADEQ	Arizona Department of Environmental Quality
BACT	Best Available Control Technology
CAM	Continuous Assurance Monitoring
CaO	Lime
CEMS	Continuous Emission Monitoring System
CFR	Code of Federal Regulations
CMS	Continuous Monitoring System
CO	Carbon Monoxide
CO_2	Carbon Dioxide
COM	Continuous Opacity Monitor
dscf	Dry Standard Cubic Feet
dscm	Dry Standard Cubic Meter
FLS	F L Smidth
g	Gram
gr	Grain
ILC	In-Line Calciner
ISCST	Industrial Source Complex Short-Term
kg	Kilogram
km	Kilometer
lb	Pound
MACT	Maximum Achievable Control Technology
mg	Milligrams
NAAQS	National Ambient Air Quality Standards
ng	Nanogram
NO_2	Nitrogen Dioxide
NSPS	New Source Performance Standards
O_3	Ozone
OK	Onoda-Kobe
PCC	Phoenix Cement Company
PM-10	Particulate Matter Nominally Less Than 10 Microns
PMCD	Particulate Matter Control Device
PSD	Prevention of Significant Deterioration
PTE	Potential-To-Emit
SO_2	Sulfur Dioxide
TAC	Toxic Air Contaminant
TEQ	Toxicity Equivalent
USEPA	United States Environmental Protection Agency

ARIZONA DEPARTMENT OF ENVIRONMENTAL QUALITY
CLASS I AIR QUALITY CONTROL PERMIT

COMPANY: Phoenix Cement Company
FACILITY: Portland Cement Plant
PERMIT NO: 35426
DATE ISSUED: January 31, 2007
EXPIRY DATE: January 31, 2012

FILE COPY

SUMMARY

This permit is a significant revision of the Title V Air Quality Control Permit (AQCP) No. 1001785 issued on June 26, 2002 to Phoenix Cement Company (PCC), the Permittee, for the operation of its Portland cement plant and quarry at 3000 West Cement Plant Road in Clarkdale, Arizona. The purpose of this significant revision is to include into the Title V permit, the equipment associated with Kiln 4 modernization project requested by PCC in its application for Permit No. 1001717, which was subsequently issued on February 26, 2002. The modernization brought forth primarily the installation and operation of a five-stage, suspension pre-heater with in-line calciner (ILC), rotary kiln, in-line raw mill/coal mill, clinker cooler, Onoda-Kobe (OK) finish mill, and clinker storage domes. To prevent triggering the Prevention of Significant Deterioration (PSD) requirements, PCC has voluntarily accepted the emission limits and emissions caps listed below:

Facility-wide Emission Limits (rolling 12-month total):

PM: 773 tons per year
PM_{10}: 460 tons per year
SO_2: 401 tons per year
NOx: 3,271 tons per year
CO: 764 tons per year
VOC: 41.5 tons per year

Kiln 4/In-Line Raw Mill and Coal Mill Emission Limits (rolling 12-month total):

NOx: 3,240 tons per year
CO: 698 tons per year
SO_2: 400 tons per year

Kiln 4/In-Line Raw Mill and Coal Mill Emission Limits (rolling 8-hour average):

CO: 2.0 pounds per ton of clinker (lb/ton)

Quarry Explosives Usage:

913 tons per year (rolling 12-month total), 70 tons per calendar day, and 10 tons per hour

The Permit is issued in accordance with Title 49, Chapter 3 of the Arizona Revised Statutes. All definitions, terms, and conditions used in the Permit conform to those in the Arizona Administrative Code R18-2-101 et. seq. (A.A.C.) and 40 Code of Federal Regulations (CFR), except as otherwise defined in the Permit. All terms and conditions in the Permit are enforceable by the Administrator of the U.S. Environmental Protection Agency. Issuance of the Permit voids and supersedes all previously issued operating permits.

TABLE OF CONTENTS

ATTACHMENT "A": GENERAL PROVISIONS 3
- I. PERMIT EXPIRATION AND RENEWAL 3
- II. COMPLIANCE WITH PERMIT CONDITIONS 3
- III. PERMIT REVISION, REOPENING, REVOCATION AND REISSUANCE, OR TERMINATION FOR CAUSE 3
- IV. POSTING OF PERMIT 4
- V. FEE PAYMENT 4
- VI. ANNUAL EMISSION INVENTORY QUESTIONNAIRE 4
- VII. COMPLIANCE CERTIFICATION 4
- VIII. CERTIFICATION OF TRUTH, ACCURACY AND COMPLETENESS 5
- IX. INSPECTION AND ENTRY 5
- X. PERMIT REVISION PURSUANT TO FEDERAL HAZARDOUS AIR POLLUTANT STANDARD 5
- XI. ACCIDENTAL RELEASE PROGRAM 6
- XII. EXCESS EMISSIONS, PERMIT DEVIATIONS, AND EMERGENCY REPORTING 6
- XIII. RECORD KEEPING REQUIREMENTS 9
- XIV. REPORTING REQUIREMENTS 10
- XV. DUTY TO PROVIDE INFORMATION 10
- XVI. PERMIT AMENDMENT OR REVISION 10
- XVII. FACILITY CHANGE WITHOUT A PERMIT REVISION 10
- XVIII. TESTING REQUIREMENTS 11
- XIX. PROPERTY RIGHTS 12
- XX. SEVERABILITY CLAUSE 13
- XXI. PERMIT SHIELD 13
- XXII. PROTECTION OF STRATOSPHERIC OZONE 13

ATTACHMENT "B": SPECIFIC CONDITIONS 14
- I. GENERAL REQUIREMENTS 14
- II. FACILITY-WIDE OPERATIONS GOVERNED BY VOLUNTARILY ACCEPTED PROVISIONS 15
- III. PORTLAND CEMENT OPERATIONS GOVERNED BY MAXIMUM AVAILABLE CONTROL TECHNOLOGY (MACT) STANDARDS 20
- IV. QUARRY AND RAW MATERIAL CRUSHING 33
- V. COAL PREPARATION OPERATIONS 40
- VI. COOLING TOWERS AND OTHER UNCLASSIFIED POINT SOURCES 45
- VII. FUGITIVE DUST SOURCES 47
- VIII. OTHER PERIODIC ACTIVITIES 49
- IX. AMBIENT MONITORING REQUIREMENTS 52

ATTACHMENT "C": EQUIPMENT LIST 57
- TABLE C-1: PROCESS EQUIPMENT 57
- TABLE C-2: CONTROL DEVICE 66

ATTACHMENT "D": DUST CONTROL PLAN 68
- I. INTRODUCTION 68
- II. CONTROL PLAN 68
- III. MONITORING 69

ATTACHMENT "E": OPERATION AND MAINTENANCE PLAN 70

ATTACHMENT "A": GENERAL PROVISIONS

Air Quality Control Permit No. 35426
For
Phoenix Cement Company

I. PERMIT EXPIRATION AND RENEWAL

[ARS §49-426.F, A.A.C. R18-2-304.C.2, and -306.A.1]

A. This permit is valid for a period of five years from the date of issuance.

B. The Permittee shall submit an application for renewal of this permit at least 6 months, but not more than 18 months, prior to the date of permit expiration.

II. COMPLIANCE WITH PERMIT CONDITIONS

[A.A.C. R18-2-306.A.8.a and b]

A. The Permittee shall comply with all conditions of this permit including all applicable requirements of the Arizona air quality statutes and air quality rules. Any permit noncompliance constitutes a violation of the Arizona Revised Statutes and is grounds for enforcement action; for permit termination, revocation and reissuance, or revision; or for denial of a permit renewal application. In addition, noncompliance with any federally enforceable requirement constitutes a violation of the Clean Air Act.

B. It shall not be a defense for a Permittee in an enforcement action that it would have been necessary to halt or reduce the permitted activity in order to maintain compliance with the conditions of this permit.

III. PERMIT REVISION, REOPENING, REVOCATION AND REISSUANCE, OR TERMINATION FOR CAUSE

[A.A.C. R18-2-306.A.8.c, -321.A.1, and -321.A.2]

A. The permit may be revised, reopened, revoked and reissued, or terminated for cause. The filing of a request by the Permittee for a permit revision, revocation and reissuance, termination, or of a notification of planned changes or anticipated noncompliance does not stay any permit condition.

B. The permit shall be reopened and revised under any of the following circumstances

1. Additional applicable requirements under the Clean Air Act become applicable to the Class I source. Such a reopening shall only occur if there are three or more years remaining in the permit term. The reopening shall be completed no later than 18 months after promulgation of the applicable requirement. No such reopening is required if the effective date of the requirement is later than the date on which the permit is due to expire, unless an application for renewal has been submitted pursuant to A.A.C. R18-2-322.B. Any permit revision required pursuant to this subparagraph shall comply with the provisions in A.A.C. R18-2-322 for permit renewal and shall reset the five-year permit term.

2. Additional requirements, including excess emissions requirements, become applicable to an affected source under the acid rain program. Upon approval by the Administrator, excess emissions offset plans shall be deemed to be incorporated into the Class I permit.

3. The Director or the Administrator determines that the permit contains a material mistake or that inaccurate statements were made in establishing the emissions standards or other terms or conditions of the permit.

4. The Director or the Administrator determines that the permit needs to be revised or revoked to assure compliance with the applicable requirements.

C. Proceedings to reopen and reissue a permit, including appeal of any final action relating to a permit reopening, shall follow the same procedures as apply to initial permit issuance and shall, except for reopenings under Condition III.B.1 above, affect only those parts of the permit for which cause to reopen exists. Such reopenings shall be made as expeditiously as practicable. Permit reopenings for reasons other than those stated in Condition III.B.1 above shall not result in a resetting of the five-year permit term.

IV. POSTING OF PERMIT [A.A.C. R18-2-315]

A. The Permittee shall post this permit or a certificate of permit issuance where the facility is located in such a manner as to be clearly visible and accessible. All equipment covered by this permit shall be clearly marked with one of the following:

1. Current permit number; or

2. Serial number or other equipment ID number that is also listed in the permit to identify that piece of equipment

B. A copy of the complete permit shall be kept on site.

V. FEE PAYMENT [A.A.C. R18-2-306.A.9 and -326]

The Permittee shall pay fees to the Director pursuant to ARS §49-426(E) and A.A.C. R18-2-326.

VI. ANNUAL EMISSION INVENTORY QUESTIONNAIRE [A.A.C. R18-2-327.A and B]

A. The Permittee shall complete and submit to the Director an annual emissions inventory questionnaire. The questionnaire is due by March 31st or ninety days after the Director makes the inventory form available each year, whichever occurs later, and shall include emission information for the previous calendar year.

B. The questionnaire shall be on a form provided by the Director and shall include the information required by A.A.C. R18-2-327.

VII. COMPLIANCE CERTIFICATION [A.A.C. R18-2-309.2.a, -309.2.c-d, and -309.5.d]

A. The Permittee shall submit a compliance certification to the Director semiannually, which describes the compliance status of the source with respect to each permit condition. The first certification shall be submitted no later than May 15th, and shall report the compliance status of the source during the period between October 1st of the previous year and March 31st of the current year. The second certification shall be submitted no later than November 15th, and shall report the compliance status of the source during the period between April 1st and September 30th of the current year.

The compliance certifications shall include the following:

1. Identification of each term or condition of the permit that is the basis of the certification;

2. Identification of the methods or other means used by the Permittee for determining the compliance status with each term and condition during the certification period;

3. The status of compliance with the terms and conditions of the permit for the period covered by

the certification, including whether compliance during the period was continuous or intermittent; The certification shall be based on the methods and means designated in Condition VII.A.2 above. The certifications shall identify each deviation and take into account for consideration in the compliance certification;

4. For emission units subject to 40 CFR Part 64, the certification shall also identify as possible exceptions to compliance any period during which compliance is required and in which an excursion or exceedance defined under 40 CFR Part 64 occurred;

5. All instances of deviations from permit requirements reported pursuant to Condition XII.B of this Attachment; and

6. Other facts the Director may require to determine the compliance status of the source.

B. A copy of all compliance certifications shall also be submitted to the EPA Administrator.

C. If any outstanding compliance schedule exists, a progress report shall be submitted with the semi-annual compliance certifications required in Condition VII.A above.

VIII. CERTIFICATION OF TRUTH, ACCURACY AND COMPLETENESS [A.A.C. R18-2-304.H]

Any document required to be submitted by this permit, including reports, shall contain a certification by a responsible official of truth, accuracy, and completeness. This certification shall state that, based on information and belief formed after reasonable inquiry, the statements and information in the document are true, accurate, and complete.

IX. INSPECTION AND ENTRY [A.A.C. R18-2-309.4]

A. Upon presentation of proper credentials, the Permittee shall allow the Director or the authorized representative of the Director to:

B. Enter upon the Permittee's premises where a source is located, emissions-related activity is conducted, or where records are required to be kept under the conditions of the permit;

C. Have access to and copy, at reasonable times, any records that are required to be kept under the conditions of the permit;

D. Inspect, at reasonable times, any facilities, equipment (including monitoring and air pollution control equipment), practices, or operations regulated or required under the permit;

E. Sample or monitor, at reasonable times, substances or parameters for the purpose of assuring compliance with the permit or other applicable requirements; and

F. Record any inspection by use of written, electronic, magnetic and photographic media.

X. PERMIT REVISION PURSUANT TO FEDERAL HAZARDOUS AIR POLLUTANT STANDARD [A.A.C. R18-2-304.C]

If this source becomes subject to a standard promulgated by the Administrator pursuant to Section 112(d) of the Act, then the Permittee shall, within twelve months of the date on which the standard is promulgated, submit an application for a permit revision demonstrating how the source will comply with the standard.

XI. ACCIDENTAL RELEASE PROGRAM [40 CFR Part 68]

If this source becomes subject to the provisions of 40 CFR Part 68, then the Permittee shall comply with these provisions according to the time line specified in 40 CFR Part 68.

XII. EXCESS EMISSIONS, PERMIT DEVIATIONS, AND EMERGENCY REPORTING

A. Excess Emissions Reporting [A.A.C. R18-2-310.01.A and -310.01.B]

1. Excess emissions shall be reported as follows:

   a. The Permittee shall report to the Director any emissions in excess of the limits established by this permit. Such report shall be in two parts as specified below:

      (1) Notification by telephone or facsimile within 24 hours of the time when the Permittee first learned of the occurrence of excess emissions including all available information from Condition XII.A.1.b below.

      (2) Detailed written notification by submission of an excess emissions report within 72 hours of the notification pursuant to Condition XII.A.1.a.(1) above.

   b. The report shall contain the following information:

      (1) Identity of each stack or other emission point where the excess emissions occurred;

      (2) Magnitude of the excess emissions expressed in the units of the applicable emission limitation and the operating data and calculations used in determining the magnitude of the excess emissions;

      (3) Date, time and duration, or expected duration, of the excess emissions;

      (4) Identity of the equipment from which the excess emissions emanated;

      (5) Nature and cause of such emissions;

      (6) If the excess emissions were the result of a malfunction, steps taken to remedy the malfunction and the steps taken or planned to prevent the recurrence of such malfunctions; and

      (7) Steps taken to limit the excess emissions; if the excess emissions resulted from start-up or malfunction, the report shall contain a list of the steps taken to comply with the permit procedures.

2. In the case of continuous or recurring excess emissions, the notification requirements of this section shall be satisfied if the source provides the required notification after excess emissions are first detected and includes in such notification an estimate of the time the excess emissions will continue. Excess emissions occurring after the estimated time period or changes in the nature of the emissions as originally reported shall require additional notification pursuant to Condition XII.A.1 above. [A.A.C. R18-2-310.01.C]

B. Permit Deviations Reporting [A.A.C. R18-2-306.A.5.b]

The Permittee shall promptly report deviations from permit requirements, including those attributable to upset conditions as defined in the permit, the probable cause of such deviations, and any corrective actions or preventive measures taken. Prompt reporting shall mean that the report was submitted to the Director by certified mail, facsimile, or hand delivery within two working days of the time when emission limitations were exceeded due to an emergency or within two working days of the time when the owner or operator first learned of the occurrence of a deviation from a permit requirement.

C. Emergency Provision [A.A.C. R18-2-306.E]

1. An "emergency" means any situation arising from sudden and reasonable unforeseeable events beyond the control of the source, including acts of God, that require immediate corrective action to restore normal operation, and that causes the source to exceed a technology-based emission limitation under the permit, due to unavoidable increases in emissions attributable to the emergency. An emergency shall not include noncompliance to the extent caused by improperly designed equipment, lack of preventative maintenance, careless or improper operation, or operator error.

2. An emergency constitutes an affirmative defense to an action brought for noncompliance with such technology-based emission limitations if Condition XII.C.3 is met.

3. The affirmative defense of emergency shall be demonstrated through properly signed, contemporaneous operating logs, or other relevant evidence that:

   a. An emergency occurred and that the Permittee can identify the cause(s) of the emergency;

   b. The permitted facility was being properly operated at the time;

   c. During the period of the emergency, the Permittee took all reasonable steps to minimize levels of emissions that exceeded the emissions standards or other requirements in the permit; and

   d. The Permittee submitted notice of the emergency to the Director by certified mail, facsimile, or hand delivery within two working days of the time when emission limitations were exceeded due to the emergency. This notice shall contain a description of the emergency, any steps taken to mitigate emissions, and corrective action taken.

4. In any enforcement proceeding, the Permittee seeking to establish the occurrence of an emergency has the burden of proof.

5. This provision is in addition to any emergency or upset provision contained in any applicable requirement.

D. Compliance Schedule [ARS §49-426.I.5]

For any excess emission or permit deviation that cannot be corrected with 72 hours, the Permittee is required to submit a compliance schedule to the Director within 21 days of such occurrence. The compliance schedule shall include a schedule of remedial measures, including an enforceable sequence of actions with milestones, leading to compliance with the permit terms or conditions that have been violated.

E. Affirmative Defenses for Excess Emissions Due to Malfunctions, Startup, and Shutdown [A.A.C. R18-2-310]

1. Applicability

This rule establishes affirmative defenses for certain emissions in excess of an emission standard or limitation and applies to all emission standards or limitations except for standards or limitations:

   a. Promulgated pursuant to Sections 111 or 112 of the Act;

   b. Promulgated pursuant to Titles IV or VI of the Clean Air Act;

   c. Contained in any Prevention of Significant Deterioration (PSD) or New Source Review (NSR) permit issued by the U.S. EPA;

   d. Contained in A.A.C. R18-2-715.F; or

e. Included in a permit to meet the requirements of A.A.C. R18-2-406.A.5

2. Affirmative Defense for Malfunctions

Emissions in excess of an applicable emission limitation due to malfunction shall constitute a violation. When emissions in excess of an applicable emission limitation are due to a malfunction, the Permittee has an affirmative defense to a civil or administrative enforcement proceeding based on that violation, other than a judicial action seeking injunctive relief, if the Permittee has complied with the reporting requirements of A.A.C. R18-2-310.01 and has demonstrated all of the following:

a. The excess emissions resulted from a sudden and unavoidable breakdown of process equipment or air pollution control equipment beyond the reasonable control of the Permittee;

b. The air pollution control equipment, process equipment, or processes were at all times maintained and operated in a manner consistent with good practice for minimizing emissions;

c. If repairs were required, the repairs were made in an expeditious fashion when the applicable emission limitations were being exceeded. Off-shift labor and overtime were utilized where practicable to ensure that the repairs were made as expeditiously as possible. If off-shift labor and overtime were not utilized, the Permittee satisfactorily demonstrated that the measures were impracticable;

d. The amount and duration of the excess emissions (including any bypass operation) were minimized to the maximum extent practicable during periods of such emissions;

e. All reasonable steps were taken to minimize the impact of the excess emissions on ambient air quality;

f. The excess emissions were not part of a recurring pattern indicative of inadequate design, operation, or maintenance;

g. During the period of excess emissions there were no exceedances of the relevant ambient air quality standards established in Title 18, Chapter 2, Article 2 of the Arizona Administrative Code that could be attributed to the emitting source;

h. The excess emissions did not stem from any activity or event that could have been foreseen and avoided, or planned, and could not have been avoided by better operations and maintenance practices;

i. All emissions monitoring systems were kept in operation if at all practicable; and

j. The Permittee's actions in response to the excess emissions were documented by contemporaneous records.

3. Affirmative Defense for Startup and Shutdown

a. Except as provided in Condition XII.E.3.b below, and unless otherwise provided for in the applicable requirement, emissions in excess of an applicable emission limitation due to startup and shutdown shall constitute a violation. When emissions in excess of an applicable emission limitation are due to startup and shutdown, the Permittee has an affirmative defense to a civil or administrative enforcement proceeding based on that violation, other than a judicial action seeking injunctive relief, if the Permittee has complied with the reporting requirements of A.A.C. R18-2-310.01 and has demonstrated all of the following:

(1) The excess emissions could not have been prevented through careful and prudent planning and design;

(2) If the excess emissions were the result of a bypass of control equipment, the bypass was unavoidable to prevent loss of life, personal injury, or severe damage to air pollution control equipment, production equipment, or other property;

(3) The air pollution control equipment, process equipment, or processes were at all times maintained and operated in a manner consistent with good practice for minimizing emissions;

(4) The amount and duration of the excess emissions (including any bypass operation) were minimized to the maximum extent practicable during periods of such emissions;

(5) All reasonable steps were taken to minimize the impact of the excess emissions on ambient air quality;

(6) During the period of excess emissions there were no exceedances of the relevant ambient air quality standards established in Title 18, Chapter 2, Article 2 of the Arizona Administrative Code that could be attributed to the emitting source;

(7) All emissions monitoring systems were kept in operation if at all practicable; and

(8) Contemporaneous records documented the Permittee's actions in response to the excess emissions.

b. If excess emissions occur due to a malfunction during routine startup and shutdown, then those instances shall be treated as other malfunctions subject to Condition XII.E.2 above.

4. Affirmative Defense for Malfunctions during Scheduled Maintenance

If excess emissions occur due to a malfunction during scheduled maintenance, then those instances will be treated as other malfunctions subject to Condition XII.E.2 above.

5. Demonstration of Reasonable and Practicable Measures

For an affirmative defense under Condition XII.E.2 or XII.E.3 above, the Permittee shall demonstrate, through submission of the data and information required by Condition XII.E and A.A.C. R18-2-310.01, that all reasonable and practicable measures within the Permittee's control were implemented to prevent the occurrence of the excess emissions.

XIII. RECORD KEEPING REQUIREMENTS [A.A.C. R18-2-306.A.4]

A. The Permittee shall keep records of all required monitoring information including, but not limited to, the following:

1. The date, place as defined in the permit, and time of sampling or measurements;

2. The date(s) analyses were performed;

3. The name of the company or entity that performed the analyses;

4. A description of the analytical techniques or methods used;

5. The results of such analyses; and

6. The operating conditions as existing at the time of sampling or measurement.

B. The Permittee shall retain records of all required monitoring data and support information for a period of at least 5 years from the date of the monitoring sample, measurement, report, or application. Support information includes all calibration and maintenance records and all original strip-chart recordings or other data recordings for continuous monitoring instrumentation, and

copies of all reports required by the permit.

C. All required records shall be maintained either in an unchangeable electronic format or in a handwritten logbook utilizing indelible ink.

XIV. REPORTING REQUIREMENTS [A.A.C. R18-2-306.A.5.a]

The Permittee shall submit the following reports:

A. Compliance certifications in accordance with Section VII of Attachment "A".

B. Excess emission; permit deviation, and emergency reports in accordance with Section XII of Attachment "A".

C. Other reports required by any condition of Attachment "B".

XV. DUTY TO PROVIDE INFORMATION [A.A.C. R18-2-304.G and -306.A.8.e]

A. The Permittee shall furnish to the Director, within a reasonable time, any information that the Director may request in writing to determine whether cause exists for revising, revoking and reissuing, or terminating the permit, or to determine compliance with the permit. Upon request, the Permittee shall also furnish to the Director copies of records required to be kept by the permit. For information claimed to be confidential, the Permittee shall furnish an additional copy of such records directly to the Administrator along with a claim of confidentiality.

B. If the Permittee has failed to submit any relevant facts or has submitted incorrect information in the permit application, the Permittee shall, upon becoming aware of such failure or incorrect submittal, promptly submit such supplementary facts or corrected information.

XVI. PERMIT AMENDMENT OR REVISION [A.A.C. R18-2-318, -319, and -320]

The Permittee shall apply for a permit amendment or revision for changes to the facility which does not qualify for a facility change without revision under Section XVII, as follows:

A. Administrative Permit Amendment (A.A.C. R18-2-318);

B. Minor Permit Revision (A.A.C. R18-2-319); and

C. Significant Permit Revision (A.A.C. R18-2-320)

The applicability and requirements for such action are defined in the above referenced regulations.

XVII. FACILITY CHANGE WITHOUT A PERMIT REVISION [A.A.C. R18-2-306.A.4 and -317]

A. The Permittee may make changes at the permitted source without a permit revision if all of the following apply:

1. The changes are not modifications under any provision of Title I of the Act or under ARS §49-401.01(19);

2. The changes do not exceed the emissions allowable under the permit whether expressed therein as a rate of emissions or in terms of total emissions;

3. The changes do not violate any applicable requirements or trigger any additional applicable

requirements;

4. The changes satisfy all requirements for a minor permit revision under A.A.C. R18-2-319.A; and

5. The changes do not contravene federally enforceable permit terms and conditions that are monitoring (including test methods), record keeping, reporting, or compliance certification requirements.

B. The substitution of an item of process or pollution control equipment for an identical or substantially similar item of process or pollution control equipment shall qualify as a change that does not require a permit revision, if it meets all of the requirements of Conditions XVII.A and XVII.C of this Attachment.

C. For each change under Conditions XVII.A and XVII.B above, a written notice by certified mail or hand delivery shall be received by the Director and the Administrator a minimum of 7 working days in advance of the change. Notifications of changes associated with emergency conditions, such as malfunctions necessitating the replacement of equipment, may be provided less than 7 working days in advance of the change, but must be provided as far in advance of the change as possible or, if advance notification is not practicable, as soon after the change as possible.

D. Each notification shall include:

1. When the proposed change will occur;

2. A description of the change;

3. Any change in emissions of regulated air pollutants; and

4. Any permit term or condition that is no longer applicable as a result of the change.

E. The permit shield described in A.A.C. R18-2-325 shall not apply to any change made under this Section, other than implementation of an alternate to Conditions XVII.A and XVII.B above.

F. Except as otherwise provided for in the permit, making a change from one alternative operating scenario to another as provided under A.A.C. R18-2-306.A.11 shall not require any prior notice under this Section.

G. Notwithstanding any other part of this Section, the Director may require a permit to be revised for any change that, when considered together with any other changes submitted by the same source under this Section over the term of the permit, do not satisfy Condition XVII.A above.

XVIII. TESTING REQUIREMENTS [A.A.C. R18-2-312]

A. The Permittee shall conduct performance tests as specified in the permit and at such other times as may be required by the Director.

B. Operational Conditions during Testing

Tests shall be conducted during operation at the maximum possible capacity of each unit under representative operational conditions unless other conditions are required by the applicable test method or in this permit. With prior written approval from the Director, testing may be performed at a lower rate. Operations during periods of start-up, shutdown, and malfunction (as defined in A.A.C. R18-2-101) shall not constitute representative operational conditions unless otherwise specified in the applicable standard.

C. Tests shall be conducted and data reduced in accordance with the test methods and procedures contained in the Arizona Testing Manual unless modified by the Director pursuant to A.A.C. R18-2-312.B.

D. Test Plan

At least 14 calendar days prior to performing a test, the Permittee shall submit a test plan to the Director in accordance with A.A.C. R18-2-312.B and the Arizona Testing Manual. This test plan must include the following:

1. Test duration;
2. Test location(s);
3. Test method(s); and
4. Source operation and other parameters that may affect test results.

E. Stack Sampling Facilities

The Permittee shall provide, or cause to be provided, performance testing facilities as follows:

1. Sampling ports adequate for test methods applicable to the facility;
2. Safe sampling platform(s);
3. Safe access to sampling platform(s); and
4. Utilities for sampling and testing equipment.

F. Interpretation of Final Results

Each performance test shall consist of three separate runs using the applicable test method. Each run shall be conducted for the time and under the conditions specified in the applicable standard. For the purpose of determining compliance with an applicable standard, the arithmetic mean of the results of the three runs shall apply. In the event that a sample is accidentally lost or conditions occur in which one of the three runs is required to be discontinued because of forced shutdown, failure of an irreplaceable portion of the sample train, extreme meteorological conditions, or other circumstances beyond the Permittee's control, compliance may, upon the Director's approval, be determined using the arithmetic mean of the results of the other two runs. If the Director or the Director's designee is present, tests may only be stopped with the Director's or such designee's approval. If the Director or the Director's designee is not present, tests may only be stopped for good cause. Good cause includes: forced shutdown, failure of an irreplaceable portion of the sample train, extreme meteorological conditions, or other circumstances beyond the Permittee's control. Termination of any test without good cause after the first run is commenced shall constitute a failure of the test. Supporting documentation, which demonstrates good cause, must be submitted.

G. Report of Final Test Results

A written report of the results of all performance tests shall be submitted to the Director within 30 days after the test is performed. The report shall be submitted in accordance with the Arizona Testing Manual and A.A.C. R18-2-312.A.

XIX. PROPERTY RIGHTS

[A.A.C. R18-2-306.A.8.d]

This permit does not convey any property rights of any sort, or any exclusive privilege.

XX. SEVERABILITY CLAUSE

[A.A.C. R18-2-306.A.7]

The provisions of this permit are severable. In the event of a challenge to any portion of this permit, or if any portion of this permit is held invalid, the remaining permit conditions remain valid and in force.

XXI. PERMIT SHIELD

[A.A.C. R18-2-325]

Compliance with the conditions of this permit shall be deemed compliance with all applicable requirements identified in the portions of this permit subtitled "Permit Shield". The permit shield shall not apply to minor revisions pursuant to Condition XVI.B of this Attachment and any facility changes without a permit revision pursuant to Section XVII of this Attachment.

XXII. PROTECTION OF STRATOSPHERIC OZONE

[40 CFR Part 82]

If this source becomes subject to the provisions of 40 CFR Part 82, then the Permittee shall comply with these provisions accordingly.

ATTACHMENT "B": SPECIFIC CONDITIONS

Air Quality Control Permit No. 35426
For
Phoenix Cement Company

I. GENERAL REQUIREMENTS

A. At the time the compliance certifications required by Section VII of Attachment "A" of this Permit are submitted, the Permittee shall submit reports of all monitoring activities required by this Attachment performed in the same six month period as applies to the compliance certification period. All instances of deviations from permit requirements shall be clearly identified in such reports. All required reports shall be certified by a responsible official consistent with Section VIII, Attachment "A" of this Permit. [A.A.C. R18-2-306.A.5.a]

B. The conditions of this Attachment shall apply to equipment identified in Attachment "C" of this Permit. In the event that after the date of permit issuance, the Permittee identifies equipment existing at the plant at the time of permit issuance, but not included in the permit application for this permit, or if the Permittee identifies errors in Attachment "C" of this Permit, the Permittee shall follow the appropriate administrative procedures as set forth in Article 3 of Title 18, Chapter 2 of the Arizona Administrative Code to include such equipment in the permit or to correct such errors. [A.A.C. R18-2-304.G]

C. The Permittee shall have on site or on call a person that is certified in EPA Reference Method 9. [A.A.C. R18-2-306.A.3.c]

D. The Permittee shall not emit gaseous or odorous materials from equipment, operations or premises under his control in such quantities or concentrations as to cause air pollution. [A.A.C. R18-2-730.D]

E. Where a stack, vent or other outlet at the Permittee's premises, which is not otherwise subject to the Existing Stationary Source Performance Standards, the New Source Performance Standards, or the National Emission Standards for Hazardous Air Pollutants of Title 18, Chapter 2 of the Arizona Administrative Code, is at such a level that fumes, gas mist, odor, smoke, vapor or any combination thereof constituting air pollution is discharged to adjoining property, the Director may require the installation of abatement equipment or the alteration of such stack, vent, or other outlet by the Permittee thereof to a degree that will adequately dilute, reduce or eliminate the discharge of air pollution to adjoining property. [A.A.C. R18-2-730.G]

F. The Permittee shall not cause, allow or permit discharge from any stationary source carbon monoxide emissions without the use of complete secondary combustion of waste gases generated by any process source. [A.A.C. R18-2-730.I]

G. Nothing in this Attachment shall be so construed as to prevent the utilization of measurements from emissions monitoring devices or techniques not designated as performance tests as evidence of compliance with applicable good maintenance and operating requirements. [A.A.C. R18-2-312.I]

H. The permit conditions or portions of the permit conditions which are material pursuant to A.A.C. R18-2-331 and A.R.S. §49-464 are indicated by *double underlined and italicized print*.

II. FACILITY-WIDE OPERATIONS GOVERNED BY VOLUNTARILY ACCEPTED PROVISIONS

[A.A.C. R18-2-306.01]

A. Applicability

The conditions of this Section apply to the pollutant-emitting activities facility wide that include Portland cement operations, quarry operations, coal preparation operations, cooling towers, and all other unclassified point sources and non-point sources that are contiguous or adjacent to the facility's main operation and under common control of the Permittee.

B. Emission Limits/Standards [A.A.C. R18-2-306.01 and -331.A.3.a]

1. Facility-Wide Emission Caps

The Permittee shall not cause to be discharged into the atmosphere from facility-wide operations, air emissions in rolling 12-month total in excess of the following:

a. *773 tons per year of particulate matter (PM);*

b. *460 tons per year of PM with an aerodynamic diameter less than 10 microns (PM_{10});*

c. *401 tons per year of sulfur dioxide (SO_2);*

d. *3,271 tons per year of nitrogen oxides (NOx);*

e. *764 tons per year of carbon monoxide (CO); and*

f. *41.5 tons per year of volatile organic compounds (VOC).*

2. Kiln 4/In-Line Raw Mill and Coal Mill Emission Limits

a. *The Permittee shall not cause to be discharged into the atmosphere from the Kiln 4/In-Line Raw Mill and Coal Mill operation, air emissions in rolling 12-month total in excess of the following:*

(1) *400 tons SO_2 per year;*

(2) *3,240 tons NOx per year; and*

(3) *698 tons CO per year.*

b. *The Permittee shall not cause to be discharged into the atmosphere from the Kiln 4/In-Line Raw Mill and Coal Mill operation, any gases which contain CO in excess of 2.0 pounds per ton of clinker in rolling 8-hour average.*

3. Operation Limitations

a. *The Permittee shall not discharge quarry explosives in excess of the following:*

(1) *913 tons per year in rolling 12-month total;*

(2) *70 tons per calendar day; and*

(3) *10 tons per hour.*

b. *The Permittee shall not cause to stack clinker in the open except when performingspecilty grinding in the warmer months of any given year, during which time, the Permittee may maintain temporary outdoor storage of no more than 2,000 tons of clinker.*

c. *The Permittee shall operate and maintain all equipment at the facility in accordance with the manufacturer's specifications.*

d. Fuel Usage

(1) *The Permittee shall only burn the following fuels at the facility:*

Fuel Type	Maximum Fuel Proportion (% Heat Input)
Coal	100
Pet-Coke	100
#2 Fuel Oil	100
Natural Gas	100

(2) Maximum fuel proportion is defined as the maximum percent of actual heat input provided by a fuel component in a fuel mixture.

C. Air Pollution Control Requirements [A.A.C. R18-2-306.01 and -331.A.3.e]

1. *Except as provided in Condition II.B.3.b above, the Permittee shall at all times, store clinker in the two clinker storage domes (DO-200 and DO-201) and the clinker bin (B-404) for minimizing particulate emissions from clinker handling and storage activity*.

2. *At all times, including periods of startup, shutdown, and malfunction, the Permittee shall operate* and maintain the production activities facility-wide, *including any associated air pollution control equipment* and monitoring equipment, *in a manner consistent with good air pollution control practices for minimizing emissions to the levels required by Conditions II.B.1 and 2 above*.

3. The good air pollution control practices include, but are not limited to, implementation of the following by the Permittee to ensure good combustion practice:

   a. Manufacturer's specified operating procedures;

   b. Startup, shutdown and malfunction plan required by Section III of this Attachment;

   c. Operation and Maintenance Plan included in Attachment "E" of this Permit.

4. Determination of whether acceptable operation and maintenance procedures are being used for minimizing emissions will be based on information available to the Director which may include, but is not limited to, monitoring results, review of operation and maintenance procedures, review of operation and maintenance records, and inspection of the source.

D. Monitoring and Performance Testing Requirements [A.A.C. R18-2-306.A.3 and 331.A.3.c]

1. *Within 180 days following issuance of the Permit, the Permittee shall install, calibrate,* maintain and operate *continuous emission monitoring systems (CEMS) at Kiln 4/In-Line Raw Mill stack (S-401) and at Coal Mill stack (S-453), for measuring CO, NOx and SO_2 concentrations of the exhaust gases passing each stack*. All continuous emissions monitoring systems shall meet the following:

   a. The Permittee shall follow the monitoring procedures and performance specifications as required by Subpart A and Appendix B of 40 CFR Part 60.

   b. The Permittee shall maintain 95 percent data recovery on all the data obtained from the CEMS. Compliance with this data recovery requirement shall be determined based on total Kiln 4 operating time during a 365 day period.

   c. The CEMS shall be designed so that one cycle of operation is complete for each successive 15-minute period.

   d. All data gaps shall be filled with the average hourly concentration recorded by the CEMS for the hour immediately before and the hour immediately after the missing data period.

   e. Instrument span shall be such that the expected output is 50 to 70 percent of span.

f. The Permittee shall develop and submit to the Director within 30 days of the issuance of the Permit, a Quality Assurance/Quality Control (QA/QC) plan. The QA/QC plan shall be at least as stringent as required by Appendix F of 40 CFR Part 60 and shall include a quarterly CEMS auditing scheme that requires a relative accuracy test audit (RATA) at least once every four calendar quarters, rotated by cylinder gas audits (CGA) or relative accuracy audits (RAA) in other three of the four calendar quarters. The CGA or RAA shall be conducted no more than three quarters in succession. The Permittee shall implement the QA/QC plan upon its approval by the Director. The Permittee shall notify the Director 14 days prior to performing RATA or CGA.

2. Within 180 days following issuance of the Permit, *the Permittee shall install, calibrate,* maintain and operate *flow monitors at K4/In-Line Raw Mill stack (S-401) and at Coal Mill stack (S-453), for measuring volumetric flow rates of the exhaust gases passing each stack*. All flow monitors shall meet the following:

   a. The Permittee shall follow the monitoring procedures and performance specifications as required by Subpart A and Appendix B of 40 CFR Part 60.

   b. The Permittee shall maintain 95 percent data recovery on all the data obtained from the flow monitors. Compliance with this data recovery requirement shall be determined based on total Kiln 4 operating time during a 365 day period.

   c. All data gaps shall be filled with the average hourly flow rate recorded by the flow monitor for the hour immediately before and the hour immediately after the missing data period.

3. Within 180 days following issuance of the Permit, *the Permittee shall install, calibrate,* maintain and operate *a permanent weigh scale system to measure and record weight rates in tons-mass per hour of the amount of clinker produced by Kiln 4*. The scale system shall be maintained within ±5% accuracy. A process weigh scale may be substituted for this purpose, provided it meets the accuracy test.

4. The Permittee shall conduct performance tests to determine PM and PM_{10} emissions as follows: [A.A.C. R18-2-306.A.3.c and 312]

   a. The performance tests shall be conducted at and samples be withdrawn from the following locations and in accordance with the following frequencies:

Test Location	Test Frequency
In-Line Raw Mill Stack S-401	Annually
Clinker Cooler Stack S-402	Annually
Coal Mill Stack S-453	Annually
OK Mill Stack S-350	Annually
DC301 Vent	Once every two years
DC302 Vent	Once every two years
DC303 Vent	Once every two years

   b. The following USEPA Reference Methods shall be used for the performance tests:

      (1) For PM, Methods 1-5 with Method 202 for back half; and

      (2) For PM_{10}, Methods 1-5 or Method 201/201A with Method 202 for back half.

   c. All performance tests shall follow the procedures of Section XVIII of Attachment "A".

E. Compliance Determination [A.A.C. R18-2-306.A.3 and 306.01.A]

1. The Permittee shall have available the following hourly average data for each stack/vent, based on measurements performed by the CEMS and flow monitors:

   a. Pounds per hour SO_2

   b. Pounds per hour NOx

   c. Pounds per hour CO

2. The Permittee shall have available the following hourly data from production activities, based on measurements performed by weigh scale system or other equivalent methods:

   a. Tons per hour of clinker produced

   b. Tons per hour of quarry explosives discharged

3. The Permittee shall calculate and record at the end of each hour, rolling 8-hour average of CO emissions total in pounds per ton of clinker (lb/ton) from In-Line Raw Mill stack S-401 and Coal Mill stack S-453, using the hourly data from Conditions II.E.1 and 2 above;

4. The Permittee shall calculate and record at the end of each calendar day, tons of quarry explosives discharged during that day.

5. The Permittee shall perform the following on the last day of each calendar month:

   a. Calculate and record for SO_2, NOx and CO separately, the monthly emissions total in tons from In-Line Raw Mill stack S-401 and Coal Mill stack S-453, using the hourly data from Condition II.E.1 above.

   b. Renew and record for SO_2, NOx and CO separately, the rolling 12-month emissions total in tons from In-Line Raw Mill stack S-401 and Coal Mill stack S-453, using the monthly emission data for the immediate past 12 consecutive months.

   c. Renew and record for PM, PM_{10}, SO_2, NOx, CO and VOC separately, the rolling 12-month emissions total in tons from facility-wide operations. The emissions evaluation shall be conducted using monthly emission data for the immediate past 12 consecutive months that may include, but is not limited to, the most recent stack testing results, rolling 12-month emission totals of individual sources, vendor provided emission data, and/or the current AP-42 factors published by USEPA. If available, the data type with the higher preference level shown as follows shall always be utilized in the evaluation:

      (1) CEMS (the highest preference);

      (2) Parametric source tests;

      (3) Single source tests;

      (4) Material balance;

      (5) Source category emissions model;

      (6) State/industry factors; and

      (7) AP-42 emission factors (the lowest preference).

   d. Calculate and record in tons, the quarry explosives usage for that month and the rolling 12-month total.

6. The Permittee shall determine compliance with the rolling 8-hour CO limit set forth in Condition II.B.2.b by comparing Condition II.E.3 CO calculation results to this limit.

7. The Permittee shall determine compliance with the rolling 12-month total emission limits set

forth for each pollutant in Conditions II.B.1 and 2 by comparing Condition II.E.5 results to the limits corresponding to that pollutant.

8. The Permittee shall determine compliance with the quarry explosives limits set forth in Condition II.B.3.a by comparing Conditions II.E.2, 4 and 5 explosives usage results to the limits.

F. Recordkeeping and Reporting Requirements [A.A.C. R18-2-306.A.4 and 305.A.5]

1. The Permittee shall report to the Director consistent with Section XII.A, Attachment "A" of the Permit, any emissions in excess of the limits established under Conditions II.B.1 and 2 of this Attachment.

2. The Permittee shall report to the Director consistent with Section XII.B, Attachment "A" of the Permit, any incidence that exhibits deviation from the operation limitations established under Condition II.B.3 of this Attachment.

3. The Permittee shall submit a semiannual report along with the compliance certification to include the following information for the past six (6) months period:

   a. Rolling 8-hour averages of CO emissions total in pounds per ton of clinker (lb/ton) from In-Line Raw Mill stack S-401 and Coal Mill stack S-453 calculated at each hour. This item may be submitted in an electronic format.

   b. For SO_2, NOx and CO separately, the monthly emissions totals from In-Line Raw Mill stack S-401 and Coal Mill stack S-453 tallied at each month.

   c. For SO_2, NOx and CO separately, the rolling 12-month emissions totals from In-Line Raw Mill stack S-401 and Coal Mill stack S-453 for each month.

   d. For PM, PM_{10}, SO_2, NOx, CO and VOC separately, the rolling 12-month emissions totals from facility-wide operations for each month.

   e. Summary of all incidences of exceedance or deviation occurred during the past six (6) months to include:

      (1) Magnitude of each exceedance or deviation recorded;

      (2) Any conversion factor(s) used in calculation;

      (3) Date and time of commencement and completion of each exceedance or deviation due to:

         (a) Startup/shutdown

         (b) Control equipment problems

         (c) Process problems

         (d) Other known causes, or

         (e) Unknown causes

      (4) Nature and cause of any malfunction, if known;

      (5) Corrective action taken or preventative measures adopted;

      (6) Total duration of exceedance or deviations during the reporting period;

      (7) Total source operating time during the reporting period; and

      (8) (Total duration of exceedance or deviations) * 100 / (Total source operating time).

   f. A monitoring systems performance report for each continuous emission monitoring system (CEMS) that includes:

(1) Each CEMS downtime in the reporting period due to:

(a) Monitor equipment malfunction

(b) Non-Monitor equipment malfunction

(c) Quality assurance calibration

(d) Other known causes, or

(e) Unknown causes

(2) Nature of the system repairs or adjustments;

(3) Total CEMS downtime; and

(4) (Total CEMS downtime) * 100 / (Total source operating time).

4. The Permittee shall maintain a file of all measurements including performance testing, continuous monitoring system performance evaluations, all continuous monitoring system or monitoring device calibration checks, and adjustments and maintenance performed on the systems or devices. This data shall be recorded in a permanent form suitable for inspection.

5. The Permittee shall maintain the following:

a. Hourly records of rolling 8-hour average of CO emissions total in pounds per ton of clinker (lb/ton) from In-Line Raw Mill stack S-401 and Coal Mill stack S-453.

b. For SO_2, NOx and CO separately, monthly records of monthly emissions total in tons from In-Line Raw Mill stack S-401 and Coal Mill stack S-453.

c. For SO_2, NOx and CO separately, monthly records of rolling 12-month emissions total in tons from In-Line Raw Mill stack S-401 and Coal Mill stack S-453.

d. For PM, PM_{10}, SO_2, NOx, CO and VOC separately, monthly records of rolling 12-month emissions total in tons from facility-wide operations.

e. Records of hourly, daily and rolling 12-month total quarry explosives usage.

f. Daily records of the type and amount of each fuel component utilized in Kiln 4.

g. Records of the manufacturer's specifications for all equipment on-site.

6. All records, analyses, and reports shall be retained for a minimum of five years from the date of generation. The most recent two years of data shall be kept on-site.

III. PORTLAND CEMENT OPERATIONS GOVERNED BY MAXIMUM AVAILABLE CONTROL TECHNOLOGY (MACT) STANDARDS

A. Applicability

The affected sources subject to this Section are:

1. The in-line kiln/raw mill system that includes Kiln 4 (K-404), Pre-heater PH-404 through 408 and CAL-404, In-Line Raw Mill RM-306, and Coal Mill RM-450;

2. Clinker Cooler CC-404;

3. Raw Mill BM-301 and Swing Mill BM-302 when used for raw feed grinding;

4. Finish Mills BM-303 and 304, OK Mill BM-305, and Swing Mill BM-302 when used for clinker grinding;

5. Raw material dryers BM-301 and BM-302 when used for raw feed grinding;

6. Each raw material, clinker, or finished product storage bin;

7. Each conveying system transfer point including those associated with coal preparation used to convey coal from the mill to the kiln; and

8. Each bagging and bulk loading and unloading system.

B. Emission Limits/Standards

1. Standards for the Kiln 4/In-Line Raw Mill and Coal Mill

a. The Permittee shall not cause to be discharged into the atmosphere from the Kiln 4/In-Line Raw Mill and Coal Mill, any gases which: [40 CFR 63.1343(b)]

(1) Contain particulate matter (PM), In-Line Raw Mill RM-306 and Coal Mill RM-450 combined, in excess of 0.15 kg per Mg (0.30 lb per ton) of feed (dry basis) to the kiln.

(2) Exhibit opacity greater than 20 percent.

(3) Contain dioxins/furans (D/F) in excess of:

(a) 0.20 ng per dscm (8.7×10^{-11} gr per dscf) (toxicity equivalents (TEQ)) corrected to seven percent oxygen; or

(b) 0.40 ng per dscm (1.7×10^{-10} gr per dscf) (TEQ) corrected to seven percent oxygen, when the average of the performance test run average temperatures at the inlet to the PM control device DC-431 is 204 °C (400 °F) or less.

b. The Permittee shall operate the Kiln 4/In-Line Raw Mill and Coal Mill system, such that: [40 CFR 63.1344(a)(1), 63.1344 (a)(2), 63.1344(b), and A.A.C. R18-2-331.A.3.b]

(1) When In-Line Raw Mill RM-306 is operating, the flue temperature at the inlet to DC-431 does not exceed the applicable exhaust temperature limit specified in Condition III.E.1.c(5) of this Attachment and established during the performance test when the raw mill was operating; and

(2) When In-Line Raw Mill RM-306 is not operating, the flue temperature at the inlet to DC-431 does not exceed the applicable exhaust temperature limit specified in Condition III.E.1.c(5) of this Attachment and established during the performance test when the raw mill was not operating.

2. Standards for Clinker Coolers [40 CFR 63.1345(a)]

The Permittee shall not cause to be discharged into the atmosphere from the clinker cooler any gases which:

a. Contain particulate matter in excess of 0.050 kg per Mg (0.10 lb per ton) of feed (dry basis) to the kiln.

b. Exhibit opacity greater than 10 percent

3. Standards for Raw Material Dryers [40 CFR 63.1346(a)]

The Permittee shall not cause to be discharged into the atmosphere from the raw material dryer any gases which exhibit opacity greater than 10 percent.

4. Standards for Raw and Finish Mills [40 CFR 63.1347]

The Permittee shall not cause to be discharged from the mill sweep or air separator air pollution control devices any gases which exhibit opacity in excess of 10 percent.

5. Standards for Material Handling Points [40 CFR 63.1348]

The Permittee shall not cause to be discharged from any raw material, clinker, or finished product storage bin, conveying system transfer point, bagging system, and bulk loading or unloading system any gases which exhibit opacity in excess of 10 percent.

C. Operation and Maintenance Requirements

1. Operation and maintenance requirements established in this subsection pursuant to Section 112 of the Act are enforceable independent of emissions limitations or other requirements in relevant standards. [40 CFR 63.6(e)(1)(iii)]

2. The Permittee shall continue to implement and comply with the Operations and Maintenance (O&M) Plan prescribed in Attachment "E" of this Permit. Failure to comply with any provision of the plan shall be a violation of this Permit. Any revisions to the plan shall be submitted to the Director for review and approval as part of the permit revision application described in Section XVI, Attachment "A" of this Permit and shall include the information required in 40 CFR 63.1350(a). [40 CFR 63.1350(a) and (b)]

3. *At all times, including periods of startup, shutdown, and malfunction, the Permittee shall operate* and maintain any affected source, including *associated air pollution control equipment* and monitoring equipment, *in a manner consistent with safety and good air pollution control practices for minimizing emissions*. During a period of startup, shutdown, or malfunction, this general duty to minimize emissions requires that the Permittee reduce emissions from the affected source to the greatest extent which is consistent with safety and good air pollution control practices. The general duty to minimize emissions during a period of startup, shutdown, or malfunction does not require the Permittee to achieve emission levels that would be required by the applicable standard at other times if this is not consistent with safety and good air pollution control practices, nor does it require the Permittee to make any further efforts to reduce emissions if levels required by the applicable standard have been achieved. Determination of whether such operation and maintenance procedures are being used will be based on information available to the Director which may include, but is not limited to, monitoring results, review of operation and maintenance procedures (including the startup, shutdown, and malfunction plan required in Condition III.C.5 below), review of operation and maintenance records, and inspection of the source.
[40 CFR 63.6(e)(1)(i) and A.A.C. R18-2-331.A.3.e]

4. The Permittee shall correct malfunctions as soon as practicable after their occurrence in accordance with the startup, shutdown, and malfunction plan required in Condition III.C.5 below. To the extent that an unexpected event arises during a startup, shutdown, or malfunction, the Permittee shall comply by minimizing emissions during such a startup, shutdown, and malfunction event consistent with safety and good air pollution control practices. [40 CFR 63.6(e)(1)(ii)]

5. Startup, Shutdown, and Malfunction Plan [40 CFR 63.6(e)(3)]

   a. The Permittee shall have developed and continue to implement a written startup, shutdown, and malfunction plan that describes, in detail, procedures for operating and maintaining the source during periods of startup, shutdown, and malfunction, and a program of corrective action for malfunctioning process and air pollution control and monitoring equipment used to comply with this Section. The purpose of the startup, shutdown, and malfunction plan is to

      (1) Ensure that, at all times, the Permittee operates and maintains each affected source, including associated air pollution control and monitoring equipment, in a manner which satisfies the general duty to minimize emissions established by Condition III.C.2 above;

      (2) Ensure that the Permittee is prepared to correct malfunctions as soon as practicable

after their occurrence in order to minimize excess emissions of hazardous air pollutants; and

(3) Reduce the reporting burden associated with periods of startup, shutdown, and malfunction (including corrective action taken to restore malfunctioning process and air pollution control equipment to its normal or usual manner of operation).

b. During periods of startup, shutdown, and malfunction, the Permittee of an affected source must operate and maintain such source (including associated air pollution control and monitoring equipment) in accordance with the procedures specified in the startup, shutdown, and malfunction plan developed under Condition III.C.5.a above.

c. The Permittee shall maintain at the affected source a current startup, shutdown, and malfunction plan and shall make the plan available upon request for inspection and copying by the Director. In addition, if the startup, shutdown, and malfunction plan is subsequently revised as provided in Condition III.C.5.d below, the Permittee shall maintain at the affected source each previous (i.e., superseded) version of the startup, shutdown, and malfunction plan, and shall make each such previous version available for inspection and copying by the Director for a period of 5 years after revision of the plan. The Director may at any time request in writing that the Permittee submit a copy of any startup, shutdown, and malfunction plan (or a portion thereof) which is maintained at the affected source or in the possession of the Permittee. Upon receipt of such a request, the Permittee must promptly submit a copy of the requested plan (or a portion thereof) to the Director. The Director shall request that the Permittee submit a particular startup, shutdown, or malfunction plan (or a portion thereof) whenever a member of the public submits a specific and reasonable request to examine or to receive a copy of that plan or portion of a plan. The Permittee may elect to submit the required copy of any startup, shutdown, and malfunction plan to the Director in an electronic format. If the Permittee claims that any portion of such a startup, shutdown, and malfunction plan is confidential business information entitled to protection from disclosure under Section 114(c) of the Act or 40 CFR 2.301, the material which is claimed as confidential shall be clearly designated in the submission.

d. Based on the results of a determination made under Condition III.C.3 above, the Director may require that the Permittee make changes to the startup, shutdown, and malfunction plan for that source. The Director shall require appropriate revisions to a startup, shutdown, and malfunction plan, if the Director finds that the plan:

(1) Does not address a startup, shutdown, or malfunction event that has occurred;

(2) Fails to provide for the operation of the source (including associated air pollution control and monitoring equipment) during a startup, shutdown, or malfunction event in a manner consistent with the general duty to minimize emissions established by Condition III.C.3 above;

(3) Does not provide adequate procedures for correcting malfunctioning process and/or air pollution control and monitoring equipment as quickly as practicable; or

(4) Includes an event that does not meet the definition of startup, shutdown, or malfunction listed in 40 CFR 63.2.

e. The Permittee may periodically revise the startup, shutdown, and malfunction plan for the affected source as necessary to satisfy the requirements of this Section or to reflect changes in equipment or procedures at the affected source. Unless the Director provides otherwise, the Permittee may make such revisions to the startup, shutdown, and malfunction plan without prior approval by the Director. However, each such revision to a startup, shutdown, and malfunction plan shall be reported in the semiannual report required by Condition III.G.2.d below. If the startup, shutdown, and malfunction plan

fails to address or inadequately addresses an event that meets the characteristics of a malfunction but was not included in the startup, shutdown, and malfunction plan at the time the Permittee developed the plan, the Permittee shall revise the startup, shutdown, and malfunction plan within 45 days after the event to include detailed procedures for operating and maintaining the source during similar malfunction events and a program of corrective action for similar malfunctions of process or air pollution control and monitoring equipment. In the event that the Permittee makes any revision to the startup, shutdown, and malfunction plan which alters the scope of the activities at the source which are deemed to be a startup, shutdown, or malfunction, or otherwise modifies the applicability of any emission limit, work practice requirement, or other requirement in a standard established under this part, the revised plan shall not take effect until after the Permittee has provided a written notice describing the revision to the permitting authority.

f. The Permittee shall operate and maintain the facility in accordance with the procedures specified in the current startup, shutdown, and malfunction plan. However, any revisions made to the startup, shutdown, and malfunction plan in accordance with the procedures established by the Section shall not be deemed to constitute permit revisions. Moreover, none of the procedures specified by the startup, shutdown, and malfunction plan for an affected source shall be deemed to fall within the permit shield provision in Section 504(f) of the Act.

D. Monitoring Requirements

1. The Permittee shall monitor the opacity at each point where emissions are vented from Kiln 4/ In-Line Raw Mill and Coal Mill in accordance with the following conditions:

a. *The Permittee shall install, calibrate, maintain and continuously operate a continuous opacity monitor (COM) located at the following to continuously monitor the opacity.*

(1) *Downstream of the In-Line Raw Mill PM control device DC-431, and*

(2) *Downstream of the Coal Mill PM control device DC-453*.

The COM shall be installed, maintained, *calibrated*, and operated *as required by Subpart A of 40 CFR Part 63 and according to PS-1 of Appendix B of 40 CFR Part 60*.

[40 CFR 63.1350(c)(1) and A.A.C. R18-2-331.A.3.c]

b. To remain in compliance, the opacity shall be maintained such that the 6-minute average opacity for any 6-minute block period does not exceed 20 percent. If the average opacity for any 6-minute block period exceeds 20 percent, this shall constitute a violation of the standard. [40 CFR 63.1350(c)(3)]

2. The Permittee shall monitor opacity from the clinker cooler at each point where emissions are vented from the clinker cooler in accordance with the following conditions:

a. *The Permittee shall install*, *calibrate*, maintain, and continuously operate *a COM located at the outlet of the clinker cooler PM control device DC-445 to continuously monitor the opacity*. *The COM shall be installed*, maintained, *calibrated*, and operated *as required by Subpart A of 40 CFR Part 63 and according to PS-1 of Appendix B to 40 CFR Part 60*.

[40 CFR 63.1350(d)(1) and A.A.C. R18-2-331.A.3.c]

b. To remain in compliance, the opacity shall be maintained such that the 6- minute average opacity for any 6-minute block period does not exceed 10 percent. If the average opacity for any 6-minute block period exceeds 10 percent, this shall constitute a violation of the standard. [40 CFR 63.1350(d)(3)]

3. The Permittee shall monitor opacity from a raw or finish mill by conducting daily visual emissions observations of the mill sweep and air separator particulate matter control devices

(PMCDs) of the affected sources, as defined in 40 CFR 63.1340(b), in accordance with the procedures of EPA Reference Method 22. The EPA Reference Method 22 test shall be conducted while the affected source is operating at the highest load or capacity level reasonably expected to occur within the day. The duration of the EPA Reference Method 22 test shall be 6 minutes. If visible emissions are observed during any EPA Reference Method 22 visible emissions test, the Permittee must: [40 CFR 63.1350(e)]

a. Initiate, within one-hour, the corrective actions specified in the site specific operating and maintenance plan prescribed in Attachment "E" of this Permit.

b. Within 24 hours of the end of the EPA Reference Method 22 test in which visible emissions were observed, conduct a visual opacity test of each stack from which visible emissions were observed in accordance with EPA Reference Method 9. The duration of the EPA Reference Method 9 test shall be 30 minutes.

c. The requirements to conduct daily Method 22 testing shall not apply to any specific raw mill or finish mill equipped with a continuous opacity monitor COM or bag leak detection system (BLDS). [40 CFR 63.1350(m) and A.A.C. R18-2-331.A.3.c]

(1) *The Permittee may choose to install a COM* in lieu of conducting the daily visual emissions testing. *The COM must be installed at the outlet of the PM control device of the raw mill or finish mill*, and *must be installed*, maintained, *calibrated*, and operated *as required by the general provisions in 40 CFR 63, Subpart A and according to PS-1 of appendix B to 40 CFR Part 60*. To remain in compliance, the opacity must be maintained such that the 6-minute average opacity for any 6-minute block period does not exceed 10 percent. If the average opacity for any 6-minute block period exceeds 10 percent, this shall constitute a violation of the standard.

(2) *The Permittee may choose to install a BLDS* in lieu of conducting the daily visual emissions testing. The following requirements shall apply to each BLDS:

(a) *The BLDS must be certified by the manufacturer to be capable of detecting PM emissions at concentrations of 10 milligrams per actual cubic meter (0.0044 grains per actual cubic foot) or less*. "Certify" shall mean that the instrument manufacturer has tested the instrument on gas streams having a range of particle size distributions and confirmed by means of valid filterable PM tests that the minimum detectable concentration limit is at or below 10 milligrams per actual cubic meter (0.0044 grains per actual cubic foot) or less;

(b) The sensor on the BLDS must provide output of relative PM emissions;

(c) The BLDS must have an alarm that will activate automatically when it detects a significant increase in relative PM emissions greater than a preset level;

(d) The presence of an alarm condition should be clearly apparent to facility operating personnel;

(e) For a positive-pressure fabric filter, each compartment or cell must have a bag leak detector. For a negative-pressure or induced-air fabric filter, the bag leak detector must be installed downstream of the fabric filter. If multiple bag leak detectors are required (for either type of fabric filter), detectors may share the system instrumentation and alarm;

(f) All BLDS must be installed, operated, adjusted, and maintained so that they are based on the manufacturer's written specifications and recommendations. The EPA recommends that where appropriate, the standard operating procedures manual for each bag leak detection system include concepts from EPA's "Fabric Filter Bag Leak Detection Guidance" (EPA-454/R-98-015, September 1997);

(g) The baseline output of the system must be established as follows:

i) Adjust the range and the averaging period of the device; and

ii) Establish the alarm set points and the alarm delay time.

(h) After initial adjustment, the range, averaging period, alarm set points, or alarm delay time may not be adjusted except as specified in the operations and maintenance plan required by Condition III.C.2 above. In no event may the range be increased by more than 100 percent or decreased by more than 50 percent over a 1 calendar year period unless a responsible official as defined in 40 CFR 63.2 certifies in writing to the Director that the fabric filter has been inspected and found to be in good operating condition; and

(i) The Permittee must maintain and operate the fabric filter such that the bag leak detector alarm is not activated and alarm condition does not exist for more than 5 percent of the total operating time in a 6-month block period. Each time the alarm activates, alarm time will be counted as the actual amount of time taken by the Permittee to initiate corrective actions. If inspection of the fabric filter demonstrates that no corrective actions are necessary, no alarm time will be counted. The Permittee must continuously record the output from the BLDS during periods of normal operation. Normal operation does not include periods when the BLDS is being maintained or during startup, shutdown or malfunction.

(3) If a COM or BLDS is to be installed and operated in lieu of conducting the daily visual emissions testing, the Permittee shall furnish the Director and the Administrator written notification 30 days prior to such installation in addition to other notification requirements set forth in Condition III.H of this section.

4. The Permittee shall monitor D/F emissions in accordance with the following conditions: [40 CFR 63.1350(f)]

a. *The Permittee shall install*, *calibrate*, maintain, and continuously operate *a continuous monitor to record the temperature of the exhaust gases from the Kiln 4/In-Line Raw Mill and Coal Mill system at the inlet to, or upstream of, the in-line raw mill PM control device DC-431*. [A.A.C. R18-2-331.A.3.c]

(1) The recorder response range must include zero and 1.5 times of the average temperatures established for each of the four different operating scenarios according to the requirements in Condition III.E.1.c(5) below.

(2) The reference method must be a National Institute of Standards and Technology calibrated reference thermocouple-potentiometer system or alternate reference, subject to approval by the Director.

b. The Permittee shall monitor and continuously record the temperature of the exhaust gases from the Kiln 4/In-Line Raw Mill and Coal Mill at the inlet to the In-Line Raw Mill PM control device DC-431.

c. The three-hour rolling average temperature shall be calculated as the average of 180 successive one-minute average temperatures.

d. Periods of time when one-minute averages are not available shall be ignored when calculating three-hour rolling averages. When one-minute averages become available, the first one-minute average is added to the previous 179 values to calculate the three-hour rolling average.

e. When the operating status of the In-Line Raw Mill is changed from off to on, or from on to off, the calculation of the three-hour rolling average temperature for the corresponding equipment must begin anew, without considering previous recordings.

f. The calibration of all thermocouples and other temperature sensors shall be verified at least once every three months.

5. The Permittee shall conduct an inspection of the components of the combustion system of the Kiln 4/In-Line Raw Mill and Coal Mill at least once per year. [40 CFR 63.1350(i)]

6. The Permittee shall monitor opacity in accordance with the Operation and Maintenance Plan enclosed in Attachment "E" of this Permit. [40 CFR 63.1350(j)]

7. *The Permittee shall install*, *calibrate*, maintain, and operate *a particulate matter continuous emission monitoring system (PM CEMS) to measure the particulate matter discharged to the atmosphere*. All requirements relating to installation, calibration, maintenance, operation or performance of the PM CEMS and implementation of the PM CEMS requirement are deferred pending further rulemaking. [40 CFR 63.1350(k) and A.A.C. R18-2-331.A.3.c]

8. All continuous emissions monitoring systems shall meet the following requirements: [A.A.C. R18-2-306.A.3.c]

   a. Monitoring performance specifications required by Conditions III.D above, 40 CFR 63.8(a)(1), and/or 40 CFR 63.8(b) through 40 CFR 63.8(g).

   b. The Permittee shall maintain 90 percent data recovery on all the data obtained from the CEMS. Compliance with this data recovery requirement shall be determined based on total Kiln 4 operating time during a 365 day period.

   c. All data gaps shall be filled with the average hourly concentration recorded by the CEMS for the hour immediately before and the hour immediately after the missing data period.

   d. Instrument span shall be such that the expected output is 50 to 70 percent (1.5 times the average temperature established according to Condition III.E.1.c(5) below for temperature monitors) of span.

E. Testing Requirements

1. The Permittee shall demonstrate compliance with the emission limits of Conditions III.B.1.a and III.B.2 through III.B.5 of this Attachment by conducting the following test methods and procedures in accordance with the frequency requirements set forth in Conditions III.E.2 and 3 of this Attachment and consistent with the requirements set forth in 40 CFR 63.7 and in Section XVIII, Attachment "A" of this Permit: [40 CFR 63.1349(a) and A.A.C. R18-2-306.A.3.c]

   a. PM and Visual Emissions Testing Required for Kiln 4/In-Line Raw Mill and Coal Mill and Clinker Cooler

      (1) For Kiln 4/In-Line Raw Mill and Coal Mill, the Permittee shall demonstrate compliance by conducting separate performance tests as specified in Conditions III.E.1.a.(3) through III.E.1.a.(5) below while both In-Line Raw Mill RM-306 and Coal Mill RM-450 are under normal operating conditions and while In-Line Raw Mill RM-306 is not operating and Coal Mill RM-450 is under normal operating conditions. The performance tests shall be conducted such that the flue samples are to be withdrawn from In-Line Raw Mill stack S-401 and Coal Mill stack S-453 simultaneously. All performance tests shall be conducted and operating parameters set in accordance with a site-specific test plan required to be submitted by the Permittee and approved by the Director prior to the tests. [40 CFR 63.7(c) and 1349(b)(1)]

      (2) For Clinker Cooler CC-404, the Permittee shall demonstrate compliance by conducting a performance test as specified in Conditions III.E.1.a(3) through III.E.1.a(5) below. The performance test shall be conducted and operating parameters set in accordance with a site-specific test plan required to be submitted by the Permittee and approved by the Director prior to the test.

[40 CFR 63.7(c) and 1349(b)(1)]

(3) EPA Reference Method 5 shall be used to determine PM emissions. Each performance test shall consist of three separate runs under the conditions that exist when the affected source, as defined in 40 CFR 63.1340(b), is operating at the highest load or capacity level reasonably expected to occur. Each run shall be conducted for at least one hour, and the minimum sample volume shall be 0.85 dscm (30 dscf). The average of the three runs shall be used to determine compliance. A determination of the PM collected in the impingers ("back half") of the EPA Reference Method 5 particulate sampling train is not required to demonstrate initial compliance with the PM standards specified in Conditions III.B.1.a(1) and III.B.2.a of this Attachment. However this shall not preclude the permitting authority from requiring a determination of the "back half" for other purposes. [40 CFR 63.1349(b)(1)(i)]

(4) Suitable methods shall be used to determine the Kiln 4/In-Line Raw Mill and Coal Mill feed rate, except for fuels, for each run. [40 CFR 63.1349(b)(1)(ii)]

(5) The emission rate, E, of PM shall be computed for each run using the following equations: [40 CFR 63.1349(b)(1)(iii)]

(a) For Kiln 4/In-Line Raw Mill and Coal Mill

$$E_k = \frac{C_{s\text{-}401}Q_{sd\text{-}401} + C_{s\text{-}453}Q_{sd\text{-}453}}{P}$$

where:
E_k = Kiln 4/in-line raw mill and coal mill PM emission rate, kg/Mg of kiln feed
$C_{s\text{-}401}$ = In-line raw mill stack PM concentration, kg/dscm
$Q_{sd\text{-}401}$ = Volumetric flow rate of effluent gas at in-line raw mill stack, dscm/hr
$C_{s\text{-}453}$ = Coal mill stack PM concentration, kg/dscm
$Q_{sd\text{-}453}$ = Volumetric flow rate of effluent gas at coal mill stack, dscm/hr
P = Total kiln feed (dry basis), Mg/hr

(b) For Clinker Cooler CC-404

$$E_c = \frac{C_{s\text{-}402}Q_{sd\text{-}402}}{P}$$

where:
E_c = Clinker cooler stack PM emission rate, kg/Mg of kiln feed
$C_{s\text{-}402}$ = Clinker cooler stack PM concentration, kg/dscm
$Q_{sd\text{-}402}$ = Volumetric flow rate of effluent gas at clinker cooler stack, dscm/hr
P = Total kiln feed (dry basis), Mg/hr

(6) The Permittee shall determine the opacity exhibited at each stack during the period of the EPA Reference Method 5 performance tests required by Condition III.E.1.a.(3) above through the use of a continuous opacity monitor (COM) for that stack. The maximum six-minute average opacity during the three EPA Reference Method 5 test runs shall be determined during each EPA Reference Method 5 test run, and used to demonstrate compliance with the applicable opacity limits of Condition III.B.1.a(2) or III.B.2.b above. [40 CFR 63.1349(b)(1)(v)]

b. Opacity Testing for Other Affected Sources [40 CFR 63.1349(b)(2)]

(1) The Permittee shall demonstrate compliance of the following affected sources with the corresponding opacity limits by conducting a test in accordance with Method 9 of Appendix A to 40 CFR Part 60:

(a) Raw Mill BM-301 and Swing Mill BM-302 when used for raw feed grinding;

(b) Finish Mills BM-303 and 304, OK Mill BM-305, and Swing Mill BM-302

when used for clinker grinding;

(c) Raw material dryers BM-301 and BM-302 when used for raw feed grinding;

(d) Each raw material, clinker, or finished product storage bin;

(e) Each conveying system transfer point including those associated with coal preparation used to convey coal from the mill to the kiln; and

(f) Each bagging and bulk loading and unloading system.

(2) The opacity testing shall be conducted under the conditions that exist when the affected source is operating at the representative performance conditions in accordance with 40 CFR 63.7(e). The maximum 6-minute average opacity exhibited during the test period shall be used to determine whether the affected source is in compliance with the standard. The duration of the Method 9 performance test shall be 3 hours (30 6-minute averages), except that the duration of the Method 9 performance test may be reduced to 1 hour if the following conditions apply:

(a) There are no individual readings greater than 10 percent opacity;

(b) There are no more than three readings of 10 percent for the first 1-hour period.

c. D/F Emissions Testing Required for Kiln 4/In-Line Raw Mill and Coal Mill

(1) The Permittee shall demonstrate compliance with the D/F emission limit by conducting separate performance tests as specified in Conditions III.E.1.c(2) through III.E.1.c(5) below while In-Line Raw Mill RM-306 is under normal operating conditions and while In-Line Raw Mill RM-306 is not operating. Flue samples shall be withdrawn from In-Line Raw Mill stack S-401 and from Coal Mill stack S-453. All performance tests shall be conducted and operating parameters set in accordance with a site-specific test plan required to be submitted by the Permittee and approved by the Director prior to the tests. [40 CFR 63.7(c) and 63.1349(b)(3)]

(2) EPA Reference Method 23 shall be used to determine D/F emissions. Each performance test shall consist of three separate runs; each run shall be conducted under the conditions that exist when the affected source is operating at the representative performance conditions in accordance with 40 CFR 63.7(e). The duration of each run shall be at least three hours and the sample volume for each run shall be at least 2.5 dscm (90 dscf). The concentration shall be determined for each run and the arithmetic average of the concentration measured for the three runs shall be calculated and used to determine compliance. [40 CFR 63.1349(b)(3)(i)]

(3) The temperature at the inlet to the In-Line Raw Mill PM control device DC-431 shall be continuously recorded during the period of the EPA Reference Method 23 test, and the continuous temperature record(s) shall be included in the performance test report. [40 CFR 63.1349(b)(3)(ii)]

(4) One-minute average temperatures shall be calculated for each minute of each run of the test. [40 CFR 63.1349(b)(3)(iii)]

(5) The run average temperature shall be calculated for each run, and the average of the run average temperatures shall be determined and included in the performance test report and will determine as referenced in Condition III.B.1.b of this Attachment, the applicable exhaust temperature limit while In-Line Raw Mill RM-306 is under normal operating conditions and while In-Line Raw Mill RM-306 is not operating. [40 CFR 63.1349(b)(3)(iv)]

d. The Permittee shall document the performance test results in and submit to the Director, complete test reports that contain the following as well as all other relevant information: [40 CFR 63.1349(a) and A.A.C. R18-2-306.A.3.c]

(1) A brief description of the process and the air pollution control system;

(2) Sampling location description(s);

(3) A description of sampling and analytical procedures and any modifications to standard procedures;

(4) Test results;

(5) Quality assurance procedures and results;

(6) Records of operating conditions during the test, preparation of standards, and calibration procedures;

(7) Raw data sheets for field sampling and field and laboratory analyses;

(8) Documentation of calculations;

(9) All data recorded and used to establish parameters for compliance monitoring; and

(10) Any other information required by the test method.

2. Except as provided in Condition III.E.5 below and at such other times as may be required by the Director, performance tests required under Condition III.E.1.a above shall be repeated every five years for the purpose of 40 CFR 63, Subpart LLL, and every year for the purpose of A.A.C. R18-2-312, except that the Permittee is not required to repeat the performance test of opacity for the Kiln 4/In-Line Raw Mill and Coal Mill or clinker cooler after the initial performance test completed within 180 days of issuance of this Permit. [40 CFR 63.1349(c) and A.A.C. R18-2-312]

3. Performance tests required under Condition III.E.1.b above shall be repeated every five years and at such other times as may be required by the Director. [40 CFR 63.1349(c) and A.A.C. R18-2-312]

4. Except as provided in Condition III.E.5 below and at such other times as may be required by the Director, performance tests required under Condition III.E.1.c above shall be repeated every 30 months. [40 CFR 63.1349(d)]

5. The Permittee is required to repeat the performance tests for the Kiln 4/In-Line Raw Mill and Coal Mill system as specified in Conditions III.E.1.a and c above within 90 days of initiating any significant change in the feed or fuel from that used in the previous performance test. [40 CFR 63.1349(e)]

F. Recordkeeping Requirements

1. The Permittee shall maintain files of all information (including all reports and notifications) required by this condition in a form suitable and readily available for inspection and review as required by 40 CFR 63.10(b)(1). The files shall be retained for at least five years following the date of each occurrence, measurement, maintenance, corrective action, report, or record. At a minimum, the most recent two years of data shall be retained on site. The remaining three years of data may be retained off site. The files may be maintained on microfilm, on a computer, on floppy disks, on magnetic tape, or on microfiche. [40 CFR 63.1355(a)]

2. The Permittee shall maintain records for each affected source as required by 40 CFR 63.10(b)(2) and (b)(3) and the following: [40 CFR 63.1355(b)]

   a. All documentation supporting initial notifications and notifications of compliance status under 40 CFR 63.9;

   b. All records of applicability determination, including supporting analyses; and

   c. If the Permittee has been granted a waiver under 40 CFR 63.8(f)(6), any information demonstrating whether the source is meeting the requirements for a waiver of record

keeping or reporting requirements.

3. For all continuous monitoring systems, the Permittee shall maintain all records required by 40 CFR 63.10(c) in addition to the recordkeeping requirements in Condition III.F.2 above. [40 CFR 63.1355(c)]

4. The Permittee shall maintain all records with regard to the startup, shutdown and malfunction events, as required under 40 CFR 63.6(e)(3). [40 CFR 63.6(e)(3)(iii), (iv) and (v)]

5. The Permittee shall maintain a file of all of the measurements including performance testing, continuous monitoring system performance evaluations, all continuous monitoring system or monitoring device calibration checks, and adjustments and maintenance performed on these systems or devices. This data shall be recorded in a permanent form suitable for inspection. [A.A.C. R18-2-306.A.4]

G. Reporting Requirements

1. The reporting provisions of 40 CFR Part 63, Subpart A that apply to the Permittee are listed in Table 1 to Subpart LLL in 40 CFR Part 63. [40 CFR 63.1354(a)]

2. The Permittee shall comply with the reporting requirements specified in 40 CFR 63.10 as follows: [40 CFR 63.1354(b) and A.A.C. R18-2-306.A.5]

   a. As required by 40 CFR 63.10(d)(2), the Permittee shall report the results of performance tests as part of the notification of compliance status.

   b. As required by 40 CFR 63.10(d)(3), the Permittee shall report the opacity results from tests required by Condition III.E above.

   c. As required by 40 CFR 63.10(d)(5), if actions taken by a Permittee during a startup, shutdown, or malfunction (including actions taken to correct a malfunction) are consistent with the procedures specified in the Permittee's startup, shutdown, and malfunction plan specified in 40 CFR 63.6(e)(3), the Permittee shall state such information in a semi-annual report. Reports shall only be required if a startup, shutdown, or malfunction occurred during the reporting period. The startup, shutdown, and malfunction report may be submitted simultaneously with the excess emissions and continuous monitoring system performance reports.

   d. Any time an action taken by the Permittee during a startup, shutdown, or malfunction (including actions taken to correct a malfunction) is not consistent with the procedures in the startup, shutdown, and malfunction plan, the Permittee shall make an immediate report of the actions taken for that event within 2 working days, by telephone call or facsimile (fax) transmission. The immediate report shall be followed by a letter, certified by the Permittee, explaining the circumstances of the event, the reasons for not following the startup, shutdown, and malfunction plan, and whether any excess emissions and/or parameter monitoring exceedances are believed to have occurred.

   e. As required by 40 CFR 63.10(e)(2), the Permittee shall submit a written report of the results of the performance evaluation for the continuous monitoring system required by 40 CFR 63.8(e). The Permittee shall submit the report simultaneously with the results of the performance test.

   f. As required by 40 CFR 63.10(e)(2), the Permittee, when using a continuous opacity monitoring system to determine opacity compliance during any performance test required under 40 CFR 63.7 and described in 40 CFR 63.6(d)(6), shall report the results of the continuous opacity monitoring system performance evaluation conducted under 40 CFR 63.8(e).

   g. As required by 40 CFR 63.10(e)(3), for any affected source equipped with a continuous

emission monitor, the Permittee shall submit an excess emissions and continuous monitoring system performance report for any event when the continuous monitoring system data indicate the source is not in compliance with the applicable emission limitation or operating parameter limit.

h. The Permittee shall submit a summary report semiannually along with the compliance certification, which contains the information specified in 40 CFR 63.10(e)(3)(vi). In addition, the summary report shall include:

(1) All exceedances of maximum control device inlet gas temperature limits specified in Condition III.B.1.b of this Attachment;

(2) All failures to calibrate thermocouples and other temperature sensors as required under Condition III.D.4 of this Attachment;

(3) The results of any combustion system component inspections conducted within the reporting period as required under Condition III.D.5 of this Attachment; and

(4) All failures to comply with any provision of the Operation and Maintenance Plan prescribed in Attachment "E" of this Permit.

(5) All startup, shutdown and malfunction events required to be reported under 40 CFR 63.6(e).

i. If the total continuous monitoring system downtime for any CEM or any continuous monitoring system (CMS) for the reporting period is 10 percent or greater of the total operating time for the reporting period, the Permittee shall submit an excess emissions and continuous monitoring system performance report along with the summary report.

H. Notification Requirements

1. The notification provisions of 40 CFR Part 63, Subpart A that apply to the Permittee are listed in Table 1 to Subpart LLL in 40 CFR Part 63. [40 CFR 63.1353(a)]

2. The Permittee shall comply with the notification requirements in 40 CFR 63.9 as follows: [40 CFR 63.1353(b)]

a. Initial notifications as required by 40 CFR 63.9(b) through (d). A Title V permit may be used in lieu of the initial notification requirement under 40 CFR 63.9(b), provided the same information is contained in the permit application as required by 40 CFR 63.9(b). Permit applications shall be submitted by the same due dates as those specified for the final notification;

b. Notification of performance tests, as required by 40 CFR 63.7 and 63.9(e);

c. Notification of opacity and visible emission observations required by Condition III.E above in accordance with 40 CFR 63.6(h)(5) and Part 63.9(f);

d. Notification, as required by 40 CFR 63.9(g), of the date that the continuous emission monitor performance evaluation required by 40 CFR 63.8(e) is scheduled to begin;

e. Notification of compliance status, as required by 40 CFR 63.9(h).

I. Permit Shield [A.A.C. R18-2-325]

Compliance with the terms of this Section shall be deemed compliance with the following applicable requirement(s) in effect on the date of permit issuance: 40 CFR 63.1343(b), 40 CFR 63.1344(a)(1), 40 CFR 63.1344(a)(2), 40 CFR 63.1344(b), 40 CFR 63.1345(a), 40 CFR 63.1346(a), 40 CFR 63.1347, 40 CFR 63.1348, 40 CFR 63.1349 (a), 40 CFR 63.1349(b)(1), 40 CFR 63.1349(b)(1)(i) through 40 CFR 63.1349(b)(1)(iii), 40 CFR 63.1349(b)(1)(v), 40 CFR 63.1349(b)(3), 40 CFR 63.1349(b)(3)(i) through 40 CFR 63.1349(b)(3)(iv), 40 CFR 63.1349(c), 40

CFR 63.1349(d), 40 CFR 63.1349(e), 40 CFR 63.1350(a), 40 CFR 63.1350(b), 40 CFR 63.1350(c), 40 CFR 63.1350(c)(1), 40 CFR 63.1350(c)(3), 40 CFR 63.1350(d), 40 CFR 63.1350(d)(1), 40 CFR 63.1350(d)(3), 40 CFR 63.1350(e), 40 CFR 63.1350(f), 40 CFR 63.1350(i), 40 CFR 63.1350(j), 40 CFR 63.1353(a), 40 CFR 63.1353(b), 40 CFR 63.1354(a), 40 CFR 63.1354(b), 40 CFR 63.1355(a) through 40 CFR 63.1355(c).

IV. QUARRY AND RAW MATERIAL CRUSHING

A. Non-New Source Performance Standards (non-NSPS) Requirements

1. Applicability [A.A.C. R18-2-702.A]

The conditions of this subsection apply to each crusher, grinding mill, screening operation, bucket elevator, belt conveyor, bagging operation, storage bin, enclosed truck or railcar loading station which was constructed before August 31, 1983, or which was constructed after August 31, 1983 but with a primary crusher capacity less than 150 tons per hour.

2. Particulate Matter Emission Limitations/Standards

a. The Permittee shall not cause, allow, or permit the discharge of particulate matter into the atmosphere, except as fugitive emissions, in any one hour from any gravel or crushed stone processing plant, in excess of the amounts calculated by one of the following equations: [A.A.C. R18-2-722.B]

(1) For sources having a process weight rate of 60,000 pounds per hour (30 tons per hour) or less, the maximum allowable emissions shall be determined by the following equation:

$E = 4.10P^{0.67}$

where:

E = the maximum allowable particulate emissions rate in pounds-mass per hour

P = the process weight rate in tons-mass per hour

(2) For sources having a process weight rate greater than 60,000 pounds per hour (30 tons per hour), the maximum allowable emissions shall be determined by the following equation:

$E = 55.0P^{0.11} - 40$

where:

E = the maximum allowable particulate emissions rate in pounds-mass per hour

P = the process weight rate in tons-mass per hour

b. The Permittee shall not cause or allow to be discharged into the atmosphere from the affected quarry operation, any plume or effluent which exhibits an opacity greater than 20%, as determined by Reference Method 9 in 40 CFR Part 60. [A.A.C. R18-2-702.B.2 and 3]

3. Air Pollution Control Requirements [A.A.C. R18-2-306.A.2, -331.A.3.d, -331.A.3.e, and -722.D]

a. The Permittee shall install, maintain, and operate spray bars, including periods of startup, shutdown, and malfunction, to control visible emissions from crushing, screening, handling, transporting or conveying of materials, or other operations likely to result in significant amounts of airborne dust, or the material shall be adequately wet to minimize visible emissions to the extent practicable.

b. Spray bar pollution controls shall be utilized in accordance with "EPA Control of Air Emissions from Process Operations in the Rock Crushing Industry" (EPA 340/1-79-002), "Wet Suppression System" (pages 15-34, amended as of January 1979 (and no future amendments or editions)), as incorporated herein by reference and on file with the Office

of the Secretary of State, with placement of spray bars and nozzles as required by the Director to minimize air pollution.

4. Monitoring, Record Keeping, and Reporting Requirements

a. Bi-weekly Monitoring for Stack Sources [A.A.C. R18-2-306.A.3.c and -306.A.5]

(1) Within 180 days of issuance of the Permit, the Permittee shall conduct certified EPA Reference Method 9 performance tests in accordance with Section XVIII of Attachment "A" for the stacks associated with the quarry, while operating at normal representative working conditions, to establish a baseline opacity level for each of the stacks. Within 30 days of establishing the baseline opacity, the Permittee shall report the results to the Director.

(2) A certified Method 9 observer shall conduct a bi-weekly visual survey of visible emissions from the stacks associated with the quarry when they are in operation. The Permittee shall keep a record of the name of the observer, the date on which the observation was made, and the results of the observation.

(3) If the observer sees a plume that on an instantaneous basis appears to exceed the baseline opacity level, then the observer shall, if practicable, take a six-minute Method 9 observation of the plume.

(4) If the six-minute opacity of the plume is less than the baseline opacity level, the observer shall make a record of the following:

(a) Name of the observer, location, date, and time of the observation; and

(b) The results of the Method 9 observation.

(5) If the six-minute opacity of the plume exceeds the baseline opacity level, but is less than the applicable opacity standard, the Permittee shall adjust or repair the controls or equipment to reduce opacity to or below the baseline opacity level. The observer shall make a record of the following:

(a) Name of the observer, location, date, and time of the observation;

(b) The results of the Method 9 observation;

(c) Date and time when corrective action was taken; and

(d) Type of corrective action taken.

(6) If the six-minute opacity of the plume exceeds the applicable opacity standard, then the Permittee shall do the following:

(a) Adjust or repair the controls or equipment to reduce opacity to or below the baseline level; and

(b) Report it as an excess emission for opacity.

(7) If corrective actions fail to reduce opacity to or below the baseline level, the Permittee shall adopt the following course of action:

(a) Document all corrective actions; and

(b) Initiate procedures to re-establish the baseline within forty eight hours in accordance with Condition IV.A.4.a(8) below.

(8) If necessitated by the results of the bi-weekly monitoring, the Permittee may re-establish the baseline opacity level(s). Re-establishment of the baseline(s) shall be performed utilizing the same procedures used in setting up the initial baseline level(s). Within 30 days of re-establishing the baseline opacity, the Permittee shall report the results to the Director. The report shall also contain a description of the need for re-establishing the baseline(s).

b. Bi-weekly Monitoring for Fugitive Emissions [A.A.C. R18-2-306.A.3.c and -306.A.5]

(1) A certified Method 9 observer shall conduct a bi-weekly visual survey of fugitive emissions from the quarry when it is in operation.

(2) If the observer, during the visual survey, does not see any plume from any fugitive source that on an instantaneous basis appears to exceed the applicable opacity standard, then the observer shall keep a record of the name of the observer, the date on which the observation was made, and the results of the observation.

(3) If the observer sees a plume from a fugitive source that on an instantaneous basis appears to exceed the applicable opacity standard, then the observer shall, if practicable, take a six-minute Method 9 observation of the plume.

(4) If the six-minute opacity of the plume exceeds the applicable opacity standard, the Permittee shall do the following:

(a) Adjust or repair the controls or equipment to reduce opacity to below the opacity standard;

(b) Report it as excess emissions.

(5) If the six-minute opacity of the plume is less than the applicable opacity standard, the observer shall make a record of the following:

(a) Name of the observer, location, date, and time of the observation; and

(b) The results of the Method 9 observation.

c. The Permittee shall install, calibrate, maintain, and operate monitoring devices which can be used to determine daily the process weight of gravel or crushed stone produced. The weighing devices shall have an accuracy of ±5% over their operating range.
[A.A.C. R18-2-722.F and -331.A.3.c]

d. The Permittee shall maintain daily records of the crushed material produced in tons.
[A.A.C. R18-2-722.G]

B. New Source performance Standards (NSPS) Requirements

1. Applicability [40 CFR 60.670(c)(2) and 60.670(e)]

The conditions of this subsection apply to each crusher, grinding mill, screening operation, bucket elevator, belt conveyor, bagging operation, storage bin, enclosed truck or railcar loading station which was constructed after August 31, 1983, and which has a primary crusher capacity of more than 150 tons per hour.

2. Standards for Particulate Matter [40 CFR 60.672 and R18-2-331.A.3.f]

a. *The Permittee shall not cause to be discharged into the atmosphere from any transfer point on belt conveyors or from any other equipment any stack emissions which*:

(1) Contain particulate matter in excess of 0.05 g/dscm (0.022 gr/dscf); and

(2) *Exhibit greater than 7 percent opacity*.

b. *The Permittee shall not cause to be discharged into the atmosphere from any transfer point on belt conveyors or from any other affected facility any fugitive emissions which exhibit greater than 10 percent opacity*, except as provided in Conditions IV.B.2.c, d and e below.

c. *The Permittee shall not cause to be discharged into the atmosphere from any crusher, at which a capture system is not used, fugitive emissions which exhibit greater than 15 percent opacity*.

d. Truck dumping of nonmetallic minerals into any screening operation, feed hopper, or crusher is exempt from the requirements of Condition IV.B.2.

e. If any transfer point on a conveyor belt or any other affected facility is enclosed in a building, then each enclosed affected facility must comply with the emission limits in Conditions IV.B.2.a, b and c above, or the building enclosing the affected facility or facilities must comply with the following emission limits:

(1) The Permittee shall not cause to be discharged into the atmosphere from any building enclosing any transfer point on a conveyor belt or any other affected facility any visible fugitive emissions except emissions from a vent as defined in 40 CFR 60.671.

(2) The Permittee shall not cause to be discharged into the atmosphere from any vent of any building enclosing any transfer point on a conveyor belt or any other affected facility emissions which exceed the stack emission limits in Condition IV.B.2.a above.

f. *The Permittee shall not cause to be discharged into the atmosphere from any baghouse that controls emissions from only an individual, enclosed storage bin, stack emissions which exhibit greater than 7 percent opacity*.

g. The Permittee shall comply with the emission limits in Condition IV.B.2.a above for any multiple storage bins with combined stack emissions.

h. The Permittee shall not cause to be discharged into the atmosphere any visible emissions from:

(1) Wet screening operations and subsequent screening operations, bucket elevators, and belt conveyors that process saturated material in the production line up to the next crusher, grinding mill or storage bin.

(2) Screening operations, bucket elevators, and belt conveyors in the production line downstream of wet mining operations, where such screening operations, bucket elevators, and belt conveyors process saturated materials up to the first crusher, grinding mill, or storage bin in the production line.

3. Air Pollution Control Requirement [A.A.C. R18-2-306.A.2, -331.A.3.d, and -331.A.3.e]

The Permittee shall install, maintain, and *operate spray bars*, *including periods of startup, shutdown, and malfunction, to control visible emissions from crushing, screening, handling, transporting or conveying of materials, or other operations likely to result in significant amounts of airborne dust, or the material shall be adequately wet to minimize visible emissions to the extent practicable*.

4. Monitoring, Record Keeping, and Reporting Requirements A.A.C. R18-2-306.A.3.c and -306.A.5]

a. Bi-Weekly Monitoring for Stack Sources

(1) Within 180 days of issuance of this permit, the Permittee shall conduct certified Method 9 performance tests in accordance with Section XVIII of Attachment A for the stacks associated with the quarry, while operating at normal representative working conditions, to establish a baseline opacity level for each of the stacks. Within 30 days of establishing the baseline opacity, the Permittee shall report the results to the Director.

(2) A certified Method 9 observer shall conduct a bi-weekly (once in two weeks) visual survey of visible emissions from the stacks associated with the quarry when they are in operation. The Permittee shall keep a record of the name of the observer, the date on which the observation was made, and the results of the observation.

(3) If the observer sees a plume that on an instantaneous basis appears to exceed the baseline opacity level, then the observer shall, if practicable, take a six-minute Method 9 observation of the plume.

(4) If the six-minute opacity of the plume is less than the baseline opacity level, the observer shall make a record of the following:

(a) Name of the observer, location, date, and time of the observation; and

(b) The results of the Method 9 observation.

(5) If the six-minute opacity of the plume exceeds the baseline opacity level, but is less than the applicable opacity standard, the Permittee shall adjust or repair the controls or equipment to reduce opacity to or below the baseline opacity level. The observer shall make a record of the following:

(a) Name of the observer, location, date, and time of the observation;

(b) The results of the Method 9 observation;

(c) Date and time when corrective action was taken; and

(d) Type of corrective action taken.

(6) If the six-minute opacity of the plume exceeds the applicable opacity standard, then the Permittee shall do the following:

(a) Adjust or repair the controls or equipment to reduce opacity to or below the baseline level; and

(b) Report it as an excess emission for opacity.

(7) If corrective actions fail to reduce opacity to or below the baseline level, the Permittee shall adopt the following course of action:

(a) Document all corrective actions; and

(b) Initiate procedures to re-establish the baseline within forty eight hours in accordance with Condition IV.B.4.a(8) below.

(8) If necessitated by the results of the bi-weekly monitoring, the Permittee may re-establish the baseline opacity level(s). Re-establishment of the baseline(s) shall be performed utilizing the same procedures used in setting up the initial baseline level(s). Within 30 days of re-establishing the baseline opacity, the Permittee shall report the results to the Director. The report shall also contain a description of the need for re-establishing the baseline(s).

b. Bi-Weekly Monitoring for Fugitive Emissions

(1) A certified Method 9 observer shall conduct a bi-weekly (once in two weeks) visual survey of fugitive emissions from the quarry when it is in operation.

(2) If the observer, during the visual survey, does not see any plume from any fugitive source that on an instantaneous basis appears to exceed the applicable opacity standard, then the observer shall keep a record of the name of the observer, the date on which the observation was made, and the results of the observation.

(3) If the observer sees a plume from a fugitive source that on an instantaneous basis appears to exceed the applicable opacity standard, then the observer shall, if practicable, take a six-minute Method 9 observation of the plume.

(4) If the six-minute opacity of the plume exceeds the applicable opacity standard, Permittee shall do the following:

(a) Adjust or repair the controls or equipment to reduce opacity to below the opacity standard;

(b) Report it as excess emissions.

(5) If the six-minute opacity of the plume is less than the applicable opacity standard, the observer shall make a record of the following:

(a) Name of the observer, location, date, and time of the observation; and

(b) The results of the Method 9 observation.

5. Testing Requirements

a. In conducting the performance tests required in 40 CFR 60.8, the Permittee shall use as reference methods and procedures the test methods in Appendix A of 40 CFR Part 60 or other methods and procedures as specified in Condition IV.B.5, except as provided in 40 CFR 60.8(b). Acceptable alternative methods and procedures are given in Condition IV.B.5.h below. [40 CFR 60.675(a)]

b. The Permittee shall determine compliance with the particulate matter standards in Condition IV.B.2.a above as follows: [40 CFR 60.675(b)(2)]

(1) Method 5 or Method 17 shall be used to determine the particulate matter concentration. The sample volume shall be at least 1.70 dscm (60 dscf). For Method 5, if the gas stream being sampled is at ambient temperature, the sampling probe and filter may be operated without heaters. If the gas stream is above ambient temperature, the sampling probe and filter may be operated at a temperature high enough, but no higher than 121 °C (250 °F), to prevent water condensation on the filter.

(2) Method 9 and the procedures in 40 CFR 60.11 shall be used to determine opacity.

c. In determining compliance with the particulate matter standards in Conditions IV.B.2.b and c above, the Permittee shall use Method 9 and the procedures in 40 CFR 60.11, with the following additions: [40 CFR 60.675(c)(1)]

(1) The minimum distance between the observer and the emission source shall be 4.57 meters (15 feet).

(2) The observer shall, when possible, select a position that minimizes interference from other fugitive emission sources (e.g., road dust). The required observer position relative to the sun (Method 9, Section 2.1) must be followed.

(3) For facilities using wet dust suppression for particulate matter control, a visible mist is sometimes generated by the spray. The water mist must not be confused with particulate matter emissions and is not to be considered a visible emission. When a water mist of this nature is present, the observation of emissions is to be made at a point in the plume where the mist is no longer visible.

d. In determining compliance with the opacity of stack emissions from any baghouse that controls emissions only from an individual enclosed storage bin under Condition IV.B.2.f above, using Method 9, the duration of the Method 9 observations shall be 1 hour (ten 6-minute averages). [40 CFR 60.675(c)(2)]

e. When determining compliance with the fugitive emissions standard for any facility described under Condition IV.B.2.b above, the duration of the Method 9 observations may be reduced from 3 hours (thirty 6-minute averages) to 1 hour (ten 6-minute averages) only if the following conditions apply: [40 CFR 60.675(c)(3)]

(1) There are no individual readings greater than 10 percent opacity; and

(2) There are no more than 3 readings of 10 percent for the 1-hour period.

f. When determining compliance with the fugitive emissions standard for any crusher at

which a capture system is not used as described under Condition IV.B.2.c above, the duration of the Method 9 observations may be reduced from 3 hours (thirty 6-minute averages) to 1 hour (ten 6-minute averages) only if the following conditions apply: [40 CFR 60.675(c)(4)]

(1) There are no individual readings greater than 15 percent opacity; and

(2) There are no more than 3 readings of 15 percent for the 1-hour period.

g. In determining compliance with Condition IV.B.2.e above, the Permittee shall use Method 22 to determine fugitive emissions. The performance test shall be conducted while all affected facilities inside the building are operating. The performance test for each building shall be at least 75 minutes in duration, with each side of the building and the roof being observed for at least 15 minutes. [40 CFR 60.675(d)]

h. For the method and procedure of Condition IV.B.5.c above, if emissions from two or more facilities continuously interfere so that the opacity of fugitive emissions from an individual affected facility cannot be read, the Permittee may use either of the following procedures as alternatives to the reference methods and procedures specified in this Section: [40 CFR 60.675(e)]

(1) Use for the combined emission stream the highest fugitive opacity standard applicable to any of the individual affected facilities contributing to the emissions stream.

(2) Separate the emissions so that the opacity of emissions from each affected facility can be read.

i. If, after 30 days notice for an initially scheduled performance test, there is a delay (due to operational problems, etc.) in conducting any re-scheduled performance test required, the Permittee shall submit a notice to the Director at least 7 days prior to any rescheduled performance test. [40 CFR 60.675(g)]

j. Initial Method 9 performance tests under 40 CFR 60.11 and Condition IV.B.5 of this subsection are not required for: [40 CFR 60.675(h)]

(1) Wet screening operations and subsequent screening operations, bucket elevators, and belt conveyors that process saturated material in the production line up to, but not including the next crusher, grinding mill or storage bin.

(2) Screening operations, bucket elevators, and belt conveyors in the production line downstream of wet mining operations, that process saturated materials up to the first crusher, grinding mill, or storage bin in the production line.

6. Notification Requirements

a. In order to comply with 40 CFR 60.670(d), the Permittee shall submit to the Director the following information about the existing facility being replaced and the replacement piece of equipment. [40 CFR 60.676(a)]

(1) For a crusher, grinding mill, bucket elevator, bagging operation, or enclosed truck or railcar loading station:

(a) The rated capacity in tons per hour of the existing facility being replaced; and

(b) The rated capacity in tons per hour of the replacement equipment.

(2) For a screening operation:

(a) The total surface area of the top screen of the existing screening operation being replaced; and

(b) The total surface area of the top screen of the replacement screening operation.

(3) For a conveyor belt:

(a) The width of the existing belt being replaced; and

(b) The width of the replacement conveyor belt.

(4) For a storage bin:

(a) The rated capacity in tons of the existing storage bin being replaced; and

(b) The rated capacity in tons of replacement storage bins.

b. The Permittee shall submit written reports of the results of all performance tests conducted to demonstrate compliance with the standards set forth in Condition IV.B.2 of this subsection, including reports of opacity observations made using Method 9 to demonstrate compliance with Conditions IV.B.2.b, c and f above, and reports of observations using Method 22 to demonstrate compliance with Condition IV.B.2.e. [40 CFR 60.676(f)]

c. The Permittee of any screening operation bucket elevator, or belt conveyor that processes saturated material and is subject to Condition IV.B.2.h above and subsequently processes unsaturated materials, shall submit a report of this change within 30 days following such change. This screening operation, bucket elevator, or belt conveyor is then subject to the 10 percent opacity limit in Condition IV.B.2.b above and the emission test requirements of 40 CFR 60.11 and of this Section. Likewise a screening operation, bucket elevator, or belt conveyor that processes unsaturated material but subsequently processes saturated material shall submit a report of this change within 30 days following such change. This screening operation, bucket elevator, or belt conveyor is then subject to the no visible emission limit in Condition IV.B.2.h above. [40 CFR 60.676(g)]

C. Permit Shield [A.A.C. R18-2-325]

Compliance with the terms of this Section shall be deemed compliance with the following applicable requirement(s) in effect on the date of permit issuance: A.A.C. R18-2-702.B(1), A.A.C. R18-2-722.B, A.A.C. R18-2-722.D, A.A.C. R18-2-722.F, A.A.C. R18-2-722.G, 40 CFR 60.670(c)(2), 40 CFR 60.670(e), 40 CFR 60.672, 40 CFR 60.675(a), 40 CFR 60.675(b)(2), 40 CFR 60.675(c), 40 CFR 60.675(d), 40 CFR 60.675(e), 40 CFR 60.675(g), 40 CFR 60.675(h), 40 CFR 60.676(a), 40 CFR 60.676(f), and 40 CFR 60.676(g).

V. COAL PREPARATION OPERATIONS

A. Non-New Source Performance Standards (NSPS) Standards

1. Applicability

A non-NSPS affected facility is defined as each coal processing and conveying equipment (including breakers and crushers), coal storage systems, and coal transfer and loading systems which has a capacity of less than 200 tons per day. For each non-NSPS affected facility identified in Attachment "C," refer to the following applicable conditions.

2. Particulate Matter Emission Limitations/Standards

a. The Permittee shall not cause, allow, or permit the discharge of particulate matter into the atmosphere, except as fugitive emissions, in any one hour from any coal preparation plant equipment, in excess of the amounts calculated by one of the following equations: [A.A.C. R18-2-716.B]

(1) For sources having a process weight rate of 60,000 pounds per hour (30 tons per hour) or less, the maximum allowable emissions shall be determined by the following equation:

$E = 4.10P^{0.67}$

where:

E = the maximum allowable particulate emissions rate in pounds-mass per hour

P = the process weight rate in tons-mass per hour

(2) For sources having a process weight rate greater than 60,000 pounds per hour (30 tons per hour), the maximum allowable emissions shall be determined by the following equation:

$E = 55.0P^{0.11} - 40$

where:

E = the maximum allowable particulate emissions rate in pounds-mass per hour

P = the process weight rate in tons-mass per hour

b. For the purposes of Condition V.A.2 above, the total process weight from all similar units employing a similar type process shall be used in determining the maximum allowable emissions of particulate matter. [A.A.C. R18-2-716.D]

c. The Permittee shall not cause or allow to be discharged into the atmosphere from the affected coal preparation operation, any plume or effluent which exhibits an opacity greater than 20%, as determined by Reference Method 9 in 40 CFR Part 60. [A.A.C. R18-2-702.B.2 and 3]

3. Monitoring, Record Keeping, and Reporting Requirements [A.A.C. R18-2-306.A.3.c and -306.A.5]

a. Bi-weekly Monitoring for Stack Sources

(1) Within 180 days of issuance of this permit, the Permittee shall conduct certified Method 9 performance tests in accordance with Section XVIII of Attachment A for the stacks associated with the coal preparation operations, while operating at normal representative working conditions, to establish a baseline opacity level for each of the stacks. Within 30 days of establishing the baseline opacity, the Permittee shall report the results to the Director.

(2) A certified Method 9 observer shall conduct a bi-weekly visual survey of visible emissions from the stacks associated with the coal preparation operations when they are in operation. The Permittee shall keep a record of the name of the observer, the date on which the observation was made, and the results of the observation.

(3) If the observer sees a plume that on an instantaneous basis appears to exceed the baseline opacity level, then the observer shall, if practicable, take a six-minute Method 9 observation of the plume.

(4) If the six-minute opacity of the plume is less than the baseline opacity level, the observer shall make a record of the following:

(a) Name of the observer, location, date, and time of the observation; and

(b) The results of the Method 9 observation.

(5) If the six-minute opacity of the plume exceeds the baseline opacity level, but is less than the applicable opacity standard, the Permittee shall adjust or repair the controls or equipment to reduce opacity to or below the baseline opacity level. The observer shall make a record of the following:

(a) Name of the observer, location, date, and time of the observation;

(b) The results of the Method 9 observation;

(c) Date and time when corrective action was taken; and

(d) Type of corrective action taken.

(6) If the six-minute opacity of the plume exceeds the applicable opacity standard, then the Permittee shall do the following:

(a) Adjust or repair the controls or equipment to reduce opacity to or below the baseline level; and

(b) Report it as an excess emission for opacity.

(7) If corrective actions fail to reduce opacity to or below the baseline level, the Permittee shall adopt the following course of action:

(a) Document all corrective actions; and

(b) Initiate procedures to re-establish the baseline within forty eight hours in accordance with Condition V.A.3.a(8) below.

(8) If necessitated by the results of the bi-weekly monitoring, the Permittee may re-establish the baseline opacity level(s). Re-establishment of the baseline(s) shall be performed utilizing the same procedures used in setting up the initial baseline level(s). Within 30 days of re-establishing the baseline opacity, the Permittee shall report the results to the Director. The report shall also contain a description of the need for re-establishing the baseline(s).

b. Bi-weekly Monitoring for Fugitive Emissions

(1) A certified Method 9 observer shall conduct a bi-weekly visual survey of fugitive emissions from the coal preparation operations when they are in operation.

(2) If the observer, during the visual survey, does not see any plume from any fugitive source that on an instantaneous basis appears to exceed the applicable opacity standard, then the observer shall keep a record of the name of the observer, the date on which the observation was made, and the results of the observation.

(3) If the observer sees a plume from a fugitive source that on an instantaneous basis appears to exceed the applicable opacity standard, then the observer shall, if practicable, take a six-minute Method 9 observation of the plume.

(4) If the six-minute opacity of the plume exceeds the applicable opacity standard, Permittee shall do the following:

(a) Adjust or repair the controls or equipment to reduce opacity to below the opacity standard;

(b) Report it as excess emissions.

(5) If the six-minute opacity of the plume is less than the applicable opacity standard, the observer shall make a record of the following:

(a) Name of the observer, location, date, and time of the observation; and

(b) The results of the Method 9 observation.

B. New Source Performance Standards (NSPS) Standards

1. Applicability [40 CFR 60.250]

An NSPS affected facility is defined as each coal processing and conveying equipment (including breakers and crushers), thermal dryer, coal storage systems, and coal transfer and loading systems which has a capacity of 200 tons per day or more, and which commenced construction or modification after October 24, 1974. For each NSPS affected facility identified in Attachment "C", refer to the following applicable conditions.

2. Particulate Matter Emission Limitations/Standards [40 CFR 60.252(c) and A.A.C. R18-2-331.A.3.f]

a. On and after the date on which the performance test required to be conducted by 40 CFR 60.8 is completed, *the Permittee shall not cause to be discharged into the atmosphere from Coal Mill RM-450, gases which*:

(1) Contain particulate matter in excess of 0.070 g / cm (0.031 gr / cf).

(2) *Exhibit 20 percent opacity or greater*.

b. On and after the date on which the performance test required to be conducted by 40 CFR 60.8 is completed, *the Permittee shall not cause to be discharged into the atmosphere from any coal processing and conveying equipment, coal storage system, or coal transfer and loading system processing coal, gases which exhibit 20 percent opacity or greater*.

3. Monitoring, Record Keeping, and Reporting Requirements [A.A.C. R18-2-306.A.3.c and -306.A.5]

a. The Permittee shall apply the COMS at Coal Mill stack S-453 required under Section III of this Attachment to monitor compliance with Condition V.B.2.a above.

b. *The Permittee shall install*, *calibrate*, maintain, and continuously operate *a monitoring device for the measurement of the temperature of the gas stream at the exit of the Coal Mill RM-450 on a continuous basis*. *The monitoring device shall be certified by the manufacturer to be accurate within ±1.7 °C (±3 °F) and recalibrated annually in accordance with procedures under 40 CFR 60.13(b)*.
[40 CFR 60.253(a)(1) and 253(b) and A.A.C. R18-2-331.A.3.c]

c. Bi-Weekly Monitoring for Stack Sources

The Permittee shall implement the following for all NSPS affected stack sources under Subsection V.B except for Coal Mill stack S-453:

(1) Within 180 days of issuance of this permit, the Permittee shall conduct certified Method 9 performance tests in accordance with Section XVIII of Attachment A for the stacks associated with the coal preparation operations, while operating at normal representative working conditions, to establish a baseline opacity level for each of the stacks. Within 30 days of establishing the baseline opacity, the Permittee shall report the results to the Director.

(2) A certified Method 9 observer shall conduct a bi-weekly (once in two weeks) visual survey of visible emissions from the stacks associated with the coal preparation operations when they are in operation. The Permittee shall keep a record of the name of the observer, the date on which the observation was made, and the results of the observation.

(3) If the observer sees a plume that on an instantaneous basis appears to exceed the baseline opacity level, then the observer shall, if practicable, take a six-minute Method 9 observation of the plume.

(4) If the six-minute opacity of the plume is less than the baseline opacity level, the observer shall make a record of the following:

(a) Name of the observer, location, date, and time of the observation; and

(b) The results of the Method 9 observation.

(5) If the six-minute opacity of the plume exceeds the baseline opacity level, but is less than the applicable opacity standard, the Permittee shall adjust or repair the controls or equipment to reduce opacity to or below the baseline opacity level. The observer shall make a record of the following:

(a) Name of the observer, location, date, and time of the observation;

(b) The results of the Method 9 observation;

(c) Date and time when corrective action was taken; and

(d) Type of corrective action taken.

(6) If the six-minute opacity of the plume exceeds the applicable opacity standard, then the Permittee shall do the following:

(a) Adjust or repair the controls or equipment to reduce opacity to or below the baseline level; and

(b) Report it as an excess emission for opacity.

(7) If corrective actions fail to reduce opacity to or below the baseline level, the Permittee shall adopt the following course of action:

(a) Document all corrective actions; and

(b) Initiate procedures to re-establish the baseline within forty eight hours in accordance with Condition V.B.3.c(8) below.

(8) If necessitated by the results of the bi-weekly monitoring, the Permittee may re-establish the baseline opacity level(s). Re-establishment of the baseline(s) shall be performed utilizing the same procedures used in setting up the initial baseline level(s). Within 30 days of re-establishing the baseline opacity, the Permittee shall report the results to the Director. The report shall also contain a description of the need for re-establishing the baseline(s).

d. Bi-Weekly Monitoring for Fugitive Emissions

(1) A certified Method 9 observer shall conduct a bi-weekly (once in two weeks) visual survey of fugitive emissions from the coal preparation operations when they are in operation.

(2) If the observer, during the visual survey, does not see any plume from any fugitive source that on an instantaneous basis appears to exceed the applicable opacity standard, then the observer shall keep a record of the name of the observer, the date on which the observation was made, and the results of the observation.

(3) If the observer sees a plume from a fugitive source that on an instantaneous basis appears to exceed the applicable opacity standard, then the observer shall, if practicable, take a six-minute Method 9 observation of the plume.

(4) If the six-minute opacity of the plume exceeds the applicable opacity standard, Permittee shall do the following:

(a) Adjust or repair the controls or equipment to reduce opacity to below the opacity standard;

(b) Report it as excess emissions.

(5) If the six-minute opacity of the plume is less than the applicable opacity standard, the observer shall make a record of the following:

(a) Name of the observer, location, date, and time of the observation; and

(b) The results of the Method 9 observation.

4. Test methods and procedures [40 CFR 60.254(b)]

The Permittee shall conduct performance tests once every five years as follows to determine compliance with the particular matter standards set forth in Condition V.B.2 above:

a. EPA Reference Method 5 shall be used to determine the particulate matter concentration. The sampling time and sample volume for each run shall be at least 60 minutes and 0.85

dscm (30 dscf). Sampling shall begin no less than 30 minutes after startup and shall terminate before shutdown procedures begin.

b. EPA Reference Method 9 and the procedures in 40 CFR 60.11 shall be used to determine opacity.

c. The testing results from Section III of this Attachment may be used to satisfy the testing requirement under this Section.

C. Permit Shield [A.A.C. R18-2-325]

Compliance with the terms of this Section shall be deemed compliance with the following applicable requirement(s) in effect on the date of permit issuance: 40 CFR 60.252(c), A.A.C. R18-2-716.B, and A.A.C. R18-2-716.D.

VI. COOLING TOWERS AND OTHER UNCLASSIFIED POINT SOURCES

A. Applicability

Section VI applies to cooling towers and all other point sources which are not subject to conditions required under Sections II through V above.

B. Particulate Matter Emission Limitations/Standards

1. The Permittee shall not cause, allow, or permit the discharge of particulate matter into the atmosphere, except as fugitive emissions, in any one hour from Cooling Towers in excess of the amounts calculated by one of the following equations: [A.A.C. R18-2-730.A]

   a. For sources having a process weight rate of 60,000 pounds per hour (30 tons per hour) or less, the maximum allowable emissions shall be determined by the following equation:

   $E = 4.10P^{0.67}$

   where:

   E = the maximum allowable particulate emissions rate in pounds-mass per hour

   P = the process weight rate in tons-mass per hour

   b. For sources having a process weight rate greater than 60,000 pounds per hour (30 tons per hour), the maximum allowable emissions shall be determined by the following equation:

   $E = 55.0P^{0.11} - 40$

   where:

   E = the maximum allowable particulate emissions rate in pounds-mass per hour

   P = the process weight rate in tons-mass per hour

2. For the purposes of Condition VI.B.1 above, the total process weight from all similar units employing a similar type process shall be used in determining the maximum allowable emission of particulate matter. [A.A.C. R18-2-730.B]

3. The Permittee shall not emit gaseous or odorous materials in such quantities or concentrations as to cause air pollution. [A.A.C. R18-2-730.D]

4. The Permittee shall not cause or allow to be discharged into the atmosphere from Cooling Towers and if applicable, other affected point sources, any plume or effluent which exhibits an opacity greater than 20%, as determined by Reference Method 9 in 40 CFR Part 60. [A.A.C. R18-2-702.B.2 and 3]

C. Monitoring, Recordkeeping and Reporting Requirements [A.A.C. R18-2-306.A.3.a and -306.A.4]

The Permittee shall implement the following for Cooling Towers 1 through 3 and other miscellaneous point source emissions: [A.A.C. R18-2-306.A.3.c and -306.A.5]

1. Within 180 days of issuance of the Permit, the Permittee shall conduct certified EPA Reference Method 9 performance tests in accordance with Section XVIII of Attachment "A" for all affected point sources subject to this section, while operating at normal representative working conditions, to establish a baseline opacity level for each of the point sources. Within 30 days of establishing the baseline opacity, the Permittee shall report the results to the Director.

2. A certified Method 9 observer shall conduct a monthly visual survey of visible emissions from each affected point source subject to this section when it is in operation. The Permittee shall keep a record of the name of the observer, the date on which the observation was made, and the results of the observation.

3. If the observer sees a plume that on an instantaneous basis appears to exceed the baseline opacity level, then the observer shall, if practicable, take a six-minute Method 9 observation of the plume.

4. If the six-minute opacity of the plume is less than the baseline opacity level, the observer shall make a record of the following:

   a. Name of the observer, location, date, and time of the observation; and

   b. The results of the Method 9 observation.

5. If the six-minute opacity of the plume exceeds the baseline opacity level, but is less than the applicable opacity standard, the Permittee shall adjust or repair the controls or equipment to reduce opacity to or below the baseline opacity level. The observer shall make a record of the following:

   a. Name of the observer, location, date, and time of the observation;

   b. The results of the Method 9 observation;

   c. Date and time when corrective action was taken; and

   d. Type of corrective action taken.

6. If the six-minute opacity of the plume exceeds the applicable opacity standard, then the Permittee shall do the following:

   a. Adjust or repair the controls or equipment to reduce opacity to or below the baseline level; and

   b. Report it as an excess emission for opacity.

7. If corrective actions fail to reduce opacity to or below the baseline level, the Permittee shall adopt the following course of action:

   a. Document all corrective actions; and

   b. Initiate procedures to re-establish the baseline within forty eight hours in accordance with Condition VI.C.8 below.

8. If necessitated by the results of the monthly monitoring, the Permittee may re-establish the baseline opacity level(s). Re-establishment of the baseline(s) shall be performed utilizing the same procedures used in setting up the initial baseline level(s). Within 30 days of re-establishing the baseline opacity, the Permittee shall report the results to the Director. The report shall also contain a description of the need for re-establishing the baseline(s).

D. Permit Shield [A.A.C. R18-2-325]

Compliance with the terms of this Section shall be deemed compliance with the following applicable requirement(s) in effect on the date of permit issuance: A.A.C. R18-2-702.B(1), A.A.C. R18-2-730.A, A.A.C. R18-2-730.B, and A.A.C. R18-2-730.D.

VII. FUGITIVE DUST SOURCES

A. Applicability

The conditions of this Section apply to fugitive dust sources for the plant operation. A fugitive dust source means any source of air contaminants which, due to lack of an identifiable emission point or plume, cannot be considered a point source. For the purposes of this Section, conveyor transfer points shall be considered to have identifiable plumes.

B. Emission Limitations/Standards

1. Dust Control Plan [A.A.C. R18-2-306.01.A]

The Permittee shall operate the facility in accordance with Dust Control Plan, Attachment "D" of this Permit.

2. Open Areas, Dry Washes, or Riverbeds [A.A.C. R18-2-604.A and -604.B]

a. The Permittee shall not cause, allow, or permit a building or its appurtenances, or a building or subdivision site, or a driveway, or a parking area, or a vacant lot or sales lot, or an urban or suburban open area to be constructed, used, altered, repaired, demolished, cleared, or leveled, or the earth to be moved or excavated without taking reasonable precautions to limit excessive amounts of particulate matter from becoming airborne.

b. Dust and other types of air contaminants shall be kept to a minimum by good modern practices such as using an approved dust suppressant or adhesive soil stabilizer, paving, covering, landscaping, continuous wetting, detouring, barring access, or other acceptable means.

c. The Permittee shall not cause, allow, or permit a vacant lot, or an urban or suburban open area, to be driven over or used by motor vehicles, trucks, cars, cycles, bikes, or buggies, or by animals such as horses, without taking reasonable precautions to limit excessive amounts of particulates from becoming airborne.

3. Roadways and Streets

a. The Permittee shall not cause, allow, or permit the use, repair, construction or reconstruction of a roadway or alley without taking reasonable precautions to prevent excessive amounts of particulate matter from becoming airborne. Dust and other particulates shall be kept to a minimum by employing temporary paving, dust suppressants, wetting down, detouring or by other reasonable means. [A.A.C. R18-2-605.A]

b. The Permittee shall not cause, allow, or permit transportation of materials likely to give rise to airborne dust without taking reasonable precautions, such as wetting, applying dust suppressants, or covering the load, to prevent particulate matter from becoming airborne. Earth or other material shall be removed from paved streets onto which earth or other material has been transported by trucking or earth moving equipment, erosion by water, or by other means. [A.A.C. R18-2-605.B]

c. The Permittee shall not cause, allow, or permit the cleaning of any site, roadway, or alley without taking reasonable precautions to prevent particulate matter from becoming airborne. Reasonable precautions may include applying dust suppressants. Earth or other

material shall be removed from paved streets onto which earth or other material has been transported by trucking or earth moving equipment, erosion by water, or by other means. [A.A.C. R18-2-804.B]

4. Material Handling [A.A.C. R18-2-606]

The Permittee shall not cause, allow, or permit crushing, screening, handling, transporting, or conveying of materials or other operations likely to result in significant amounts of airborne dust without taking reasonable precautions, such as the use of spray bars, wetting agents, dust suppressants, covering the load, and hoods to prevent excessive amounts of particulate matter from becoming airborne.

5. Storage Piles [A.A.C. R18-2-607]

a. The Permittee shall not cause, allow, or permit organic or inorganic dust producing material to be stacked, piled, or otherwise stored without taking reasonable precautions such as chemical stabilization, wetting, or covering to prevent excessive amounts of particulate matter from becoming airborne.

b. Stacking and reclaiming machinery utilized at storage piles shall be operated at all times with a minimum fall of material and in such manner, or with the use of spray bars and wetting agents, as to prevent excessive amounts of particulate matter from becoming airborne.

6. Evaluation of Fugitive Dust Source Emissions [A.A.C. R18-2-614]

Opacity of an emission from any fugitive dust source shall not be greater than 40% measured in accordance with EPA Reference Method 9.

7. Open Burning [A.A.C. R18-2-602]

Except as provided in A.A.C. R18-2-602.C(1), C(3), and C(4), and except when permitted to do so by either ADEQ or the local officer delegated the authority for issuance of open burning permits, the Permittee shall not conduct open burning.

C. Monitoring, Record Keeping, and Reporting Requirements [A.A.C. R18-2-306.A.3.a]

1. Daily Monitoring for Fugitive Dust Emissions [A.A.C. R18-2-306.A.3.c and -306.A.5]

a. A certified Method 9 observer shall conduct a daily visual survey of fugitive dust emissions when the facility is operating.

b. If the observer, during the visual survey, does not see any plume from any fugitive dust source that on an instantaneous basis appears to exceed the applicable opacity standard, then the observer shall keep a record of the name of the observer, the date on which the observation was made, and the results of the observation.

c. If the observer sees a plume from a fugitive dust source that on an instantaneous basis appears to exceed the applicable opacity standard, then the observer shall, if practicable, take a six-minute Method 9 observation of the plume.

d. If the six-minute opacity of the plume exceeds the applicable opacity standard, the Permittee shall do the following:

(1) Adjust or repair the controls or equipment to reduce opacity to below the opacity standard;

(2) Report it as excess emissions.

e. If the six-minute opacity of the plume is less than the applicable opacity standard, the observer shall make a record of the following:

(1) Name of the observer, location, date, and time of the observation; and

(2) The results of the Method 9 observation.

2. The Permittee shall maintain records of the dates on which any of the activities listed in Conditions VIII.B.2 through VIII.B.7 above were performed and all control measures which were employed. [A.A.C. R18-2-306.A.4]

3. The Permittee shall maintain copies of all open burning permits on file. [A.A.C. R18-2-306.A.4]

D. Permit Shield [A.A.C. R18-2-325]

Compliance with the terms of this Section shall be deemed compliance with the following applicable requirement(s) in effect on the date of permit issuance: A.A.C. R18-2-602, A.A.C. R18-2-604, A.A.C. R18-2-605, A.A.C. R18-2-606, A.A.C. R18-2-607, A.A.C. R18-2-614, and A.A.C. R18-2-804.

VIII. OTHER PERIODIC ACTIVITIES

A. Emission Limitations/Standards

1. Abrasive Blasting

a. The Permittee shall not cause or allow sandblasting or other abrasive blasting without minimizing dust emissions to the atmosphere through the use of good modern practices. Good modern practices include: [A.A.C. R18-2-726]

(1) Wet blasting;

(2) Effective enclosures with necessary dust collecting equipment; or

(3) Any other method as approved by the Director.

b. The Permittee shall not cause to be discharged into the atmosphere from sandblasting or other abrasive blasting operations any emissions greater than 40 percent opacity until April 23, 2006, after which, the opacity of any plume or effluent shall not be greater than 20 percent. [A.A.C. R18-2-702.B.2 and R18-2-702.B.3]

2. Use of Paints

While performing spray painting operations the Permittee shall comply with the following requirements:

a. The Permittee shall not conduct any spray painting operation without minimizing organic solvent emissions. Such operations other than architectural coating and spot painting shall be conducted in an enclosed area equipped with controls containing no less than 96 percent of the overspray. [A.A.C. R18-2-727.A]

b. The Permittee shall not either: [A.A.C. R18-2-727.B]

(1) Employ, apply, evaporate or dry any architectural coating containing photo-chemically reactive solvents for industrial or commercial purposes; or

(2) Thin or dilute any architectural coating with a photo-chemically reactive solvent.

c. For the purposes of part b. and e. of this condition, a photo-chemically reactive solvent shall be any solvent with an aggregate of more than 20 percent of its total volume composed of the chemical compounds classified in paragraphs (1) through (3) of this subsection, or which exceeds any of the following percentage composition limitations, referred to the total volume of solvent: [A.A.C. R18-2-727.C]

(1) A combination of the following types of compounds having an olefinic or cyclo-olefinic type of unsaturation - hydrocarbons, alcohols, aldehydes, esters, ethers, or ketones: five percent

(2) A combination of aromatic compounds with eight or more carbon atoms to the molecule except ethylbenzene: eight percent

(3) A combination of ethylbenzene, ketones having branched hydrocarbon structures, trichloroethylene or toluene: twenty percent.

d. Whenever any organic solvent or any constituent of an organic solvent may be classified from it's chemical structure into more than one of the groups or organic compounds described in subsection c(1) through c(3) of this condition, it shall be considered to be a member of the group having the least allowable percent of the total volume of solvents. [A.A.C. R18-2-727.D]

e. The Permittee shall not dispose by evaporation more than 1.5 gallons of photo-chemically reactive solvent in any one day. [SIP Provision R9-3-527.C]

3. Surface Coating Operations [A.A.C R18-2-730.L]

a. The Permittee shall not operate any surface coating application systems that emits volatile organic compounds in excess of the following:

(1) 4.3 pounds per gallon (0.5 kilograms per liter) of coating, excluding water, delivered to a coating applicator that applies clear coatings.

(2) 3.5 pounds per gallon (0.42 kilograms per liter) of coating, excluding water, delivered to a coating applicator in a coating application system that is air dried or forced warm air dried at temperatures up to 194 °F (90 °C).

(3) 3.5 pounds per gallon (0.42 kilograms per liter) of coating, excluding water, delivered to a coating applicator that applies extreme performance coatings.

(4) 3.0 pounds per gallon (0.36 kilograms per liter) of coating, excluding water, delivered to a coating applicator for all other coatings and application systems.

b. If more than one emission limitation in paragraph XI.A.3.a above applies to a specific coating, then the least stringent emissions limitation shall be applied.

c. All VOC emissions from solvent washings shall be considered in the emissions limitations listed in paragraph XI.A.3.a above, unless the solvent is directed to containers that prevent evaporation to the atmosphere.

4. Vapor Extractors

Materials including solvents or other volatile compounds shall be processed, stored, used and transported in such a manner and by such means that they will not evaporate, leak, escape or be otherwise discharged into the ambient air so as to cause or contribute to air pollution. Where means are available to reduce effectively the contribution to air pollution from evaporation, leakage or discharge, the installation and use of such control methods, devices, or equipment shall be mandatory. [A.A.C. R18-2-730.F]

5. Landfill Operations

The Permittee shall not emit gaseous or odorous materials from the landfill operations in such quantities or concentrations to cause air pollution. [A.A.C. R18-2-730.D]

6. Mobile Sources

a. Classification

The requirements of this condition are applicable to mobile sources which either move while emitting air contaminants or are frequently moved during the course of their utilization but are not classified as motor vehicles, agricultural vehicles, or are agricultural equipment used in normal farm operations. Mobile sources shall not include portable sources as defined in A.A.C. R18-2-101.84. [A.A.C. R18-2-801]

b. Roadway and Site Cleaning Machinery

The Permittee shall not cause, allow, or permit to be emitted into the atmosphere from any roadway and site cleaning machinery smoke or dust for any period greater than ten consecutive seconds, the opacity of which exceeds 40 percent. Visible emissions when starting cold equipment shall be exempt from this requirement for the first ten minutes. [A.A.C. R18-2-804.A]

7. Demolition/Renovation

The Permittee shall comply with the applicable requirements of 40 CFR 61 Subpart M (National Emissions Standards for Hazardous Air Pollutants - Asbestos). [A.A.C. R18-2-1101.A.8]

B. Monitoring, Recordkeeping, and Reporting [A.A.C. R18-2-306.A.3.c]

1. Abrasive Blasting

Each time an abrasive blasting project is conducted, the Permittee shall log in ink or in an electronic format, a record of the following:

a. The date the project was conducted;

b. The duration of the project; and

c. Type of control measures employed.

2. Use of Paints

a. Each time a spray painting project is conducted, the Permittee shall log in ink or in an electronic format, a record of the following:

(1) The date the project was conducted;

(2) The duration of the project;

(3) Type of control measures employed; and

(4) Material Safety Data Sheets for all paints and solvents used in the project.

b. Architectural coating and spot painting projects shall be exempt from the recordkeeping requirements of Condition IX.B.2.a above.

3. Surface coating activities

a. The Permittee shall log in ink or keep in an electronic format records of the following:

(1) The date the project was conducted;

(2) The duration of the project;

(3) Type of control measures employed

(4) Amount of surface coating used for the project

(5) Copies of the material safety and data sheets (MSDS) for each surface coating applied.

b. The Permittee shall use vendor provided information to ensure that the surface coating materials being used satisfy the standards in Condition IX.A.3.a above. In the absence of

vendor provided information, the Permittee shall perform engineering calculations using the density and VOC content of the surface coating in order to compare against the standards set forth in Condition IX.A.3.a above.

4. Mobile Sources

The Permittee shall keep a record of all emissions related maintenance activities performed on the Permittee's mobile sources stationed at the facility as per manufacturer's specifications.

5. Demolition/Renovation

The Permittee shall keep all required records in a file. The required records include the ANESHAP Notification for Renovation and Demolition Activities form and all supporting documents.

C. Permit Shield [A.A.C. R18-2-325]

Compliance with this Section shall be deemed compliance with A.A.C. R18-2-702.B.2, R18-2-702.B.3, R18-2-726, R18-2-727.A, R18-2-727.B, R18-2-727.C, R18-2-727.D, SIP Provision R9-3-527.C, R18-2-730.D, R18-2-730.F, and R18-2-730.L, and R18-2-1101.A.8.

IX. AMBIENT MONITORING REQUIREMENTS

A. This Section is not based on a federal applicable requirement and is state-enforceable only. [A.A.C. R18-2-306.B.2]

B. PM_{10} Monitoring

The Permittee shall maintain and operate ambient PM_{10} samplers at two sites previously approved by the Director. The network shall comply with the following requirements:

1. General Requirements

a. Samplers: R&P Partisol dichotomous samplers, or equivalent Federal Reference Method (FRM) or Federal Equivalent Method (FEM) samplers approved by USEPA.

b. Particle sizes to be measured: fine and coarse.

2. Location of PM_{10} Sites and Sampling Frequency

a. Site locations for the PM_{10} samplers shall remain the same as approved previously by ADEQ. If the Department concludes that other locations are preferable and feasible at a future date, the site locations shall be changed.

b. Samples shall be collected on the national 6-day midnight to midnight sampling schedule. In the event that one of the three samplers malfunctions during a scheduled 24-hour period, special 24-hour samples using all three samplers shall be collected (regardless of the 6-day sampling schedule) starting as soon as practicable after the correction of the malfunction problem.

c. Sampling, as may be required by the Department during a facility upset or failure of air pollution control equipment, shall supersede the normal 6-day sampling schedule.

3. Sample Laboratory Analysis

a. A laboratory analysis shall be performed on both fine and coarse filter for three samples, one with the highest total PM_{10} mass, one with the lowest PM_{10} mass, and one with the PM_{10} mass closest to the average of the quarter. The laboratory analysis shall be done in accordance with applicable sections and appendices of the most current version of 40 CFR Parts 50 and 58 and Quality Assurance Handbook for Air Pollution Measurement

Systems, Volume II, U.S. Environmental Protection Agency.

b. Each sample in the two size ranges shall be weighed and their concentrations calculated, totaled, and then reported as 24-hour concentrations of total PM_{10} in standard micrograms per cubic meter. The results for each of the two size ranges shall also be reported.

c. The following elemental mass concentrations shall be determined and recorded as 24-hour average concentrations expressed as microgram per cubic meter: Aluminum (Al), Arsenic (As), Barium (Ba), Beryllium (Be), Cadmium (Cd), Calcium (Ca), Chlorine (Cl), Chromium (Cr), Copper (Cu), Iron (Fe), Lead (Pb), Manganese (Mn), Mercury (Hg), Nickel (Ni), Phosphorus (P), Potassium (K), Selenium (Se), Silicon (Si), Sodium (Na), Strontium (Sr), Sulfur (S), Titanium (Ti), Vanadium (V), Zinc (Zn), Zirconium (Zr).

4. Quality Assurance

a. All samplers shall be operated, calibrated, and maintained in accordance with the procedures set forth in the respective manufacturer's instruction manuals and in accordance with applicable sections and appendices of the most current version of 40 CFR Parts 50 and 58 and Quality Assurance Handbook for Air Pollution Measurement Systems, Volume II, U.S. Environmental Protection Agency. The samplers shall be sited, maintained, and operated in accordance with the applicable requirements of Appendix J of 40 CFR Part 50, Appendix A of 40 CFR Part 58, and Appendix E of 40 CFR Part 58.

b. The Permittee shall maintain, calibrate, and operate a second dichotomous PM_{10} sampler of the same brand and model as is currently required. This second unit shall be used to concurrently measure PM_{10} at one of the sites in operation. These collocated samplers shall be operated on the same sampling schedule to determine PM_{10} precision for the PCC particulate monitoring network. PM_{10} precision data shall be calculated and reported as required by Appendix A of 40 CFR Part 58.

c. The Permittee shall conduct performance audits of the monitoring equipment in accordance with the requirements pertaining to sampler accuracy as specified in Appendix A of 40 CFR Part 58. The performance audits shall be conducted by a qualified independent auditor under contract to the Permittee at least once a year.

d. The Permittee shall conduct technical systems audits of its ambient air monitoring program consistent with the latest revision of the applicable sections of the Quality Assurance Handbook for Air Pollution Measurement Systems, Volume II, U.S. Environmental Protection Agency. The technical systems audits shall be conducted by a qualified independent auditor under contract to the Permittee at least once in every three (3) years.

e. The Permittee shall also participate in technical systems audits and/or performance audits periodically conducted by the Department. Such audits conducted by the Department may substitute for the audits required of the Permittee corresponding to that frequency period.

5. Data Reduction

a. The Permittee shall calculate the quarterly and annual summary statistics for PM_{10} data in accordance with procedures in the most recent revision of 40 CFR Part 50 Appendix K.

b. The Permittee shall calculate the precision and accuracy statistics in accordance with procedures in the most recent revision of 40 CFR Part 58 Appendix A.

c. Valid data recovery shall meet the EPA minimum data completeness requirement of 75 percent or the percentage specified in the applicable sections of the most recent revision of 40 CFR Part 50.

(1) Valid data shall refer to all observations collected for the specific monitoring purpose;

(2) For filter based (non-continuous) measurements, data completeness shall be based on quarterly data recovery.

6. Reports and Data Submittal

a. The Permittee shall submit to the Director, quarterly and annual reports pertaining to the PM_{10} measurements and the quality control and assurance (QA/QC) data collected pursuant to this section. The quarterly and annual reporting schedule should follow the current EPA reporting schedule as described in 40 CFR 58.35. Summary data and reporting frequencies shall be consistent with EPA reporting requirements; the frequency of reporting and the due date depends on type of data. Two copies of the quarterly and annual reports should be mailed, one to the Air Assessment Section and the other to the Compliance Section of the Air Quality Division of ADEQ.

b. The quarterly and annual reports shall contain the following information, as appropriate. All concentration data shall be presented in micrograms per cubic meter.

(1) Sample date;

(2) Site name;

(3) Individual sample data that include every sample scheduled to be collected during the reporting period or the reason why the sample is missing;

(4) Data summaries based on EPA data rules, including, but not limited to, the following:

(a) Particulate mass concentration in microgram per cubic meter in the fine size range;

(b) Particulate mass concentration in microgram per cubic meter in the coarse size range;

(c) Total PM_{10} concentration for each measurement;

(d) Precision measurements from the collocated monitor for total PM data collected each quarter;

(e) Average Total PM concentration for the quarter;

(f) Results of laboratory analysis performed for the elemental mass concentrations required pursuant to Condition IX.B.3 above; and

(g) QA/QC data (i.e., precision and accuracy statistics), as applicable

(5) Data recovery statistics

c. In addition, to confirm data validation by the Permittee, all data reports should include copies of all appropriate supporting documentation (field data sheets, flow checks, calibrations etc.), including, but not limited to, the following:

(1) Copies of laboratory reports, if applicable;

(2) Copies of all applicable quality control and field reports (e.g., precision checks, flow checks, and calibrations, audit reports); and

(3) Documentation of problems and corrective actions, and explanations for discrepancies

d. All quarterly and annual reports shall be submitted as follows, both electronically by CD or diskette and in paper copy form:

(1) The preferred electronic format for the PM sample data is the Department's Air Assessment Ambient Database (AAAD) format (a template of the format with explanation of the data fields and their contents will be provided by the Department), but comma delimited text or Excel spreadsheet is also acceptable.

(2) The electronic format for the summary data may be in a word processor table or a spreadsheet.

(3) AAAD parameter names and flags shall be used or, the information on flags/ qualifiers and naming shall be provided.

e. All fine, coarse, and total PM_{10} data shall be reported in both standard and actual conditions.

f. Notwithstanding the reporting and data submittal requirements of this section, units shall be consistent with the most recent EPA standards (NAAQS) and reporting requirements. If EPA standards or reporting requirements change, the data reporting format and units shall be changed accordingly.

g. All data submitted to the Director shall be reviewed, quality assured, and certified by the Permittee.

C. Meteorological Monitoring

1. The Permittee shall continue to maintain and operate a meteorological monitoring station to record wind speed, vector wind direction, standard deviation of wind direction, Δt, and relative humidity. This monitoring shall be installed, maintained, and operated in accordance with applicable sections and appendices of the most current version of Quality Assurance Handbook for Air Pollution Measurement Systems, Volume IV, Meteorological Measurements and consistent with the monitoring protocol originally approved by the Director prior to the installation of the station, addressing all general requirements, meteorological station operations, and quality assurance initiatives.

2. The meteorological data measurements shall be made continuously. In the event of system malfunction, the unit shall be repaired or replaced within 48 hours. Monitoring shall resume as soon as practicable after the correction of the malfunction problem.

3. The Permittee shall conduct annual audits of the meteorological monitoring station consistent with applicable sections and appendices of the most current version of Quality Assurance Handbook for Air Pollution Measurement Systems, Volume IV, Meteorological Measurements, utilizing a qualified independent auditor under contract to the Permittee.

4. The Permittee shall provide electronic files of the meteorological data in the Department's Data Collection System (DCS) format to be collected automatically once per day by the Department's DCS computer via the File Transfer Protocol (ftp).

   a. The daily data files produced in any day shall be available at least once per that day, be in a consistent format, and be accessible at times acceptable to the Department.

   b. The raw data for upload shall contain the following:

      (1) Date and hour of each measurement at each site; and

      (2) Hourly average meteorological parameters specified above, in the appropriate measurement units, per the monitoring protocol.

5. Reports

   a. A report summarizing the meteorological data measurements collected pursuant to this section shall be submitted before the 90th day of the following quarter. An annual report

summarizing the quality assurance data shall be submitted before the 90th day of the quarter following the fourth quarter of the calendar year.

b. The quarterly reports shall contain the following information:

(1) Daily meteorological data in DCS format corrected by the Permittee;

(2) Data recovery averages;

(3) Any field service activities; and

(4) Any other information required in the monitoring protocol.

c. Two paper and two electronic copies of the quarterly and annual reports shall be mailed, one of each to the Air Assessment Section and the other to the Compliance Section of the Air Quality Division of the Department.

ATTACHMENT "C": EQUIPMENT LIST

Air Quality Control Permit No. 35426
For
Phoenix Cement Company

TABLE C-1: PROCESS EQUIPMENT

Process	Equipment Type	Equipment ID Number	Date of Mfg.	Manufacturer	Model Num.	Serial Num.	Max Capacity	Applicability				Control Device
								40 CFR 63 Subpart LLL	40 CFR 60 Subpart Y	40 CFR 60 Subpart OOO	AZ Article 7 Rule	
Raw Material Primary and Secondary Crushing and Storage	Apron Feeder	AF-101	1988	Nico	FD-4255	906	500 tph			X		
	Apron Feeder	AF-102	1988	Nico	FD-4255	905	100 tph			X		
	Apron Feeder	AF-103	2004	Metso	AF5-30FS-10.25-15HP	NA	700 tph			X		
	Surge Bin	B-101	1959	NA	NA	NA	97 tons				X	
	Belt Conveyor	BC-101	1959	Hewitt Robins	NA	NA	950 tph				X	
	Belt Conveyor	BC-101A	1963	Hewitt Robins	NA	NA	950 tph				X	
	Belt Conveyor	BC-101B	1963	Hewitt Robins	NA	NA	950 tph				X	
	Belt Conveyor	BC-101C	1988	S&W Steel	NA	NA	1,000 tph			X		
	Belt Conveyor	BC-101D	1988	S&W Steel	NA	NA	1,000 tph			X		
	Belt Conveyor	BC-102	1959	Hewitt Robins	NA	NA	670 tph				X	
	Belt Conveyor	BC-102A	1959	Hewitt Robins	NA	NA	670 tph				X	
	Belt Conveyor	BC-102B	1988	S&W Steel	NA	NA	550 tph			X		
	Belt Conveyor	BC-103A	1959	Hewitt Robins	NA	NA	1200 tph				X	
	Belt Conveyor	BC-103B	1959	Hewitt Robins	NA	NA	1200 tph				X	
	Belt Conveyor	BC-103C	1988	S&W Steel	NA	NA	500 tph			X		
	Belt Conveyor	BC-103D	1988	S&W Steel	NA	NA	300 tph			X		
	Belt Conveyor	BC-103E	2002	NA	NA	NA	10 tph			X		
	Belt Conveyor	BC-103F	2002	NA	NA	NA	10 tph			X		
	Mill Scale Hopper	MSH-001	2005	AEF	NA	NA	100 tons					
	Apron Feeder	AF-104	2004	Metso	AF4-24FS-20.83-7.5 hp	NA	10 tph				X	
	Scavenger Screw	SCV-104	2004	Metso	NA	NA	NA				X	
	Belt Conveyor	BC-104	1959	Hewitt Robins	NA	NA	667 tph			X		DC-201A
	Belt Conveyor	BC-104A	1988	NA	NA	NA	1000 tph			X		
	Belt Conveyor	BC-104B	1988	NA	NA	NA	700 tph				X	
	Belt Conveyor	BC-214	1959	Hewitt Robins	NA	NA	667 tph				X	
	Primary Crusher	CR-101	1958	Allis Chalmers	60x48 A-1	3808	900 tph				X	
	Secondary Crusher	CR-102	1958	Williams	580	NA	700 tph			X		DC-202
	Tertiary Crusher	CR-103	2003	Atlantic Coast Crushers	FSM-1212-BB	NA	NA				X	
	Wobler Feeder	F-101	1958	Universal	NA	424X92	NA				X	
	Vibrating Screen	VS-101	1958	Hewitt Robins	72X144	VD-6563	NA				X	
	Vibrating Screen	VS-102	1958	Hewitt Robins	72X92	VD-8182	NA				X	
	Vibrating Screen	VS-103	1958	Hewitt Robins	72X92	VD-8183	NA				X	DC-100
	Rotary Feeder	RF-201	1986	Smoot	FT-12	NA	NA				X	DC-202
	Dryer	FR-201	1966				NA				X	DC-202
	Sample Mill	RM-201	1959	C.E. Raymond	3036 H.S.	58105	NA				X	
	Weigh Feeder	W-101	1959	Jeffery	5100	29129	50 tph				X	
	Screw Conveyor	SC-101	1986	RJ Ruff	NA	NA	NA					

Process	Equipment Type	Equipment ID Number	Date of Mfg.	Manufacturer	Model Num.	Serial Num.	Max Capacity	Applicability				Control Device
								40 CFR 63 Subpart LLL	40 CFR 60 Subpart Y	40 CFR 60 Subpart OOO	AZ Article 7 Rule	
	Fly Ash Bin	B-201	1986	NA	NA	NA	187 tons				X	DC-100
Raw Material Storage & Handling	Belt Conveyor	BC-201	1959	Hewitt Robins	NA	NA	500 tph				X	
	Belt Conveyor	BC-201A	1959	Hewitt Robins	NA	NA	500 tph				X	
	Belt Conveyor	BC-202	1959	Hewitt Robins	NA	NA	500 tph	X				
	Belt Conveyor	BC-203	1959	Hewitt Robins	NA	NA	500 tph	X				
	Belt Conveyor	BC-205	1959	Hewitt Robins	NA	NA	350 tph	X				DC-205
	Belt Conveyor	BC-209	1959	Hewitt Robins	NA	NA	75 tph	X				
	Belt Conveyor	BC-210	1959	Hewitt Robins	NA	NA	700 tph	X				
	Belt Conveyor	BC-211	1959	Hewitt Robins	NA	NA	290 tph	X				
	Belt Conveyor	BC-212	1959	Hewitt Robins	NA	NA	290 tph	X				DC-205
	Belt Conveyor	BC-213A	1996	Norfab	NA	NA	280 tph			X		
	Belt Conveyor	BC-301	1958	Hewitt Robins	NA	NA	350 tph	X				DC-304
	Belt Conveyor	BC-206	1959	Hewitt Robins	NA	NA	350 tph	X				
	Belt Conveyor	BC-213	1959	Hewitt Robins	NA	NA	290 tph	X				
	Additive Hopper	HP-ADD	1996	Norfab	NA	NA	NA			X		
	Reclaimer	R-201	1983	R.E.	NA	NA	500 tph				X	
	Reclaimer	R-202	1983	R.E.	NA	NA	500 tph				X	
	Stacker	ST-201	1959	Hewitt Robins	NA	NA	500 tph				X	
	Stacker	ST-202	1959	Hewitt Robins	NA	NA	500 tph				X	
	Detachable Trailer	TT-201	1959	Hewitt Robins	NA	NA	500 tph				X	
	Detachable Trailer	TT-202	1959	Hewitt Robins	NA	NA	500 tph				X	
	Detachable Trailer	TT-203	1959	Hewitt Robins	NA	NA	500 tph				X	
	Detachable Trailer	TT-204	1959	Hewitt Robins	NA	NA	500 tph				X	
Raw Grinding System No. 1	Air Slide	AC-301	1997	Fuller	100 MM	NA	22 tph	X				DC-304
	Air Slide	AC-302	1990	Fuller	350 MM	NA	380tph	X				DC-304
	Air Slide	AC-316	1990	Fuller	480 MM	NA	760 tph	X				DC-301
	Raw Mix Bin	B-301	1959	NA	NA	NA	278 tons	X				DC-304
	Belt Conveyor	BC-300	1990	S&W Steel	NA	NA	360 tph	X				DC-304
	Belt Conveyor	BC-303	1990	S&W Steel	NA	NA	215 tph	X				DC-301
	Dryer	FR-300	1990	Conamara	Size 25	NA	24 MM btu/hr	X				DC-301
	Dryer	FR-301	1959	Hauck	NMG180A	NA	21.5 MM btu/hr	X				DC-301
	Ball Mill	BM-301	1959	FLSmidth	12x19	NA	NA	X				DC-301
	Elevator	E-301	1990	Rexnord	NA	1636-2612-D	600 tph	X				DC-301
	Separator	SE-300	1990	Sepax	400-1F	NA	NA	X				DC-301
	Cyclone	CY-300	1990	FLSmidth	NA	NA	NA	X				DC-301
	Cyclone	CY-301	1990	FLSmidth	NA	NA	NA	X				DC-301
	FK Pump	PN-301	1958	Fuller	H-10-8214 Z conv.	NA	NA	X				DC-304
	FK Pump	PN-341	1972	Fuller	10" Type Z Conv.	NA	NA	X				DC-304
	Screw Conveyor	SC-301	1984	NA	NA	NA	NA	X				DC-301
	Weigh Feeder	W-301	1984	S&W Steel	NA	NA	215 tph	X				DC-304
	Screw Conveyor	SC-310	1984	NA	NA	NA	NA	X				DC-304
Swing Grinding System No. 2	Air Slide	AC-304	1959	Fuller	350 MM	NA	380 tph	X				DC-305
	Air Slide	AC-305	1959	Fuller	400 MM	NA	475 tph	X				DC-305
	Air Slide	AC-306	1959	Fuller	250 MM	NA	166 tph	X				DC-305
	Air Slide	AC-311	1959	Fuller	250 MM	NA	166 tph	X				DC-305
	Air Slide	AC-313	1959	Fuller	250 MM	NA	166 tph	X				DC-305
	Air Slide	AC-314	1959	Fuller	250 MM	NA	166 tph	X				DC-305
	Air Slide	AC-317	1958	Fuller	480 MM	NA	760 tph	X				DC-302
	Air Slide	AC-321	1959	Fuller	400 MM	NA	475 tph	X				DC-305
	Air Slide	AC-322	1959	Fuller	400 MM	NA	475 tph	X				DC-305
	Air Slide	AC-329	1959	Fuller	400 MM	NA	475 tph	X				DC-305
	Raw Mix Clinker Bin	B-302	1959	NA	NA	NA	200 Tons	X				DC-305
	Belt Conveyor	BC-304	1958	Hewitt Robins	NA	NA	100 tph	X				DC-305
	Ball Mill	BM-302	1959	FLSmidth	12x19	NA	NA	X				DC-302

Process	Equipment Type	Equipment ID Number	Date of Mfg.	Manufacturer	Model Num.	Serial Num.	Max Capacity	Applicability				Control Device
								40 CFR 63 Subpart LLL	40 CFR 60 Subpart Y	40 CFR 60 Subpart OOO	AZ Article 7 Rule	
	Cyclone	CY-302	1958	NA	NA	NA	NA	X				DC-302
	Dryer BM302	FR-302	1959	Hauck	NMG180A	NA	21.5 MM btu/hr	X				DC-302
	Bucket Elevator	E-302	1958	Jeffery	NA	NA	420 tph	X				DC-305
	FK Pump	PN-302	1958	Fuller	H2-8-8215	NA	NA	X				DC-305
	Screw Conveyor	SC-303	1959	NA	NA	NA	210 tph	X				DC-302
	Screw Conveyor	SC-304	1959	NA	NA	NA	210 tph	X				DC-302
	Screw Conveyor	SC-308	1959	NA	NA	NA	NA	X				DC-302
	Screw Conveyor	SC-311	1959	NA	NA	NA	NA	X				DC-305
	Separator	SE-303	1958	C.E. Raymond	14-0 D.W.	58089	NA	X				DC-302
	Separator	SE-304	1958	C.E. Raymond	14-0 D.W.	58090	NA	X				DC-302
	Weigh Feeder	W-303	1981	Ramsey	NA	NA	3 tph	X				
Feed Blending	Air Slide	AC-607	1995	BMH	500 MM	NA	760 tph	X				DC-601
	Air Slide	AC-608	1995	BMH	500 MM	NA	760 tph	X				DC-602
	Raw Meal Silo	S-601	1959	NA	NA	NA	1500 tons	X				DC-601
	Raw Meal Silo	S-602	1959	NA	NA	NA	1600 tons	X				DC-601
	Homogenizing Silo	S-605	1959	NA	NA	NA	2000 tons	X				DC-602
	Air Slide	AC-609	2001 2002	FBH	400 MM	NA	475 tph	X				DC-603
	FK Pump	PN-601	2001 2002	FBH	350-M-00-10428-116	NA	NA	X				DC-604A
	FK Pump	PN-602	2001 2002	FBH	350-M-00-10428-116-1	NA	NA	X				DC-603
	Air Slide	AC-600	1995	BMH	400 MM	NA	475 tph	X				DC-606
	Air Slide	AC-601	1995	BMH	400 MM	NA	475 tph	X				DC-606
	Air Slide	AC-601A	1995	BMH	200 MM	NA	NA	X				DC-601
	Air Slide	AC-602	1995	BMH	400 MM	NA	475 tph	X				DC-605
	Air Slide	AC-602A	1995	BMH	200 MM	NA	NA	X				DC-601
	Air Slide	AC-603	1995	BMH	400 MM	NA	475 tph	X				DC-605
	Air Slide	AC-604	2001	FBH	400 MM	NA	475 tph	X				DC-603
	Air Slide	AC-606	1995	BMH	400 MM	NA	475 tph	X				DC-603
	Bucket Elevator	E-600	1995	Rexnord	1636-2812G	23361-1A	595 tph	X				DC-601
Kiln Feed	Alleviator	AM-407	2001 2002	FBH	90-0830-21320-532	106	NA	X				DC-409
	Bin	B-407	2001 2002	Schuff Steel	NA	NA	60 tons	X				DC-410
	Air Slide	AC-408	2001 2002	FBH	350 MM	NA	380 tph	X				DC-410
	Air Slide	AC-409	2001 2002	FBH	350 MM	NA	380 tph	X				DC-410
	Air Slide	AC-410	2001 2002	FBH	350 MM	NA	380 tph	X				DC-410
	Air Slide	AC-413	2001 2002	FBH	350 MM	NA	380 tph	X				DC-411
	Air Slide	AC-414	2001 2002	FBH	350 MM	NA	380 tph	X				DC-410
	Air Slide	AC-415	2001 2002	FBH	350 MM	NA	380 tph	X				DC-410
	Feeder	WS-404	2001 2002	Pfister	NA	NA	NA	X				DC-410
	Feeder	WS-405	2001 2002	Schenck	DLM-26	NA	280 tph	X				DC-410
Raw Grinding System No. 3	Apron Feeder	AF-360	2001 2002	Rexnord	R2342-K21	NA	410 tph	X				DC-431
	Air Slide	AC-360	2001 2002	F.B.H.	300 MM	NA	285 tph	X				DC-411

Process	Equipment Type	Equipment ID Number	Date of Mfg.	Manufacturer	Model Num.	Serial Num.	Max Capacity	Applicability				Control Device
								40 CFR 63 Subpart LLL	40 CFR 60 Subpart Y	40 CFR 60 Subpart OOO	AZ Article 7 Rule	
	Air Slide	AC-361	2001 2002	F.B.H.	300 MM	NA	285 tph	X				DC-411
	Air Slide	AC-362	2001 2002	F.B.H.	400 MM	NA	475 tph	X				DC-411
	Air Slide	AC-363	2001 2002	F.B.H.	400 MM	NA	475 tph	X				DC-367
	Air Slide	AC-364	2001 2002	F.B.H.	400 MM	NA	475 tph	X				DC-368
	Belt Conveyor	BC-360	2001 2002	Conveyor Engineering	NA	NA	315 tph	X				DC-366
	Belt Conveyor	BC-361	2001 2002	Conveyor Engineering	NA	NA	500 tph	X				DC-366
	Belt Conveyor	BC-363	2001 2002	Conveyor Engineering	NA	NA	184 tph	X				DC-366
	Bucket Elevator	E-360	2001 2002	Rexnord	2126-2410F	NA	184 tph	X				DC-366
	Raw Mill Seal Bin	B-360	2001 2002	Schuff Steel	NA	NA	220 Tons	X				DC-366
	Cyclone	CY-360	2001 2002	FLSmidth	L6300	NA	NA	X				DC-431
	Cyclone	CY-361	2001 2002	FLSmidth	L6300	NA	NA	X				DC-431
	Raw Mill	RM-306	2001 2002	FLSmidth	FRM38/170	NA	NA	X				DC-431
	Separator	SE-360	2001 2002	FLSmidth	RAR37.5	NA	NA	X				DC-431
	Spillage Conveyor	BC-362	2001 2002	Rexnord	NA	NA	NA	X				DC-431
	FK Pump	PN-402	2001 2002	FLSmidth	8-H2Z-00-10428-116-2	NA	NA	X				DC-367
	FK Pump	PN-403	2001 2002	FLSmidth	8-H2Z-00-10428-116	NA	NA	X				DC-367
	Screw Conveyor	SC-430	2001 2002	FBH	10M320C166	NA	NA	X				DC-431
	Screw Conveyor	SC-431	2001 2002	FBH	10M320C166	NA	NA	X				DC-431
	Screw Conveyor	SC-432	2001 2002	FBH	10M320C166	NA	NA	X				DC-367
Pyroprocessing System	Eductor	FMRS-404	2004	Fox Venturi	4"	NA	0.5 tph	X				DC-431
	Pre-Heater	PH-404	2001 2002	FLSmidth	NA	NA	NA	X				DC-431
	Pre-Heater	PH-405	2001 2002	FLSmidth	NA	NA	NA	X				DC-431
	Pre-Heater	PH-406	2001 2002	FLSmidth	NA	NA	NA	X				DC-431
	Pre-Heater	PH-407	2001 2002	FLSmidth	NA	NA	NA	X				DC-431
	Pre-Heater	PH-408	2001 2002	FLSmidth	NA	NA	NA	X				DC-431
	Calciner	CAL-404	2001 2002	FLSmidth	ILC Low Nox	NA	NA	X				DC-431
	Kiln	K-404	2001 2002	FLSmidth	4400x48000	NA	NA	X				DC-431
	Clinker Cooler	CC-404	2001 2002	FLSmidth	SF3X4F	NA	NA	X				DC-445

Process	Equipment Type	Equipment ID Number	Date of Mfg.	Manufacturer	Model Num.	Serial Num.	Max Capacity	Applicability				Control Device
								40 CFR 63 Subpart LLL	40 CFR 60 Subpart Y	40 CFR 60 Subpart OOO	AZ Article 7 Rule	
	Screw Conveyor	SC-461	2001 2002	Transmission Products	NA	NA	26 tph	X				DC-445
	Screw Conveyor	SC-462	2001 2002	Transmission Products	NA	NA	45 tph	X				DC-445
	Screw Conveyor	SC-463	2001 2002	Transmission Products	NA	NA	45 tph	X				DC-445
	Screw Conveyor	SC-465	2001 2002	Transmission Products	NA	NA	26 TPH	X				DC-446
	Screw Conveyor	SC-466	2001 2002	Transmission Products	NA	NA	71 tph	X				DC-446
	Screw Conveyor	SC-467	2001 2002	Transmission Products	NA	NA	71 tph	X				DC-446
Clinker Transport	Belt Conveyor	BC-402	2001 2002	Conveyor Engineering	NA	NA	300 tph	X				DC-448
	Belt Conveyor	BC-403	2001 2002	Conveyor Engineering	NA	NA	300 tph	X				DC-212
	Bucket Elevator	E-404	2001 2002	Rexnord	1626-1410B	NA	190 tph	X				DC-447
	Pan Conveyor	DBC-404	2001 2002	Rexnord	AFT	NA	190 TPH	X				DC-446
	Clinker Bin	B-404	2001 2002	Schuff Steel	NA	NA	1500 tons	X				DC-447
	Vibrating Feeder	VF-404	2001 2002	Jeffery	NF 3605	1006919A	165 tph	X				DC-447
Clinker Storage and Transport	Belt Conveyor	BC-216	2001 2002	Watkins	NA	NA	336 tph	X				DC-213
	Belt Conveyor	BC-217	2001 2002	Watkins	NA	NA	336 tph	X				DC-214
	Belt Conveyor	BC-309	2001 2002	Watkins	NA	NA	336 tph	X				DC-316
	Clinker Storage Dome	DO-200	2001 2002	Dome Technology	NA	NA	100,000 tons	X				DC-213
	Clinker Storage Dome	DO-201	2001 2002	Dome Technology	NA	NA	25,000 tons	X				DC-214
	Belt Conveyor	BC-310	2001 2002	Conveyor Engineering	NA	NA	300 tph	X				DC-312
Coal and Coke Handling and Grinding	Belt Conveyor	BC-460	1974	Thomas Conveyor	NA	NA	250 tph		X			DC-460
	Belt Conveyor	BC-461	1974	Thomas Conveyor	NA	NA	250 tph		X			
	Belt Conveyor	BC-462	1974	Thomas Conveyor	NA	NA	250 tph		X			DC-450
	Belt Conveyor	BC-463	1974	Thomas Conveyor	NA	NA	250 tph		X			DC-460
	Belt Feeder	BC-464	1974	Thomas Conveyor	NA	NA	32 tph		X			
	Crusher	CR-460	1974	Pennsylvania Crusher	TK-8-32B	4160-02	250 tph		X			DC-460
	Vibrating Feeder	F-460	1974	Westinghouse	V4ALT-PLAN-10T-SPL	NA	150 tph		X			
	Vibrating Feeder	F-461	1974	Westinghouse	V4ALT-PLAN-10T-SPL	NA	150 tph		X			
	Screw Feeder	SC-465-0	1974	NA	NA	NA	32 tph		X			
	Belt Conveyor	BC-451	2001 2002	Transmission Products	NA	NA	150 tph		X			DC-452
	Belt Conveyor	BC-453	2001 2002	Transmission Products	NA	NA	150 tph		X			DC-452
	Coal Bin	B-450	2001 2002	Schuff Steel	NA	NA	400 tons		X			DC-452
	Pet-Coke Bin	B-451	2001 2002	Schuff Steel	NA	NA	175 tons				X	DC-452

Process	Equipment Type	Equipment ID Number	Date of Mfg.	Manufacturer	Model Num.	Serial Num.	Max Capacity	Applicability				Control Device
								40 CFR 63 Subpart LLL	40 CFR 60 Subpart Y	40 CFR 60 Subpart OOO	AZ Article 7 Rule	
	Weigh Feeder	W-450	2001 2002	Schenck	DMO	NA	33.9 tph		X			DC-451
	Weigh Feeder	W-451	2001 2002	Schenck	DMO	NA	33.9 tph				X	DC-451
	Belt Conveyor	BC-454	2001 2002	Conveyor Engineering	NA	NA	34 tph		X			DC-451
	Separator	SE-450	2001 2002	FLSmidth	KF-128-A160	481-104-579	NA	X	X			DC-453
	Coal Mill	RM-450	2001 2002	FLSmidth	FRM19/26	NA	NA	X	X			DC-453
	Screw Conveyor	SC-456	2001 2002	FLSmidth	MSDS-A 290	NA	NA		X			DC-453
	Rail Car Hopper	HP-460A	1974	NA	NA	NA	44.5		X			
	Rail Car Hopper	HP-460B	1974	NA	NA	NA	44.5		X			
	Coal Unelevator	UE-461	1974	NA	NA	NA	NA		X			
	Coal Hopper	HP-461	1974	NA	NA	NA	100 tons		X			
	Coke Hopper	HP-462	1974	NA	NA	NA	100 tons		X			
Coal and Coke Grinding & Firing	Pulverized Fuel Bin	B-452	2001 2002	Schuff Steel	NA	NA	20 tons		X			DC-454
	Pulverized Fuel Bin	B-453	2001 2002	Schuff Steel	NA	NA	20 tons		X			DC-455
	Screw Conveyor	SC-453	2001 2002	Conveyor Engineering	NA	NA	48 tph	X				DC-453
	Screw Conveyor	SC-454	2001 2002	Conveyor Engineering	NA	NA	48 tph	X				DC-454/455
	Screw Conveyor	SC-455	2001 2002	Conveyor Engineering	NA	NA	48 tph	X				DC-454/455
	Feeder	PW-452	2001 2002	Pfister	DRW 3.10	NA	NA	X				DC-431
	Feeder	PW-451	2001 2002	Pfister	DRW 3.10	NA	NA	X				DC-431
Mill Feed/ Clinker & Gypsum Handling	Gypsum Bin	B-300	Pre-3/24/98	NA	NA	NA	100 tons	X				
	Clinker Bin	B-303	1959	NA	NA	NA	200 tons	X				DC-306
	Clinker Bin	B-340	1974	NA	NA	NA	100 tons	X				DC-342
	Gypsum Bin	B-341	1974	NA	NA	NA	40 tons	X				DC-342
	Belt Conveyor	BC-303A	1998	Airbelt	12"	NA	5 tph	X				DC-304
	Screw Conveyor	SC-312	1974	NA	NA	NA	NA	X				DC-306
	Weigh Feeder	W-345	1998	Tecnetics	WF10	NA	5 tph	X				
	Belt Conveyor	BC-312	2001 2002	Conveyor Engineering	NA	NA	300 tph	X				DC-312
	Belt Conveyor	BC-313	2001 2002	Conveyor Engineering	NA	NA	300 tph	X				DC-306
	Belt Conveyor	BC-350	2001 2002	Conveyor Engineering	NA	NA	176 tph	X				DC-352
	Clinker Bin	B-350	2001 2002	Schuff Steel	NA	NA	250 tons	X				DC-312
	Gypsum Bin	B-351	2001 2002	Schuff Steel	NA	NA	100 tons	X				DC-312
	Scavenger Conveyor	SC-350	2001 2002	Schenck	NA	NA	NA	X				DC-352
	Scavenger Conveyor	SC-351	2001 2002	Schenck	NA	NA	NA	X				DC-352
	Weigh Feeder	W-350	2001 2002	Schenck	DMO	NA	161 tph	X				DC-352

Process	Equipment Type	Equipment ID Number	Date of Mfg.	Manufacturer	Model Num.	Serial Num.	Max Capacity	Applicability				Control Device
								40 CFR 63 Subpart LLL	40 CFR 60 Subpart Y	40 CFR 60 Subpart OOO	AZ Article 7 Rule	
	Weigh Feeder	W-351	2001 2002	Schenck	DMO	NA	15 tph	X				DC-352
Finish Milling	Gypsum Hopper	HP-301	2001 2002	NA	NA	NA	NA	X				
	Gypsum Feeder	F-301	2001 2002	Oldenburg Stamler	BF-7Q-0-100	13609	300 tph	X				
Finish Mill No. BM 303	Air Slide	AC-307	1959	Fuller	250 MM	NA	166 tph	X				DC-303
	Air Slide	AC-308	1959	Fuller	400 MM	NA	475 tph	X				DC-303
	Air Slide	AC-309	1959	Fuller	250 MM	NA	166 tph	X				DC-303
	Aft Slide	AC-312	1959	Fuller	250 MM	NA	166 tph	X				DC-303
	Air Slide	AC-315	1959	Fuller	250 MM	NA	166 tph	X				DC-306
	Air Slide	AC-318	1958	Fuller	480 MM	NA	760 tph	X				DC-306
	Air Slide	AC-323	1959	Fuller	400 MM	NA	475 tph	X				DC-303
	Air Slide	AC-324	1959	Fuller	400 MM	NA	475 tph	X				DC-303
	Air Slide	AC-330	1959	Fuller	400 MM	NA	475 tph	X				DC-303
	Air Slide	AC-331	1959	Fuller	250 MM	NA	166 tph	X				DC-306
	Belt Conveyor	BC-305	1958	Hewitt Robins	NA	NA	100 tph	X				DC-306
	Ball Mill	BM-303	1959					X				DC-303
	Cyclone	CY-303	1958	NA	NA	NA	NA	X				DC-303
	Bucket Elevator	E-303	1958	Jeffery	NA	NA	420 tph	X				DC-306
	Screw Conveyor	SC-305	1959	NA	NA	NA	NA	X				DC-303
	Screw Conveyor	SC-309	1959	NA	NA	NA	NA	X				DC-303
	Screw Conveyor	SC-306	1959	NA	NA	NA	210 tph	X				DC-303
	Separator	SE-305	1958	C.E. Raymond	14-0 D.W.	58091	210 tph	X				DC-303
	Separator	SE-306	1958	C.E. Raymond	14-0 D.W.	58092	NA	X				DC-303
	Weigh Feeder	W-305	1981	Ramsey	NA	NA	3 tph	X				
Finish Mill No. BM 304	Air Slide	AC-340	1972	Fuller	350 MM	NA	380 tph	X				DC-341
	Air Slide	AC-341	1972	Fuller	250 MM	NA	166 tph	X				DC-340
	Air Slide	AC-342	1972	Fuller	250 MM	NA	166 tph	X				DC-340
	Air Slide	AC-343	1972	Fuller	250 MM	NA	166 tph	X				DC-340
	Air Slide	AC-344	1972	Fuller	250 MM	NA	166 tph	X				DC-340
	Air Slide	AC-346	1983	Fuller	100 MM	NA	22 tph	X				DC-309
	Air Slide	AC-347	1983	Fuller	100 MM	NA	22 tph	X				DC-308
	Fly Ash Bin	B-342	1983	Brown Tank	NA	NA	500 tons	X				DC-309
	Hydrated Lime Bin	B-343	1983	Brown Tank	NA	NA	105 tons	X				DC-308
	Belt Conveyor	BC-341	1974	Airbelt	NA	NA	10 tph	X				DC-344
	Belt Conveyor	BC-342	1974	Airbelt	NA	NA	10 tph	X				DC-344
	Belt Conveyor	BC-343	1997	Cambelt	CWR2445-6	NA	21.7 tph	X				DC-340
	Ball Mill	BM-304	1972	Allis Chalmers	9.5 X 33	NA	NA	X				DC-341
	Bucket Elevator	E-340	1972	Rexnord	NA	4120-04	300 tph	X				DC-341
	FK Pump	PN-340	1972	Fuller	8" Z Conv	NA	125 tph	X				DC-343
	Screw Conveyor	SC-320	1974	NA	NA	NA	NA	X				DC-306 DC-341 DC-343
	Screw Conveyor	SC-316	1974	NA	NA	NA	NA	X				DC-306
	Screw Conveyor	SC-317	1974	NA	NA	NA	NA	X				DC-306
	Screw Conveyor	SC-340	1974	NA	NA	NA	204 tph	X				DC-340
	Screw Conveyor	SC-341	1974	NA	NA	NA	NA	X				DC-340
	Screw Conveyor	SC-342	1974	NA	NA	NA	NA	X				DC-341
	Separator	SE-307	1972	C.E. Raymond	16-0 D.W.	NA	NA	X				DC-340
	Weigh Belt Conveyor	W-340	1974	Merrick	NA	NA	50 tph	X				DC-341
	Weigh Belt Conveyor	W-341	1974	Merrick	NA	NA	5 tph	X				DC-341
	Weigh Belt	W-342	1974	NA	NA	NA	NA	X				

Process	Equipment Type	Equipment ID Number	Date of Mfg.	Manufacturer	Model Num.	Serial Num.	Max Capacity	Applicability				Control Device
								40 CFR 63 Subpart LLL	40 CFR 60 Subpart Y	40 CFR 60 Subpart OOO	AZ Article 7 Rule	
	Conveyor											
	Hopper w/ Scale	WS-340	1974	NA	NA	NA	NA	X				DC-309
	Hopper w/ Scale	WS-341	1974	NA	NA	NA	NA	X				DC-308
Clinker Grinding OK Mill	FK Pump	PN-350	1959	Fuller	10" Z Conv	NA	NA	X				DC-350
	FK Pump	PN-351	1959	Fuller	10" Z Conv	NA	NA	X				DC-350
	Air Slide	AC-350	2001 2002	F.B.H.	300 MM	NA	285 tph	X				DC-350
	Air Slide	AC-351	2001 2002	F.B.H.	300 MM	NA	285 tph	X				DC-350
	Air Slide	AC-352	2001 2002	F.B.H.	300 MM	NA	285 tph	X				DC-350
	Air Slide	AC-353	2001 2002	F.B.H.	300 MM	NA	285 tph	X				DC-350
	Air Slide	AC-354	2001 2002	F.B.H.	300 MM	NA	285 tph	X				DC-350
	Air Slide	AC-355	2001 2002	F.B.H.	300 MM	NA	285 tph	X				DC-350
	Surge Bin	B-352	2001 2002	Schuff Steel	NA	NA	NA	X				DC-352
	Belt Conveyor	BC-351	2001 2002	Conveyor Engineering	NA	NA	241 tph	X				DC-352
	Bucket Elevator	E-350	2001 2002	Rexnord	1626-1810B	NA	240 tph	X				DC-352
	Chain Conveyor	DCH-350	2001 2002	Rexnord	20"	NA	65 tph	X				DC-350
	Chain Conveyor	DCH-351	2001 2002	Rexnord	20"	NA	65 tph	X				DC-350
	Dryer	FR-350	2001 2002	Conamara	NA	NA	15 MM btu/hr	X				DC-350
	OK Mill	RM-305	2001 2002	FLSmidth	OK 33-4	NA	NA	X				DC-350
	Separator	SE-308	2001 2002	FLSmidth	OKS 70	NA	NA	X				DC-350
Bag Packing	Air Slide	AC-501	1985	Halliburton	400 MM	NA	475 tph	X				DC-501
	Air Slide	AC-502	1985	Halliburton	400 MM	NA	475 tph	X				DC-505
	Air Slide	AC-505	1959	Fuller	400 MM	NA	475 tph	X				DC-504
	Air Slide	AC-506	1959	Fuller	400 MM	NA	475 tph	X				DC-501
	Air Slide	AC-513	1960	Fuller	300 MM	NA	285 tph	X				DC-505
	Air Slide	AC-514	2005	Fuller	400 MM	NA	475 tph	X				DC-504
	Air Slide	AC-515	2005	Fuller	400 MM	NA	475 tph	X				DC-504
	Air Slide	AC-516	1959	Fuller	200 MM	NA	118 tph	X				DC-505
	Air Slide	AC-519	1959	Fuller	400 MM	NA	475 tph	X				DC-507
	Air Slide	AC-518	1959	Fuller	200 MM	NA	118 tph	X				DC-507
	Bin	B-501	2005	TWI	NA	NA	NA	X				DC-501
	Bin	B-502	2005	TWI	NA	NA	NA	X				DC-505
	Belt Conveyor	BBG-501	2005	Vento Matic	NA	NA	NA	X				DC-511
	Belt Conveyor	BC-501	2005	Vento Matic	NA	NA	NA	X				DC-511
	Bucket Elevator	BE-501	1959	Link Belt	NA	NA	NA	X				DC-501
	Bucket Elevator	BE-502	1959	Link Belt	NA	NA	NA	X				DC-505
	Bag Packer	BP-503	2005	Vento Matic	NA	NA	NA	X				DC-511
	Bag Cutter	BS-501	2005	Vento Matic	NA	NA	NA	X				DC-511
	FK Pump	PN-501	2005	Fuller	10" Z Conv	NA	NA	X				DC-504
	Rotary Screen	RSC-501	2005	Vento Matic	NA	NA	NA	X				DC-511
	Screw Conveyor	SC-501	1982	NA	NA	NA	NA	X				DC-501/505

Process	Equipment Type	Equipment ID Number	Date of Mfg.	Manufacturer	Model Num.	Serial Num.	Max Capacity	Applicability				Control Device
								40 CFR 63 Subpart LLL	40 CFR 60 Subpart Y	40 CFR 60 Subpart OOO	AZ Article 7 Rule	
	Screw Conveyor	SC-502	1982	NA	NA	NA	NA	X				DC-501/505
	Screw Conveyor	SC-503	2005	Vento Matic	NA	NA	NA	X				DC-511
	Screw Conveyor	SC-504	2005	Vento Matic	NA	NA	NA	X				DC-511
	Screw Conveyor	SC-505	2005	Vento Matic	NA	NA	NA	X				DC-511
	Screw Conveyor	SC-506	2005	Vento Matic	NA	NA	NA	X				DC-511
	Screw Conveyor	SC-507	2005	Vento Matic	NA	NA	NA	X				DC-511
	Screw Conveyor	SC-508	2005	Vento Matic	NA	NA	NA	X				DC-501/505
	Vibratory Feeder	VF-501	2005	Vento Matic	NA	NA	NA	X				DC-501
	Vibratory Feeder	VF-502	2005	Vento Matic	NA	NA	NA	X				DC-505
Bulk Loading	East Side Scale Loadout	AC-507	1959	Fuller	400 MM	NA	475 tph	X				DC-503
	Air Slide	AC-508	1985	Halliburton	400 MM	NA	475 tph	X				DC-504
	West Side Scale Loadout	AC-509	1985	Halliburton	400 MM	NA	475 tph	X				DC-504
	Air Slide	AC-511	1976	Fuller	400 MM	NA	475 tph	X				DC-501/505
	Air Slide	AC-512	1976	Fuller	200 MM	NA	118 tph	X				DC-504
	West Side Scale Loadout	LSP	2003	DCL	UN600EV-06VT	NA	1282 tph	X				DC-504
	East Side Scale Loadout	LSP	2003	DCL	UN600EV-06VT	NA	1282 tph	X				DC-503
	Silo 15/16 Loadout	LSP	1976	Midwesco	NA	NA	1282 tph	X				DC-507
Cement Storage	Screw Conveyor	SC-510	2001 2002	NA	NA	NA	NA	X				DC-510
	Silo 15	S-15	1976	NA	NA	NA	753 tons	X				DC-512
	Silo 16	S-16	1976	NA	NA	NA	753 tons	X				DC-512
	South Finish Silo 1	S-1	1959	NA	NA	NA	2764 tons	X				DC-508
	South Finish Silo 2	S-2	1959	NA	NA	NA	3257 tons	X				DC-508
	South Finish Silo 6	S-6	1959	NA	NA	NA	3156 tons	X				DC-508
	South Finish Silo 7	S-7	1959	NA	NA	NA	3244 tons	X				DC-508
	South Finish Silo 11	S-11	1959	NA	NA	NA	881 tons	X				DC-508
	South Finish Silo 12	S-12	1959	NA	NA	NA	881 tons	X				DC-508
	Cement Silo 3	S-3	1959	NA	NA	NA	3136 tons	X				DC-510
	Cement Silo 4	S-4	1959	NA	NA	NA	3029 tons	X				DC-510
	Cement Silo 5	S-5	1959	NA	NA	NA	2922 tons	X				DC-510
	Cement Silo 8	S-8	1959	NA	NA	NA	3136 tons	X				DC-510
	Cement Silo 9	S-9	1959	NA	NA	NA	3012 tons	X				DC-510
	Cement Silo 10	S-10	1959	NA	NA	NA	2922 tons	X				DC-510
	Cement Silo 13	S-13	1959	NA	NA	NA	834 tons	X				DC-510
	Cement Silo 14	S-14	1959	NA	NA	NA	650 tons	X				DC-510
Cooling Towers	Mill Cooling Tower	CTWR-300	1959	Marley	NA	NA	NA				X	
	RM-305 Cooling Tower	CTWR-302	2001 2002	Marley	AV-61002, G-235	NA	NA				X	
	Kiln - Raw Mill Cooling Tower	CTWR-400	2001 2002	Marley	AV-61002, G-235	NA	NA				X	

NA = Not Applicable or Not Available

TABLE C-2: CONTROL DEVICE

Control Device	Date of Installation	Manufacture	Rated Flow (cfm)
DC-100	1986	Dusty Dustless	1000
DC-201A	2006	FLS Airtech	4000
DC-202	1985	Ultra Industry	5000
DC-205	1959	Norblo	5832
DC-212	2002	Sly	2000
DC-213	2002	Sly	4000
DC-214	2002	Sly	4000
DC-301	1984	Fabric Filters NW	60000
DC-302	1959	Norblo	32700
DC-303	1959	Norblo	32700
DC-304	1959	Norblo	12000
DC-305	1959	Norblo	12000
DC-306	1959	Norblo	12000
DC-308	1983	Ultra Ind.	2500
DC-309	1983	FlexKleen	2400
DC-312	2002	FBH	6050
DC-316	2002	FBH	3100
DC-340	1972	Mikropul	20000
DC-341	1972	Mikropul	10000
DC-342	1972	Mikropul	5000
DC-343	1998	Mikropul	1500
DC-344	1972	Mikropul	5000
DC-350	2002	FBH	228000
DC-352	2002	FBH	10000
DC-366	2002	FBH	8400
DC-367	2002	FBH	1850
DC-368	2002	FBH	1600
DC-409	2002	FBH	11350
DC-410	2002	FBH	2950
DC-411	2002	FBH	1300
DC-431	2002	FBH	259200
DC-445	2002	FBH	138000
DC-446	2002	FBH	2900
DC-447	2002	FBH	7150

DC-448	2002	FBH	3100
DC-450	2002	FBH	3000
DC-451	2002	FBH	3720
DC-452	2002	FBH	5360
DC-453	2002	FBH	38800
DC-454	2002	FBH	30
DC-455	2002	FBH	30
DC-460	1974	FBH	6000
DC-501	2003	BHA	8210
DC-503	1959	Mikropul	3000
DC-504	1959	Pangborn	6000
DC-505	2004	BHA	8210
DC-507	1980	Mikropul	755
DC-508	1986	Ecolaire	5000
DC-510	2002	FBH	13300
DC-511	2005	Scientific	13000
DC-512	2005	FLS Airtech	8000
DC-601	1972	Mikropul	7200
DC-602	1988	Mikropul	7500
DC-603	1996	Fuller Kovako	2500
DC-604A	1998	Wheelabrator	1500
DC-605	1996	Fuller Kovako	2500
DC-606	1996	Wheelabrator	500

ATTACHMENT "D": DUST CONTROL PLAN

Air Quality Control Permit No. 35426
For
Phoenix Cement Company

I. INTRODUCTION

A. Requirements and Policy

Arizona Administrative Code Title 18, Chapter 2, (AAC R18-2) Article 6 requires that an operator take reasonable precautions to prevent excess amounts of particulate matter (PM) from becoming airborne from sources of fugitive dust, including open areas, roadways and streets, material handling, and storage piles. Under AAC R18-2-610, opacity from any nonpoint source shall not be greater than 40 percent, measured in accordance with the Arizona Testing Manual, Reference Method 9.

Phoenix Cement Company's (PCC's) dust control goals include ongoing road-paving activities, watering or otherwise treating unpaved roads and parking areas, taking other reasonable precautions to prevent excess amounts of PM from becoming airborne, and to maintain compliance with the 40 percent opacity standard. PCC will accomplish these goals with diligent use of practical methods, equipment, and procedures currently utilized at the Clarkdale facility. PCC is committed to operating as an environmentally responsible producer of quality cement products.

B. Background

The PCC Clarkdale facility includes a cement manufacturing plant and an adjacent quarry. The cement plant utilizes rotary kilns fired by coal/coke, coal, and natural gas to produce cement from various types of materials, including limestone, volcanic ash, and mill scale.

Limestone and other types of rock are blasted and transported by haul trucks from the quarry to the primary crusher or td stockpiles. Crushed rock is routed to surge piles fur subsequent transfer to the secondary crusher. The secondary crusher is used in conjunction with feeders and screens to further reduce the size of the rock that is sent to raw mill storage bays.

The crushed rock is conveyed from the storage bays to the raw mill for grinding via the rock bin, elevator and separator. Milled material (raw meal) is transported to the blending system, and then it is transported into feed bins from which the meal is discharged to the pyroprocessing system.

The heart of the Portland cement manufacturing process is the pyroprocessing system, namely, Kiln 4. This system transforms the raw mix into clinkers, which are gray, glass-hard, spherically shaped nodules. Emission sources in the clinker handling and storage facility are eliminated by the use of indoor clinker storage enclosures (domes).

During normal operations, PCC utilizes water trucks regularly on haul roads and other unpaved roads to prevent excessive airborne dust generation. Water trucks operate on a regular basis whenever roads are in use.

II. CONTROL PLAN

A. Roads

Various types of dust control measures may be utilized by PCC to minimize fugitive emissions from unpaved roads. Haul roads between the quarry and the primary crusher are regularly watered on all days on which haul trucks operate. Other unpaved roads on the facility are regularly watered

and/or treated with dust suppressants and/or chemical stabilizers as necessary to minimize dust from vehicular traffic and high winds.

This Dust Control Plan requires PCC to ensure that water trucks operate on each day on which haul trucks and/or other vehicular traffic occurs. If water trucks are not operated on a particular day, PCC shall record the date and the reason for non-operation.

B. Open Areas

Open areas, such as unpaved parking areas and other level areas, are regularly watered and/or treated with dust suppressants and/or chemical stabilizers as necessary to minimize dust from vehicular traffic and high winds. PCC shall ensure that water trucks operate on each day on which vehicular traffic occurs in unpaved open areas. If water trucks are not operated on a particular day, PCC shall record the date and the reason for non-operation.

C. Storage Piles

PCC has eliminated outdoor clinker storage and handling with the construction of two domed enclosures. A significant reduction in airborne fugitive dust was achieved by construction of the domes. Only raw feed is stored in outdoor storage piles. PCC adds dust suppressants and/or water to the raw feed during the primary and secondary crushing processes. As a result, the raw feed piles contain high-moisture, treated material which does not become airborne in excessive amounts.

PCC shall ensure that raw feed stored in outdoor storage piles has sufficient moisture content, or has been otherwise sufficiently treated with dust suppressants, to prevent excessive airborne dust generation. If excessive airborne dust is observed, PCC shall record the date and determine the reason(s) for the event.

D. Other Control Techniques

PCC is continually evaluating and, when practical, implementing a program to pave plant roads. In addition, PCC continues to evaluate binders, dust suppressants, and construction techniques that provide a safe, economical and environmentally responsible means of managing fugitive dust.

III. MONITORING

PCC shall conduct a visual survey on a daily basis to ensure that excessive amounts of fugitive dust are not becoming airborne. If excessive dust is observed, PCC shall record the date and the reasons.

ATTACHMENT "E": OPERATION AND MAINTENANCE PLAN

Air Quality Control Permit No. 35426
For
Phoenix Cement Company

OPERATION AND MAINTENANCE PLAN
FOR
AFFECTED SOURCES UNDER 40 CFR 63 SUBPART LLL

PHOENIX CEMENT COMPANY
CLARKDALE, ARIZONA

Prepared for:

PHOENIXCEMENT

PHOENIX CEMENT COMPANY
P.O. Box 428
3000 West Cement Plant Road
Clarkdale, Arizona 86324

Submitted to:

ARIZONA DEPARTMENT OF ENVIRONMENTAL QUALITY
1110 West Washington Street
Phoenix, Arizona 85007-2935

Prepared by:

Gault Group, Inc.
2813 East Camelback Road, Suite 400
Phoenix, Arizona 85016

November 2005

TABLE OF CONTENTS

PART A ELEMENTS OF THE OPERATING AND MAINTENANCE PLAN 1

1.0 INTRODUCTION 2

2.0 AFFECTED SOURCES AND APPLICABLE REQUIREMENTS 3

3.0 OPERATION AND MAINTENANCE PROCEDURES 12
- 3.1 KILN AND CLINKER COOLER 12
- 3.2 COMS 12
- 3.3 DUST COLLECTORS 12

4.0 CORRECTIVE ACTIONS 13

5.0 PROCEDURES FOR COMBUSTION SYSTEM INSPECTIONS 14

6.0 OPACITY MONITORING PROCEDURES 15

PART B SPECIFIC PROCEDURES AND TECHNICAL DOCUMENTS

1.0 COMS INSTALLATION, OPERATION, AND MAINTENANCE PROCEDURES

2.0 DUST COLLECTOR OPERATION AND MAINTENANCE PROCEDURES

3.0 CORRECTIVE ACTION PROCEDURES

4.0 INSPECTION PROCEDURES - COMBUSTION SYSTEM COMPONENTS
- 4.1 KILN BURNER INSPECTION AND MAINTENANCE
- 4.2 PREHEATER INSPECTION AND MAINTENANCE

5.0 EPA METHOD 22 AND EPA METHOD 9

PART A

ELEMENTS OF THE OPERATING AND MAINTENANCE PLAN

1.0 INTRODUCTION

This Operations and Maintenance Plan (O&M Plan) specifies the procedures and actions that must be conducted for all affected sources under Subpart LLL of Title 40 of the Code of Federal Regulations Part 63 (40 CFR 63), and their associated air pollution control devices (APCDs), if applicable. The procedures in the O&M Plan, for proper operation and maintenance of affected sources and APCDs, are specified to ensure compliance with the applicable emission limits and operating limits of Subpart LLL.

The O&M Plan is designed to be a manual for Phoenix Cement Company (PCC) operators and technicians that are responsible for maintaining affected sources and APCDs in proper operating condition. The Plan outlines procedures for operation and maintenance to provide continuing compliance; specific actions to be taken when monitoring indicates such actions are needed; inspection procedures; opacity monitoring procedures; and required installation, calibration and quality assurance specifications for continuous opacity monitoring systems (COMS) and continuous temperature monitors.

This O&M Plan consists of two parts: Part A and Part B. Part A includes the following sections. Section 1.0 is the introduction. Section 2.0 provides a summary of all affected sources and APCDs, applicable emission limits and operating limits, and applicable monitoring requirements. Section 3.0 briefly describes general operation and maintenance for affected sources and APCDs. Section 4.0 briefly describes corrective actions to be taken when visible emissions are observed from the raw mill and finish mill APCDs. Section 5.0 provides procedures to be used during inspections of components of the combustion system of the in-line kiln/raw mill. Section 6.0 contains procedures to be used for periodic monitoring of affected sources subject to opacity standards for raw mills, finish mills, material handling and storage sources.

Part B includes specific, detailed procedures and technical documents. Section 1.0 contains specific procedures for installation, operation, calibration and maintenance of the COMS. Section 2.0 includes a detailed summary of the operation and maintenance requirements for affected-source dust collectors. Section 3.0 contains a detailed summary of the corrective actions required when visible emissions are observed during visual emissions observations. Section 4.0 includes inspection procedures for components of the combustion system of the in-line kiln/raw mill. Section 5.0 contains the specific procedures of the United States Environmental Protection Agency (EPA) Method 22 and Method 9.

2.0 Affected Sources and Applicable Requirements

Table 2-1 is a summary of affected sources, applicable emission limits, operating limits, and monitoring requirements of Subpart LLL.

TABLE 2-1: AFFECTED SOURCES AND APPLICABLE REQUIREMENTS

Process	Emission Source				Emission & Operating Limits	Monitoring Requirements
	Source No.	Dust Collector		Source Name		
Raw Grinding System No.1	AC-301	Fabric Filter NW	DC-301	Air Slide	10% opacity	Daily Method 22
	AC-302	Fabric Filter NW	DC-301	Air Slide	10% opacity	Daily Method 22
	AC-316	Fabric Filter NW	DC-301	Air Slide	10% opacity	Daily Method 22
	B-301	Norblo	DC-304	Raw Mix Bin	10% opacity	Monthly Method 22 - O&M Plan
	BC-300	Norblo	DC-304	Belt Conveyor	10% opacity	Monthly Method 22 - O&M Plan
	BC-303	Norblo	DC-304	Belt Conveyor	10% opacity	Monthly Method 22 - O&M Plan
	BM-301	Fabric Filter NW	DC-301	Ball Mill	10% opacity	Daily Method 22
	E-301	Fabric Filter NW	DC-301	Elevator	10% opacity	Daily Method 22
	FR-300	Fabric Filter NW	DC-301	Gas Dryer	10% opacity	Daily Method 22
	FR-301	Fabric Filter NW	DC-301	Gas Dryer	10% opacity	Daily Method 22
	SE-300	Fabric Filter NW	DC-301	Separator	10% opacity	Daily Method 22
	CY-300	Fabric Filter NW	DC-301	Cyclone	10% opacity	Daily Method 22
	CY-301	Fabric Filter NW	DC-301	Cyclone	10% opacity	Daily Method 22
	PN-301	Norblo	DC-304	FK Pump	10% opacity	Monthly Method 22 - O&M Plan
	PN-341	Norblo	DC-304	FK Pump	10% opacity	Monthly Method 22 - O&M Plan
	SC-301	Fabric Filter NW	DC-301	Screw Conveyor	10% opacity	Daily Method 22
	SC-310	Norblo	DC-304	Screw Conveyor	10% opacity	Monthly Method 22 - O&M Plan
	W-301	Norblo	DC-304	Weigh Feeder	10% opacity	Monthly Method 22 - O&M Plan
Swing Grinding System No.2	AC-304	Norblo	DC-302	Air Slide	10% opacity	Daily Method 22
	AC-305	Norblo	DC-302	Air Slide	10% opacity	Daily Method 22
	AC-306	Norblo	DC-302	Air Slide	10% opacity	Daily Method 22
	AC-311	Norblo	DC-302	Air Slide	10% opacity	Daily Method 22

Process	Emission Source				Emission & Operating Limits	Monitoring Requirements
	Source No.	Dust Collector		Source Name		
	AC-313	Norblo	DC-302	Air Slide	10% opacity	Daily Method 22
	AC-314	Norblo	DC-302	Air Slide	10% opacity	Daily Method 22
	AC-317	Norblo	DC-302	Air Slide	10% opacity	Daily Method 22
	AC-321	Norblo	DC-302	Air Slide	10% opacity	Daily Method 22
	AC-322	Norblo	DC-302	Air Slide	10% opacity	Daily Method 22
	AC-329	Norblo	DC-302	Air Slide	10% opacity	Daily Method 22
	B-302	Norblo	DC-305	Raw Mix Clinker Bin	10% opacity	Monthly Method 22 - O&M Plan
	BC-304	Norblo	DC-305	Belt Conveyor	10% opacity	Monthly Method 22 - O&M Plan
	BM-302	Norblo	DC-302	Ball Mill	10% opacity	Daily Method 22
	CY-302	Norblo	DC-302	Cyclone	10% opacity	Daily Method 22
	E-302	Norblo	DC-305	Bucket Elevator	10% opacity	Monthly Method 22 - O&M Plan
	FR-302	Norblo	DC-302	Gas Dryer	10% opacity	Daily Method 22
	PN-302	Norblo	DC-305	FK Pump	10% opacity	Monthly Method 22 - O&M Plan
	SC-303	Norblo	DC-302	Screw Conveyor	10% opacity	Daily Method 22
	SC-304	Norblo	DC-302	Screw Conveyor	10% opacity	Daily Method 22
	SC-308	Norblo	DC-302	Screw Conveyor	10% opacity	Daily Method 22
	SC-311	Norblo	DC-305	Screw Conveyor	10% opacity	Monthly Method 22 - O&M Plan
	SE-303	Norblo	DC-302	Separator	10% opacity	Daily Method 22
	SE-304	Norblo	DC-302	Separator	10% opacity	Daily Method 22
	W-303	-	-	Weigh Feeder	10% opacity	Monthly Method 22 - O&M Plan
Blending and Kiln Feed	AC-607	Mikro Pul	DC-601	Air Slide	10% opacity	Monthly Method 22 - O&M Plan
	AC-608	Mikro Pul	DC-601/602	Air Slide	10% opacity	Monthly Method 22 - O&M Plan
	S-601	Mikro Pul	DC-601	Raw Meal Silo	10% opacity	Monthly Method 22 - O&M Plan
	S-602	Mikro Pul	DC-601	Raw Meal Silo	10% opacity	Monthly Method 22 - O&M Plan
	S-605	Mikro Pul	DC-602	Homogenizing Silo	10% opacity	Monthly Method 22 - O&M Plan
	AC-609	Fuller	DC-603	Air Slide (411.AS2)	10% opacity	Monthly Method 22 - O&M Plan
	PN-601	Wheelabrator	DC-604A	FK Pump	10% opacity	Monthly Method 22 - O&M Plan
	PN-602	Fuller	DC-603	FK Pump	10% opacity	Monthly Method 22 - O&M Plan
	AC-600	Fuller/ Wheelabrator	DC-605/606	Air Slide	10% opacity	Monthly Method 22 - O&M Plan

Process	Emission Source				Emission & Operating Limits	Monitoring Requirements
	Source No.	Dust Collector		Source Name		
	AC-601	Wheelabrator	DC-606	Air Slide	10% opacity	Monthly Method 22 - O&M Plan
	AC-601A	Mikro Pul	DC-601	Air Slide	10% opacity	Monthly Method 22 - O&M Plan
	AC-602	Fuller	DC-605	Air Slide	10% opacity	Monthly Method 22 - O&M Plan
	AC-602A	Mikro Pul	DC-601	Air Slide	10% opacity	Monthly Method 22 - O&M Plan
	AC-603	Wheelabrator	DC-604A	Air Slide	10% opacity	Monthly Method 22 - O&M Plan
	AC-604	Fuller	DC-603	Air Slide	10% opacity	Monthly Method 22 - O&M Plan
	AC-606	Mikro Pul	DC-601	Air Slide	10% opacity	Monthly Method 22 - O&M Plan
	E-600	Mikro Pul	DC-601	Bucket Elevator	10% opacity	Monthly Method 22 - O&M Plan
Kiln Feed	AM-407	Fuller	DC-409	Alleviator	10% opacity	Monthly Method 22 - O&M Plan
	B-407	Fuller	DC-410	Bin	10% opacity	Monthly Method 22 - O&M Plan
	AC-408	Fuller	DC-410	Air Slide	10% opacity	Monthly Method 22 - O&M Plan
	AC-409	Fuller	DC-410	Air Slide	10% opacity	Monthly Method 22 - O&M Plan
	AC-410	Fuller	DC-410	Air Slide	10% opacity	Monthly Method 22 - O&M Plan
	AC-413	Fuller	DC-411	Air Slide	10% opacity	Monthly Method 22 - O&M Plan
	AC-414	Fuller	DC-410	Air Slide	10% opacity	Monthly Method 22 - O&M Plan
	AC-415	Fuller	DC-410	Air Slide	10% opacity	Monthly Method 22 - O&M Plan
	WS-404	Fuller	DC-410	Feeder	10% opacity	Monthly Method 22 - O&M Plan
	WS-405	Fuller	DC-410	Feeder	10% opacity	Monthly Method 22 - O&M Plan
Raw Grinding System No.3	AF-360	Fuller	DC-431	Apron Feeder	10% opacity	COMS [4]
	AC-360	Fuller	DC-411	Air Slide	10% opacity	Monthly Method 22 - O&M Plan
	AC-361	Fuller	DC-411	Air Slide	10% opacity	Monthly Method 22 - O&M Plan
	AC-362	Fuller	DC-411	Air Slide	10% opacity	Monthly Method 22 - O&M Plan
	AC-363	Fuller	DC-367	Air Slide	10% opacity	Monthly Method 22 - O&M Plan
	AC-364	Fuller	DC-368	Air Slide	10% opacity	Monthly Method 22 - O&M Plan
	BC-360	Fuller	DC-366	Belt Conveyor	10% opacity	Monthly Method 22 - O&M Plan
	BC-361	Fuller	DC-366	Belt Conveyor	10% opacity	Monthly Method 22 - O&M Plan
	BC-363	Fuller	DC-366	Belt Conveyor	10% opacity	Monthly Method 22 - O&M Plan
	E-360	Fuller	DC-366	Bucket Elevator	10% opacity	Monthly Method 22 - O&M Plan
	B-360	Fuller	DC-366	Raw Mill Seal Bin	10% opacity	Monthly Method 22 - O&M Plan

Process	Emission Source				Emission & Operating Limits	Monitoring Requirements
	Source No.	Dust Collector		Source Name		
	CY-360	Fuller	DC-431	Cyclone	10% opacity	COMS [4]
	CY-361	Fuller	DC-431	Cyclone	10% opacity	COMS [4]
	RM-306	Fuller	DC-431	Raw Mill	10% opacity	COMS [4]
	SE-360	Fuller	DC-431	Separator	10% opacity	COMS [4]
	BC-362	-	-	Spillage Conveyor	10% opacity	Monthly Method 22 - O&M Plan
	PN-402	Fuller	DC-367	FK Pump	10% opacity	Monthly Method 22 - O&M Plan
	PN-403	Fuller	DC-367	FK Pump	10% opacity	Monthly Method 22 - O&M Plan
	SC-430	Fuller	DC-431	Screw Conveyor	10% opacity	COMS [4]
	SC-431	Fuller	DC-431	Screw Conveyor	10% opacity	COMS [4]
	SC-432	Fuller	DC-431	Screw Conveyor	10% opacity	COMS [4]
Pyroprocessing System	PH-404 thru 408 and K-404	Fuller	DC-431	5 Preheaters and Kiln	PM ≤ 0.30 lb/ton-feed 20% opacity D/F ≤ 0.20 ng/dscm Temperature limit [1]	COMS PM CEMS (deferred) Continuous temperature [2] Continuous pressure drop [3]
	CC-404	Fuller	DC-445	Clinker Cooler	PM ≤ 0.10 lb/ton-feed 10% opacity	COMS
	SC-461	Fuller	DC-445	Screw Conveyor	10% opacity	COMS [5]
	SC-462	Fuller	DC-445	Screw Conveyor	10% opacity	COMS [5]
	SC-463	Fuller	DC-445	Screw Conveyor	10% opacity	COMS [5]
	SC-465	Fuller	DC-445	Screw Conveyor	10% opacity	COMS [5]
	SC-466	Fuller	DC-445	Screw Conveyor	10% opacity	COMS [5]
	SC-467	Fuller	DC-445	Screw Conveyor	10% opacity	COMS [5]
Clinker Transport	BC-402	Fuller	DC-448	Belt Conveyor	10% opacity	Monthly Method 22 - O&M Plan
	BC-403	Sly	DC-212	Belt Conveyor	10% opacity	Monthly Method 22 - O&M Plan
	E-404	Fuller	DC-447	Bucket Elevator	10% opacity	Monthly Method 22 - O&M Plan
	B-404	Fuller	DC-447	Clinker Bin	10% opacity	Monthly Method 22 - O&M Plan
	DBC-404	Fuller	DC-446/447	Pan Conveyor	10% opacity	Monthly Method 22 - O&M Plan
	VF-404	Fuller	DC-447	Vibrating Feeder	10% opacity	Monthly Method 22 - O&M Plan
Clinker Storage and Transport	BC-216	Sly	DC-213	Belt Conveyor	10% opacity	Monthly Method 22 - O&M Plan
	BC-217	Sly	DC-214	Belt Conveyor	10% opacity	Monthly Method 22 - O&M Plan
	BC-309	Fuller	DC-316	Belt Conveyor	10% opacity	Monthly Method 22 - O&M Plan

Process	Emission Source				Emission & Operating Limits	Monitoring Requirements
	Source No.	Dust Collector		Source Name		
	HP-301	-	-	Hopper	10% opacity	Monthly Method 22 - O&M Plan
	F-301	-	-	Drag Chain Conveyor	10% opacity	Monthly Method 22 - O&M Plan
	DO-200	Sly	DC-213	Clinker Storage Dome	10% opacity	Monthly Method 22 - O&M Plan
	DO-201	Sly	DC-214	Clinker Storage Dome	10% opacity	Monthly Method 22 - O&M Plan
	BC-310	Fuller	DC-312	Belt Conveyor	10% opacity	Monthly Method 22 - O&M Plan
Mill Feed / Clinker & Gypsum Handling	B-300	-	-	Gypsum Bin	10% opacity	Monthly Method 22 - O&M Plan
	B-303	Norblo	DC-306	Clinker Bin	10% opacity	Monthly Method 22 - O&M Plan
	B-340	Mikro Pul	DC-342	Clinker Bin	10% opacity	Monthly Method 22 - O&M Plan
	B-341	Mikro Pul	DC-342	Gypsum Bin	10% opacity	Monthly Method 22 - O&M Plan
	BC-303A	Norblo	DC-304	Belt Conveyor	10% opacity	Monthly Method 22 - O&M Plan
	SC-312	Norblo	DC-306	Screw Conveyor	10% opacity	Monthly Method 22 - O&M Plan
	W-345	-	-	Weighfeeder	10% opacity	Monthly Method 22 - O&M Plan
	BC-312	Norblo/Fuller	DC-305/312	Belt Conveyor	10% opacity	Monthly Method 22 - O&M Plan
	BC-313	Norblo	DC-306	Belt Conveyor	10% opacity	Monthly Method 22 - O&M Plan
	BC-350	Fuller	DC-352	Belt Conveyor	10% opacity	Monthly Method 22 - O&M Plan
	B-350	Fuller	DC-312	Clinker Bin	10% opacity	Monthly Method 22 - O&M Plan
	B-351	Fuller	DC-312	Gypsum Bin	10% opacity	Monthly Method 22 - O&M Plan
	SC-350	Fuller	DC-352	Scavenger Conveyor	10% opacity	Monthly Method 22 - O&M Plan
	SC-351	Fuller	DC-352	Scavenger Conveyor	10% opacity	Monthly Method 22 - O&M Plan
	W-350	Fuller	DC-352	Weighfeeder	10% opacity	Monthly Method 22 - O&M Plan
	W-351	Fuller	DC-352	Weighfeeder	10% opacity	Monthly Method 22 - O&M Plan
Finish Mill No. BM 303	AC-307	Norblo	DC-303	Air Slide	10% opacity	Daily Method 22
	AC-308	Norblo	DC-303	Air Slide	10% opacity	Daily Method 22
	AC-309	Norblo	DC-303	Air Slide	10% opacity	Daily Method 22
	AC-312	Norblo	DC-303	Air Slide	10% opacity	Daily Method 22
	AC-315	Norblo	DC-303	Air Slide	10% opacity	Daily Method 22
	AC-318	Norblo	DC-303	Air Slide	10% opacity	Daily Method 22
	AC-323	Norblo	DC-303	Air Slide	10% opacity	Daily Method 22
	AC-324	Norblo	DC-303	Air Slide	10% opacity	Daily Method 22
	AC-330	Norblo	DC-303	Air Slide	10% opacity	Daily Method 22

Process	Emission Source				Emission & Operating Limits	Monitoring Requirements
	Source No.	Dust Collector		Source Name		
	AC-331	Norblo	DC-303	Air Slide	10% opacity	Daily Method 22
	BC-305	Norblo	DC-306	Belt Conveyor	10% opacity	Monthly Method 22 - O&M Plan
	BM-303	Norblo	DC-303	Ball Mill	10% opacity	Daily Method 22
	CY-303	Norblo	DC-303	Cyclone	10% opacity	Daily Method 22
	E-303	Norblo	DC-306	Bucket Elevator	10% opacity	Monthly Method 22 - O&M Plan
	SC-305	Norblo	DC-303	Screw Conveyor	10% opacity	Daily Method 22
	SC-309	Norblo	DC-303	Screw Conveyor	10% opacity	Daily Method 22
	SC-306	Norblo	DC-303	Screw Conveyor	10% opacity	Daily Method 22
	SE-305	Norblo	DC-303	Separator	10% opacity	Daily Method 22
	SE-306	Norblo	DC-303	Separator	10% opacity	Daily Method 22
	PN-302	Norblo	DC-306	Pneumatic Pump	10% opacity	Monthly Method 22 - O&M Plan
	W-305	-	-	Weighfeeder	10% opacity	Monthly Method 22 - O&M Plan
Finish Mill No. BM 304	AC-340	Mikro Pul	DC-341	Air Slide	10% opacity	Daily Method 22
	AC-341	Mikro Pul	DC-340	Air Slide	10% opacity	Monthly Method 22 - O&M Plan
	AC-342	Mikro Pul	DC-343	Air Slide	10% opacity	Monthly Method 22 - O&M Plan
	AC-343	Mikro Pul	DC-343	Air Slide	10% opacity	Monthly Method 22 - O&M Plan
	AC-344	Mikro Pul	DC-343	Air Slide	10% opacity	Monthly Method 22 - O&M Plan
	AC-346	Mikro Pul	DC-343	Air Slide	10% opacity	Monthly Method 22 - O&M Plan
	AC-347	Mikro Pul	DC-343	Air Slide	10% opacity	Monthly Method 22 - O&M Plan
	B-342	Flex-Kleen	DC-309	Fly Ash Bin	10% opacity	Monthly Method 22 - O&M Plan
	B-343	Ultra Industries	DC-308	Hydrated Lime Bin	10% opacity	Monthly Method 22 - O&M Plan
	BC-341	Wolverine	DC-344	Belt Conveyor	10% opacity	Monthly Method 22 - O&M Plan
	BC-342	Wolverine	DC-344	Belt Conveyor	10% opacity	Monthly Method 22 - O&M Plan
	BC-343	Mikro Pul	DC-343	Belt Conveyor	10% opacity	Monthly Method 22 - O&M Plan
	BM-304	Mikro Pul	DC-341	Ball Mill	10% opacity	Daily Method 22
	E-340	Mikro Pul	DC-341	Bucket Elevator	10% opacity	Daily Method 22
	PN-340	Mikro Pul	DC-343	FK Pump	10% opacity	Monthly Method 22 - O&M Plan
	SC-320	Norblo	DC-306	Screw Conveyor	10% opacity	Monthly Method 22 - O&M Plan
	SC-317	Norblo	DC-306	Screw Conveyor	10% opacity	Monthly Method 22 - O&M Plan
	SC-316	Norblo	DC-306	Screw Conveyor	10% opacity	Monthly Method 22 - O&M Plan

Process	Emission Source				Emission & Operating Limits	Monitoring Requirements
	Source No.	Dust Collector		Source Name		
	S-8	Fuller	DC-510	Cement Silo 8	10% opacity	Monthly Method 22 - O&M Plan
	S-9	Fuller	DC-510	Cement Silo 9	10% opacity	Monthly Method 22 - O&M Plan
	S-10	Fuller	DC-510	Cement Silo 10	10% opacity	Monthly Method 22 - O&M Plan
	S-13	Fuller	DC-510	Cement Silo 13	10% opacity	Monthly Method 22 - O&M Plan
	S-14	Fuller	DC-510	Cement Silo 14	10% opacity	Monthly Method 22 - O&M Plan

[1] When the raw mill is operating, temperature of the main in-line kiln/raw mill exhaust gases must not exceed the applicable temperature limit established in the most recent performance test when the raw mill was operating.
When the raw mill is not operating, temperature of the main in-line kiln/raw mill exhaust gases must not exceed the applicable temperature limit established in the most recent performance test when the raw mill was not operating.

[2] A continuous monitor is required to record the temperature of the exhaust gases from the main in-line kiln/raw mill at the inlet of the PM control device.

[3] Until a PM CEMS is installed and operated, pressure drop across the PM control device will be continuously monitored to demonstrate operation within the designated indicator range. After the PM CEMS is installed, the pressure drop monitor will no longer be required.

[4] COMS is required for Kiln (K-404) / dust collector (DC-431). DC-431 also controls this equipment/process.

[5] COMS is required for Clinker Cooler (CC-404) / dust collector (DC-445). DC-445 also controls this equipment/process.

3.0 OPERATION AND MAINTENANCE PROCEDURES

3.1 KILN AND CLINKER COOLER

Operators of the in-line kiln and raw mill, and the clinker cooler shall operate these affected sources according to the Installation, Operation and Maintenance Procedures specified by F.L. Smidth Inc (FLS) to optimize combustion conditions. Particulate (PM) and visible emissions from the kiln/raw mill are controlled by a Fuller 259,200 acfm fabric filter baghouse (DC-431); and clinker cooler emissions are controlled by a Fuller, 138,000 acfm fabric filter baghouse (DC-445). Both baghouse exhaust streams are monitored by Rosemount Analytical transmissometers. In addition, both baghouses are continuously monitored to demonstrate pressure drop indicator ranges are not exceeded.

3.2 COMS

"COMS Procedures" are provided in Part B, Section 1.0 of this O&M Plan, for operation and maintenance procedures, and specifications for the COMS that monitor opacity from DC-431 and DC-445. The Rosemount Analytical manual specifies complete installation, alignment, operation, troubleshooting, and preventative maintenance procedures to be followed by PCC operators and technicians.

3.3 DUST COLLECTORS

Part B, Section 2.0, of this O&M Plan provides a detailed summary of the operation and maintenance requirements for all dust collectors controlling PM emissions from affected sources (identified in Table 2-1) under 40 CFR 63, Subpart LLL.

4.0 CORRECTIVE ACTIONS

Part B, Section 3.0 of this O&M Plan provides a detailed summary of the corrective actions required (when visible emissions are observed) for dust collectors controlling PM emissions from affected sources (identified in Table 2-1) under 40 CFR 63, Subpart LLL.

This O&M Plan is required to include corrective actions to be taken when required by paragraph (e) of Section 63.1350 of Subpart LLL. Paragraph (e) of that section requires daily, six-minute visual emissions observations of mill sweep and air separator PM control devices for affected raw mills and finish mills. The visual emissions observations must be conducted in accordance with the procedures of EPA Method 22 and conducted while the affected raw mill or finish mill is operating at the highest load or capacity level reasonably expected to occur within the day. If visible emissions are observed, specific actions must be taken, as summarized below:

- Initiate, within one hour, the corrective actions specified in the O&M Plan (Part B, Section 3.0); and

- Within 24 hours of the end of the Method 22 test in which visible emissions were observed, conduct a visual opacity test of each stack from which visible emissions were observed in accordance with EPA Method 9. The duration of the Method 9 test shall be 30 minutes.

5.0 PROCEDURES FOR COMBUSTION SYSTEM INSPECTIONS

The components of the combustion system of the in-line kiln/raw mill shall be inspected at least once per year. Part B, Section 4.0 of this O&M Plan provides comprehensive inspection procedures.

6.0 OPACITY MONITORING PROCEDURES

As shown in Table 2-1, opacity standards apply to all Subpart LLL affected sources and periodic monitoring requirements are listed for each source. The following paragraphs specify monitoring procedures to be followed for each type of monitoring listed in Table 2-1.

1. Monthly Method 22 (O&M Plan) – At each affected source for which Table 2-1 specifies "Monthly Method 22 (O&M Plan)", conduct a one-minute visible emissions test in accordance with the EPA Method 22 procedures provided in Part B, Section 5.0. *Initially*, the one-minute Method 22 test must be conducted on a monthly basis.

If no visible emissions are observed in six consecutive monthly tests of any affected source, the frequency of testing may be decreased from monthly to semi-annually for that affected source. If visible emissions are observed during any semi-annual test, a monthly testing frequency must be resumed for that source, and the monthly schedule must be maintained until no visible emissions are observed in six consecutive monthly tests.

If no visible emissions are observed during the semi-annual test of any affected source, the frequency of testing may be decreased from semi-annually to annually for that affected source. If visible emissions are observed during any annual test, a monthly testing frequency must be resumed for that source and the monthly schedule must be maintained until no visible emissions are observed in six consecutive monthly tests.

If visible emissions are observed during any Method 22 test, a six-minute test of opacity must be conducted in accordance with EPA Method 9 (Part B, Section 5.0). The Method 9 test must begin within one hour of any observation of visible emissions.

2. Daily Method 22 – At each affected source for which Table 2-1 specifies "Daily Method 22", conduct a six-minute Method 22 visible emissions test while the mill is operating at the highest expected capacity. Conduct each test on a daily basis. If visible emissions are observed, corrective action must be initiated within one hour (Part B, Section 3.0). Conduct a 30-minute Method 9 test within 24 hours of the observation of visible emissions.

3. COMS shall be operated, calibrated and maintained according to the recommendations of the manufacturer (Part B, Section 1.0).

PART B

SPECIFIC PROCEDURES AND TECHNICAL DOCUMENTS

SECTION 1.0

CONTINUOUS OPACITY MONITORING SYSTEMS INSTALLATION, OPERATION AND MAINTENANCE PROCEDURES

DURAG

D-R 290

Dust and Opacity Monitor Installation and Operation

DURAG Durag, Inc
1355 Mendota Heights Road Ste. 200 · Mendota Heights, MN 55120
Tel. 651-451-1710 · Fax 651-457-7684

Contents

Figures 3
1. Applications 4
2. Basic Features 4
3. Operating Overview 5
3.1. Opacity Calculation at the Stack exit 7
3.2. Extinction Measurement Principle 8
3.4.1 Measurement 12
3.4.2 Internal Reference 12
3.4.3 Internal Zero Check 13
3.4.4 Upscale Calibration Check 13
3.5 System Components 14
3.5.1 Configuration options for stack and control room displays 16
4. Selection of the Measuring Location 17
5. Installation 17
5.1 Flange Installation 17
5.2 Blower Panel and Weather Hood Installation 18
5.2.1 Weather Hood and Blower Panel Electrical Installation 20
5.3 D-R 290 AZG Stack-Mounted Display Module 21
5.3.1 Electrical Installation, D-R 290 AZG Stack-Mounted Display Module 22
5.4 Transceiver and Reflector Installation 23
5.4.1 Transceiver and reflector alignment and focus 24
5.4.2 Transceiver and reflector electrical installation 26
5.5 D-R 290 AW Evaluation Unit Installation 26
5.5.1 D-R 290 AW Electrical Connection when used with D-R 290 AZ 28
5.5.2 D-R 290 AW Stand Alone Electrical Connection (No D-R 290 AZ) 30
6. Operation 31
6.1 Operation of the D-R 290 AW evaluation unit 31
6.1.1 Parameters 31
6.1.2 Key functions 35
6.1.3 Saving / Data entry 35
6.1.3 Liquid Crystal Display (LCD) 37
6.1.4 Switch settings and Operation with or without the D-R 290 AZ 38
6.2 Operation of the D-R 290 AZ Stack Display Unit 38
6.3 Reflector Operation 39
6.4 Transceiver Operation 39
6.4.1 Maintenance 39
6.4.2 Transceiver circuit board 40
6.4.2.1 Transceiver Switch Functions 39
6.4.3 Clear Path Procedure 43
6.4.4 Manual internal zero point (Window Check) 45
6.4.5 External Zero Point Calibration 45
7. Error Messages 46
8. Purge air system 47
9. D-SK 290 Fail-safe Shutters 47
9.1. Function 48
9.2. Installation 49

9.3. Electrical Connection D-SK AE 51
9.3.1 Automatic check of shutter operation 52
9.4 Shutter Operation 53
10. Technical Specifications 54
10.1 Technical Specifications: D-R 290 54
10.2 Technical Specifications for the Purge Air Blower 54
10.3 Technical Specifications for the D-SK AE Electronics 55
10.4 Technical Specifications for the D-SK 290 MA Mechanics 55

Figures

(Fig. 3.1) Relationship between Extinction, Transmission and Opacity 6
(Fig. 3.2) Reference locations for determining opacity 7
(Fig. 3.3) Optics diagram D-R 290 11
(Fig.3. 4) System components 14
(Fig. 5.1) D-R 280-10E installation flange for D-R 290 Opacity Monitor 17
(Fig. 5.2) Weather hood dimensions 18
(Fig. 5.3) Transceiver side interconnect wiring, typical 20
(Fig. 5.4) Reflector side interconnect wiring, typical 21
(Fig. 5.5) D-R 290 AG wall mount housing dimensions 21
(Table 5.6) D-R 290 AZ stack display I/O 23
(Fig. 5.7) Mounting monitor on the installation flange 24
(Fig. 5.8) D-R 290 BT dimensional diagram 27
(Fig. 5.9) D-R 290 AW19 dimensional diagram 27
(Fig. 5.10) D-R 290 BT terminal connectors 28
(Table 5.11) D-R 290 AW mounted in D-R 290 BT housing, terminal connections 29
(Table 5.12) D-R 290 AW mounted in D-R 290 AG housing, terminal connections (No D-R 290 AZ) 30
(Table 6.1) How set-up mode changes I/O 32
(Fig. 6.2) D-R 290 AW Key Functions 35
(Fig. 6.3) D-R 290 AW operating sequence 36
(Table 6.4) D-R 290 AW and AZ processor board switch functions 38
(Fig. 6.5) Transceiver switch functions 40
(Table 7.1) Error messages 46
(Fig.9.1) Dimensions (in mm) of shutter (D-SK 280 MA) 48
(Fig. 9.2) Dimensions (in mm) of control electronics D-SK AE 49
(Fig. 9.3) Air Flow Sensor 50
(Fig. 9.4) D-SK 290 Mounting 50
(Fig. 9.5) Electrical Connection for the D-SK AE 51
(Fig. 9.6) Electrical connection between the D-R 290 AZ and the fail-safe shutter 52

Valid for PROM version 2.00 and higher

Document : man_dr290_R1

Date : *September 2001*

1. Applications

The Durag D-R 290 opacity monitor can be used for continuous emissions monitoring in smokestacks, exhaust ducts, and other similar applications. This monitor has been designed to comply with the new Performance Specification 1 found in 40 CFR part 60, Appendix B and the ASTM D6216-98 standard.

This type of opacity monitor is necessary for the legal and economically sound operation of power plants, heating plants and other industrial large boiler facilities. These systems are also critical for use in the chemical and cement industries where careful monitoring of the industrial processes is a criterion for problem-free operation.

Durag opacity monitors have functioned successfully for years in applications where dust emissions could have potentially damaging environmental pollution effects. The data they collect is incorruptible, precisely reproducible, unaffected by seasonal changes or weather conditions, and functions easily in either automatic or manual operation. These systems have been used for applications in refineries and other facilities of the petrochemical industry, in waste-burning facilities and many others.

2. Basic Features

- Continuous, *in situ* measurement directly in the exhaust stream without disruption or dust sampling.
- The white light semi-conductor light source has a long life.
- The wide spectrum of the Super-Wide Band Diode (SWBD) optimizes system accuracy because the measurements are more stable than those made with conventional LEDs.
- Modern microprocessor technology and software allow digital information processing.
- LCD shows measurements as opacity or extinction.
- Automatic calibration cycle corrects values for window contamination.
- Purge air system protects the reflector and heated exit window reduce maintenance.
- Control panel with digital display makes installation and operation simple.
- Hermetically sealed optics and electronics prevent dust or smoke from damaging internal system components. Two analog outputs with selectable measuring ranges on each system.

Optional

- Fail-safe shutter system protects the transceiver and reflector.
- Protective weather hoods for transceivers, reflectors, and purge air systems.
- Stack mounted display for single person filter audits.

3. Operating Overview

The transceiver emits a beam of light which passes through the stack or duct and strikes a reflector. The light beam is reflected back and the amount of light returned is measured by the transceiver. Dust particles in the stack will absorb and scatter the transmitted beam of light so the returned light will be less than the transmitted light. The ratio of the returned light to the transmitted light is call the transmission. One minus the transmission is referred to as opacity. For dust concentration measurements optical density (also called extinction) is historically used because the dust concentration is linear to the optical density value. The log of 1 divided by the transmission give the optical density.

The measured transmission value is sent via RS 422 to the stack display (D-R 290 AZ). From this local display the measured value can be read and maintenance actions can be initiated. Also purge air alarms are wired into this stack display. From here the measured value and any purge air failure is sent via RS422 to the evaluation unit (D-R 290 AW).

At the evaluation unit the measured value is displayed and system parameters can be viewed or changed. This remote display also contains the status inputs, relay outputs and the 2 independent current outputs. One current output could be set to read opacity and the other to read the dust concentration. If dust concentration is required, normally a stack test is need to calibrate the extinction reading to a concentration (determine the extinction coefficient).

Purge air blowers are used to keep the optics clean. Weather hoods are used to protect the blowers and the opacity system. Fail safe shutters can be installed to protect the optics if a purge air blower should fail or loose power and may also protect service personnel on over pressure stacks. These shutters are exercised during the daily calibration to insure they are in working order when needed and to prevent them from sticking in the open position.

The Durag D-R 290 opacity monitor is designed to utilize the principles of light transmission. The transceiver and reflector are mounted opposite one another. Using the auto collimation principle, the light beam traverses the distance to be measured twice. This significantly increases the sensitivity of the measurements made by the system.

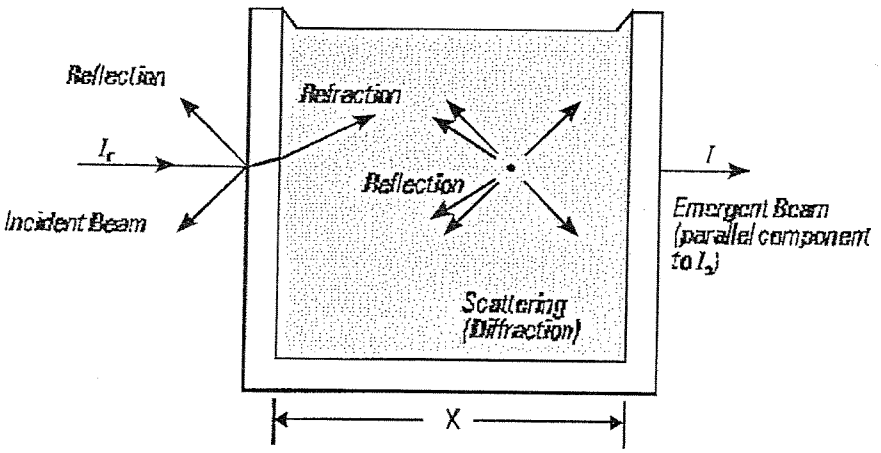

The light beam loses intensity proportionally to the particle concentration of the air. The light beam has a significantly larger diameter than the reflector surface. This makes alignment easier and reduces measurement errors caused by possible heat-induced shifts in the transceiver or reflector mounting flanges.

3.1. Transmission Measuring Principle

If a light shines through a smoke stack or dust exhaust duct, this light beam will become weaker as the dust density increases.

Transmission is the ratio of the intensity of the light received *(I)* compared to the intensity of the light transmitted (I_0).

$$\frac{I}{I_0} \qquad \text{Eq.1}$$

The relationship between the irradiated light and the received light is given as a percent value, as shown in equation 2.

$$\frac{I}{I_0} \times 100\% = T \qquad \text{Eq.2}$$

Subtracting the transmission measurement from one gives the opacity value. Opacity is the default measurement mode of the D-R 290, since this results in an increasingly strong signal at the detector as the dust density diminishes.

$$100\% - \frac{I}{I_0} \times 100\% = OP \qquad \text{Eq.3}$$

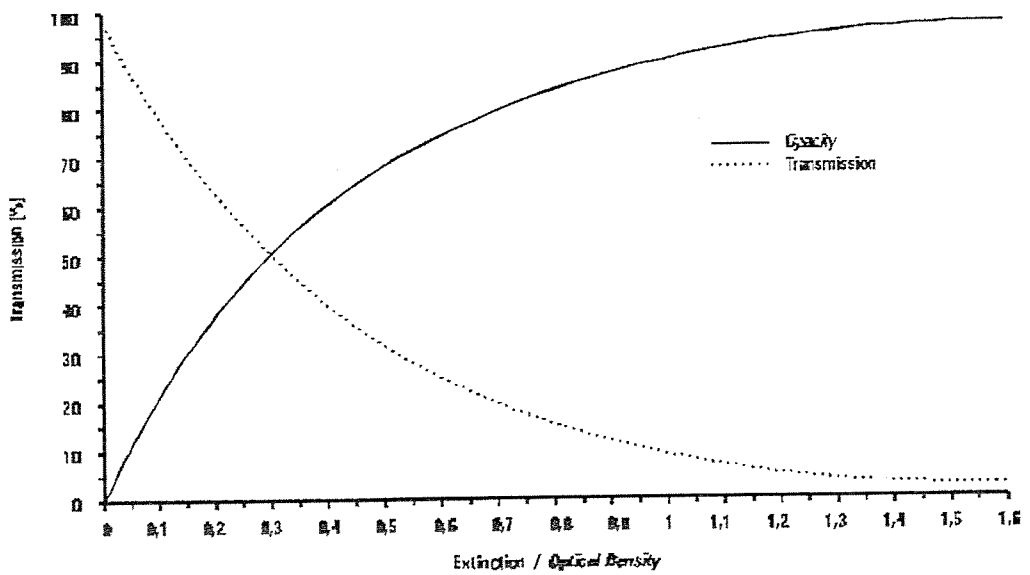

(Fig. 3.1) Relationship between Extinction, Transmission and Opacity

Because the D-R 290 operates on the auto collimation principle, the light beam being measured crosses the measurement region twice. This means that the measurement light beam will lose the same percentage of intensity on each pass through the dust particles in the exhaust air.

Since an observer looking at the stack exit is only looking through the plume once, the D-R 290 will correct the double pass measurement and the opacity reading as a single pass measurement at the stack outlet.

3.1. Opacity Calculation at the Stack exit

Op = Single pass opacity at the measurement point.

Op1 = Double pass opacity at the measurement point measured using the auto collimation principle.

Op2 = Single pass opacity at the stack exit.

L1 = Diameter of the stack at the measurement point.

L2 = Diameter of the stack at the stack exit.

Eq.4

If both losses of light intensity from the measurement beam passes are taken into account, the following equation (Eq. 5) can be used to calculate the opacity at the stack exit:

$$Op2 = 1 - (1 - Op1)^{\frac{L2}{2\,L1}}$$

Eq.5

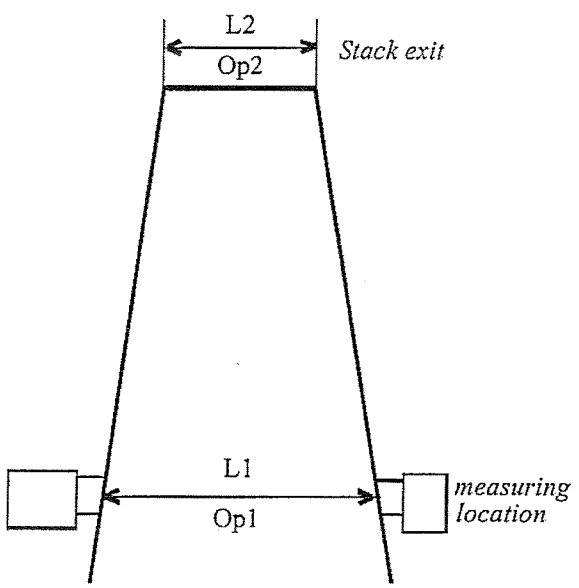

(Fig. 3.2) Reference locations for determining opacity

Since the data must be evaluated as if the measured light beam has crossed the stack opening a single time, the D-R 290 system can make these corrections. This means that the stack correction factor L2/L1 must be entered into the control unit. This value can be set as shown in section 6.5. Once set, the stack correction factor is used in all opacity measurement ranges on both measurement channels.

For example:

Measurement location	= 6.00 ft	= L 1	
Stack exit	= 5.10 ft	= L 2	
Stack correction factor		$= \frac{5.10\,ft}{6.00\,ft}$	= 0.850

The stack correction factor is set by DURAG using information supplied by the customer based upon the specific stack dimensions. If this needs to be changed, please contact DURAG for assistance.

3.2. Extinction Measurement Principle

If a beam of light shines through a flue gas channel or dust extraction line, the light intensity will attenuate as the dust concentration ***C*** increases. This loss of light intensity is caused by absorption and diffraction, collectively referred to as extinction. Generally, the light intensity ***I*** decreases exponentially as the path length ***L*** increases.

$$I = I_o \cdot e^{-KLC} \qquad \text{Eq.6}$$

In calculating the measured dust intensity, I_o is the constant for the emitted light intensity and ***L*** is the constant value of the measured path length. The value of the extinction constant ***K*** can then be determined. In general, the dust concentration (in grain/ft^3 or mg/m^3) has a linear relationship to extinction. Many parameters, however, will vary at different installations including particulate size, composition of the particles, specific weight, index values, and the absorption constant for the light being used. In many installations, the load of the facility will affect the size of the dust particles. Wet (whether steam of condensation-based) and dry filtering systems will also influence the particulate exhaust. Thus, the exact relationship between the extinction value the monitor displays and the actual dust emissions should be determined through gravimetric measurement.

$$E = lg(\tfrac{1}{T}) = lg(\tfrac{I_o}{I}) \qquad \text{Eq.7}$$

Solving equation 6 allows the derivation of the extinction constant ***K*** as shown below:

$$K = \frac{\ln\left(I_o / I\right)}{C \cdot L} \qquad \text{Eq.8}$$

To express the extinction constant *K* in a linear relationship to the dust concentration *C*, the values of the measurement and comparison light beams are written as a part of log functions.

The dust concentration *C* is:

$$C = \frac{\ln\left(I_o / I\right)}{K \cdot L} \qquad \text{Eq.9}$$

Io = Emitted light

I = Received light

L = Measuring path length (for Auto collimation * 2)

K = Extinction coefficient

E = Extinction

c = Dust concentration

For the reasons above, dust concentration **c** must be determined by gravimetric measurement. The necessary measurement must be carried out at the expected plant loads and the expected filter settings of the respective plant. When changing fuel types, checking the measurements is necessary. Only when these comparison values are available can the extinction values in respect to the particulate emissions be correctly evaluated. As dust concentration readings are subject to fluctuations, most favorable are statistical methods for determining the calibration curve for the relationship between extinction and dust concentration.

See DIN 1319 p. 3 'Fundamentals of Measuring Techniques' and DIN 55302 p.1 and 2 'Statistic evaluation procedures, frequency distribution, mean value and scattering', as well as VDI 2066 'Dust measuring in streaming gases'.

The compensating straight-line, which is drawn through the measuring points, is established to the 'smallest quadratic error' method. It is also designated as regression straight-line (Ý). The (*Y*1, *Y*2) lines represent the reliability range, i.e., the mean value of extinction *x* obtained over a long period lies with a probability of 95% between *Y*1 and *Y*2. Two further lines (*Y*3, *Y*4) define the tolerance range. This means that as a result of many gravimetric dust measurements at the indicated extinction value *x*, at least 75% of the spot-checked dust contents will lie with 95% probability in the tolerance range between *Y*3 and *Y*4.

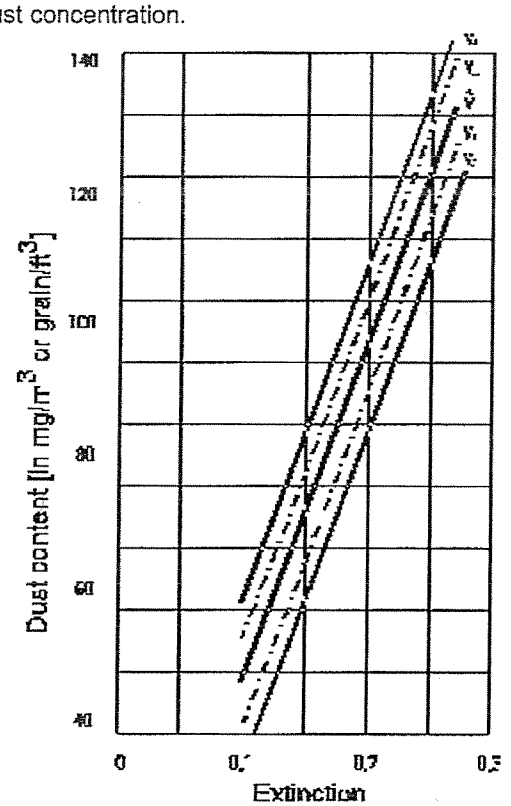

3.4 Principle of Operation

The D-R 290 operates according to the principle of autocollimation (double-pass). The lightbeam crosses the measuring path twice. The system measures and evaluates the attenuation of the light beam caused by the dust in the measuring path.

The two main features that separate the D-R 290 from the older designs of the competition are the Super Wide Band Diode and the single detector optical design.

The Super Wide Band Diode with a spectral response of 400 to 700 nm is modulated with no moving parts. This modulation prevents influences from other light sources such as sunlight. The broad band light source minimizes the effects of changing particle sizes when measuring dust concentration. The calibration audit filters typically used are measured over the 400 to 700nm range. The broad spectrum light source will give a more accurate measurement of these filters when compared to a narrow band LED system. Optical techniques are employed to ensure a homogeneous light beam without "hotspots". This light is then split by a beam splitter to form a measurement light beam and a comparison light beam. The measurement light beam passes through the dust in the stack, enters the optic head, passes through the beam splitter and is measured by the detector.

Since the basis for all opacity monitors is the measurement of transmission (the amount of light received divided by the amount of the light transmitted), it is very important that not only the received light be measured accurately, but the transmitted light as well. Every 2 minutes the measurement light path is briefly blocked and only the comparison light path is evaluated. The comparison light beam is measured to determine the amount of the transmitted light. This comparison light path uses the same light source as the measured light path, passes through the beam splitter once, and is reflected once – just like the measured signal – and is measured by the same detector used to measure the light beam from the measuring reflector. Using this optical design, any change in the amount of light from the source, contamination of the beam splitter, or drift in the detector will effect both light paths (comparison and measurement) by the same amount and no error will be introduced to the opacity measurement.

A control cycle is initiated periodically to ensure proper operation of the system. During this cycle, the D-R 290 automatically measures and displays the zero point, window contamination, upscale calibration value, and stack taper ratio. If necessary, the subsequent measured values will be corrected for window contamination. If the correction exceeds a predetermined value, a warning signal will be generated.

An integrated filter holder in the transceiver and a local display allow for quick and easy quarterly audits. The local display also allows service or maintenance by a single technician. Diagrams of the optics are given on the following pages.

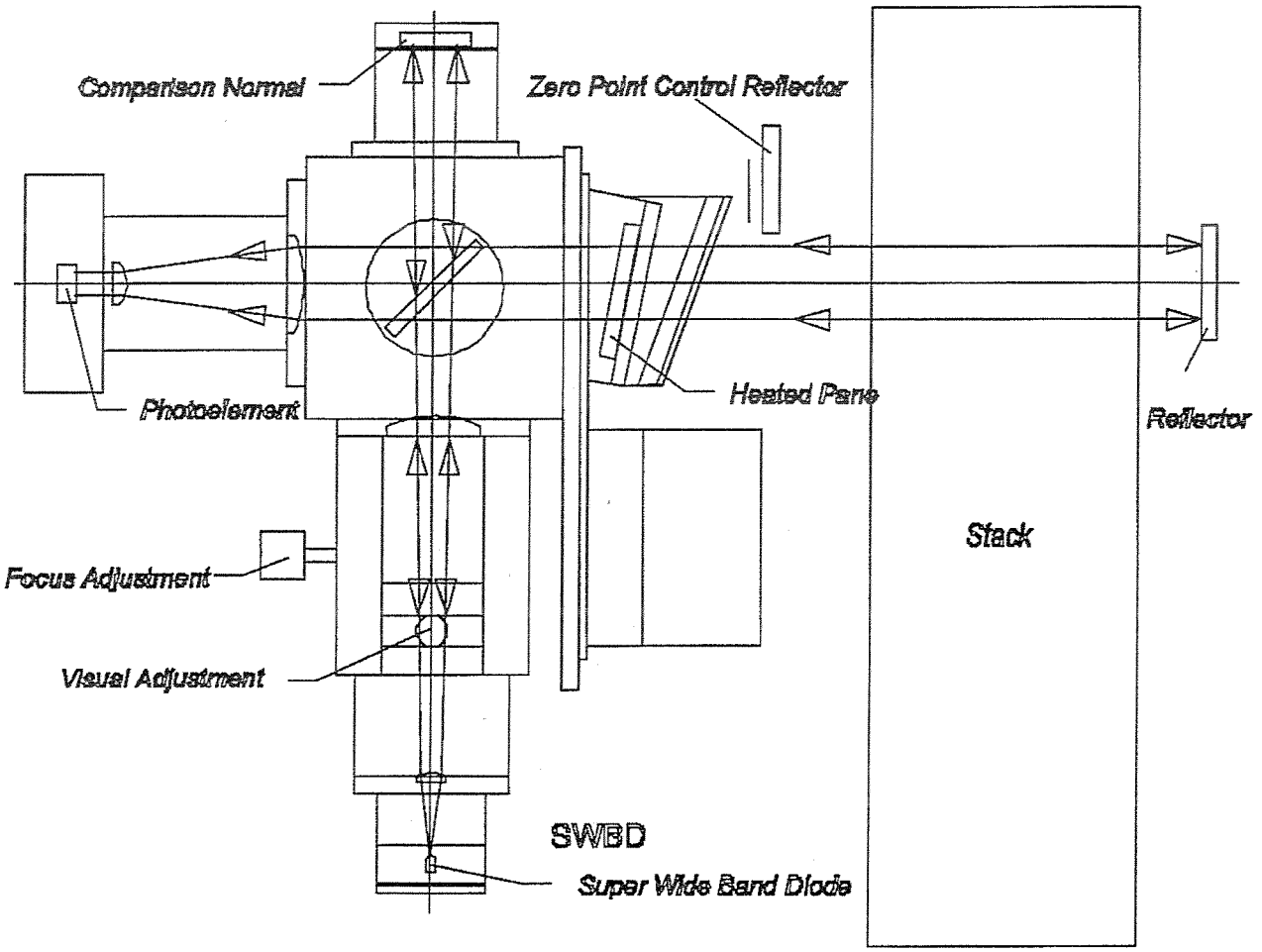

(Fig. 3.3) Optics diagram D-R 290

3.4.1 Measurement

Measuring

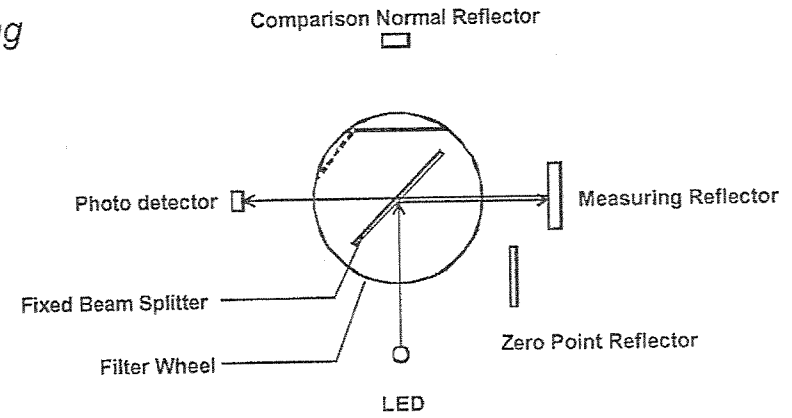

The unavoidable drifts in light intensity that result from aging of the light source or temperature changes are automatically compensated by the monitor. The 2 kHz modulated light is split into both a measurement light beam and a comparison normal. An optical receiver (photoelement) alternately reads these light beams. The selection of the light paths is driven by a stepper motor.

3.4.2 Internal Reference

Internal reference measurement

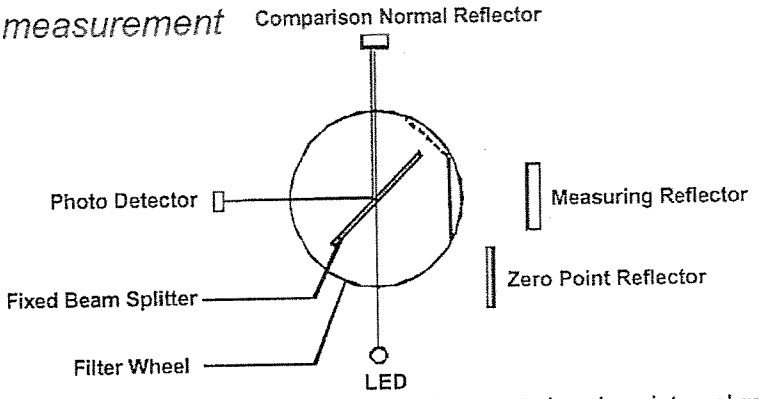

Every 2 minutes, for a period of 2 seconds, the opacity measurement is interrupted and an internal reference measurement (also called comparison normal) is performed. The filter wheel driven by a stepper motor moves the opaque filter from in front of the comparison normal reflector to a position in front of the measuring reflector. The light beam of interest leaves the LED and passes through the beam splitter. The light that was reflected from the beam splitter hits the opaque filter and is wasted. The light beam that passed through the beam splitter travels to the comparison normal reflector and is reflected. It travels to the beam splitter where the beam is reflected to the photo-detector. This value is digitized and stored in memory. This is how the system monitors the intensity of the LED. If the LED intensity is higher or lower than expected, the system can lower or raise the LED current by one step each 2 minute reference measurement cycle. In this way the light intensity of the system is held constant.

3.4.3 Internal Zero Check

Zero point check

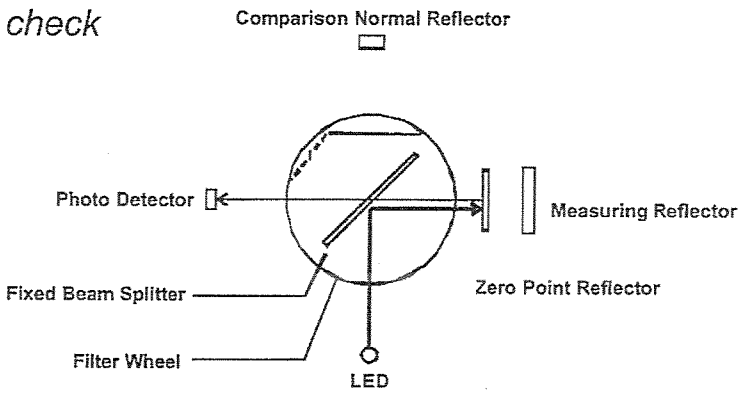

To make sure the D-R 290 system is operating properly, a control cycle runs at regular intervals, which can be set to occur every 1-99 hours or can be initiated by the data logger. This cycle automatically measures and displays the zero point value, the level of window contamination on the optical surfaces, and a control value. All subsequent measurements are then adjusted to correct for the window contamination values. The acceptable value for this window contamination can be selected in %; if the value becomes higher, a warning message will be displayed (relay output). The control panel electronics then calculate the transmission intensity based on the light it receives and the intensity of the comparison normal beam. This data is then used in the calculation of the opacity or the extinction value. The extinction can be calibrated and is displayed in mg/m³ (grain/ft³). The result is then both displayed and given as an analog current output signal.

3.4.4 Upscale Calibration Check

Upscale calibration check

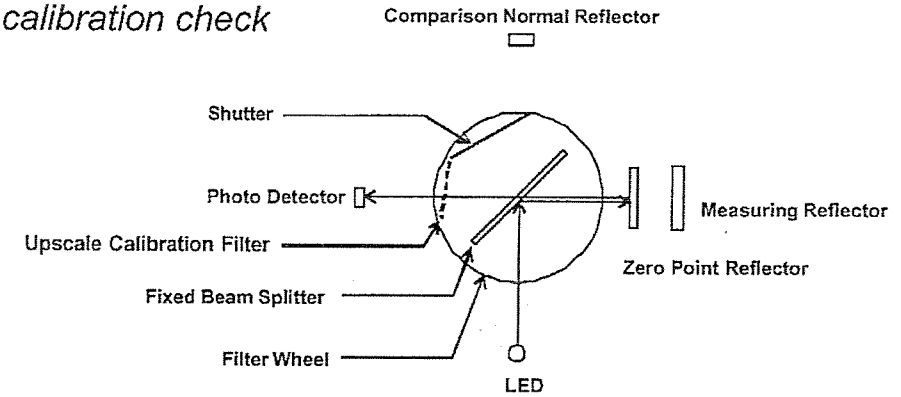

3.5 System Components

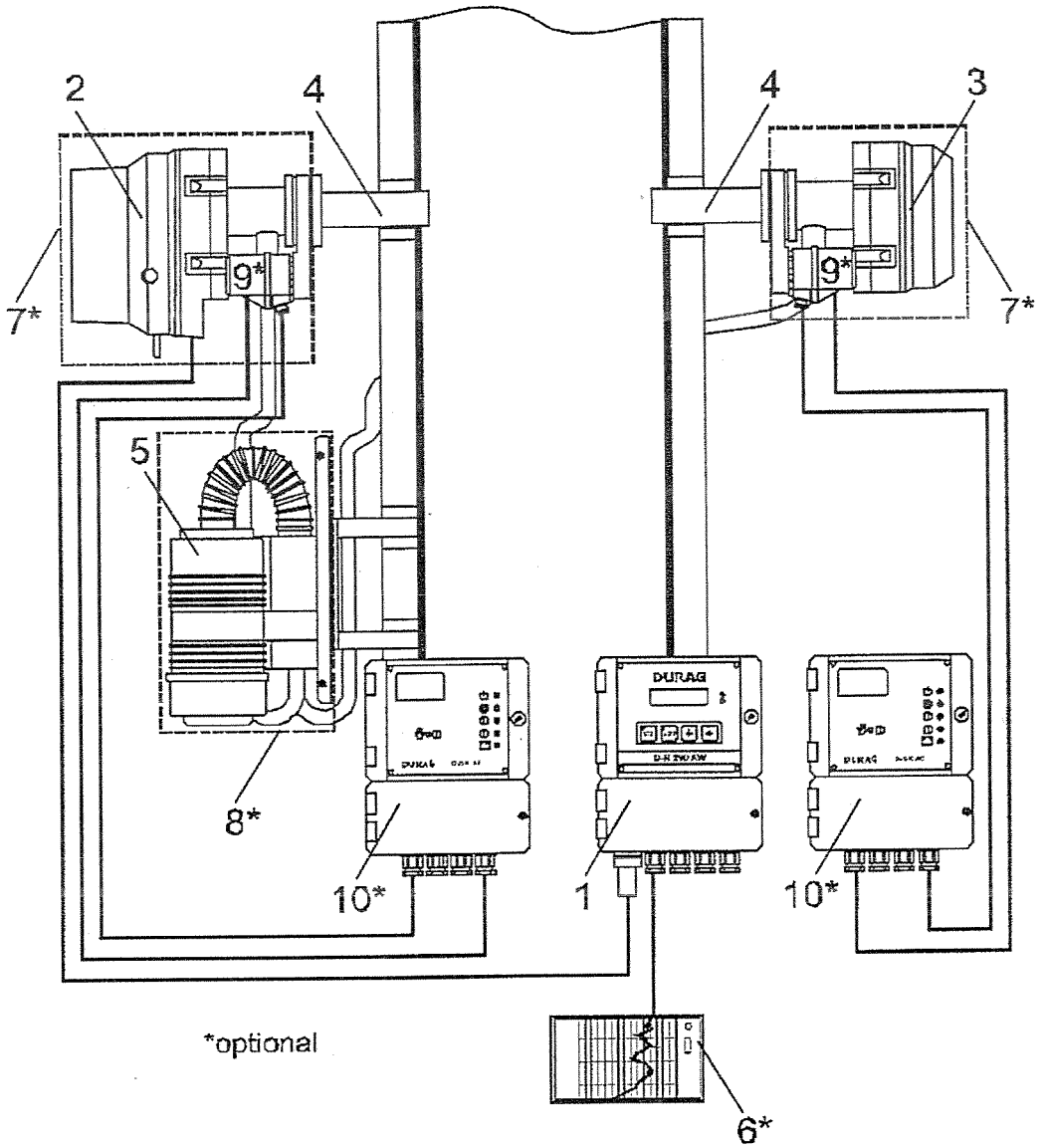

(Fig.3. 4) System components

	Standard		* Optional
1	Control unit, D-R 290 AZ (stack display) Or D-R 290 AW (evaluation unit)	6	Customer supplied recorder or data logging system
2	Transceiver, D-R 290 MK	7 & 8	Weather Hood, US built systems use one Large weather hood for blower and optics
3	Reflector, D-R 290 R1 or R2		
4	Mounting flange, D-R 280 E	9	Fail-safe shutters
5	Purge air unit	10	Fail-safe shutter control electronics

Figure 4 shows standard and optional system components. Due to the many types of different applications, it is difficult to show all the different configurations of various components. DURAG, Inc. is committed to supplying the right system for the customer's particular application. There have been applications where weather hoods are not required, where only one shutter is used on the transceiver, or where one larger blower is used due to space constraints, 2 larger blowers have been used to overcome stack pressure, various adapter flanges have been used to mate with existing stack flanges, etc. Please consult with DURAG, Inc. for specific application recommendations.

The system components are briefly described below. A more detailed description is given in the installation section of this manual.

1. **Stack Display Unit D-R 290 AZ**: This consists of an electronic insert (D-R 290 AZ) that is mounted in a housing with a terminal strip (D-R 290 AG). The insert in the housing will be called the D-R 290 AZG. This serves as the power supply for the transceiver, display unit of the measured values and system parameters, I/O termination point for shutters and pressure cells for blower alarms. This unit also relays the RS 422 information between the transceiver and the control room display unit. Calibration functions and the quarterly audit filters tests can be initiated from the D-R 290 AZG. This is part of the standard system although not required. It is possible to operate the system without the D-R 290 AZG and only with the Control Room Display Unit D-R 290AW.
   Evaluation Unit D-R 290 AW: This serves as the "brains" for the opacity system. This uses the same electrical hardware as the D-R 290 AZ but different software. This is typically mounted in a 19" rack using a D-R 290 BT rack mount housing. It can also be wall mounted in a D-R 290 AG housing. The D-R 290 AW serves a display unit, all the system parameters are entered with the key pad, and all the I/O for the data logging system is terminated here.
2. **Transceiver D-R 290 MK**: This transmits light to the reflector and receives the light from the reflector. The D-R 290 MK contains the modulated white LED light source, the detector, and the hardware for performing the daily calibration checks.
3. **Reflector D-R 290 R1 or D-R 290 R2**: Both these types of reflectors auto-collimate the light. This means the light that hits the reflector is returned parallel to the incoming light (back to the transceiver). The R1 reflector is a "scotchlite" material and is for use with flange to flange distances up to 7.4 ft. (2.25m). The R2 reflector is a glass corner cube and can be used from distances of 5.7 ft. (1.75m) to 46 ft. (14m).
4. **Stack Flange D-R 280 E**: This is used to support the monitor on the stack. Different versions are available for brick stacks as well as to adapt to existing flanges.
5. **Purge Air Unit**: This is a centrifugal blower, typically ½HP, with one used on the transceiver side of the stack and one on the reflector side. When larger than standard stack flanges are used (existing) or when the stack is positive pressure a larger blower may be used. Normally these blowers are mounted below the transceiver or the reflector inside the weather hood.
6. **Recording device**: Durag can supply a chart recorder but normally the customer has a recorder or data logging system to use to record the data.
7. **Weather Hoods for transceiver and reflector**: This is a large fiberglass box with a hinged cover to protect stack opacity components from the weather and birds. Normally the purge air system is mounted inside this box below the transceiver or reflector for US built systems. Typically there is one weather hood on each side of the stack.
8. **Weather Hood for purge air system**: For US built systems there is not a separate weather hood for the purge air system. See item 7.
9. **Fail Safe Shutters D-SK 280 MA**: The shutter will close during a loss of power or loss of purge air. This will prevent damage from the stack gas to the opacity system. The shutter may also be used for personnel protection on over pressure stacks.
10. **Fail Safe Shutter Control Electronics D-SK 290 AE**: This is the sensor electronics for the purge air flow sensor and has the battery pack to run the shutter motor, and has control functions to open and close the shutter when instructed.

3.5.1 Configuration options for stack and control room displays

Since the D-R 290 system can be used with or without a D-R 290 AZ and there can be different housings used (primarily for the D-R 290 AW) it can be somewhat confusing. The diagrams below illustrate the different configurations for the D-R 290 AW evaluation unit and the D-R 290 AZ stack display.

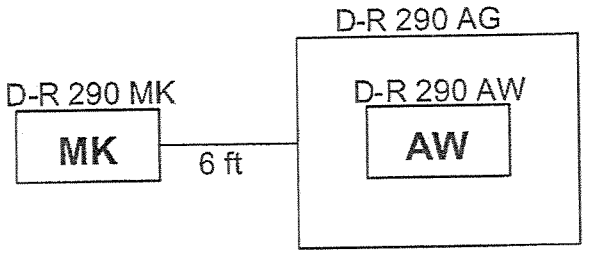

Transceiver connected directly to the D-R 290 AW located at transceiver location. The D-R 290 AW electronic insert is mounted in the D-R 290 AG wall mount housing.

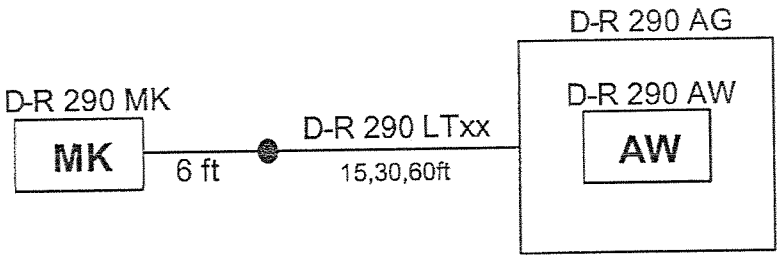

Similar to above except an extension cable is placed between transceiver and D-R 290 AW.

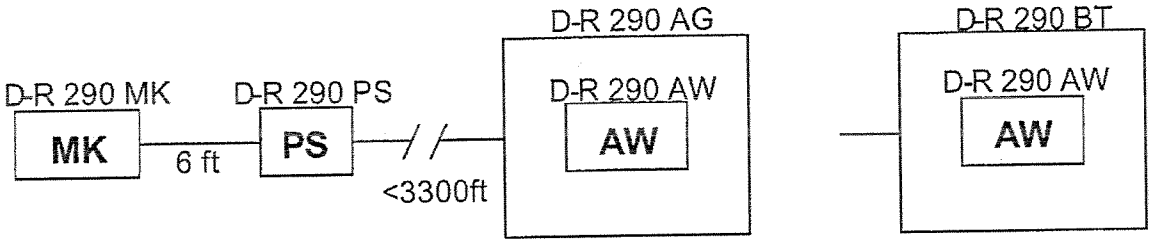

The transceiver is now powered from the D-R 290 PS power supply located at the monitor location. Now the D-R 290 AW can be located up to 3300 feet (1000m) from the transceiver. A 2 pair cable is used to transmit the data over the RS 422 interface. Since the D-R 290 AW unit can be mounted indoors now, a panel mount housing, D-R 290 BT, can be used. More information is given on these different housings in the installation section of this manual.

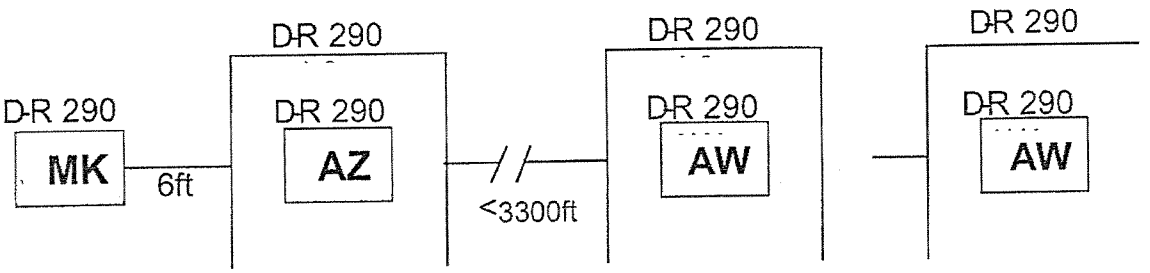

The above diagram shows the recommended mounting arrangement. The D-R 290 AZ is used in the D-R 290 AG housing at the transceiver location. Calibration functions and filter audits can be ran from this location using the D-R 290 AZ. The remotely mounted D-R 290 AW can be mounted in the wall mount or panel mount housing with panel mount in a 19" rack being the most common.

4. Selection of the Measuring Location

The measuring location should be positioned in a straight section of the duct, as far from upstream or downstream turns as possible. 40 CFR part 60, Appendix B, Performance Specification 1 gives guidelines for the mounting location. If necessary, check with local authorities to insure a proper installation location is selected. Try to install the equipment in a location that will allow for service and is free from vibration and with the best ambient conditions possible.

5. Installation

5.1 Flange Installation

For installation of the optic head and the reflector, installation flanges must be installed. For thickly insulated stacks and brick-lined chimneys, the tube must be lengthened accordingly. The flanges are available in carbon steel as a standard and stainless steel as an option. Normally these flanges are welded to the stack but for brick or concrete stacks a plate may be welded to the flange and then bolted to the stack. If existing flanges are available, Durag, Inc. can supply adapter flanges in most cases.

The pipes and installation flanges **must** be precisely aligned to allow the light beam to pass through the flanges. For short path lengths, a pipe may be inserted through the flanges to help align the flanges. For longer path lengths an alignment tool (D-R 280-70) is available from DURAG, Inc. The flange alignment must be within ± 1° of accuracy of centerline. The red dot on the installation flange must be on the top. Often it is recommended that the flange tube protrudes into the stack about 1 inch from the stack wall. This is done so that if rain or condensate runs down the stack wall it should run around the flange tube and not into the flange tube. There are many installations where this is not a concern and the flange tube is flush with the stack wall with no problems.

If the walls are thin, gusset plates must be installed for reinforcement. For stacks with flue gas temperatures of over 482°F (250°C), insulation should be installed. Use of fail-safe shutters is also recommended. If there is an existing set of flanges, DURAG, Inc., can make adapter flanges to mate to these flanges.

If the flange tube length is modified, please note this distance because it will be required when setting up the operating parameters of the system. When the flanges have been installed, measure the flange to flange distance so the monitor can be set up to this same distance on a clear path to get an accurate zero reading.

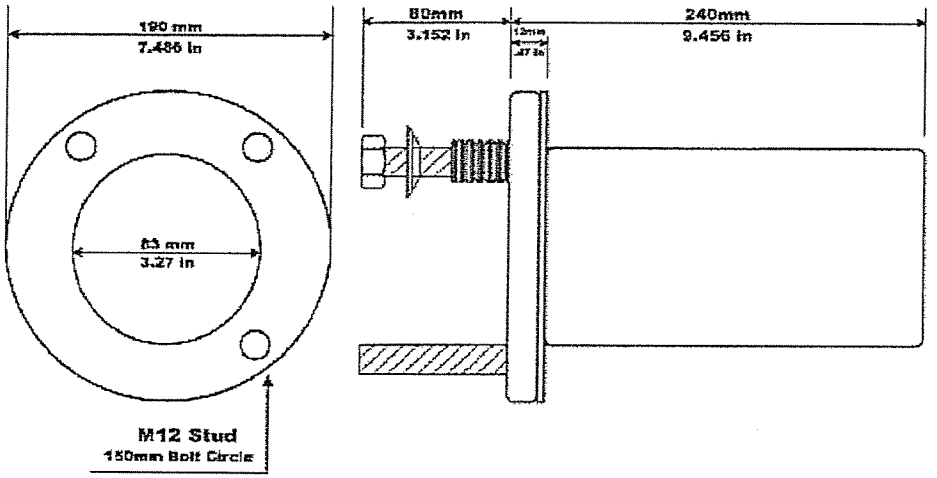

(Fig. 5.1) D-R 280-10E installation flange for D-R 290 Opacity Monitor

Important Note: The red dot on the installation flange must be on top.

5.2 Blower Panel and Weather Hood Installation

In outdoor applications the purge air blower, the stack display unit (D-R 290 AZ), the shutter control electronics (D-SK AE) if used, and a small junction box for power terminations are mounted to the weather hood. The weather hood is a fiberglass box with a cover that hinges. After the stack flanges are installed on the stack, the weather hood is then mounted to the stack. It is recommended to leave a 3 to 4 inch gap between the back of the weather hood and the stack. This will allow for airflow behind the weather hood and help minimize the amount of radiant heat from the stack to the box. If the stack is well insulated this should not be an issue. This box will also serve as a weather hood for the transceiver and reflector. Typically this box is mounted with stand-offs from the stack or by a framework that the box sits into and this framework is mounted to the stack. The weather hood with all components will weigh 100 to 150 pounds depending upon the size of the blower and optional equipment so care should be used when attaching this weather hood and associated mounting hardware. It is important to note that the transceiver side weather hood will be different from the reflector side weather hood. The D-R 290 AZ (stack display) will be mounted in the transceiver side weather hood and the J-Box will be different. There will normally be a sticker labeling this on the back of the weather hood but in the event this gets removed, look inside for the D-R 290 AZ.

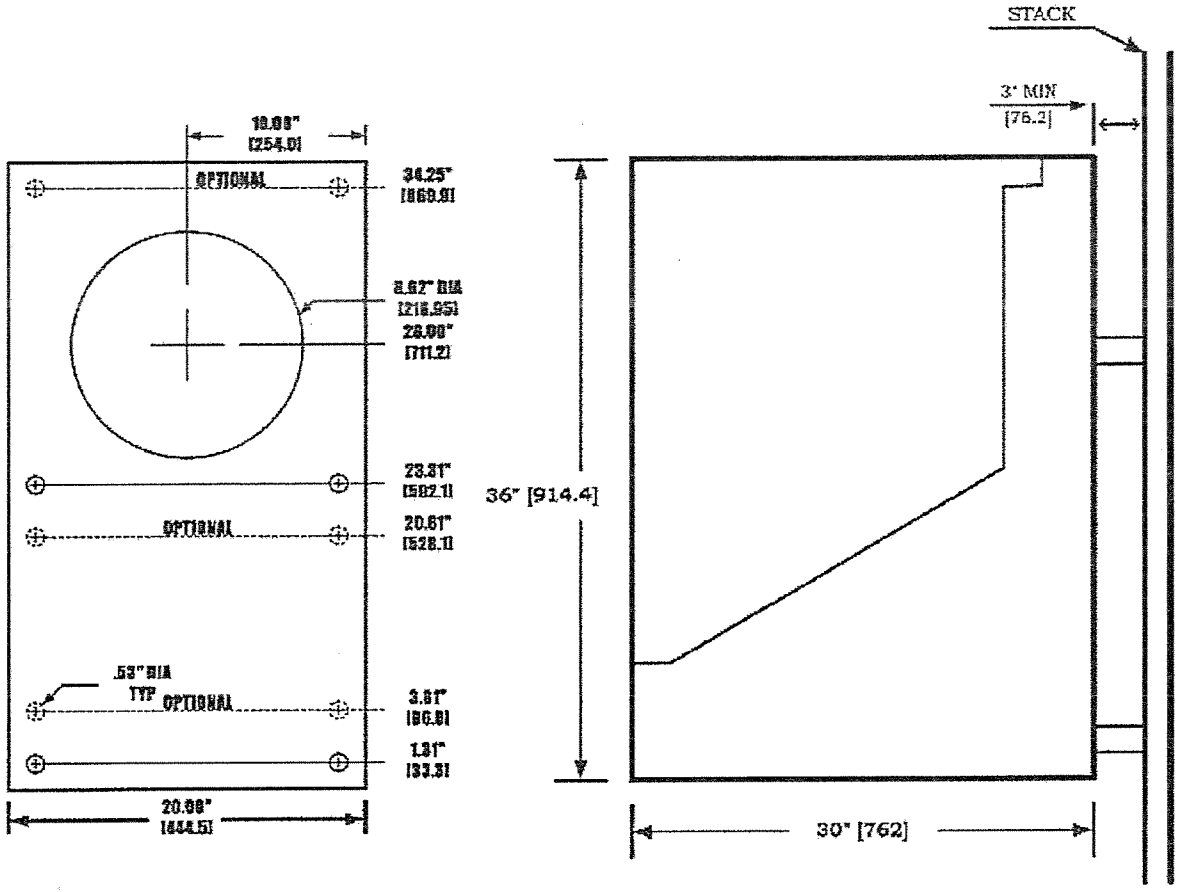

(Fig. 5.2) Weather hood dimensions

5.2.1 Weather Hood and Blower Panel Electrical Installation

Normally Durag, Inc. will pre-wire as much as possible to minimize the number of field terminations. Typically a J-Box will be installed in the weather hood or on the blower panel and the various components will be pre-wired to this J-Box and the customer will make their terminations to a terminal strip in the J-Box. Due to all the different configurations of the blower panel or weather hood (single blower, dual blower, one, two, or no shutters, with or without D-R 290 AZ) it is not practical to show all the wiring diagrams. The specific wiring diagrams will be included with the monitor and can be sent out prior to installation. An example of a typical wiring diagram for the transceiver side and reflector side weather hood is given below.

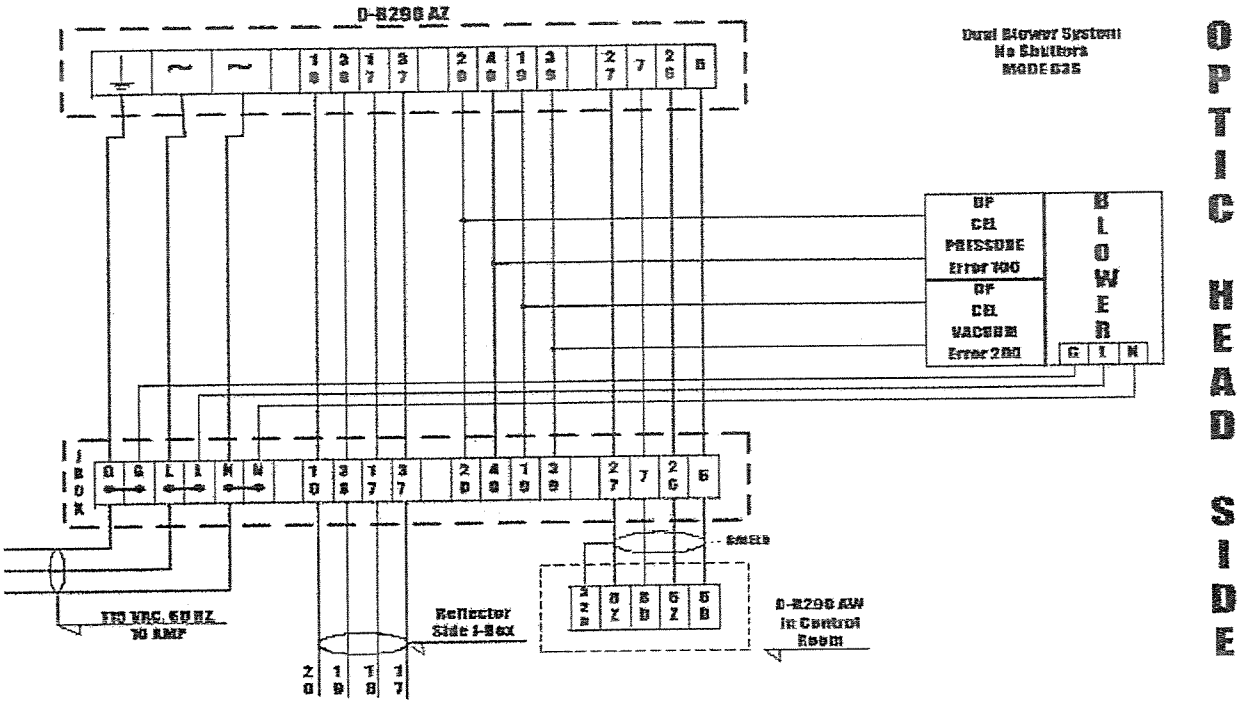

(Fig. 5.3) Transceiver side interconnect wiring, typical

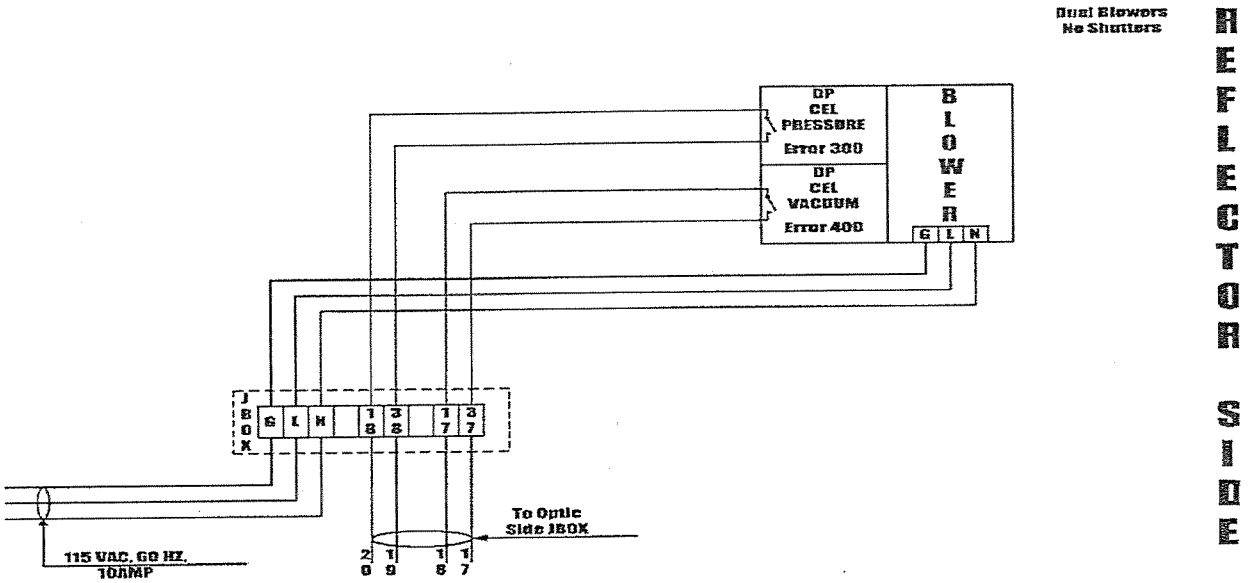

(Fig. 5.4) Reflector side interconnect wiring, typical

5.3 D-R 290 AZG Stack-Mounted Display Module

The D-R 290 AZG consists of two components. The electronic module is the D-R 290 AZ and the housing with electrical terminations is the D-R 290 AG. Since these components are almost always used together, the term D-R 290 AZG is used to refer to this housing with the display electronics.

The D-R 290 AZG is mounted on the stack at the measuring location and is usually mounted in the weather hood. The D-R 290 AG housing has an enclosure rating of IP 65 (corresponding to NEMA 4X) in a watertight aluminum housing. The cable from the transceiver that plugs into the D-R 290 AZG is 6 feet long so the D-R 290 AZG must be mounted near the transceiver.

The buttons and Liquid Crystal (LC) display on the front panel are visible through a transparent cover that swings opens to the left. The terminal connections are towards the bottom of the housing with a separate access cover from the LC display portion of the housing. Cord grip (Pg) fittings are provided for electrical connections and one connector for the connection to the transceiver. Normally only 4 wires for the RS 422 interface will need to be connected to this unit to communicate with the D-R 290 AW. The power, shutter control, and DP Cells will be pre-wired by DURAG. More information regarding the electrical interface is given in the electrical installation section.

The D-R 290 AG housing is normally pre-install in the weather hood but if it must be removed or installed, open the transparent cover, and then remove the electronics insert from the housing, use a screwdriver to release the latch on the right hand side and swing this portion open, and then remove the mounting bolts.

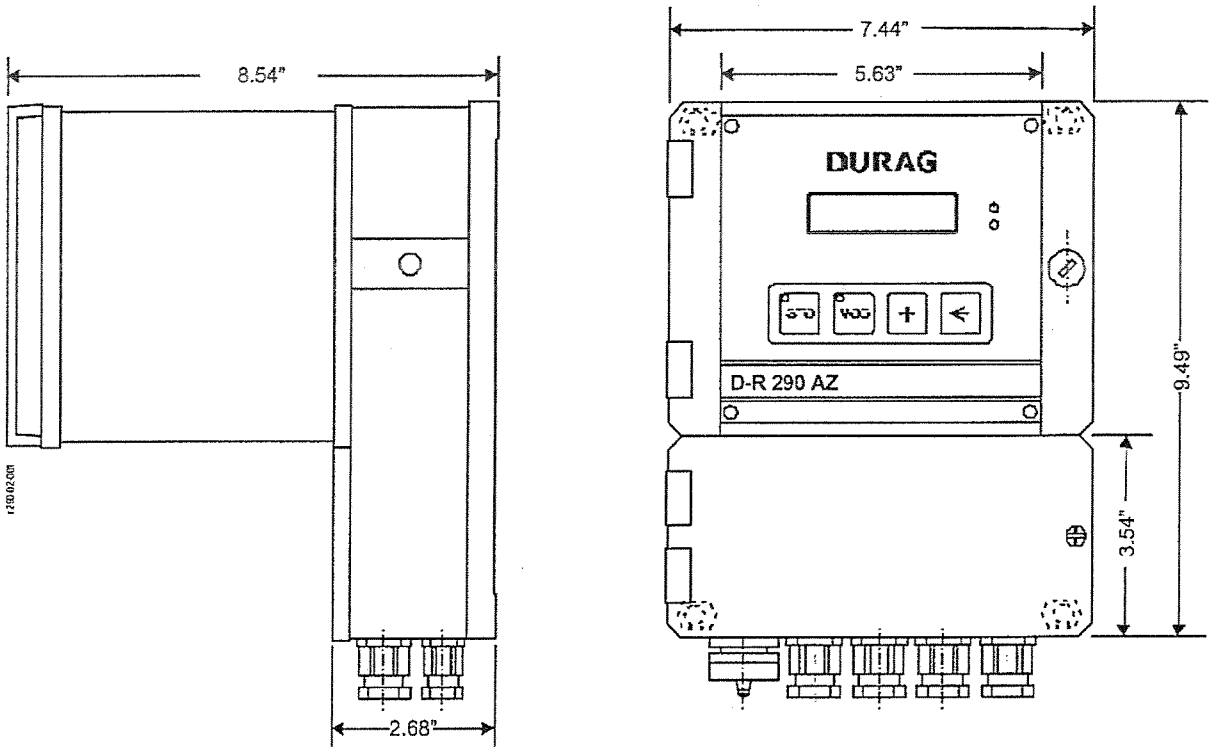

(Fig. 5.5) D-R 290 AG wall mount housing dimensions

Color: Housing body and enclosure are blue RAL 5017.
Ambient temperature: -40°F to +200°F (-40°C to +100°C).
Mounting hole diameter 6,5 mm, spacing 166 x 220 mm.

5.3.1 Electrical Installation, D-R 290 AZG Stack-Mounted Display Module

Normally the D-R 290 AZ is pre-wired and the customer only needs to connect the 4 wires for the RS 422 link to the D-R 290 AW in the shelter.

Stack Display D-R 290 AZ		D-R 290 AZ must be used with D-R 290 AW (evaluation unit)		
Terminal	**Name**	**Function**		
PE	Ground	Power supply 90 - 264 Volt		
N	Neutral			
L	Line			
40	Digital Input 1	Error 100 Blower fail transceiver side		
20				
39	Digital Input 2	Error 200 Purge filter plugged transceiver side		
19				
38	Digital Input 3	Error 300 Blower fail reflector side		
18				
37	Digital Input 4	Error 400 Purge filter plugged reflector side		
17				
36	Digital Input 5	Error 500 Shutter (Optional) fail transceiver side		
16				
35	Digital Input 6	Error 600 Shutter (Optional) fail reflector side		
15				
34	Relay 6	NO	Measuring relay, energized when measuring, Fault, in cal, or power off Relay is de-energized	
14		Common		
33		NC		
13	Relay 5	NO	Warning energizes relay	
32		Common		
12		NC		
31	Relay 1	Status signal when shutters are used For D-SK 1		
11				
30	Relay 2	Status signal when shutters are used For D-SK 2		
10				
29	Relay 3	Used to signal shutter controller D-SK AE 1		To D-SK AE 1 pin 16
9				To D-SK AE 1 pin 17
28	Relay 4	Used to signal shutter controller D-SK AE 2		To D-SK AE 2 pin 16
8				To D-SK AE 2 pin 17
27	RS 422 Link	To D-R 290 AW plug 1, terminal **8Z**		
7		To D-R 290 AW plug 1, terminal **8D**		
26		To D-R 290 AW plug 1, terminal **6Z**		
6		To D-R 290 AW plug 1, terminal **6D**		
4	Analog out 2	plus	4 – 20 ma, 2nd termination	Current signal on the D-R 290 AZ analog Outputs will be the same As on the D-R 290 AW Analog outputs Normally these are not connected Since the D-R 290 AZ is
5		minus		
24	Analog out 2	plus	4 – 20 ma, 1st termination	
25		minus		
2	Analog out 1	plus	4 – 20 ma, 2nd termination	
3		minus		
22	Analog out 1	plus	[illegible]	

23		minus		
1		PE (Ground)		

(Table 5.6) D-R 290 AZ stack display I/O

5.4 Transceiver and Reflector Installation

The transceiver consists of the optical portion in the blue housing and the black purge air flange. The reflector consists of the reflector element in the blue housing and the black purge air flange. The purge air flange is identical for the transceiver and reflector. The purge air flange is connected to the transceiver or reflector by 2 hinge pin bolts. If there is stack gas coming from the stack flanges due to an overpressure stack, the optics of the transceiver and reflector should be protected. The best way to do this is to connect the air hose to the purge air fan and turn on the blower. Make sure the 12 spring washers are on each stud and the black rubber sealing collar is slipped over the flange. Then the purge air flange can be slipped onto the 3 studs on the flange. Next put the spherical washers on each stud and then the lock nut. Tighten the lock nuts until there is some compression of the spring washers. If this is not tightened enough, the system will not be help in position. F tightened too much, the spring will be collapsed and there will not be any vertical or horizontal adjustment to the transceiver or reflector.

Figure 5.7 shows a typical installation:

1.) 12 spring washers (the 16 washers on drawing is from old flange design)

2.) rubber sealing collar

3.) purge air flange of instrument

4.) spherical washer

5.) M12self-lockingnut

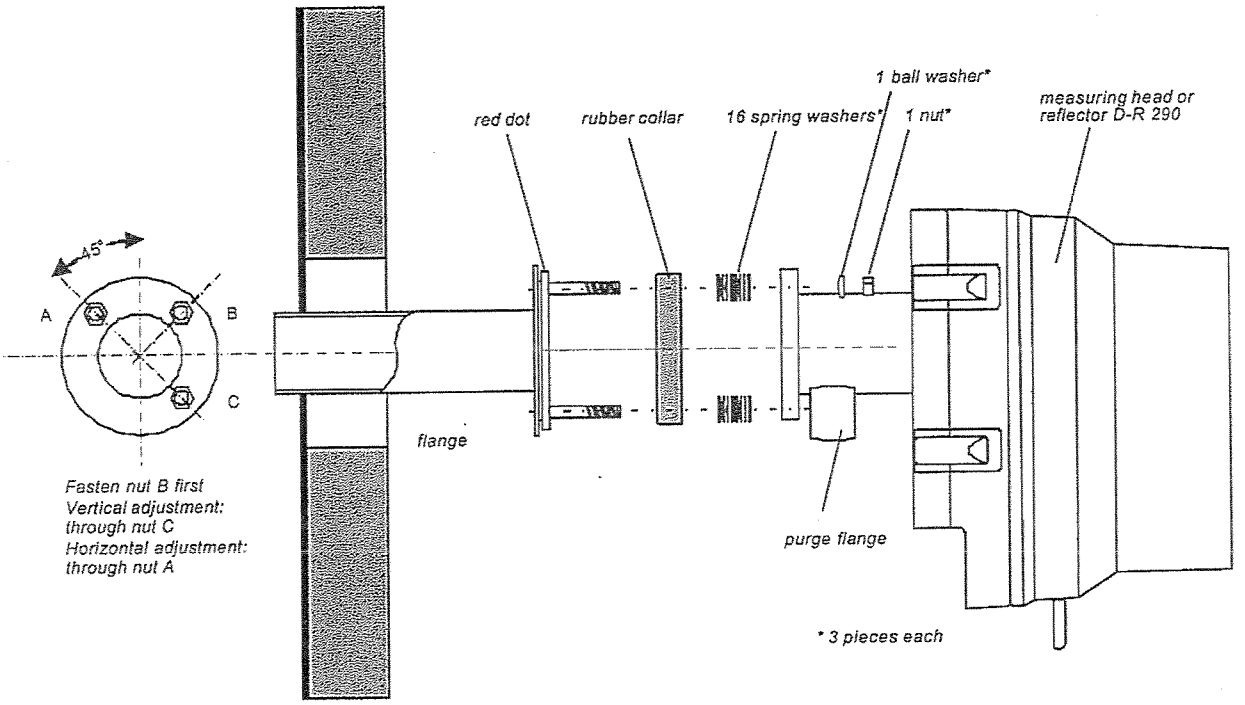

(Fig. 5.7) Mounting monitor on the installation flange

5.4.1 Transceiver and reflector alignment and focus

The transceiver and reflector are aligned to each other by adjusting the 3 nuts on each flange. However this can not be done until **all** the system components have been connected and the opacity system is running. This is because the alignment sight on the side of the transceiver uses the light from the LED to generate the image and the LED is not operating until the system is all powered. Once the system is powered and the initial daily calibration (that starts automatically upon power-up) is complete, the system can be aligned.

To align the transceiver, look through the alignment sight on the side of the transceiver housing. Make sure the reflector is closed on the reflector side. Then by adjusting the nuts on the stack flange of the transceiver side as shown in the previous figure, move the transceiver in the horizontal and vertical directions until the reflector image is centered in the "bulls eye" of the alignment sight. Please note that as the transceiver is moved horizontally, the image in the alignment site will move vertically. On longer range systems the image in the alignment sight may not appear very bright. It may be helpful to cup your hands around the eye piece of the alignment site to block the ambient light when aligning the transceiver. The adjustment nuts should compress the spring washers to the point that the transceiver (or reflector) is stable. The spring washers should not be completely compressed, then there would be no room for further adjust the alignment.

The focus adjustment was set at the factory and should not need to be changed unless the system is being installed at a different path length. The focus only needs to be adjusted for flange to flange path lengths under 88 inches (Reflector 1 systems). For longer path lengths, the focus knob will need to be turned CCW as far as possible to achieve the proper focus. To adjust the focus, loosen the metal thumb screw and then move the objective lens by turning the thumb screw with the plastic knob. Adjust the focus until the image in the alignment sight is sharp. When finished, tighten the metal optics screw again to secure this setting.

To align the reflector, first release the latches and swing the reflector open from the purge air flange. Sight down the inner tube of the purge air flange and look at the light from the transceiver. Adjust the reflector purge

air flange by with nuts on the stack flange until this tube is aligned and pointing at the transceiver. The reflector is auto collimating so the reflector alignment is usually not as critical as the transceiver alignment. This alignment procedure for the reflector requires a judgment call for when the inner tube is aligned. If the end user is not comfortable with this, a purge air flange alignment tool is available from DURAG, Inc. Once the purge air flange is aligned, the reflector will automatically be aligned when the reflector is closed and latched against the purge air flange. Then go back to the transceiver side and verify the transceiver alignment.

5.4.2 Transceiver and reflector electrical installation

The reflector is a passive component and there are no electrical connections. The transceiver has a 6 foot cable with a 10 pin keyed bayonet style connector. This connector will be plugged into the D-R 290 AZG (Stack Display) or will be plugged into the D-R 290 AW on systems without the D-R 290 AZ. A diagram of the cable connections and function is shown below.

Connection to the transceiver D-R 290 MK					
Evaluation unit D-R 290 AW		Transceiver Cable connection			
Plug	Contact	Pin	Cable Nr	Pin X4	Function
Plug 1	32 D Z	Housing	Ground		Ground
Plug 1	12 D Z	B	1	1	+ 15 Volt
Plug 1	32 D Z	D	2	2	GND
Plug 1	14 D Z	C	3	3	- 15 Volt
Plug 1	2 D Z	A	4	4	+ 5 Volt
Plug 1	32 D Z	E	green / yellow	5	PE
Plug 1	32 D Z	F	6	6	GND
Plug 1	8 D	J	7	7	RS 422 < –
Plug 1	8 Z	H	8	8	RS 422 < –
Plug 1	6 D	G	9	9	RS 422 –>
Plug 1	6 Z	M	10	10	RS 422 –>

5.5 D-R 290 AW Evaluation Unit Installation

The D-R 290 AW is typically panel mounted or placed in a 19" rack. The D-R 290 AW electronic insert is the same as the D-R 290 AZ electronic insert except for the software. This electronic insert is then placed into a panel mount housing that has terminal strips on the back for electrical connections. This panel housing has the part number D-R 290 BT. This is usually mounted in a 19 inch rack but this could be mounted in any panel. A ¼ inch thick aluminum plate with a cut out for the D-R 290 BT is available for rack mounting. This plate has the part number D-R 290 AW19 Plate.

It is possible to operate the opacity system with only the D-R 290 AW without using the D-R 290 AZ. In this case the D-R 290 AW electronic insert will be mounted in the D-R 290 AG wall mount housing and this assembly will be called the D-R 290 AWG. The cable of the transceiver will be plugged directly into the D-R 290 AG wall mount housing. An extension cable is available to increase the distance between the transceiver and the D-R 290 AWG. The maximum distance of this extension cable is 65 feet (20 meters) and the part number is D-R 290 LTx where x is the length in meters. DURAG, Inc. recommends using the D-R 290 AZ in most applications and the additional features are well worth the small cost. However there are applications such as when the data logger is located near the opacity monitor where this type of installation would make sense.

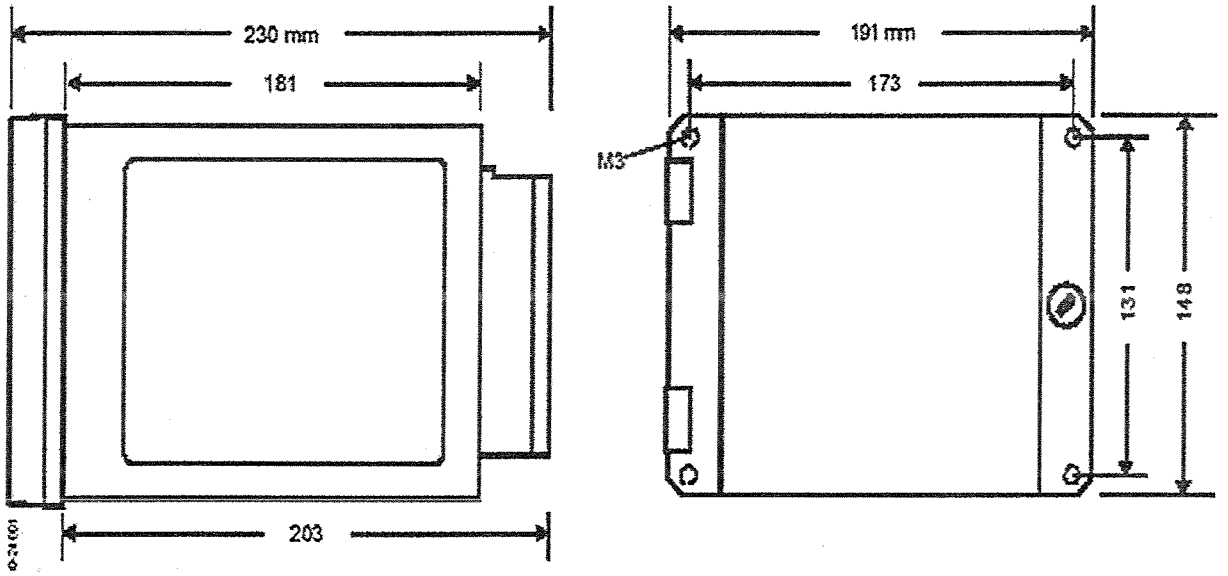

(Fig. 5.8) D-R 290 BT dimensional diagram

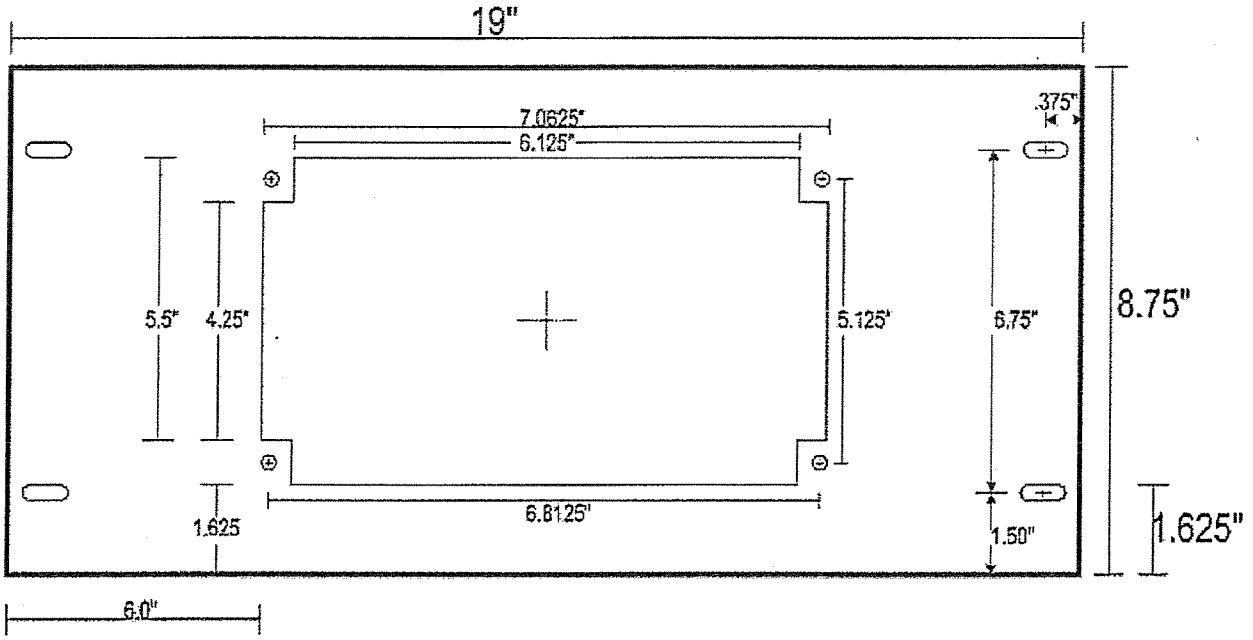

(Fig. 5.9) D-R 290 AW19 dimensional diagram

5.5.1 D-R 290 AW Electrical Connection when used with D-R 290 AZ

Since the in the majority of the installations the D-R 290 AW will be used with the D-R 290 AZ stack display The D-R 290 AW will also be mounted in the control room or shelter and placed in the D-R 290 BT housing. The electrical connections when the D-R 290 AW is used without the D-R 290 AZ will be described in the next section. Electrical connections for the D-R 290 AW control panel are made using the two terminal strips on the back of the D-R 290 BT. These 2 terminal strips are labeled Plug 1 and Plug 2. When you view the back of the D-R 290 BT Plug 1 will be on you right and Plug 2 on the left. The rows of terminals are numbered 2, 4, 6,...32 from top to bottom. The column of terminals on the left is D and the column on the right of the plug is Z. When you see a terminal listed as 32 DZ, the DZ together indicates that the D and Z terminals on row 30 are internally bridged together. **Warning:** These 2 plugs appear identical so one must be careful not to get these two plugs confused. Power is applied on Plug 2 (terminals 28 DZ, 30 DZ, and 32DZ). If you apply power to these terminals on Plug 1 you will probably blow up one of the analog outputs.

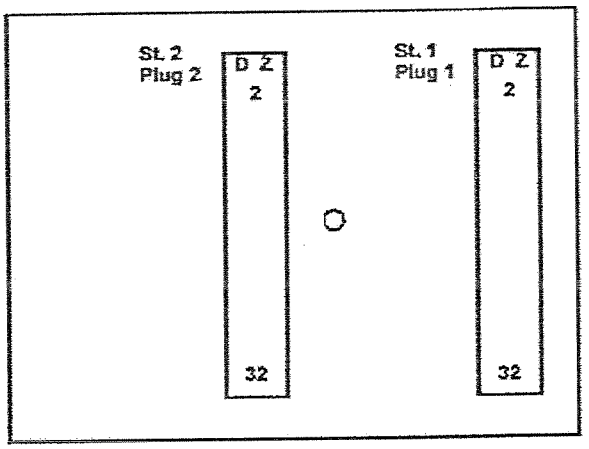

(Fig. 5.10) D-R 290 BT terminal connectors

Evaluation Unit D-R 290 AW		For use when D-R 290 AW is connected to D-R 290 AZ							
Plug	**Terminal**	**Name**	**Function**						
Plug 2	32 D Z	Ground	Power supply 90 - 264 Volt						
Plug 2	28 D Z	Neutral							
Plug 2	30 D Z	Line							
Plug 2	2 D	Digital Input 1	Programming Enable						
Plug 2	2 Z								
Plug 2	4 D	Digital Input 2	Start Cal Cycle						
Plug 2	4 Z								
Plug 2	6 D	Digital Input 3	Set up Mode 0x-5x	External Error 002					
Plug 2	6 Z		Set up Mode 6x	Zero Check					
Plug 2	8 D	Digital Input 4	Set up Mode 0x-5x	Range 2 for Analog Out 1					
Plug 2	8 Z		Set up Mode 6x	Window Check					
Plug 2	10 D	Digital Input 5	Set up Mode 0x-5x	Range 2 for Analog Out 2					
Plug 2	10 Z		Set up Mode 6x	Upscale Calibration Check					
Plug 2	12 D	Digital Input 6	Set up Mode 0x-5x	External Error 003					
Plug 2	12 Z		Set up Mode 6x	Display Stack Factor					
Relays 1-4 Function determined by set-up mode			0x	1x	2x	3x	4x	5x	6x
Plug 2	20 D	Relay 1	None	Limit 1 Analog1	Limit 1 Analog2	Limit 1 Analog1	Zero Check	Zero Check	Zero Check
Plug 2	20 Z								
Plug 2	22 D	Relay 2	None	Limit 2 Analog1	Limit 2 Analog2	Limit 2 Analog2	Window check	Window check	Window check
Plug 2	22 Z								
Plug 2	24 D	Relay 3	D-SK 1	D-SK 1	D-SK 1	D-SK 1	Upscale check	Upscale check	Upscale check
Plug 2	24 Z								
Plug 2	26 D	Relay 4	D-SK 2	D-SK 2	D-SK 2	D-SK 2	Stack Factor	D-SK 1	Stack Factor
Plug 2	26 Z								
Plug 2	16 Z	Relay 5	NO	Warning energizes relay					
Plug 2	18 D		Common						
Plug 2	18 Z		NC						
Plug 2	14 D	Relay 6	NO	Measuring relay, energized when measuring (If in Fault, in cal, or power off Relay is de-energized)					
Plug 2	14 Z		Common						
Plug 2	16 D		NC						
Plug 1	6D	RS 422 Communication	To D-R 290 AZG terminal 6						
Plug 1	6Z		To D-R 290 AZG terminal 26						
Plug 1	8D		To D-R 290 AZG terminal 7						
Plug 1	8Z		To D-R 290 AZG terminal 27						
Plug 1	24 D Z	Analog out 1	plus	4 – 20 ma, 2nd termination	Data on analog Outputs (opacity, optical density, calibration results) is also Function of the Set-up Mode See table 6.1				
Plug 1	26 D Z		minus	Normally not connected					
Plug 1	28 D Z	Analog out 1	plus	4 – 20 ma, 1st termination					
Plug 1	30 D Z		minus						
Plug 1	16 D Z	Analog out 2	plus	4 – 20 ma, 2nd termination					
Plug 1	18 D Z		minus	Normally not connected					
Plug 1	20 D Z	Analog out 2	plus	4 – 20 ma, 1st termination					
Plug 1	22 D Z		minus						
Plug 1	32 D Z		PE shielding for RS 422						

(Table 5.11) D-R 290 AW mounted in D-R 290 BT housing, terminal connections

5.5.2 D-R 290 AW Stand Alone Electrical Connection (No D-R 290 AZ)

Evaluation Unit D-R 290 AW		Only for Use with D-R 290 AW in wall mount housing No D-R 290 AZ is used						
Terminal	Name	Function						
PE	Ground	Power supply 90 - 264 Volt						
N	Neutral							
L	Line							
40	Digital Input 1	Programming Enable						
20								
39	Digital Input 2	Start Cal Cycle						
19								
38	Digital Input 3	Set up Mode 0x-5x	External Error 002					
18		Set up Mode 6x	Zero Check					
37	Digital Input 4	Set up Mode 0x-5x	Range 2 for Analog Out 1					
17		Set up Mode 6x	Window Check					
36	Digital Input 5	Set up Mode 0x-5x	Range 2 for Analog Out 2					
16		Set up Mode 6x	Upscale Calibration Check					
35	Digital Input 6	Set up Mode 0x-5x	External Error 003					
15		Set up Mode 6x	Display Stack Factor					
Relays 1-4 Function Determined by set-up mode		0x	1x	2x	3x	4x	5x	6x
31	Relay 1	None	Limit 1 Analog1	Limit 1 Analog2	Limit 1 Analog1	Zero Check	Zero Check	Zero Check
11								
30	Relay 2	None	Limit 2 Analog1	Limit 2 Analog2	Limit 2 Analog2	Window check	Window check	Window check
10								
29	Relay 3	D-SK 1	D-SK 1	D-SK 1	D-SK 1	Upscale check	Upscale check	Upscale check
9								
28	Relay 4	D-SK 2	D-SK 2	D-SK 2	D-SK 2	Stack Factor	D-SK 1	Stack Factor
8								
13	Relay 5	NO	Warning energizes relay					
32		Common						
12		NC						
34	Relay 6	NO	Measuring relay, energized when measuring, Fault, in cal, or power off Relay is de-energized					
14		Common						
33		NC						
27	RS 422 Link	**Note:** When using D-R 290 AW without D-R 290 AZ Terminals 6 and7 must be connected with a jumper and Terminals 26 and27 must be connected with a jumper to Complete the RS 422 communication to the transceiver						
7								
26								
6								
2	Analog out 1	plus	4 – 20 ma, 2nd termination Normally not connected	Data on analog Outputs (opacity, optical density, calibration results) is also Function of the Set-up Mode See table 6.1				
3		minus						
22	Analog out 1	plus	4 – 20 ma, 1st termination					
23		minus						
4	Analog out 2	plus	4 – 20 ma, 2nd termination Normally not connected					
5		minus						
24	Analog out 2	plus	4 – 20 ma, 1st termination					
25		minus						
1		PE (Ground)						

(Table 5.12) D-R 290 AW mounted in D-R 290 AG housing, terminal connections (No D-R 290 AZ)

6. Operation

Before the D-R 290 opacity system will function, the electrical connections need to be made at the transceiver location (blowers, transceiver, stack display) and the D-R 290 AW will need to at a minimum have power and the RS 422 communication lines terminated. In a typical installation with the D-R 290 AZ stack display, the D-R 290 AW evaluation unit talks to the D-R 290 AZ, the D-R 290 AZ talks to the D-R 290 MK (transceiver) and the D-R 290 MK talks to the D-R 290 AW. In a system without a D-R 290 AZ, the D-R 290 AW and the D-R 290 MK talk back and forth to each other but the D-R 290 AW is the "brains". This is the flow of data in the communication loop. If any piece of the equipment is not powered or there is a wiring error in the 4 wires for the RS 422 there will be a communication error. This will show up on the display panel(s) as an "Error 000". Without communication, the transceiver does not know what to do and will idle and not function. Since in this error condition the transceiver is not functioning, it is not possible to align the transceiver or really do much of anything. The first step is to make sure communication is established, then the transceiver can be aligned or system parameters viewed or changed.

6.1 Operation of the D-R 290 AW evaluation unit

The D-R 290 is controlled using the four buttons and the LCD on the front panel of the evaluation unit. These buttons are membrane switches that are polled about every second. You may have to hold the button in for about a second and then release to activate the desired function. A description of the buttons is given below.

6.1.1 Parameters

There are a number of parameters that the user can set in the D-R 290 evaluation unit such as measuring range, alarm points, integration time, etc. Below is a list of these parameters in the same order as they appear when you scroll through the display as well as a description. These parameters are set by Durag before the system is shipped and normally should not need to be changed.

There are many different data logging systems and many desired features from an opacity system. DURAG has tried to incorporate as much flexibility as possible with a fixed amount of I/O. Many of the features and options will not be used in most cases. The description of the parameters may seem over complicated at first but when you look at just the features you are using, the system should appear much easier to use.

When the parameters are viewed from the D-R 290 AW or the D-R 290 AZ, the system is still measuring and the data on the analog output is still valid until the Filter Audit parameter is reached. The parameters can be scrolled through up to Limit Value 2. At this point the MOD Key can be pressed again and you can step out of the display parameters mode without affecting the measured opacity data on the analog outputs. The last 5 parameters, Filter Audit and the 4 calibration phases, will cause these tests to be performed and the data on the analog outputs and relays will respond accordingly.

6.1.1.1 SET-UP MODE

The set-up mode determines how the systems inputs and outputs (I/O) functions. The data on the analog outputs (opacity or optical density), the function of the digital inputs and the relay outputs is determined by the 2 digit number for the set-up mode.

Opacity: = [OP%], Extinction: = [OD] calibrated in mg/m³.

Set-up Mode I/O Function					
Display 1s digit	***Output - 1 Measuring in***	***Output - 2 Measuring in***	***Control cycle on***		
X 0 S	OD	OD	Output-1		
X 1 S	OP%	OD	Output-1		
X 2 S	OD	OP%	Output-1		
X 3 S	OP%	OP%	Output-1		
X 4 S	OD	OD	Output-1 + Output-2		
X 5 S	OP%	OD	Output-1 + Output-2		
X 6 S	OD	OP%	Output-1 + Output-2		
X 7 S	OP%	OP%	Output-1 + Output-2		
Display 10s digit	***Relay 1 Function***	***Relay 2 Function***	***Relay 3 Function***	***Relay 4 Function***	
0 X S	X	X	D-SK 1	D-SK 2	
1 X S	Limit 1, output 1	Limit 2, output 1	D-SK 1	D-SK 2	
2 X S	Limit 1, output 2	Limit 2, output 2	D-SK 1	D-SK 2	
3 X S	Limit 1, output 1	Limit 2, output 2	D-SK 1	D-SK 2	
4 X S	Zero Check	Window check	Upscale check	Stack Factor	
5 X S	Zero Check	Window check	Upscale check	D-SK	
6 X S	Zero Check	Window check	Upscale check	Stack Factor	
Display 10s digit	***Digital Input 1***	***Digital Input 2***	***Digital Input 3***	***Digital Input 4***	***Digital Input 5***	***Digital Input 6***
0 X S	Enable Programming (close to change parameters)	Start Cal Closed=no cal Open=cal by timer Upon opening =start cal	External Error 002 (Shutter, DP Cell)	Range 2 Output 1 Close to change analog output 1 to range 2	Range 2 Output 2 Close to change analog output 2 to range 2	External Error 003 (Shutter, DP Cell)
1 X S						
2 X S						
3 X S						
4 X S						
5 X S						
6 X S			Zero check	Window	Upscale	Stack factor

(Table 6.1) How set-up mode changes I/O

The ones digit will control the data on the analog outputs. Normally this will be a 3 or a 7 for opacity on both analog outputs. The difference between 3 and 7 is if the calibration data should appear on both analog outputs or just analog output 1. If a 3 is selected for the ones digit, no calibration data will appear on analog output 2 and this output will hold lost value during the calibration cycle.

The tens digit for the set-up mode controls the function of both the digital inputs (3-6) and the relay outputs(1-4). Digital input 1 has a fixed function to enable programming and input 2 is fixed to start a calibration. Digital inputs 3-6 have the same function for set-up mode 0X through 5X. When the tens digit is a 6 the digital inputs 3 through 6 will be to start individual phases of the calibration cycle. In addition to changing the function of the digital inputs, the tens digit of the set-up mode will control the function of relays 1 through 4 as shown above.

6.1.1.2 RANGE 1 OUT.-1

Each analog output has 2 measuring ranges. The analog output is normally in range 1 but it is possible to close a digital input and change to a new measuring range. The value displayed here is for range 1 of analog output 1. The value displayed hear will equate to the 20 ma point of the analog output (4.00 ma will be zero percent opacity). The minimum range is 0 to 20% and the maximum range is 0 to 100% opacity and can be set in 1% steps. This is normally set to 100%.

6.1.1.3 RANGE 2 OUT.-1

This is range 2 of analog output 1. If digital input 4 was closed and the system was in set-up mode 0X through 5X, analog output 2 would change to Range 2. t is very rare that this would ever be done. This value is normally set to 100% (same as range 1).

6.1.1.4 INT. TIME OUT.-1

This is the integration time for analog output 1. This can be set from 5 seconds to 1800 seconds. This is essentially the T95 time or the amount of time to reach 95% of the final value when a step change is applied. This value is normally set to 5 seconds from DURAG to meet the ASTM/EPA 10 second response time specification.

6.1.1.5 RANGE 1 OUT.-2 These are basically the

6.1.1.6 RANGE 2 OUT.-2 same functions as above

6.1.1.7 INT. TIME OUT.-2 but for analog output 2.

6.1.1.8 CHECK CYCLE => HRS

If digital input 2 is left open, the system will go through a calibration cycle periodically by its own timer. The value set here is the time in hours between calibration cycles. This can be set from 1 to 99 hours. If you want the D-R 290 to initiate the calibration every day, this is set to 24 hours. If you want the data logging system to start the calibration, have the data logger close digital input 2 and disable the timer function. When you want the calibration to start, have the data logger open digital input 2 and the calibration will start. The amount of time to open digital input 2 should be at least 1 second (5 is typical) but digital input 2 must close before the internal timer forces another calibration. Some data logging systems can not hold a contact closed for 23 hours and 55 seconds. In this case the time between calibrations could be set this to 25 hours (some value larger than 24). 24 hours from the last calibration the data logger could close digital input 2 for 5 seconds and when this contact opened, the calibration would start. In this case you do not want this time set to 24 hours because you may end up in a race condition to see if the D-R 290 AW timer or the data logger timer reaches 24 hours first. This is why when the data logger initiates the daily calibration this value is normally set to 25 hours.

It is also possible to start a calibration cycle by pressing both the + key and the left arrow ( ) key and hold for at least 5 seconds.

6.1.1.9 WINDOW ALARM

During the daily calibration (or whenever a Window Check is activated), the system will measure the amount of contamination on the exposed optical surfaces (window and zero point reflector). This window check value is then used to compensate the measured opacity to get a more accurate reading of true stack opacity. The EPA allows for a maximum of 4% opacity compensation so this value is normally set to 3.5%. If you want more warning before the maximum allowable compensation is reached, this value can be set to 3.0%. When the value set here is reached, a Error 001 (window contamination exceed) will be generated that will cause a forced message in the display of the D-R 290 and the Warning Relay (R6) will energize.

6.1.1.10 LIMIT VALUE 1

Limit value 1 can be set on either analog output 1 or analog output 2 depending on the set-up mode. The value set here is in milli-amp (not %) and can be set in 0.1 ma steps. When this level is exceeded, the appropriate relay as determined by the set-up mode will close.

6.1.1.11 LIMIT VALUE 2

A second limit value can be set if in the appropriate set-up mode. This functions similar to limit value 1.

6.1.1.12 FILTER AUDIT

This mode is designed so the neutral density filters can be placed into the light path. In this mode the zero point reflector of the transceiver swings into the light path and the system is no longer measuring stack opacity. Before the filter audit test is performed, the optics should be clean and calibration cycle should have been ran so any changes in the window contamination reading from the cleaning will be updated. Undo the 4 clasps and swing the optic head open. The filter holder is located between the exit window and the zero point reflector. The filter holder is designed to accept the standard 2 inch square filters mounted in a 2.5 inch wide frame.

Once you step to this parameter, the zero reflector will swing into the light path and the display will read FILTER AUDIT. The display should read 0.0 +/- 0.2 % opacity and then the filters can be placed in the filter holder. If the display does not show this value, it is possible to adjust this to zero. Press the STO key and the red LED will light. Wait 10 seconds and press the STO key again and the LED will turn off. The value should now have automatically adjusted to 0.0 +/- 0.2 % opacity.

6.1.1.13 ZERO POINT CHECK

The system will now read and display the zero point check value.

6.1.1.14 WINDOW CHECK

The system will now read and display the contamination on the exit window and the zero point reflector. When this test is performed a compensation value is calculated from the contamination on the optics. Subsequent opacity measurements are corrected by this compensation value to give the correct stack opacity reading. When you view the window check, remain at this step for at least 10 seconds to allow for a stable reading. If you step through this value too quick, the window check value that is stored may be wrong and then generate the wrong correction value and could give a window check error (error 001).

6.1.1.15 SPAN CHECK

During this test(also called upscale calibration check), the zero point reflector is still in the light beam and internally, a metal grid filter is moved in the light beam. This attenuation of the light beam will cause an increase in opacity which will be displayed.

6.1.1.16 Stack Correction Factor

The stack correction factor is defined at the stack exit ID divided by the measuring path distance. This is shown in section 3.2 as L2/L1. A straight stack will normally give a stack correction value of 1.000. Sometimes a straight stack will have a stack correction factor slightly over 1 because the flange tubes protrude through the stack wall and into the stack. The range of allowable values for the stack correction factor is 0.5 to 2.9. The 4 to 20 ma will also equate to this 0.5 to 2.9. A stack correction factor of 1.000 will give a signal of 7.33 ma on the analog output.

6.1.2 Key functions

Key

Puts the system into the "*display parameters*" mode. The MOD key LED should be lit in this mode and then you can use the "+" key to scroll through and view the parameters. In this mode the parameters can only be viewed, they cannot be changed.

Key

Puts the system into the "*data entry*" (save) mode. Digital input 1 must be bridged to allow a parameter to be changed. If digital input 1 is open you will see an "Input disabled" message when you try to activate this button. To change a parameter, first use the MOD and "+" key to view the parameter you wish to change. Then press the STO key (the LED will light) and you will see a blinking cursor. Use the arrow key to move the cursor to the digit you wish to change and then use the "+" key to change the digit to the desired value. Then press the STO key again and the LED will go out and the new value is saved. The LED on this button will blink during a fault.

Key

Pressing this key in the *"Display measured value"* (the normal measuring mode) switches the display between viewing the data on analog output 1 or analog output 2. The MOD key LED should not be lit.
In the "*Display parameters*" mode, this key will cause the display to step to the next parameter. The MOD key LED will be lit.
In the "*data entry*" mode, this will change the value of the blinking digit. LEDs on both the MOD and STO keys will be lit.

Key

This key moves the blinking cursor to the next digit in the display. It is active only in the "*data entry*" mode.
The LEDs on both the MOD and STO keys will be lit.

(Fig. 6.2) D-R 290 AW Key Functions

6.1.3 Saving / Data entry

The D-R 290 AW control panel requires digital input 1 to be bridged to enable changing and saving data. If digital input 1 is open. You will not be able to change the parameter. In the D-R 290 BT panel mount housing, digital input 1 is on Plug 2, contact 2D and 2Z. When the D-R 290 AW is in the D-R 290 AG wall mount housing, digital input 1 in on the terminal strip, terminals 20 and 40.

Open: Save function disabled, closed: Save function enabled.

1. Pressing the "MOD" key takes the system out of "*Measuring*" mode and puts it into "*display parameters*" mode. The LED on the MOD button should light.
2. Press the "+" key until the desired value appears in the display field.
3. Press the "STO" key to switch into "*data entry*" mode. The LED on the STO key should light up.
4. One of the digits should be blinking. Pressing the "+" key will increase this number (zero will appear after reaching the number 9). Pressing the " ← " key will move the blinking cursor to the next digit to the left. Again, press the "+" key until the desired number appears. When all digits have been adjusted, the cursor will automatically return to the right-most digit.
5. Pressing the STO key will save the newly entered value and return the system to the "*display parameters*" mode. The LED on the STO key should go out.
6. Pressing the MOD key while in the "*display parameters*" mode will return the system to the "*measurement*" mode. The MOD key LED will go out and the display will show the current measured value.

   If the MOD key is pressed during the "*data entry*" mode before saving, the system will revert to the "*measurement*" mode without saving changes.
7. After changes have been made and saved, digital input 1 can be opened to disable further changes.

	Operating mode	Key sequence	Explanation	Display
	Display measured value			Measured value
		+	Switch the display between the measured value output signal channels	Output 1 Output 2
1	Display parameters	MOD	MOD - LED lights	Measured value
2	Select	+	Select the value you wish to view	Saved value
		Enable data entry. Close the status relay contact input.		
3	Data entry	STO	STO - LED lights	
4	Change value	+	Increase the digit value	Previously saved value
		←	Change digit/move blinking cursor	
5		STO	Save the adjusted value	Changed value
	Display parameters		STO - LED goes out	
6		MOD	If the STO key has not been pressed, the changes will not be saved	
7	Display measured value		MOD - LED goes out	Current measured value
		Disable data changes by opening the status relay input		

(Fig. 6.3) D-R 290 AW operating sequence

6.1.3 Liquid Crystal Display (LCD)

The display has two 16-character lines and these two lines are divided into 4 sections as shown below. All error and warning messages appear in the first line (sections 1 and 2). In the event of an error, the display will alternate between the error message (see page 46 for error messages) and the currently selected display mode.

The display is divided into four sections.

Display during normal measuring

Section 1: Currently selected output

Section 2: If the system is set to automatically run the control cycle at regular intervals, this will display the time remaining until the next control cycle.

Section 3: Calculated value of the current measurement.

Section 4: Current analog-output signal in mA, from output 1 or 2.

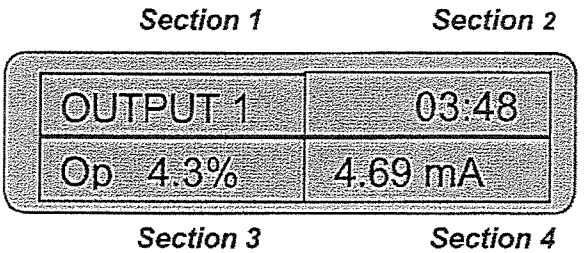

Calibration Cycle Display

Section 1+2: Current phase of calibration cycle

ZERO POINT CHECK, WINDOW CHECK, SPAN CHECK, STACK COR.CHECK

Section 3: Calculated value in % opacity

Section 4: Analog-output signal in mA for the current phase

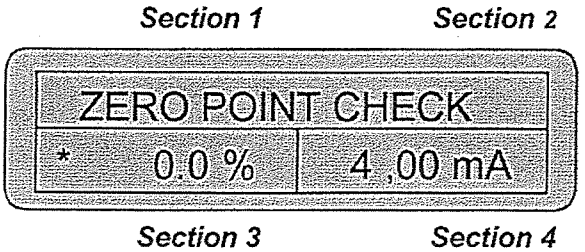

6.1.4 Switch settings and Operation with or without the D-R 290 AZ

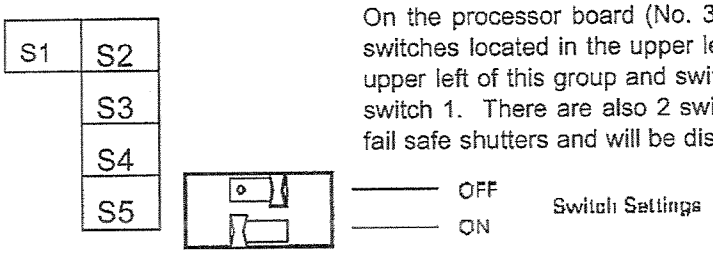

On the processor board (No. 30) inside the D-R 290 AW (and AZ) there are 5 switches located in the upper left corner of the circuit board. Switch 1 is in the upper left of this group and switch 2 through switch 5 are stacked to the right of switch 1. There are also 2 switches on the No. 40 board but these are for the fail safe shutters and will be discussed in the shutter section.

Most of the switches should be in the on position. In the on position the switch will be slid towards the rear of the circuit board (away from the display)

Switch	D-R 290 AW Function	D-R 290 AZ Function
S1	ON means Watchdog Timer on. The default is ON.	Same as AW
S2	ON to work without AZ, OFF when AZ is used	NA, Leave in ON position
S3	Setting of OFF will force analog outputs 1 and 2 to 20 ma which can be adjusted with P1 and P2	Same as AW
S4	Display amplification and LED-current when set to OFF.	Same as AW
S5	IF switch is OFF and digital input 1 closed before power is applied, turning on power will cause default data to be written from EPROM to RAM. Display will show "System Status". After 10 seconds turn off power and switch 5 ON. Only used when changing software versions in AW.	NA, Leave in ON position

(Table 6.4) D-R 290 AW and AZ processor board switch functions

Since the hardware of the D-R 290 AW and the D-R 290 AZ is identical, it is possible to change the software and make one unit function as the other. This may be useful during trouble shooting or it may be convenient to turn a D-R 290 AZ in a wall mount housing (possibly a spare) into a D-R 290 AW (operation without AZ) to perform a clear path of the opacity monitor. When using the electronic insert as an AW or AZ, it is important to remember to get the switches in the correct position, connect the RS 422 wires or jumpers (see electrical installation), and if you are changing software versions in an AW or changing an AZ to an AW, load the software constants from the EPROM as described above.

6.2 Operation of the D-R 290 AZ Stack Display Unit

The operation of the D-R 290 AZ is nearly the same as the D-R 290 AW. The most important difference is that no parameters can be modified from the D-R 290 AZ, it is display only. However the phases of the calibration (zero check, window check, span check, and stack correction factor) can still be initiated. The relay outputs and digital inputs are also different and this can be seen in section 5.3.1.

6.3 Reflector Operation

The following reflectors can be used with the D-R 290 opacity monitor:

Type	Flange to flange stack distance	Model
reflector 2	Between 5.75 and 45 feet (1.75–14.00 m)	Glass corner cube with optics
reflector 1	Between 1 and 7.5 feet (0.5–2.25 m)	Scotchlite

The reflector should be selected according to the opacity flange-to-flange distance. If the stack diameter is 3 feet, then have 2 foot long, 4" ANSI flanges on each side of the stack, then have 6" long adapter flanges to adapt from the ANSI to the opacity monitor, the flange to flange distance will be 8 feet even though the stack diameter is only 3 feet. This example would then require a type 2 reflector.

Since the reflector is passive the only action required is an occasional cleaning. When the window check indicates the transceiver optics require cleaning, the measuring reflector should be cleaned as well. Keeping a good purge air is also important in keeping the reflector and transceiver optics clean. The type 1 reflector is a Scotchlite material that can be damaged by high temperatures that could be encountered when the purge air fails.

6.4 Transceiver Operation

6.4.1 Maintenance

The D-R 290 MK opacity monitor transceiver requires little attention during normal operation. Periodically, when indicated by the window check results during the daily calibration, it may be necessary to clean the window and the zero point reflector with a soft cloth. Sometimes it may be helpful to use water, alcohol, or glass cleaner to clean the optics. Be careful if a cleaning solution of some type is used that it does not leave a film (this could adsorb light) and it does not have any abrasives that could scratch the optics. In most cases a clean, dry, soft cotton cloth will work fine.

The time between maintenance will vary based on the conditions at the installation. The stack conditions as well as the ambient conditions will determine the maintenance frequency. In general, a check of the equipment should be made every month. This includes a check of the fail-safe shutter system, if applicable.

A maintenance routine should include the following steps:

1. Clean the external parts of the unit.
2. Check the condition of the fail-safe shutters.
3. Check all seals and mounting hardware.
4. Check the purge air system and the air hose.
5. Check the filters: Although it may be possible to clean the air filter, it is usually better just to replace. The replacement elements are inexpensive and with cleaning there is always the risk of tearing the filter. The maintenance interval will depend on the dust loading in the ambient air. **NOTE: Keeping a good flow of purge air is the single most important step for the longevity of the opacity system.**
6. Cleaning the external optics: After opening the clasps on the housing, the transceiver and reflector can be swung open. Use a clean optics cloth to clean the transceiver window, zero point reflector, and the measuring reflector.
7. Any deposits or build-up in the mounting flanges should be removed. Dirt on the fail-safe shutter can be removed with a brush or cloth and a cleaning solution that dries without leaving a residue. Never use a solution that damages aluminum.

Warning!
Do not insert fingers into the fail-safe shutter system.
Serious injury may result!

6.4.2 Transceiver circuit board

There is only one circuit board, the D-R 290 MKLP20, in the transceiver. Values that affect the measurement of transmission and in turn opacity are stored on this circuit board. The D-R 290 AZ stack display or the D-R 290 AW evaluation unit can be replaced without changing the opacity measurement (as long as the stack correction factor in the D-R 290 AW remains the same).

The opacity system is normally adjusted at the factory for a specific installation. It should not be necessary to adjust the system. However, it may occur that the stack dimensions given to Durag, inc. came from stack drawings or were not correct for some other reason. Another reason the system may need to be adjusted is if the monitor is relocated. To adjust the opacity transceiver the switches on this main circuit board to be changed. The location of these switches is shown in the diagram below. **NOTE:** Make sure there is a valid reason before performing any adjustment. For example if a dear path procedure is run on the stack with opacity in the stack, the system has been "re-zeroed" and the opacity reading from the system will be wrong.

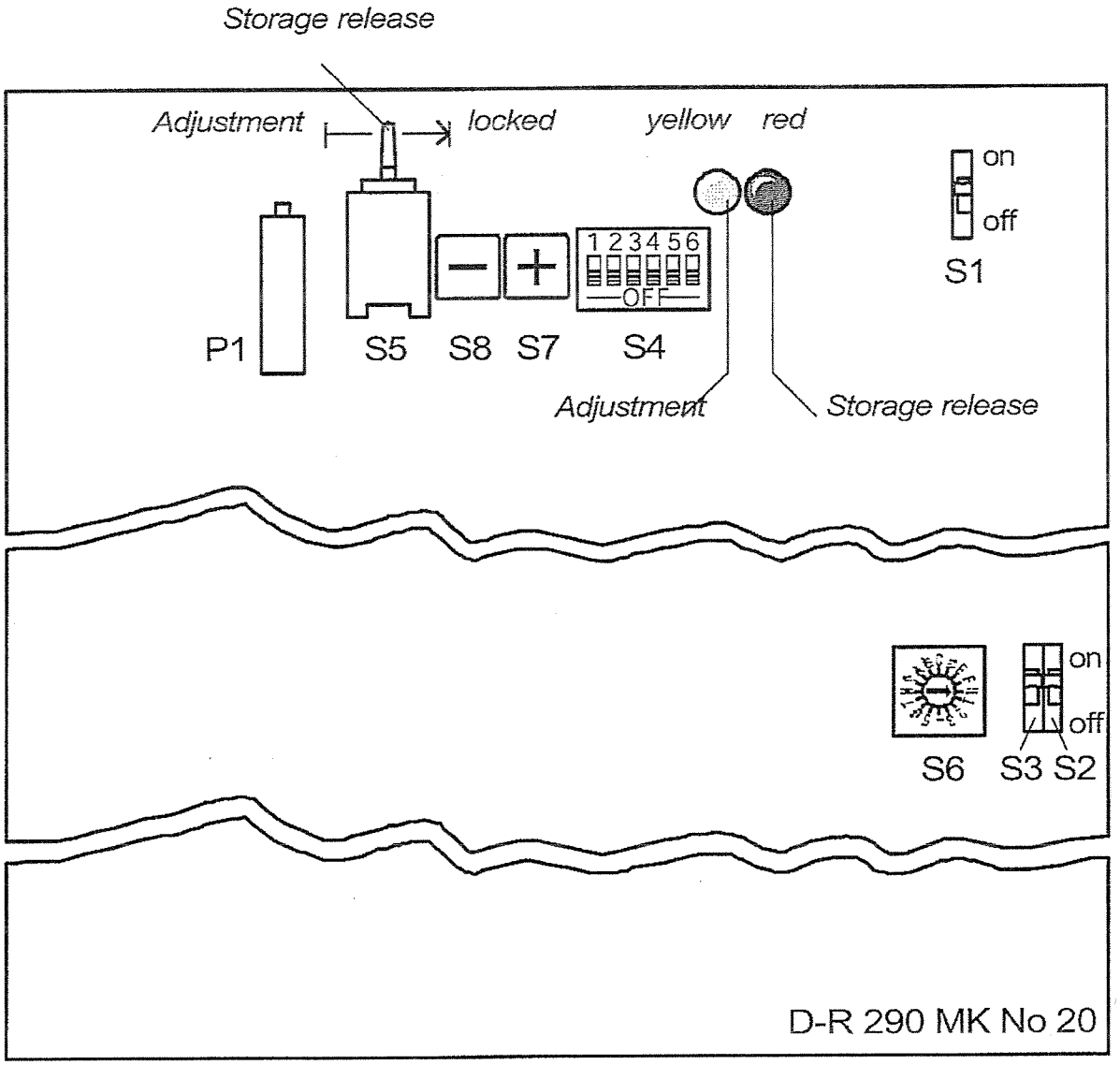

(Fig. 6.5) Transceiver switch functions

6.4.2.1 Transceiver Switch Functions

When using these switches, pay special attention to the switch position. Due to the microprocessor logic, sometimes the switch function is activated by turning the switch off. Some of the switches have a default position of on and some off. This manual will try to use up and down arrows (↑ or ↓) whenever possible to show the position of the switch.

Switch S1

This is for the watchdog timer function for the processor. The default position of this switch of this switch is off ↓ (in the down position) which will turn the watchdog timer on. This switch should be in the down position and not be moved.

Switch S2

This switch allows (in combination with S3 and S5) for special adjustment procedures such a clear path adjustment and LED current setting. This switch can also be used with S6 to access special test routines. How to use these switches is described in the appropriate section (clear path adjustment, window check adjustment, etc.). The normal position of this switch is ↓ (off).

Switch S3

This switch allows (in combination with S2 and S5) for special adjustment procedures such a clear path adjustment and LED current setting. This switch can also be used with S4 to adjust individual measurements such as the window contamination reading or the stack opacity zero. The normal position of this switch is ↓ (off).

DIL- Switch S4

S4 is actually 6 individual switches that are numbered 1 through 6. In an adjustment procedure you may see one of these switches referred to as S4/1. This means switch 1 of the S4 block of switches. This switch is enabled by S3. The default position for all 6 of these switches is the ↑ up or on position. To activate the feature associated with the individual switch, the switch will be slid down ↓ to the off position. Only 1 of these switches will be in the down ↓ position at any time. Use these switches with caution since the accuracy of the monitor may be changed.

S4/	Function
1	Slope in measurement mode
2	Slope in filter audit mode
3	Slope in span check
4	Offset in internal zero point (window check)
5	Offset in external zero point (measurement)
6	Basic calibration (reference light path gain setting and in turn LED current is set. **Warning: This will destroy all stored transceiver parameters.**

Switch S5

This is the blue toggle switch near the top of the circuit board. This is a 3 position switch back and center positions being fixed and the forward position is momentary. In the back position the system can not write any parameters to memory. This is the default position. The red LED will be off. In the center position data can be written to memory and saved. The red LED will be on. Moving the switch forward to the momentary position

will start an automatic adjustment procedure that is determined by the position of switches S1 through S4. The yellow LED will blink.

Switch S6

This is a 16 position rotary switch that is only used for special test functions. The function of this switch is described in the service manual and will not be discussed further.

Switch S7 and S8

These are momentary push button switches used in conjunction with S4. S7 when depressed has the + (plus) function and is located next to S4. S8 has the – (minus) function and is located next to S5. In certain adjustment procedures, the D-R 290 AZ or AW display will show the plus and minus symbols. S7 or S8 will then be pressed to raise or lower the selected value.

6.4.3 Clear Path Procedure

In this procedure the measuring zero is set. The transceiver and reflector are mounted to the exact distance as on the stack or duct in a clean room with minimum dust in the air such as an air-conditioned office. This procedure then adjusts the monitor so that a zero percent opacity reading is obtained.

This procedure was done in the factory and normally will not be done in the field. Some examples of when this procedure would need to done in the field are: The flange to flange distance on the stack is not the same as was supplied to DURAG, the system is being relocated to a new measuring location with a different flange to flange distance, the measuring reflector was damaged by improper cleaning so the system needs to be re-zeroed, the D-R 290MKLP20 circuit board was replaced.

The values determined during the clear path procedure are stored in the transceiver. It may be convenient to leave the D-R 290 AW (and D-R 290 AZ if used) in their respective housings and use a spare D-R 290 AW (or D-R 290 AZ with AW software installed) mounted in a D-R 290 AG housing. This way all the existing wiring can stay in place.

The display during adjustment

Segments 1 + 2: Current calibration function

Segment 3: Amplification factor

Segment 4: LED - Current

Line 1 ***Segment 1*** ***Segment 2***

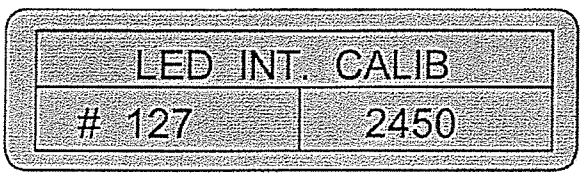

Line 2 ***Segment 3*** ***Segment 4***

The clear path procedure should be run in the following order:

1. Set up the transceiver and reflector in a dust-free room to the exact optical path length as on the stack or duct. Make sure the test stands or flanges put the transceiver and the reflector in proper alignment. Make sure to include the appropriate allowances for the spring washers and fail-safe shutters if applicable. Clean the optical surfaces (transceiver window, zero reflector, and measuring reflector) with a soft, optics-safe cloth.
2. Open the four hasps on the transceiver and swing the housing open. With a 4 mm allen wrench, remove the six screws that secure the cover and remove it from the transceiver. Be careful not to drop the cover on the circuitry when removing the last screw. Swing the transceiver shut and latch the hasps. Supply power (connect plug "St1") to the transceiver and the DR 290 AW controller (and DR 290 AZ if applicable). Once turned on, the DR 290 will run a self-check cycle and check the value of the comparison light beam. The LCD display will read: **REF. LIGHT CHECK** on line 1. Once the automatic self-check has been completed and LED intensity has been set, the system can be calibrated (the yellow LED will go out).
3. Put switches **S2** and **S3** in the up, "**ON ↑** " position, Display line 1: **ZERO EXT. CALIB** .
4. Optically align the transceiver and reflector. (see section 5.4.1) It may be necessary to focus the transceiver if this system uses a reflector 1 and the path length was changed.
5. Return switches **S2** and **S3** to the lower, "OFF **↓**" position, the push toggle switch **S5** towards the front of the monitor for 2 seconds. Switch **S5** can then be allowed to return to the center position. At this point the yellow LED should continue blinking and the red LED should be continuously lit. The lower line of the display (on the AW controller) should be working.
6. Display line 1: **LED INT. CALIB** the comparison light beam is calibrated. The LED current is fixed and the gain setting is determined to give a pre-determined output (8 volt at TP3).
7. Display line 1: **ZERO POINT CALIB** the internal zero point value is calibrated to determine the gain for the zero point reflector.
8. Display line 1: **SPAN CALIB** The reference light path is calibrated.
9. Display line 1: **ZERO EXT. CALIB** the external zero point value is calibrated.
10. After the clear path calibration procedure, the system automatically perform a calibration cycle. To allow these new clear path values to be saved, switch **S5** must be pushed back (the red LED will go out).
11. Loosen the 4 hasps on the transceiver head, swing open the transceiver, and replace the lid to the housing, making sure to secure all six screws. The transceiver head can then be closed and the hasps fastened again.

6.4.4 Manual internal zero point (Window Check)

Normally the window check reading should not need to be electrically adjusted. If the window check reading increases it indicates there is dust or contamination on the window or zero point reflector. Cleaning these surfaces should return the window check reading to near zero percent opacity (4.0 ma). At some time it may be necessary to adjust the window check reading back to zero. It is possible that over time the window or zero point reflector may have been scratched or damaged from improper cleaning or contamination on internal optics that is not possible to clean.

1. Clean the optical surfaces of the transceiver, the window and the zero point reflector, with a cloth designed for optics that does not leave any residue. Using the "MOD" and "+" keys on the control panel, select the "window check" measurement.
2. Remove the cover of the D-R 290 MK transceiver housing. On the circuit board, push switch **S4/4** on the 6-terminal switch **S4** to the OFF↓ position. Put switch **S3** (calibration function) to the ON↑ position. Toggle switch **S5** must be set to "free memory access" (the center position), so that the red LED lights. The first line of the display should alternate between "OFFSET - +" and "WINDOW CHECK".
3. Press push button **S8** [-] for a lower value and button **S7** [+] to increase the value to adjust the internal zero to 4.0 mA. Keep in mind that this new value will not take effect until after the 5-second integration time. Therefore, use the buttons briefly, and then wait at least 5 seconds before pressing a button again. The yellow LED should light when the buttons are being used.
4. At the end of the calibration, the switches should be returned to their normal positions. Switch **S5** should be set to OFF, which will turn off the red "data entry" LED. On the switch, **S4/4**, push **S4** to the ON↑ position. Switch **S3** should be put in the OFF↓ position. Place the housing lid back on the unit and tighten the screws.

6.4.5 External Zero Point Calibration

The external zero reading was also set at the factory to zero percent opacity and normally should not be adjusted. This procedure is basically one portion of the clear path procedure that was described above and can also be used to set the opacity reading to zero on a clear path. This procedure however will only affect the measured opacity reading and will not change the internal reference value or the window check reading. This procedure may need to be performed if the window or the measuring reflector is damaged.

1. Set-up the transceiver and the reflector in a dust free room (such as a clean office area) at the exact stack flange to flange distance and do the optical alignment. Clean the optics surfaces (window, zero reflector, and measuring reflector) carefully with a cloth designed for optical equipment. Check that the integration time is set to a short value (such as 5 seconds) or change if necessary on the D-R 290 AW control panel and return the system to normal measuring mode. The integration time is set to a small value to minimize the amount of time spent waiting for the adjustments to reach the final value.
2. Remove the cover for the electronics on the D-R 290 MK transceiver. On the circuit board, locate the 6-terminal switch **S4** and push the **S4/5** switch to the OFF↓ position and the calibration switch **S3** to the ON↑ position. Switch **S5** must be set to the "allow memory access" position (center position with the toggle lever straight up and down) so that the red LED lights. The first line of the display should alternate between "OFFSET - +" and "OUTPUT X".
3. Press button **S8** [-] for a lower value and button **S7** [+] to increase the value to adjust the external zero to 4.0 mA. Keep in mind that this new value will not take effect until after the 5-second integration time. Therefore, use the buttons briefly, and then wait at least 5 seconds before pressing a button again. The yellow LED should light when the buttons are being used.
4. At the end of the calibration, the switches should be returned to their normal positions. Switch **S5** should be set to OFF (back), which will turn off the red "enter value" LED. On the switch, **S4**, push **S4/5** to the ON↑ position. Switch **S3** should be put in the OFF↓ position. Place the housing lid back on the unit and tighten the screws. Reenter and save the old integration time on the D-R 290 AW control panel.

7. Error Messages

In the event of an error, the upper line of the LCD (segments 1 and 2) will alternately display an error message (as shown in the table) as well as the currently selected display. The LED on the STO key will also blink. After ten seconds, the associated relay contact will activate.

LCD-Display	ERROR	Probable Cause	R6	R5
ERROR 000	Communication error	1.Communication wires not connected correctly 2. RS 422 driver chip damaged (lightning) see schematics in service manual	X	X
ERROR 001	Window contamination exceeded	1. Window or zero reflector dirty – clean 2. Physical damage to window or zero reflector 3. Zero reflector loose or out of position		X
ERROR 002	External AW error 1	Input 1 has closed from external source- check connected device (DP Cell, switch)		X
ERROR 003	External AW error 2	Input 2 has closed from external source- check connected device (DP Cell, switch)		X
ERROR 004	EEPROM fault	Call DURAG for assistance		X
ERROR 005	RAM fault	Call DURAG for assistance	X	X
ERROR 006	PROM fault	Call DURAG for assistance	X	X
ERROR 007	AW system fault	Call DURAG for assistance	X	X
ERROR 010	Comparison normal error	Comparison signal out of specification-check Comparison normal reflector in transceiver		X
ERROR 020	External zero fault	System not able to determine valid gain setting for External zero during clear path-call DURAG		X
ERROR 030	Internal zero fault	System not able to determine valid gain setting for internal zero during clear path-call DURAG		X
ERROR 040	Stepper motor failure	Check zero reflector and filter wheel stepper motors And photo switch in transceiver for proper operation	X	X
ERROR 050	LED fault	1. Replace LED assembly 2. Check for dirty/damaged internal optics 3. Faulty photo-detector	X	X
ERROR 060	Heated exit window fault	Exit window heat trace or wires damaged		X
ERROR 070	MK system fault	Call DURAG for assistance	X	X
ERROR 100	AZ input 1 fault (Blower transceiver side)	1. Blower failure or loss of power 2. Faulty DP cell		X
ERROR 200	AZ input 2 fault (Filter transceiver side)	1. Air filter restricted-replace element 2. Faulty DP cell		X
ERROR 300	AZ input 3 fault (Blower reflector side)	1. Blower failure or loss of power 2. Faulty DP cell		X
ERROR 400	AZ input 4 fault (Filter reflector side)	1. Air filter restricted-replace element 2. Faulty DP cell		X
ERROR 500	AZ input 5 fault	1. Blower failure transceiver side when shutters used 2. Shutter failure transceiver side		X
ERROR 600	AZ input 6 fault	1. Blower failure reflector side when shutters used 2. Shutter failure reflector side		X
ERROR 700	AZ system fault	Call DURAG for assistance	X	X

(Table 7.1) Error messages

8. Purge air system

The purge air system protects the monitor from contamination on the external optical surfaces and keeps the unit from overheating. Typically a ½HP centrifugal purge air blower is used on each side of the stack when the stack pressure is neutral or negative. When the stack pressure is 10 inches water column positive or more, a 1 HP blower is usually recommended.

When selecting the mounting location, the following conditions must be met:

- The air used should be as dry and dust-free as possible. In extremely dirty environments, it may be advisable to relocate the air intake or filter to a cleaner area.
- The air temperature should not exceed 104 F (40°C).
- There must be enough room to allow for changing the air filters.
- If the purge air unit will be mounted outdoors, a protective weather hood is available.

WARNING

The purge air system must be turned on at all times when the D-R 290 is mounted at the measuring location. This applies even when the D-R 290 itself has been turned off. Make sure the purge air unit electrical systems are secured separately from those of the D-R 290 itself.

9. D-SK 290 Fail-safe Shutters

If the D-R 290 monitor is intended for use on an exhaust duct or smokestack, in which a high stack-pressure is present, a failure of the purge air system can lead to serious damage or destruction of the monitor. To protect the system in such an event, D-SK 290 fail-safe shutters can be installed. The shutter system consists primarily of a motor-driven quick close shutter D-SK 280 and the D-SK AE control electronics with the air current sensor F2.

Installation of fail-safe shutters offers effective protection against this type of damage. The D-R 290 installation flange has long enough studs to allow the D-SK 290 fail-safe shutter between the flange and the transceiver or reflector. These fail-safe shutters mechanically block the opening between the monitor and the exhaust gas in the event of a blower fail or loss of power. Due to possible overheating, however, the D-R 290 should never be left on the stack without purge air for extended time periods.

The control electronics, D-SK AE, is the same for all DURAG products. The shutter will vary depending upon the DURAG product it is used with and type of mounting flange. Since the D-R 290 uses the same installation flange as the D-R 280 and D-R 281, the shutter used will be the same as used with the D-R 280. This is why the shutter for the D-R 290 will have the number D-SK 280 MA.

9.1. Function

After turning on the power supply and detecting purge air, the fail-safe shutter will automatically move to the "OPEN" position. If the power or the purge air blower fails, the shutter will close. For such an event, the D-SK AE electronics has a Ni-Cad battery pack to supply power to the shutter motor. After the problem has been corrected, the shutter will automatically open again. There are cams off the motor shaft that drive switches to give "shutter open" and "shutter closed" status signal. Terminals 7 and 8 in the D-SK AE will close when the shutter is open. Terminals 7 and 9 will be closed when the shutter is closed.

The battery charge is indicated by the *"battery charging LED"* on the front panel. The LED remains lit during rapid charging and blinks during a normal "float" charging. The fail-safe shutter can be manually closed by pressing the manual push-button (or flipping the toggle switch) on the front panel of the control electronics.

The D-SK 290 fail-safe shutter can be tested using the input relays (terminals 16 and 17) for "close shutter". When the connection between terminals 16 and 17 is opened, the shutter will automatically close. The shutter closed message is transmitted over terminals 7 and 8 (closed contacts).

Schnellschlußklappe D-SK 280 MA
Fail Safe Shutter D-SK 280 MA

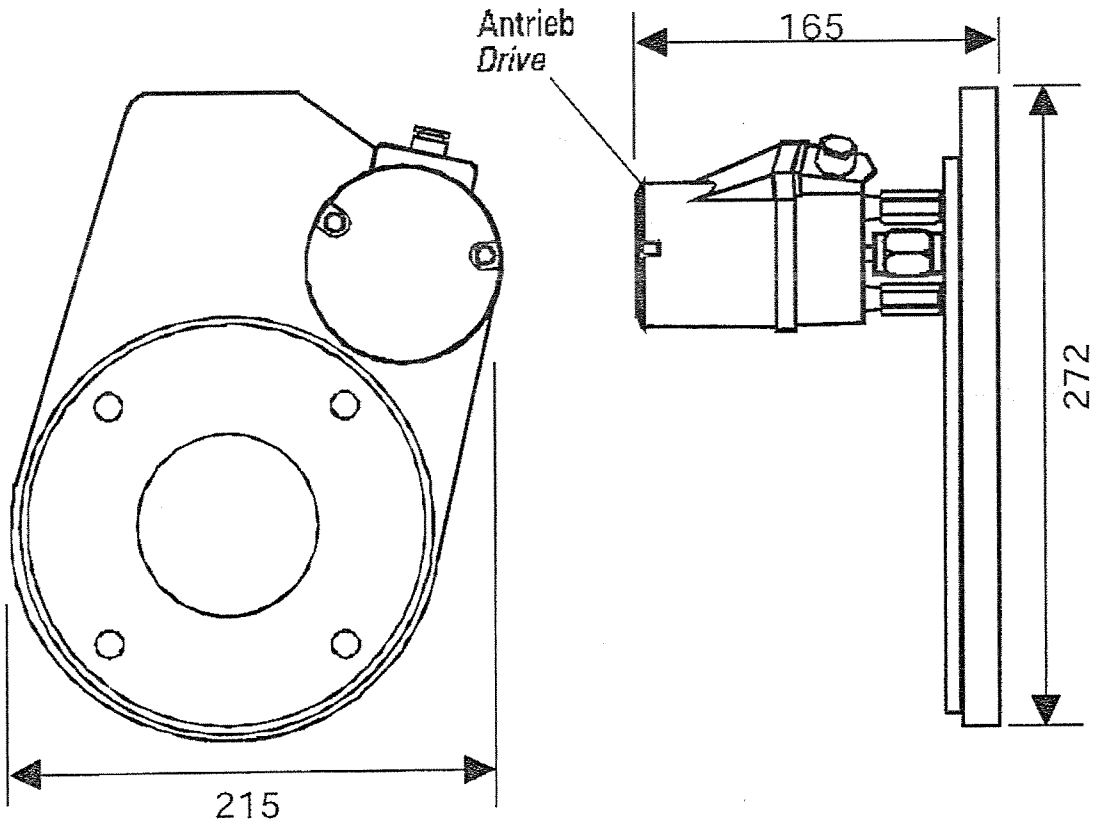

(Fig.9.1) Dimensions (in mm) of shutter (D-SK 280 MA)

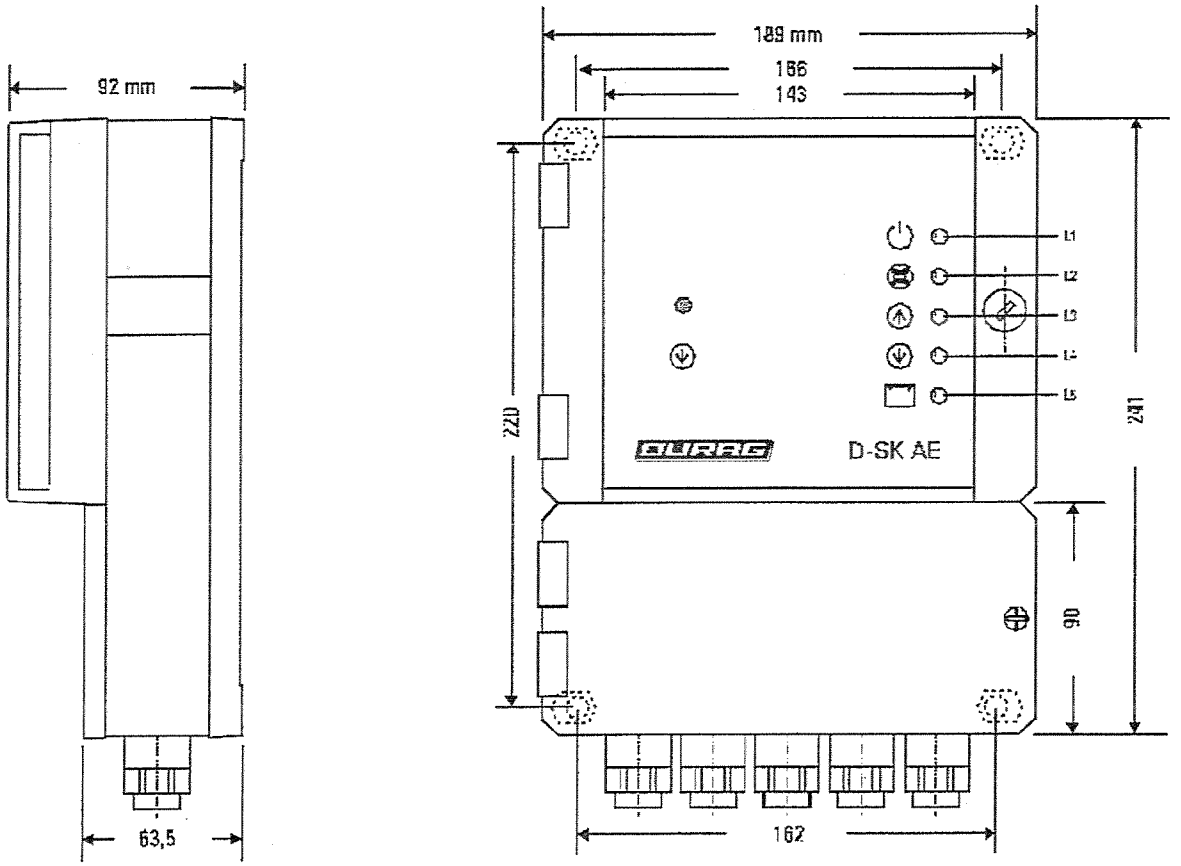

(Fig. 9.2) Dimensions (in mm) of control electronics D-SK AE

9.2. Installation

A D-SK 290 fail-safe shutter system is mounted on the transceiver and/or the reflector flanges, each with its own D-SK AE control electronics. The shutter can be mounted in any orientation so long as there is no interference with the weather hood or any obstructions near the installation flange. The D-SK AE control electronics are connected to the fail-safe shutter with a six conductor cable. This connection should be made after the monitor has been mounted to make sure the shutter can not open or close while it is being installed.

The air current sensor (F2) should also be connected to the purge air flange and then to the D-SK AE controller. The F2 sensor is threaded into the purge air duct with the red dot pointing towards the air flow and secured with a lock nut. This sensor will detect a failure of the purge air system. The cable (six feet are provided at no charge, additional cable is available) that runs to the fail-safe shutter can be as long as 150 feet (the air flow sensor cable has 3 wires including the shielding).

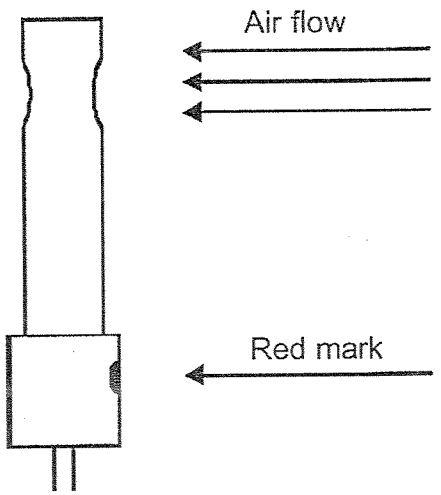

The air current sensor should be mounted on the system after removing the cover (PG7). The sensor should be positioned at the monitor opening such that the air current flows directly through the hole in the sensor. The red mark is meant to aid in mounting and should face away from the monitor in the direction of the air current.

(Fig. 9.3) Air Flow Sensor

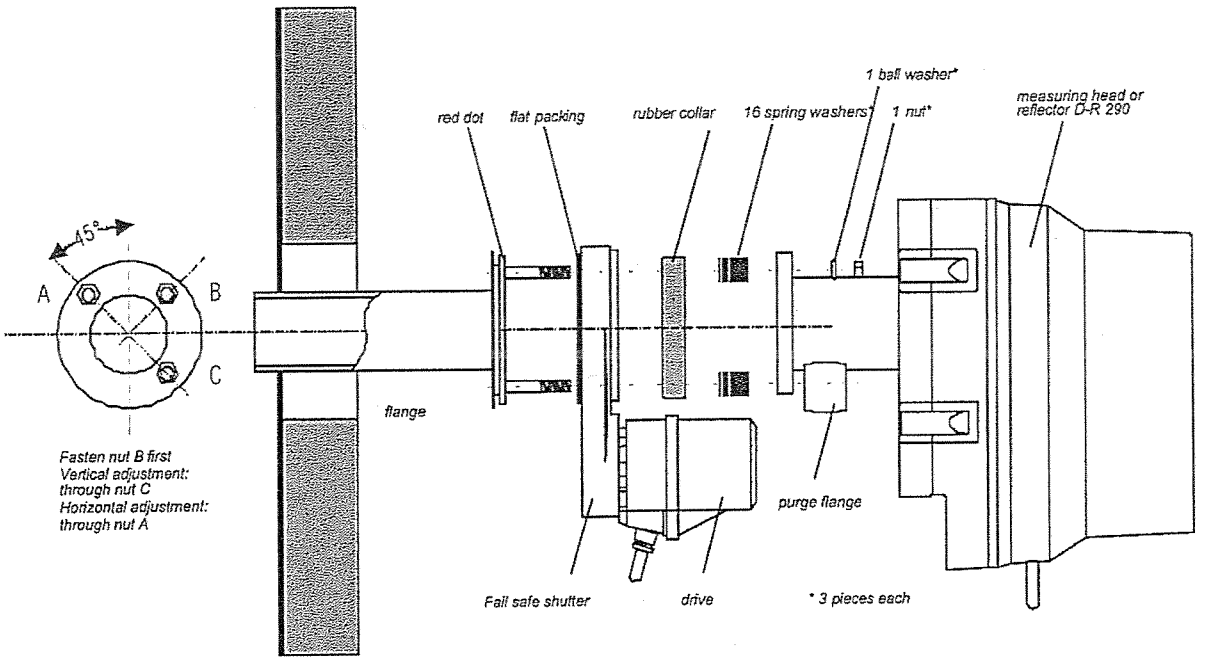

(Fig. 9.4) D-SK 290 Mounting

Warning!

Do not insert fingers into the fail-safe shutter system. Serious injury may result! Disconnect the unit by opening the connection at terminals 16 and 17 before conducting maintenance work on the D-SK AE.

9.3. Electrical Connection D-SK AE

The electrical connection to the fail-safe shutter uses a 20-pin terminal strip in the connection box of the D-SK AE as shown in the diagram below:

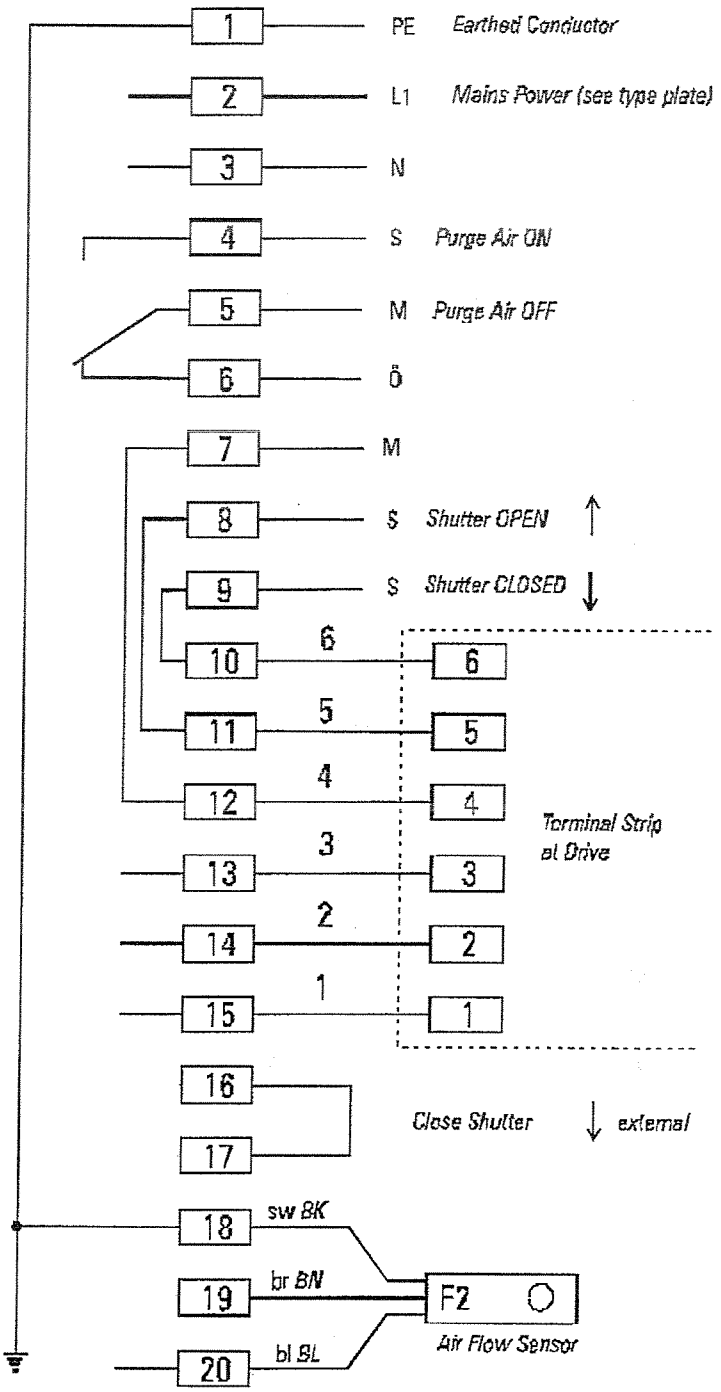

(Fig. 9.5) Electrical Connection for the D-SK AE

9.3.1 Automatic check of shutter operation

The purge air system is very reliable so the shutter should not have to close very often. This however can create another problem. If the shutter has been open for several years, the shutter could be dirty or corroded and may not close when required. To prevent this from occurring the DR 290 has been designed to allow for the check of the operation of shutter every day. To activate this feature, the display unit (either the D-R 290 AZ or D-R 290 AW, whichever is connected to the transceiver) will need to have S1 and/or S2 as appropriate on the No. 40 board in the "ON" position. During the upscale calibration point check portion of the calibration cycle, relay output 3 (and 4 if there are 2 shutters installed) will close for approximately one minute. For the display unit to receive confirmation that the shutter(s) actually closed, the shutter electronics (D-SK AE) will provide a contact closure from terminals 7 and 9. This contact will be connected to digital input 5 for the first shutter and digital input 6 for the second shutter on the display unit.

Switch S1 In the "ON" position in the No. 40 board in the DR 290 AZ (or AW), this switch activates relay output 3, and for the confirmation signal will be read by digital input 5 and will give the associated fault signal (ERROR 500).

Switch S2 In the "ON" position in the No. 40 board in the DR 290 AZ (or AW), this switch activates relay output 4, and for the confirmation signal will be read by digital input 6 and will give the associated fault signal (ERROR 600).

During the reference point check, the D-SK 290 fail-safe shutter is closed by the relay output (contact opens). If the confirmation signal (shutter CLOSED), is not sent within approximately 2.5 seconds, the first line of the LC display will alternate between the current SPAN CHECK display and the error message (ERROR 500 or 600), and the LED on the "STO" key will begin blinking. After a 10 second delay, the fault relay output will signal the error.

D-SK AE 1			D-R 290 AZ display unit Connection block housing	
Function	Terminal		Terminal	Function
Shutter status	7	------->	36	Input 5 ← Error 500 (1 D-SK)
(open or closed)	9	------->	16	
Close or open	16	<-------	29	Relay 3 output switch
The shutter	17	<-------	9	For the fail-safe shutter #1 D-SK 290
D-SK AE 2				
Function	Terminal		Terminal	Function
Shutter status	7	------->	35	Input 6 ← Error 600 (2 D-SK)
(open or closed)	9	------->	15	
Close or open	16	<-------	28	Relay 4 output switch
The shutter	17	<-------	8	For the fail-safe shutter #2 D-SK 290

(Fig. 9.6) Electrical connection between the D-R 290 AZ and the fail-safe shutter

9.4 Shutter Operation

When starting the system, the battery charge level should be checked. The battery charge will be indicated on the red *"battery charging LED"* (L5) on the front panel. The LED will remain lit by rapid charging and will blink during normal charging (indicating that the batteries are charged). When the batteries are strongly depleted, a slow normal charging will occur first (with the LED blinking). When the batteries have reached a minimal charge level, the rapid charging procedure will begin.

If necessary the batteries can be charged before the first system start-up. To do so, connect the D-SK AE controller to the power supply before connecting it to the fail-safe shutters. The shutter motor is driven from the NI-Cad battery pack. The shutter motor draws more power than the Ni-Cad charging circuit supplies. If the shutter controller has sat for a long time without power the batteries may be too low to power the shutter motor. If this occurs, remove the 6 wires going to the shutter motor from the D-SK AE terminal strip. Let the batteries charge for at leas 2 hours and then re-connect the 6 wires for the shutter motor.

Normally the shutters will function fine as delivered. However in cases where the stack pressure is negative (more air drawn through the purge air system) or when the stack pressure is high (less air through the purge air system), it may be required to adjust the point at where the shutter opens and closes. To set the potentiometers, open the latch on the right side of the housing with a screwdriver. The housing can then be opened and the 2 potentiometers should be visible.

The "air flow" potentiometers (P1) and the "hysteresis" potentiometer (P2) are set to a minimum (turn potentiometers clockwise).

Once power is supplied, the unit is ready for operation. The yellow "stand-by" LED (L1) and red "close shutter" LED (L4) light up.

If the purge air unit is running, the "air flow" potentiometer (P1) should slowly be turned counter-clockwise until the green "air flow" LED (L2) lights up. The adjustment is completed by turning the potentiometer half a turn counter-clockwise beyond this switching point. The green "open shutter" LED (L3) lights up and the shutter is automatically moved to the "OPEN" position.

The switch hysteresis is set using the "hysteresis" potentiometer (P2) such that erratic switching is avoided, but without making the switch hysteresis too great.

After settings have been made the housing is closed and latched. The proper function of the fail-safe shutters may be checked by briefly shutting off the purge air supply or detaching the purge air hose. A delay period for the closing of the shutter is necessary, since the air flow sensor will only detect an absence of purge air after a short time period.

10. Technical Specifications

10.1 Technical Specifications: D-R 290

Measuring range for a three foot (one Meter) long measuring path:	From 0-0.08 to 0-1.75 grains/ft^3 (0-200 mg/m^3 to 0-4000mg/m^3)
Light source:	Super Wide Band Diode (SWBD)
Measuring range	
Extinction:	0,1 - 1,6 Ext.
Opacity:	0-20 to 0-100%
	Measuring ranges can be switched
Measurement path length:	3-46 ft (1 - 14m)
Output signal:	2 x 0 - 20mA, Low scale value 4mA
Maximal load:	500 Ohm
Relay outputs:	6 x Status, potential free (limit value, error, control cycle, etc.)
Maximal switch capacity:	250V, 100VA
Inputs:	6x Status (Data entry enable, purge air error, 2x switch measurement range, control cycle)
Output signal integration time:	5 - 1800s, each output independently set in 1 s - increments
Ambient temperature:	-40° to 122°F (-40°C to +50°C)
Stack gas temperature:	above the dew point
Enclosure rating:	NEMA 4x (IP65)
Weight	
Transceiver:	approx. 22 lbs (10 kg)
Reflector:	approx. 15 lbs (7 kg)
Electrical Specifications:	
Power supply:	90 - 264V, 48 - 62Hz
Power:	approx. 30W

10.2 Technical Specifications for the Purge Air Blower

Supply voltage:	115/230V, 50/60Hz,	Other voltages and frequencies available upon request
Power consumption:	5.0/2.5 amps for ½HP	
	8.6/4.3 amps for 1 HP	
Air flow at 0 backpressure:	56 cfm (1/2 HP), 98 cfm (1 HP)	
Weight:	27 lb (1/2 HP), 51 lb (1 HP)	

10.3 Technical Specifications for the D-SK AE Electronics

Power supply ———— :	115 / 230 Volt ± 10% 48 / 62 Hz
Fuse ———— :	0.1 A, slow blow
Power———— :	approx. 10 VA
Motor driver ———— :	24 Volt DC
Enclosure rating ———— :	IP 65 DIN 40050 (NEMA 4X)
Weight ———— :	approx. 7.75 lbs (3.5 kg)

Contacts:
1 contact shutter "closed",
1 contact shutter "open",
1 contact switch " purge air " present / failure

All contacts are potential-free, max. 250 Volt 100 VA switch capacity with resistive load.

Display messages:
5 Display-LEDs for the messages:
" Stand by ",
" Purge air present ",
" Shutter open ",
" Shutter closed "
" Battery charge status " –this LED is lit constantly when the batteries are charging rapidly and blinks during a normal slow charge.

Sensitivity:

Adjustable, minimum approximately 16.5 ft/s (5 m/s) air flow velocity

10.4 Technical Specifications for the D-SK 290 MA Mechanics

Driver ———— :	24 Volt DC driver with built-in motor overload switch.
Torque———— :	8 Nm
Run time ———— :	approx. 2 seconds from open to closed
Shutter———— :	Stainless steel 1.4571
Housing ———— :	Aluminum
Enclosure rating ———— :	NEMA 4x (IP 65) DIN 40050
Weight ———— :	Approx. 10 lbs (4.5 kg)

DURAG

D-R 290
Service Manual

DURAG, Inc. 1355 Mendota Heights Road, Suite 200
Mendota Heights, MN 55120 · Tel. 651-451-1710 · Fax 651-457-7684

Contents

1 D-R 290 AW Controller 1
1.1 Key Function 1
1.2 Saving / DataEntry 1
1.3 Error Messages 2
2 Switch Functions in the AW and AZ 3
2.1 Switches on the D -R 290 AW No. 30 Circuit Board 3
2.2 Switches on the D -R290AW and AZ No. 40 Circuit Board 4
2.3 LCD Display During a Clear Path Calibration 4
3 Transceiver 8
3.1 Optical alignment 8
3.2 Basic Adjustment of the Transceiver (Call Durag, Inc first) 9
3.3 Offset Calibration (Call Durag, Inc first) 11
3.4 Setting the Light Intensity of the Internal Zero Point Reflector 12
3.5 Clear path procedure 14
3.6 Manual calibration of the internal zero point (Window Check) 15
3.7 Manual Calibration of the External Zero Point (Call Durag, Inc first) 15
3.8 Checking the linearity on the path length (EPA filter audit) 16
3.9 Filter audits in the control mode 17
3.10 Testing the reference filters 18
3.11 EPA filter audit test (linearity calibration) {Call Durag. Inc first} 18
3.12 Transceiver Head Switch Functions 20
3.13 Changing the EPROM's 21
3.14 Test function (Switch S6) 22
4 Circuit Board Installation 23
4.1 Installing a new D -R 290 MK No. 20 board 23
4.2 Changing the EPROM (D-R 290 MK controller) (Call Durag, Inc. first) 23
4.3 Changing the LED 24
5 Plug X 1 Wiring Plan 24
6 Plug X4 Wiring Plan 25
7 Recommended Spare Parts 26
8 Schematics 27
9 Notes 36

Figures

(Fig. 1) Display 4
(Fig. 3) Mounting on the adjustment flange 8
(Fig. 4) Internal Zero Point Reflector 13
(Fig. 5) EPA – Test filter 17
(Fig. 7) Location of Switches in the Transceiver Head 19

Document	:	man_dsr290_de3007.doc
Author	:	Günter Müller
Version	:	07 / 2001
Printed	:	05.09.03

1 D-R 290 AW Controller

1.1 Key Function

Key STO — Puts the system into the "*data entry*" (save values) mode.
The LEDs on the "STO" and "MOD" keys will light in this mode. The Led on the "STO" key will blink to indicate a fault.

Key MOD — Puts the system into "*display parameters*" mode
The LED on the "MOD" key will light in this mode.

Key + — When the system is in the "*display measurements*" mode, this key will toggle between outputs 1 and 2. The LED on the "MOD" key will not be lit.
When the system is in the "*display parameters*" mode, this key will move to the next display screen. The LED on the "MOD" key will light.
In the "*data entry*" mode, this key will increase the value of the blinking digit by one. The "STO" and "MOD" keys will light.

Key ← — This key changes the position on the blinking cursor in the display. This key is only active in the "*data entry*". The "STO" and "MOD" keys will light.

If the cursor and the plus keys are pressed simultaneously for about five seconds, a calibration cycle will start.

1.2 Saving / DataEntry

The D-R 290 AW controller has a status relay input to enable data entry/ saving value: Plug 2, contacts 2 D - 2 Z = Terminals 20 - 40.
Open: Data entry disabled, closed: data entry enabled

1. Pressing the "MOD" key switches from the "*Measurement*" mode into the "*Display Parameters*" mode. Once in measurement, the LED on the "MOD" key will light.
2. Press the "+" key until the desired value appears in the display.
3. Pressing the "STO" key will put the system into "*Data entry*" mode. The LED on the "STO" will light.
4. The value of the digit blinking in the display will increase as long as the "+" key is pressed. Once "9" has been reached, "0" will reappear. The " ← " key will move the blinking cursor one digit to the left. Once the left-most digit is selected, pressing the key again will move the cursor back to the farthest right digit.
5. To save the newly entered values and return to the "display parameters" mode, press the "STO" key. The LED on the "STO" key will go out..

6. In the "*display parameters*" mode, pressing the "MOD" key will toggle the system back to the "measurement (display measurements)" mode. The light on the "MOD" key will go out and the current measured value will be displayed. However, if the "MOD" key is pressed while in "*data entry*" mode, the system will return to "*measurement*" mode without saving any changes.

7. Once all changes have been made in "*data entry*" mode and saved, close the terminals below to disable new data entries

   Plug 2, Contacts 2 D - 2 Z = Terminals 20 - 40.

1.3 Error Messages

If a fault is detected, the top line of the LCD display will alternate between the current measured value and the error message. The LED on the STO key will also blink. After an approximately 10 seconds, an error message will be signaled on relay output 5. For fatal errors, a fault will also be signaled on relay output 6.

Errors 100 through 700 are specific to the D-R 290 AZ display.

ERROR	LCD-Display	R6	R5
Communication error	ERROR 000	X	X
Window contamination too high	ERROR 001		X
External AW error 1	ERROR 002		X
External AW error 2	ERROR 003		X
EEPROM fault	ERROR 004		X
RAM fault	ERROR 005	X	X
PROM fault	ERROR 006	X	X
AW system fault	ERROR 007	X	X
Comparison normal error	ERROR 010		X
External zero fault	ERROR 020		X
Internal zero fault	ERROR 030		X
Stepper motor failure	ERROR 040	X	X
LED fault	ERROR 050	X	X
Heated exit window fault	ERROR 060		X
MK system fault	ERROR 070	X	X
AZ input 1 fault	ERROR 100		X
AZ input 2 fault	ERROR 200		X
AZ input 3 fault	ERROR 300		X
AZ input 4 fault	ERROR 400		X
AZ input 5 fault	ERROR 500		X
AZ input 6 fault	ERROR 600		X
AZ system fault	ERROR 700	X	X

2 Switch Functions in the AW and AZ

By default, all switches are shipped in the ON position (towards back of unit).

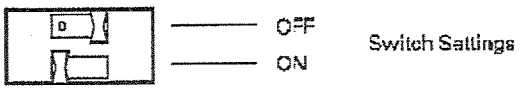

2.1 Switches on the D-R 290 AW No. 30 Circuit Board

Switch	ON	OFF	Function D-R 290 AW / D-R 290 AZ	D-R 290 AZ
S1	X		Watchdog Timer **ON**	
S2		X	Operate with D-R 290 AZ	N/A
S3		X	**TEST STEP # 16** Current to 20 mA at P1 + P2	
S4		X	Show amplification and LED-Current	
S5		X	System Status-> load	N/A

Switch S1:

OFF Position: The watchdog timer is turned off.
ON Position: The watchdog timer is turned on.

Switch S2:

If the D-R 290 monitor is installed with the D-R 290 AZ display, switch S2 in the D-R 290AW must be in the OFF position (pushed forward).

Switch S3:

For checking or calibrating the signal outputs, switch S3 should be in the OFF position. The LCD display will read **TEST STEP #16** (20 mA). Outputs 1 and 2 can be set to 20 mA using potentiometers P1 and P2 if needed.

Switch S4:

The LED amplification and current will be shown in the LCD display if switch S4 is in the OFF position. For maintenance purposes, the current measured value can also be displayed.

Switch S5:

If switch S5 is in the OFF position and status relay input 1 is closed (enable data entry mode) when the system is powered up, the factory default settings for the AW unit will be loaded and overwrite all parameters. The display will read **System Status ->.**

2.2 *Switches on the D-R290AW and AZ No. 40 Circuit Board*

Switch	ON	OFF	Function
S1	X		Relay 3 will be used for controlling the transceiver sideD-SK 290 fail-safe shutter.
S2	X		Relay 4 will be used for controlling the reflector sideD-SK 290 fail-safe shutter.

Switches S1: / S2:

It is possible to automatically test the function of the D-SK 290 fail-safe shutters during the span phase of the calibration cycle. To enable this feature, both S1 and S2 should be in the ON (pushed towards back of unit) position.

If the system installation includes the **D-R 290 AZ** display, this automatic fail-safe shutter test cannot be initiated by the D-R 290 AW controller but will be controlled by the D-R 290 AZ if S1 and S2 are switched on in the D-R 290AZ No. 40 board.

2.3 *LCD Display During a Clear Path Calibration*

Segment 1 + 2: Current calibration function:
LED INT. CALIB the comparison beam is set.
ZERO POINT CALIB the internal zero is set.
SPAN CALIB the reference value is set.
ZERO EXT. CALIB the external zero value is set.

Segment 3: Displays the amplification (10- 255), depending on the calibration function and the path length.

Segment 4: LED –current (0 to 4095). A current of 4000 corresponds to an LED – pulse rate of approx. 100 mA.

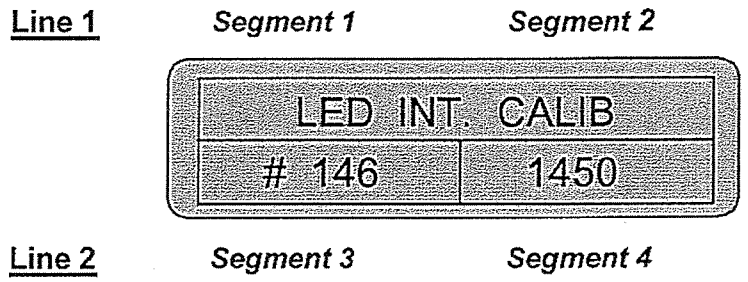

(Fig. 1) Display

Control unit D-R 290 AW		Only for Use with D-R 290 AW in wall mount housing No D-R 290 AZ is used						
Terminal	**Name**	**Function**						
PE	Ground	Power supply 90 - 264 Volt						
N	Neutral							
L	Line							
40	Digital Input 1	Programming Enable						
20								
39	Digital Input 2	Start Cal Cycle						
19								
38	Digital Input 3	Set up Mode 0x- External Error 002						
18		Set up Mode 6x Zero Check						
37	Digital Input 4	Set up Mode 0x- Range 2 for Analog Out 1						
17		Set up Mode 6x Window Check						
36	Digital Input 5	Set up Mode 0x- Range 2 for Analog Out 2						
16		Set up Mode 6x Upscale Calibration Check						
35	Digital Input 6	Set up Mode 0x- External Error 003						
15		Set up Mode 6x Display Stack Factor						
34	Relay 6	NO	Measuring relay, energized when measuring.					
14		Commo	Fault, in cal, or power off					
33		NC	Relay is de-energized					
13	Relay 5	NO						
32		Commo	Warning energizes relay					
12		NC						
Relays 1-4 Function Determined by set-up		0x	1x	2x	3x	4x	5x	6x
31	Relay 1	None	Limit 1 Analog1	Limit 1 Analog2	Limit 1 Analog1	Zero Check	Zero Check	Zero Check
11								
30	Relay 2	None	Limit 2 Analog1	Limit 2 Analog2	Limit 2 Analog2	Window check	Window check	Window check
10								
29	Relay 3	D-SK 1	D-SK 1	D-SK 1	D-SK 1	Upscale check	Upscale check	Upscale check
9								
28	Relay 4	D-SK 2	D-SK 2	D-SK 2	D-SK 2	Stack Factor	D-SK 1	Stack Factor
8								
27	RS 422 Link	**Note:** When using D-R 290 AW without D-R 290 AZ Terminals 6 and7 must be connected with a jumper and Terminals 26 and27 must be connected with a jumper to Complete the RS 422 communication to the transceiver						
7								
26								
6								
4	Analog out 2	plus	4 – 20 ma, 2nd Normally not connected			Data on analog Outputs (opacity, optical density, calibration results) is also Function of the Set-up Mode See table 2C		
5		minus						
24	Analog out 2	plus	4 – 20 ma, 1st termination					
25		minus						
2	Analog out 1	plus	4 – 20 ma, 2nd Normally not connected					
3		minus						
22	Analog out 1	plus	4 – 20 ma, 1st termination					
23		minus						
1		PE (Ground)						

Fig. 2a Optional wiring diagram. For D-R 290 AW installed in D-R 290 AG wall mount housing. D-R 290 AW is connected directly to transceiver. No D-R 290 AZ is used.

Control unit D-R 290 AW		For use when D-R 290 AW is connected to D-R 290 AZ							
Plug	**Terminal**	**Name**	**Function**						
Plug 2	32 D Z	Ground	Power supply 90 - 264 Volt						
Plug 2	28 D Z	Neutral							
Plug 2	30 D Z	Line							
Plug 2	2 D	Digital Input 1	Programming Enable						
Plug 2	2 Z								
Plug 2	4 D	Digital Input 2	Start Cal Cycle						
Plug 2	4 Z								
Plug 2	6 D	Digital Input 3	Set up Mode 0x-5x	External Error 002					
Plug 2	6 Z		Set up Mode 6x	Zero Check					
Plug 2	8 D	Digital Input 4	Set up Mode 0x-5x	Range 2 for Analog Out 1					
Plug 2	8 Z		Set up Mode 6x	Window Check					
Plug 2	10 D	Digital Input 5	Set up Mode 0x-5x	Range 2 for Analog Out 2					
Plug 2	10 Z		Set up Mode 6x	Upscale Calibration Check					
Plug 2	12 D	Digital Input 6	Set up Mode 0x-5x	External Error 003					
Plug 2	12 Z		Set up Mode 6x	Display Stack Factor					
Plug 2	14 D	Relay 6	NO	Measuring relay, energized when measuring					
Plug 2	14 Z		Common	(If in Fault, in cal, or power off					
Plug 2	16 D		NC	Relay is de-energized)					
Plug 2	16 Z	Relay 5	NO	Warning energizes relay					
Plug 2	18 D		Common						
Plug 2	18 Z		NC						
Relays 1-4 Function by set-up mode			0x	1x	2x	3x	4x	5x	6x
Plug 2	20 D	Relay 1	None	Limit 1 Analog1	Limit 1 Analog2	Limit 1 Analog1	Zero Check	Zero Check	Zero Check
Plug 2	20 Z								
Plug 2	22 D	Relay 2	None	Limit 2 Analog1	Limit 2 Analog2	Limit 2 Analog2	Window check	Window check	Window check
Plug 2	22 Z								
Plug 2	24 D	Relay 3	D-SK 1	D-SK 1	D-SK 1	D-SK 1	Upscale check	Upscale check	Upscale check
Plug 2	24 Z								
Plug 2	26 D	Relay 4	D-SK 2	D-SK 2	D-SK 2	D-SK 2	Stack Factor	D-SK 1	Stack Factor
Plug 2	26 Z								
Plug 1	6D	RS 422 Communication	To D-R 290 AZG terminal 6						
Plug 1	6Z		To D-R 290 AZG terminal 26						
Plug 1	8D		To D-R 290 AZG terminal 7						
Plug 1	8Z		To D-R 290 AZG terminal 27						
Plug 1	16 D Z	Analog out 2	plus	4 – 20 ma, 2nd termination	Data on analog Outputs (opacity, optical density, calibration results) is also Function of the Set-up Mode See table 2C				
Plug 1	18 D Z		minus	Normally not connected					
Plug 1	20 D Z	Analog out 2	plus	4 – 20 ma, 1st termination					
Plug 1	22 D Z		minus						
Plug 1	24 D Z	Analog out 1	plus	4 – 20 ma, 2nd termination					
Plug 1	26 D Z		minus	Normally not connected					
Plug 1	28 D Z	Analog out 1	plus	4 – 20 ma, 1st termination					
Plug 1	30 D Z		minus						
Plug 1	32 D Z		? PE shielding for RS 422						

Fig. 2b Standard wiring diagram for D-R 290 AW in panel mount housing when AW is used with D-R 290 AZ .

Opacity: = **OP%**, Extinction: = Optical Density = **OD**

Set-up Mode I/O Function				
Display 1s digit	***Output - 1 Measuring in***	***Output - 2 Measuring in***	***Control cycle on***	
X 0 S	OD	OD	Output-1	
X 1 S	OP%	OD	Output-1	
X 2 S	OD	OP%	Output-1	
X 3 S	OP%	OP%	Output-1	
X 4 S	OD	OD	Output-1 + Output-2	
X 5 S	OP%	OD	Output-1 + Output-2	
X 6 S	OD	OP%	Output-1 + Output-2	
X 7 S	OP%	OP%	Output-1 + Output-2	
Display 10s digit	***Relay 1 Function***	***Relay 2 Function***	***Relay 3 Function***	***Relay 4 Function***
0 X S	X	X	D-SK 1	D-SK 2
1 X S	Limit 1, output 1	Limit 2, output 1	D-SK 1	D-SK 2
2 X S	Limit 1, output 2	Limit 2, output 2	D-SK 1	D-SK 2
3 X S	Limit 1, output 1	Limit 2, output 2	D-SK 1	D-SK 2
4 X S	Zero Check	Window check	Upscale check	Stack Factor
5 X S	Zero Check	Window check	Upscale check	D-SK
6 X S	Zero Check	Window check	Upscale check	Stack Factor

Display 10s digit	***Digital Input 1***	***Digital Input 2***	***Digital Input 3***	***Digital Input 4***	***Digital Input 5***	***Digital Input 6***
0 X S	Enable Programming (close to change parameters)	Start Cal Closed=no cal Open=cal by timer Upon opening =start cal	External Error 002 (Shutter, DP Cell)	Range 2 Output 1 Close to change analog output 1 to range 2	Range 2 Output 2 Close to change analog output 2 to range 2	External Error 003 (Shutter, DP Cell)
1 X S						
2 X S						
3 X S						
4 X S						
5 X S						
6 X S			Zero check	Window	Upscale	Stack factor

Table 2C

3 Transceiver

3.1 *Optical alignment*

1. Set-up Transceiver and Reflector in a dust-free room to the exact measurement path distance. Make sure to provide appropriate allowances for the cone washers and fail-safe shutters. The transceiver and reflector flanges should be as close to parallel as possible. Clean the optical surfaces (exit windows) with a soft, optics-safe cloth.
2. Once the transceiver and reflector are mounted as shown in figure 3 below, tighten down the three nuts on the reflector flange. The three nuts on the transceiver can then be used to optically align the system. Tighten down the nut labeled "B" in figure 3 first. Nut "A" can then be used to change the vertical alignment of the transceiver on the B-C axis. Adjusting the "C" nut will change the transceiver alignment along the A-B, or horizontal, axis. Once the transceiver position is correct, loosen the metal thumb screw on the transceiver optics that secures the position of the focus adjustment. Use the plastic knob to adjust the focus. For path lengths between 1 and 2.25 meters, the monitor is correctly adjusted when the image is the sight is clear. For path lengths greater than 2.25 meters (7 feet), turn the knob to the counter-clockwise until it stops. Once focusing is complete, retighten the metal thumb screw on the optics to secure the focus.

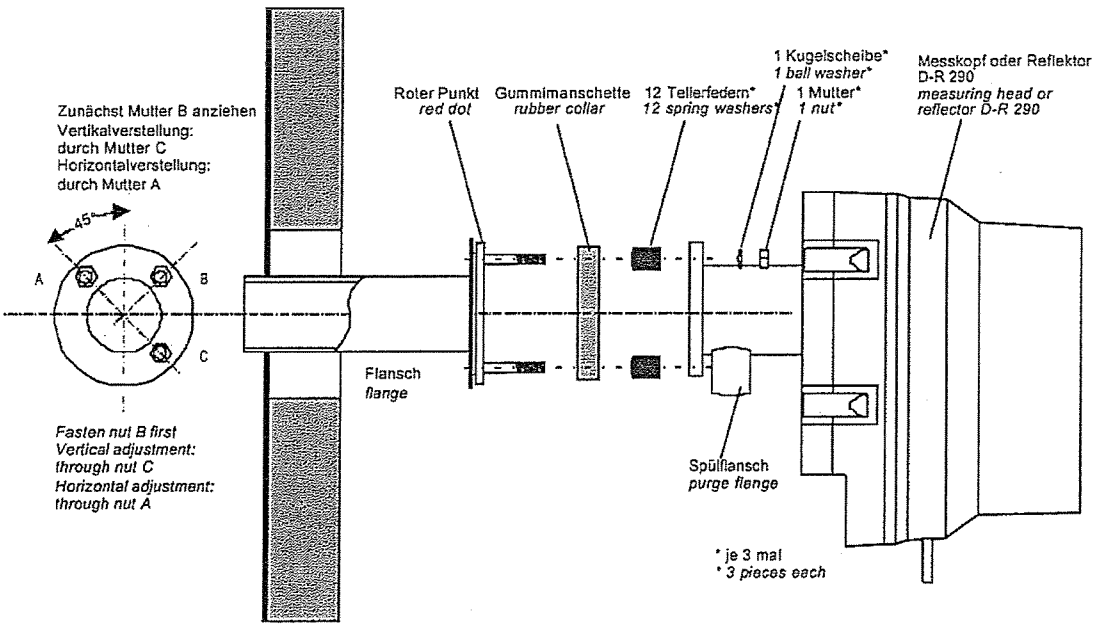

(Fig. 3) Mounting on the adjustment flange

3.2 *Basic Adjustment of the Transceiver (Call Durag, Inc first)*

During basic set-up, the transmitting LED (intensity) is set. Any previously saved values for the system will be erased. A new clear path adjustment will need to be performed after the basic adjustment. Do not perform this procedure unless specifically directed by DURAG.

The basic transceiver set-up should be conducted as follows:

1. Set up the transceiver and reflector in a dust-free room (or use a measuring pipe) to set up the monitor to the maximum range of the reflector. Make sure the flanges on the transceiver and reflector are parallel. Clean the optical surfaces (exit windows) with a soft cloth designed for optics.
2. Next, open the four hasps on the transceiver head and swing it open. With a 4 mm allen wrench, remove the six screws that hold the cover in place. Close the transceiver and latch it shut with the hasps.
3. In the transceiver, push switches **S2** and **S3** into the "ON ↑" position, in the multiple switch **S4**, switch **S4/6** should be in the "OFF ↓" position and the three=position switch **S5** should be in the center (enabling data entry).
4. **Power up** the transceiver and AW controller (Plug St. 1).
5. Line 1 of the LCD display should read: **ZERO EXT. CALIB** .
6. Optically align the transceiver. (See page 8, Optical alignment)
7. Return switches **S2** and **S3** to the lower, OFF ↓ position, then push switch S5 toward the front of the monitor (for calibration cycles) until the yellow LED blinks. Return switch **S5** to the center position; the yellow LED should continue blinking for the rest of the basic set-up procedure. The red LED should be constantly lit, indicating that data entry is enabled. The LED current will be calculated against the external measurement path. The lower line of the LCD display should be working and segment four will display the LED current value. The displayed value should be between 700-1000. A value of4000 corresponds to an LED signal of approximately 100 mA.
8. If **S4/6** on the **S4** switch is returned to the ON ↑ position *before the basic set-up is completed*, any previously recorded filter audit (linearity) data will not be erased.

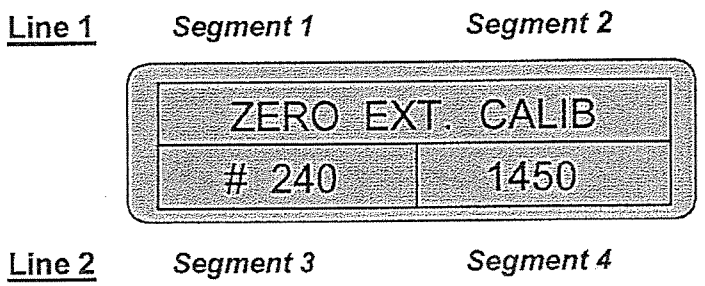

9. After the LED current is set, the monitor will determine the amplification of the comparison normal light beam. The lower line of the display will be active and segment three will show the amplification factor. This should be between 10-50.

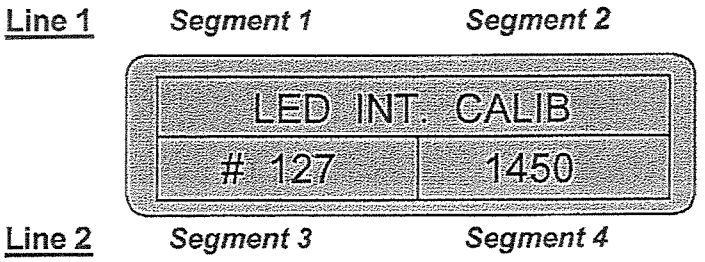

10. After the basic set-up is complete, a calibration cycle will run (the yellow LED will go out). To prevent any further changes to the monitor set-up, put switch **S5** to the back (the red LED will extinguish). On switch **S4** put **S4/6** in the ON ↑ position. If **S4/6** on the **S4** switch was already returned to the ON ↑ position before the basic set-up is completed, any previously recorded filter audit (linearity) data was preserved.

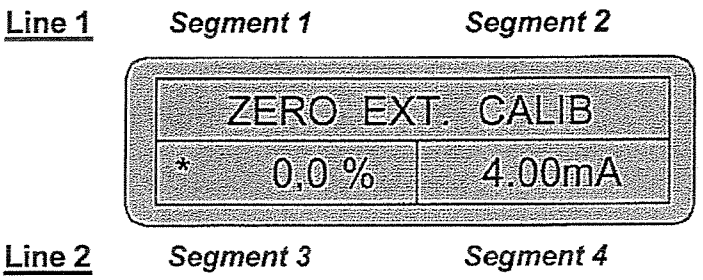

11. Once the basic set-up has been completed (the yellow LED will not be lit), disconnect the transceiver and controller (power off) and replace the cover with the six screws.

3.3 Offset Calibration (Call Durag, Inc first)

After the first basic set-up, the offset calibration must be run.

1. Switch **S2** should be in the ON position and switch **S6** should be in position **1**. The first line of the LCD display should read: **TEST STEP # 01**.
2. Press the **S7** + key (see switch S6 test functions on page 22). This will toggle the transceiver head into comparison mode and the transmitting LED will be turned off. Te first line of the LCD display will alternate between the error message ** **ERROR 50** ** (LED fault) and **TEST STEP # 01**.
3. Use potentiometer P1 to adjust the current at test point **MP 3** to read 20 mV, using capacitor C37 as ground (1000 ì F/ 25 V).

Line 1 *Segment 1* *Segment 2*

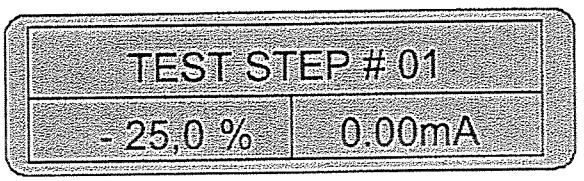

Line 2 *Segment 3* *Segment 4*

4. Put switch **S2** in the OFF position and switch **S6** in the 0 position.
5. Disconnect the transceiver and controller (power off) and **repeat the basic set-up** in page 9.

3.4 Setting the Light Intensity of the Internal Zero Point Reflector

1. The internal zero point reflector must be adjusted so that it reflects the light beam with the same intensity as the D-R 290 R reflector on a dust-free measuring path.
2. Set up the transceiver and reflector in a dust-free room to the exact path length at the installation site. Make sure to calculate the additional distance needed to account for the washers and fail-safe shutters. If the path length at the installation is unknown, use the maximum length for the reflector (2.25 m for reflector 1, 12 m for reflector 2).
3. Open the four hasps on the transceiver head and swing it open. Remove the six 4 mm hex screws and remove the cover. Close the transceiver head and refasten the hasps. Connect the transceiver head and controller (plug St. 1). Once turned on, the D-R 290 will run a self-check and the comparison light beam will be checked. Line 1 of the display should read: **REF. LIGHT CHECK**. After the system automatically sets the LED intensity, the unit can be adjusted (the yellow LED will go out).

Line 1 *Segment 1* *Segment 2*

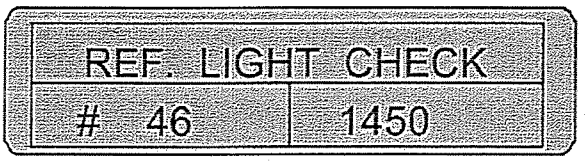

Line 2 *Segment 3* *Segment 4*

4. For this calibration, push switch **S2** on the D-R 290 MK number 20 board into the upper **ON ↑** position, and the service switch **S6** in the test function 4 position. Press the **S8 —** key to bring the reflector into position on a dust-free path (clear-path). Measure the signal at test jack MP.2 (external zero point) to the ground on the C37 (1000 ì F / 25 V) capacitor.
5. Press the **S7 +** key to bring the internal zero reflector into position and measure the voltage at the MP.2 test jack. The internal zero point reflector must be adjusted to have the same light intensity (current) that was measured with the external zero point reflector (max. tolerance: 5).
6. To run he calibration, loosen the ring on the zero point reflector that locks its position (turn to the left). The reflector can be calibrated by rotating the reflector insert. Turning to the right will reduce the light intensity and give a lower current reading. Turning to the left will increase the light intensity and yield a higher current. When the measured signal for the internal zero reflector is the same as the signal measured for the external

reflector, tighten the locking ring on the reflector insert by turning it to the right. ***After you are done with the adjustment return the switches.***

7. Run the clear path calibration procedure from page 12 starting at paragraph 3.

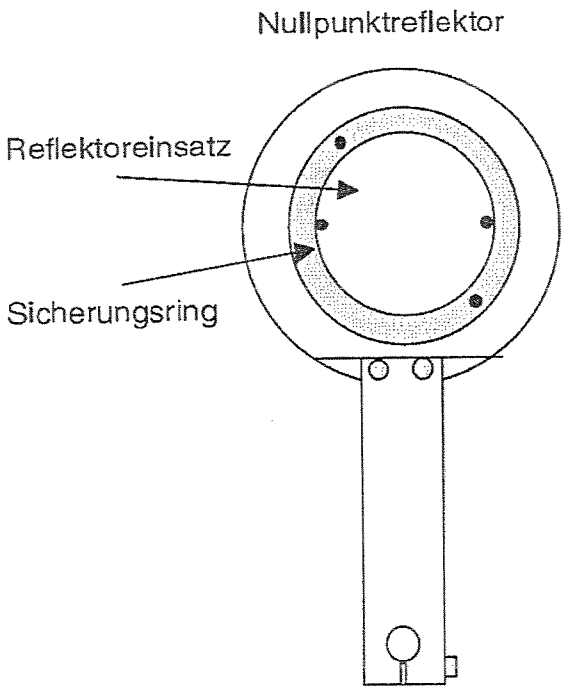

(Fig. 4) Internal Zero Point Reflector

3.5 Clear path procedure

The clear path procedure should be run in the following order:

1. Set up the transceiver and reflector in a dust-free room to the exact path length of the stack where they will be installed. Make sure to include the appropriate allowances for the disk washers and fail-safe shutters. Clean the optical surfaces (exit windows) with a soft, optics-safe cloth.
2. Open the four hasps on the transceiver and swing the housing open. With a 4 mm allen wrench, remove the six screws that secure the cover and remove it from the housing. Swing the transceiver head closed. Supply power (connect plus "St1") to the transceiver and the D-R 290 AW controller. Once turned on, the D-R 290 will run a self-check cycle and check the value of the comparison light beam. The LCD display will read: **REF. LIGHT CHECK** on line 1. Once the automatic start-up has been completed and LED intensity has been set, the system can be calibrated (the yellow LED will go out).

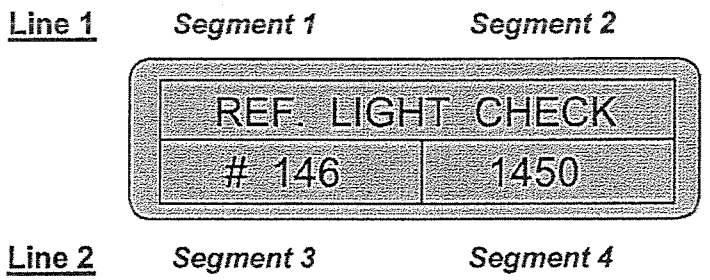

3. Put switches **S2** and **S3** in the upper, "**ON ↑** " position, Display line 1: **ZERO EXT. CALIB** .
4. Optically align the transceiver head.
   (see page 8, Optical alignment)
5. Return switches **S2** and **S3** to the lower, "OFF ↓" position, the press switch **S5** (towards the front of the monitor). Switch **S5** can then be moved back to the center position, at which point the yellow LED should continue blinking and the red LED should be continuously lit. The lower line of the display (on the AW controller) should be working.
6. Display line 1: **LED INT. CALIB** the comparison light beam is calibrated.
7. Display line 1: **ZERO POINT CALIB** the internal zero point value is calibrated.
8. Display line 1: **SPAN CALIB** The reference light path is calibrated.
9. Display line 1: **ZERO EXT. CALIB** the external zero point value is calibrated.
10. After the clear path calibration procedure, the system will run a self-check again, indicated by the blinking of the yellow LED. To allow these new clear path values to be saved, switch **S5** must be pushed back (the red LED will go out).
11. Disconnect the power to the transceiver head and the AW controller. Loosen the 4 hasps on the transceiver head, swing open the transceiver, and replace the lid to the housing, making sure to secure all six screws. The transceiver head can then be closed and the hasps fastened again.
12. Reconnect the transceiver and AW controller (supply power). When the D-R 290 is turned back on, the system will again run a self-check cycle.

3.6 *Manual calibration of the internal zero point (Window Check)*

If the internal zero point value still requires adjustment after the automatic calibration procedure, this calibration can also be initiated manually.

1. Clean the optical surfaces (exit windows) with a soft, optics-safe cloth. Using the "MOD" and "+" keys on the D-R 290 AW controller, select the "Window Check" measurement.
2. On the D-R 290 MK No. 20 board in the D-R 290 MK transceiver, switch **S4/4** on the 6-slot switch block **#4** should be set to the "OFF ↓" position, and switch **S3**, which controls the calibration cycle, should be in the "ON ↑" position. Switch **S5** must be positioned to enable data entry (center position), as indicated when the red LED is lit. The first line of the LCD display should alternate between OFFSET -- + and WINDOW CHECK.
3. With the **S8** [-] key (decrease displayed value) and the **S7** [+] (increase displayed value), the internal zero point can be corrected to 4.0 mA. It is important, however, to ***remember that the internal zero point is calculated over a 10 second integration time.*** Using the S7 and S8 keys briefly best makes this adjustment, and then waiting ten seconds to view the changes after the integration time has passed. If the value is still not correct, repeat this process as necessary. As long as one of these keys is pressed, the yellow LED will light.
4. Once the calibration is complete, return the switches to there default positions: **S5** locked (the red LED goes out), switch **S4/4** on **#4** should be in the ON ↑position. Switch **S3** should be in the OFF ↓ position. Replace the cover and tighten the mounting screws.

3.7 *Manual Calibration of the External Zero Point (Call Durag, Inc first)*

If the external zero point value still requires adjustment after the automatic calibration procedure, this calibration can also be initiated manually.

1. Set up the transceiver and reflector in a dust-free room (or use a measuring pipe between the heads) to the exact path length of the stack where they will be installed. Make sure to include the appropriate allowances for the disk washers and fail-safe shutters. Clean the optical surfaces (exit windows) with a soft, optics-safe cloth. Select a short integration time, such as 8 seconds, on the D-R 290 controller and then choose "External Zero".
2. On the D-R 290 MK No. 20 board in the D-R 290 MK transceiver, switch **S4/5** on the 6-slot switch block **#5** should be set to the "OFF ↓" position, and switch **S3**, which controls the calibration cycle, should be in the "ON ↑" position. Switch **S5** must be positioned to enable data entry, as indicated when the red LED is lit. The first line of the LCD display should alternate between OFFSET - + and OUTPUT X.
3. With the **S8** [-] key (decrease displayed value) and the **S7** [+] key (increase displayed value), the external zero point can be corrected to 4.0 mA. It is important, however, to remember that the external zero point is calculated over an integration time. Using the S7 and S8 keys briefly best makes this adjustment, and then waiting a few seconds to view the changes after the integration time has passed. If the value is still not correct, repeat this process as necessary. As long as one of these keys is pressed, the yellow LED will light.
4. At the end of the calibration, return the switches to their default positions.

3.8 Checking the linearity on the path length (EPA filter audit)

Set the D-R 290 to a short integration time and select the value (external zero point) that will be tested. The display should read **OUTPUT 1**.

Testing according to EPA regulations.

The linearity of measurements in the measurement range from 0-100% with a stack correction factor of 1.000 are tested. A filter holder should be set-up at the midway point of the measurement path angled at less than 10-15°. During testing, the monitor should read within ± 1.5 % of the standard value for the filter. If the linearity needs to be recalibrated, follow the procedure on 18, EPA filter audit test (linearity calibration).

3.9 *Filter audits in the control mode*

Die The control mode also allows for filter audit testing to EPA regulations. The testing should run using the output 1 measuring range. This will measure the OP measuring range with a stack correction factor of 1.

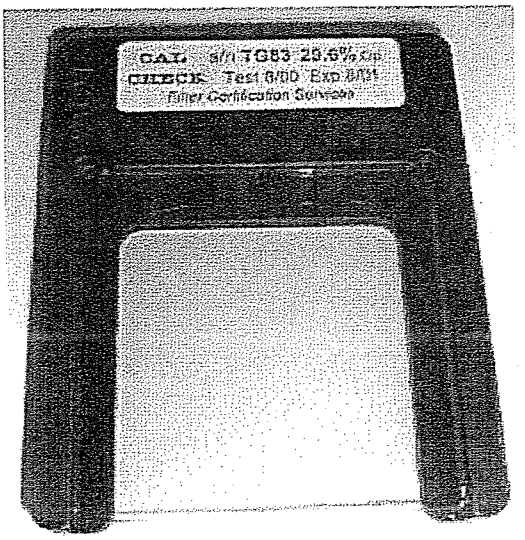

be test

(Fig. 5) EPA – Test filter

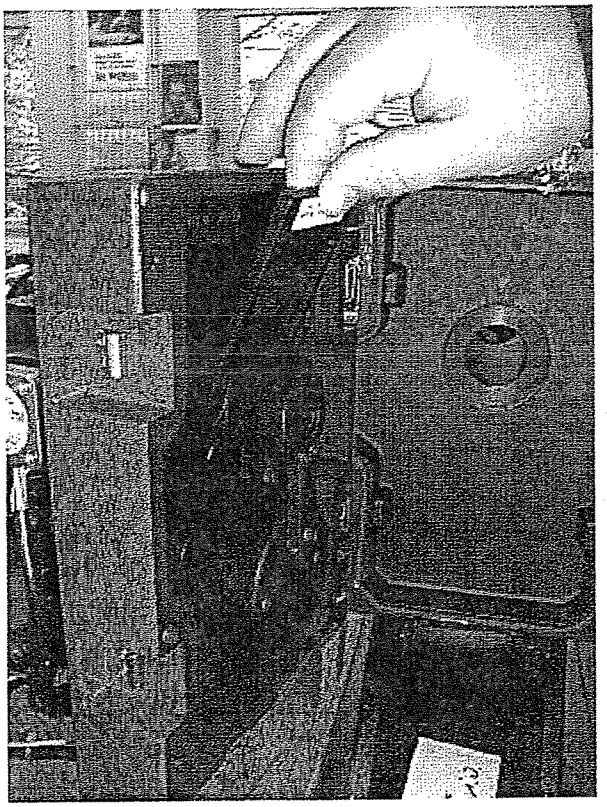

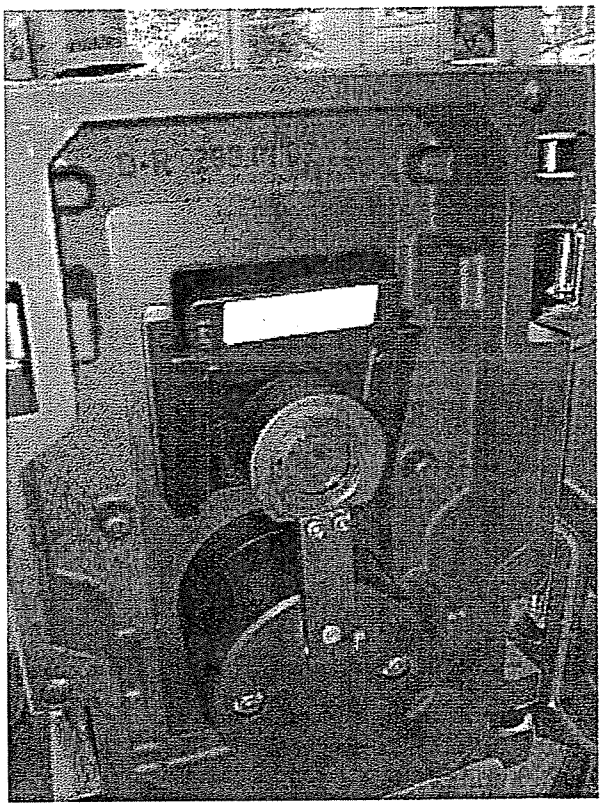

After selecting the control mode (display: **CONTROL MODE**), press the STO key to run a window contamination check and bring the display to 4 mA, if needed. Open the hasps on the transceiver head and swing it open. The unit is now ready for filter audit testing. A special holder has been built into the transceiver to hold the calibration filters, (see illustration above. During testing the, the monitor should read the standard value of the filter within ± 1 %. If these values are not linear, repeat the procedure on 18, EPA filter audit test (linearity calibration).

3.10 Testing the reference filters

Select the span / reference value check, (the display should read **SPAN CHECK**) from the D-R 290 AW controller. If the span value is approximately 71%, this value should be recalibrated, as described on page18, EPA filter audit test (linearity calibration).

3.11 EPA filter audit test (linearity calibration) {Call Durag. Inc first}

Select the desired value on the D-R 290 AW controller. For the linearity calibration for the external zero (OUTPUT X), select a short integration time.

1. After opening the cover of the D-R 290 MK transceiver, put switch **S3** (calibration function) into the ON ↑ position. Switch **S5** must be set to enable data entry and the red LED should be lit to indicate this. On the 6-throw switch **S4**, put the switch for the value to be calibrated into the OFF ↓ position, as indicated in the table below.

S4/1	**OUTPUT X**, (current measured value „ External Zero Point “)
S4/2	**CONTROL MODE**, (EPA filter audit test)
S4/3	**SPAN CHECK**, (Internal Reference Filter)

2. The first line of the display should alternate between **Slope -+** and the value to be adjusted when the measured value is greater than 4.00 mA.

3. With the **S6** [-] (decrease displayed value) and **S7** [+] (increase displayed value) keys, the slope can be corrected to match the value of the test filter. Make sure to allow for the selected integration time to make sure the desired value has been set. Make sure to press the keys briefly then wait out the integration time before pressing the keys again. While the **S6** and **S7** keys are pressed, the yellow LED will light if the measured value is greater than 4.00 mA.

4. After the adjustment, return the switches to orginal default positions: **S5** locked with the red LED extinguished, **S3** in the OFF ↓ position. Replace the cover and tighten the mounting screws. Reset the integration on the D-R 290 AW controller and save the value.

5. Disconnect the transceiver and controller (power down). Open the four hasps on the transceiver head, swing it open, and replace the cover. Close the transceiver and the hasps.

Reconnect the transceiver and controller (and supply power). Once turned on, the D-R 290 will run a control cycle: for 1:30 minutes each, the D-R 290 will determine its internal zero point, window check, and reference point values (displayed in %).

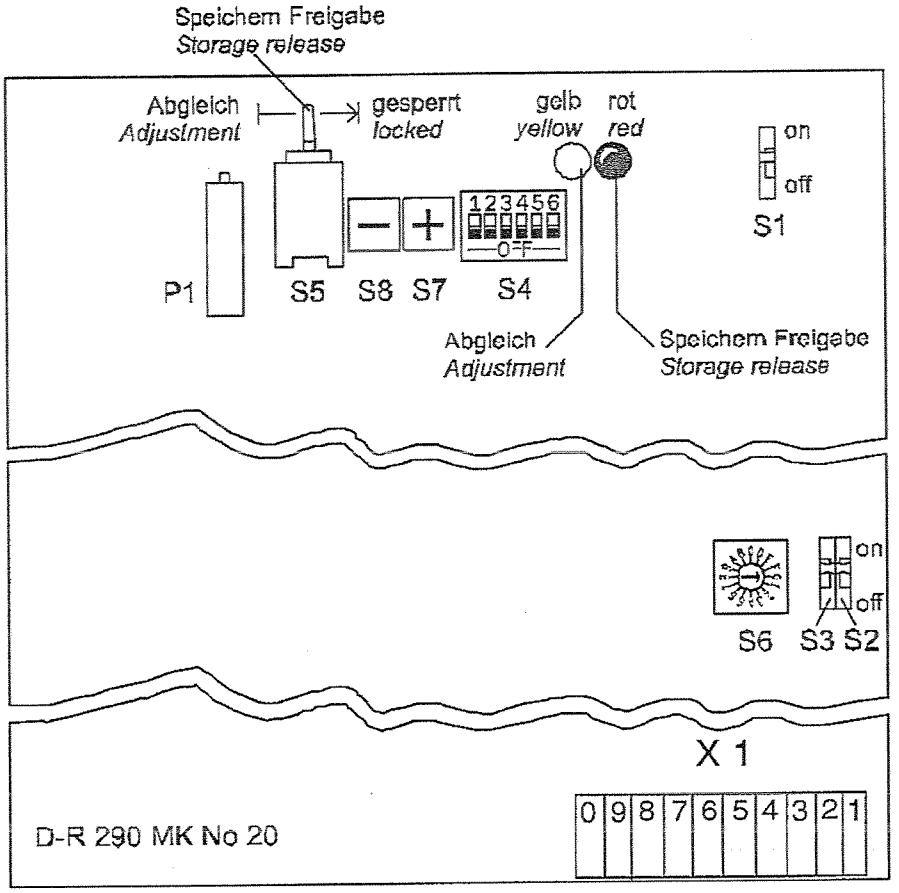

(Fig. 7) Location of Switches in the Transceiver Head

3.12 *Transceiver Head Switch Functions*

Switch S1

ON	OFF	Default Setting
X		Watch Dog Timer **ON**

Switch S2 and S3

	ON	OFF	Function
S2		X	**Default Setting**
S3		X	**Default Setting**
S2	X		Enables a calibration cycle start using switch S5
S3	X		Enables a calibration cycle start using switch S5
S2	X		Enables the use of the service program switch S6
S3	X		Enables the start of a calibration function using switch S4

DIL- Switch S4

S4	ON	OFF	Default settings
6	X		Basic configuration/ calibration disabled
5	X		OFFSET External zero point (measurement)
4	X		OFFSET Internal zero point (Window Check)
3	X		SPAN Slope
2	X		CONTROL MODE Slope
1	X		OUTPUT Slope

Switch S5

Switch S5	Function	
Press switch in:	Start Calibration Cycle	Yellow LED blinks
Center position	Enable data/parameter entry	Red LED is lit
On position	Disable data/parameter entry Default **Setting**	Red LED is not lit

3.13 Changing the EPROM's

D-R 290 AW

After replacing the EPROM chip (IC D6 on the D-R 290 AW number 30 board), the following steps should be taken. Make sure switch **S5** is in the "OFF" position and the status relays (enable programming) are closed (Plug2 2D to 2Z is shorted). When the system is powered up, the default settings will be loaded and saved over any existing parameters. The display should show '**System Status ->**", after which switch **S5** should be returned to the "ON" position. **You will need to reprogram your mode and all the setting on the D-R290AW.**

D-R 290 AZ

If you replace the EPROM chip (IC D6 on the D-R 290 AZ number 30 board) there is no set-up procedure required. Just reinstall the unit and make sure it is working right.

D-R 290 MK

When the EPROM is replaced (IC D9 on the D -R 290 MK number 20 board) a basic adjustment maybe required, this also needs to be done if the number 20 board is replaced with a new board. {**Call Durag, Inc. first** }

After the basic adjustment a clear path and filter audit test will need to be preformed.

3.14 Test function (Switch S6)

To call up the test function, put switch **S2** on the D-R 290 MK No 20 board into the upper ON ↑ position and select the desired test function with service switch **S6** as shown in the table below. Use keys **S8 --** and **S7 +** to initiate the test step.

Watch Dog Timer Test

For test step 09, the watchdog timer must still be active, that is switch **S1** should be in the OFF ↓ position. Pressing **S8 --** or **S7 +** keys will deactivate the watchdog timer so it doesn't trip. The transceiver will restart the program. The program start begins by checking the comparison light beam. The first line of the display will read: **REF. LIGHT CHECK.**

Switch S2	Switch S6	Key " - " S8	Key " + " S7	LCD – Display, Line 1
ON	0			TEST STEP # 00
ON	1	External zero LED ON		TEST STEP # 01
ON	1		Comparison LED OFF	TEST STEP # 01 ERROR 50
ON	2	External zero	Comparison	TEST STEP # 02
ON	3	External zero	Reference value	TEST STEP # 03
ON	4	External zero	Internal zero	TEST STEP # 04
ON	5	Internal zero	Comparison	TEST STEP # 05
ON	6	EE Prom	Test	TEST STEP # 06
ON	7	E Prom	Test	TEST STEP # 07
ON	8		Transceiver fault	TEST STEP # 08 ERROR 70
ON	9	Watchdog	Timer	TEST STEP # 09

4 Circuit Board Installation

4.1 *Installing a new D-R 290 MK No. 20 board*

Disconnect the transceiver and controller from the power supply. Open the four hasps on the transceiver head and swing it open. With a 4 mm Allen wrench, remove the mounting screws that secure the cover and remove it.

1. On the D-R 290 MK No. 20 board, pull plugs X1 through X4 from their sockets.
2. Remove the three screws that secure the circuit board. Put the new circuit board in place and secure it with the three screws.
3. Check the operating voltage. Connect the transceiver and the controller and power them up. Check the voltage at socket **X1**. The tolerance of the 15 Volt line is ±5%, and the tolerance for the +5 Volt current is +5%.
4. Connect the transceiver and controller and connect sockets X1 to X4 with the pins on D-R 290 MK No. 20 board.
5. Power up the transceiver and controller and test the current on the right most pin of the voltage **N1 = +12V**, **N2 = -12V** and **N3 = +5V** (tolerance ± 5 %) against the ground of the C 37 capacitor (1000 ì F / 25 V).

After changing the circuit board, run the following procedure:

6. Basic configuration of the transceiver (see Page9).
7. Offset calibration (see Page11).
8. Set the light intensity of the internal zero point reflector (see Page 12).
9. Clear path calibration procedure (see Page14).
10. Filter audit / linearity test (see Page18).

4.2 *Changing the EPROM (D-R 290 MK controller) (Call Durag, Inc. first)*

After installing a new EPROM chip (IC D9 on the D-R 290 MK number 20 board), the following procedures must be run:

1. Basic transceiver configuration (see Page9).
2. Clear path calibration procedure (see Page14).
3. Linearity calibration / EPA filter audit test (see Page18).

4.3 Changing the LED

Disconnect the DR 290 MK transceiver and the D-R 290 AW control panel (power down). Open the four hasps on the transceiver head and swing it open. With a 4 mm Allen wrench, take out the six screws on the lid and remove it.

1. On the D-R 290 MK number 20 board, pull the 2-pin LED connector (socket X2) from the plug. Unscrew the three setscrews on the LED assembly.
2. Remove the old LED-assembly and put the new one in place (make sure to match the positions of the screws) and tighten all three Allen screws. Reconnect the 2-pin LED connector (socket X2 with the plug on the D-R 290 MK number 20 board.

After changing the LED, the following procedures need to be run:

1. Clear path calibration (see Page 14).
2. EPA filter audit test / linearity (see Page 18).

5 Plug X 1 Wiring Plan

Connection to D-R 290 MK transceiver					
D-R 290 AW Controller		Transceiver cable connections			
Plug	Contact	Plug	Wire Number	X1 Terminals	Function
St. 1	32 D Z	Housing	Shield		Shielding
St. 1	12 D Z	B	1	1	**+ 15 Volt**
St. 1	32 D Z	D	2	**2**	**GND**
St. 1	14 D Z	C	3	**3**	**- 15 Volt**
St. 1	2 D Z	A	4	**4**	**+ 5 Volt**
St. 1	32 D Z	E	yellow / green	**5**	**Earth ground**
St. 1	32 D Z	F	6	**6**	**GND**
St. 1	8 D	J	7	7	RS 422 < --
St. 1	8 Z	H	8	8	RS 422 < --
St. 1	6 D	G	9	9	RS 422 -->
St. 1	6 Z	M	10	10	RS 422 -->

6 Plug X4 Wiring Plan

	Zero point Motor	Plug X 4		Comparison Motor	
	yellow	A 1	B 1	yellow	
	black	A 2	B 2	black	
	green	A 3	B 3	green	
	red	A 4	B 4	red	
	blue	A 5	B 5	blue	
	white	A 6	B 6	white	
Light box output	yellow	A 7	B 7	yellow	Light box output
Light box Ground	black	A 8	B 8	black	Light box ground
Light box + 15 Volt	red	A 9	B 9	red	Light box + 15 Volt
Heated exit window	black	A 10	B 10	black	Heated exit window

7 Recommended Spare Parts

Part Number	Description
	Mounting
	Measuring Head / Reflector
	Super Wide Band Diode
	Main board
	PC board with light barrier
	Photo element with PCB
	Fuse A, per 10 pcs. (mains: 230V)
	Fuse A, per 10 pcs. (mains: 115V)
	Heated Disk
	Internal Zero Point Reflector
	Stepper Motor
	Reflector Insert Type I (1.0 - 2.25 m)
	Reflector Insert Type II (1.75-12.0 m)
	Control Unit
	CPU Board
	Relay Board
	Display / Data Entry
	Internal Back plane
	External Back plane (in wall mount housing)
	Power supply
	Purge Air Unit
	Filter Housing FPG05 7505
	Filter Cartridge P77-5308 for FPG05 7505
wdiluftsch280	Air Hose for blower, price per foot, diam. 50 mm
	Accessories

8 Schematics

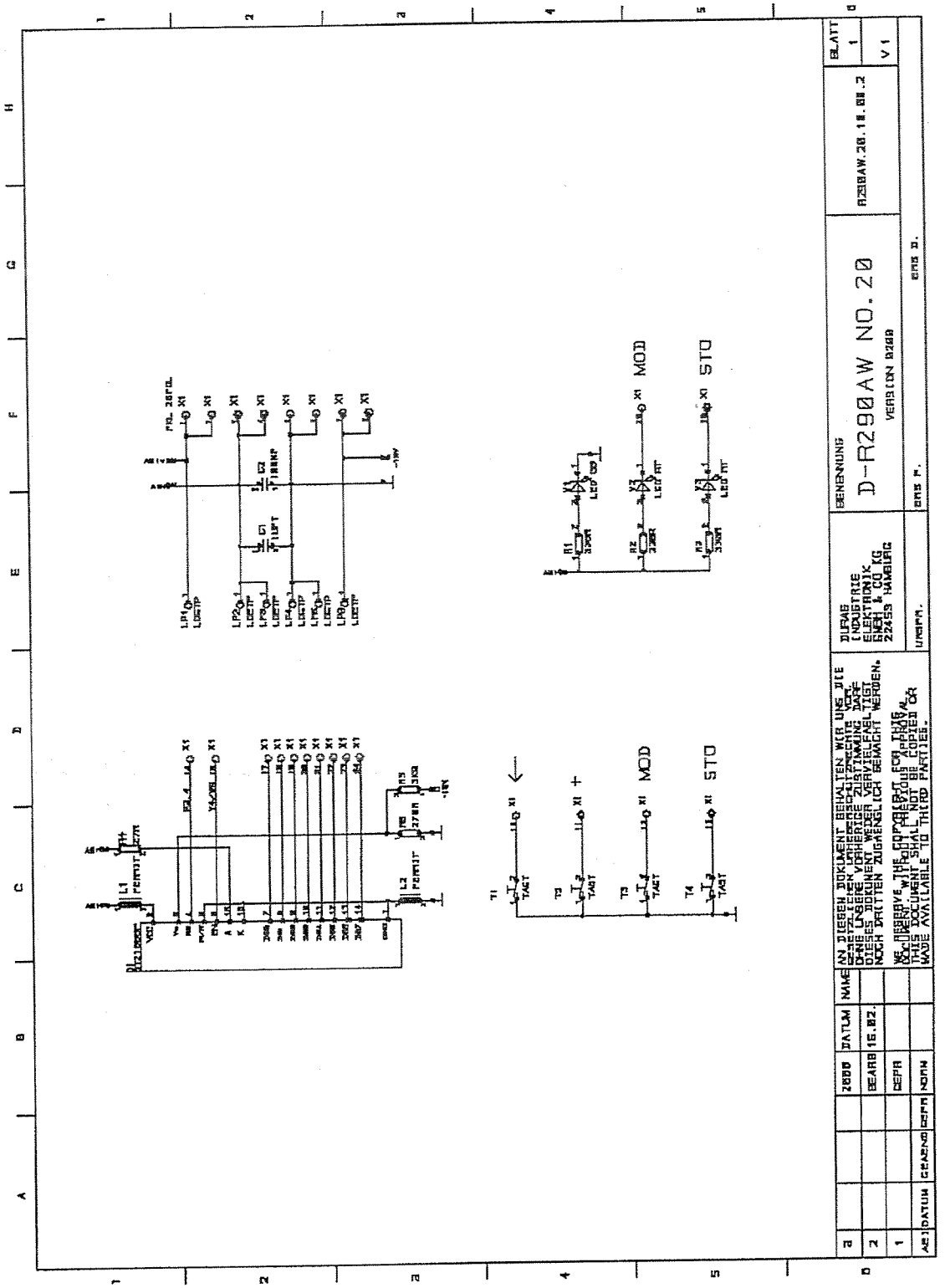

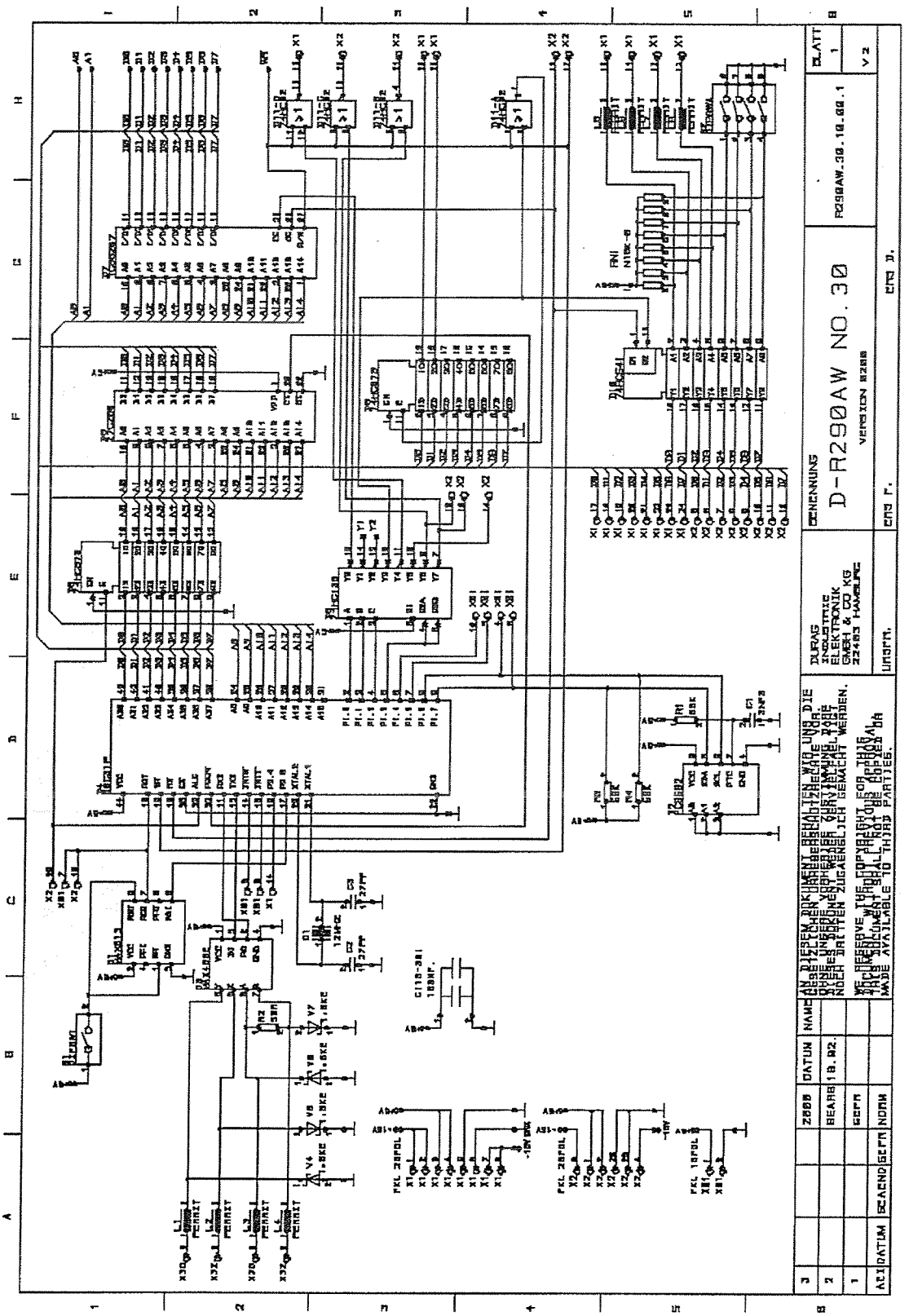
D-R290AW NO. 30
DURAG INDUSTRIE ELEKTRONIK GMBH & CO KG
22453 HAMBURG

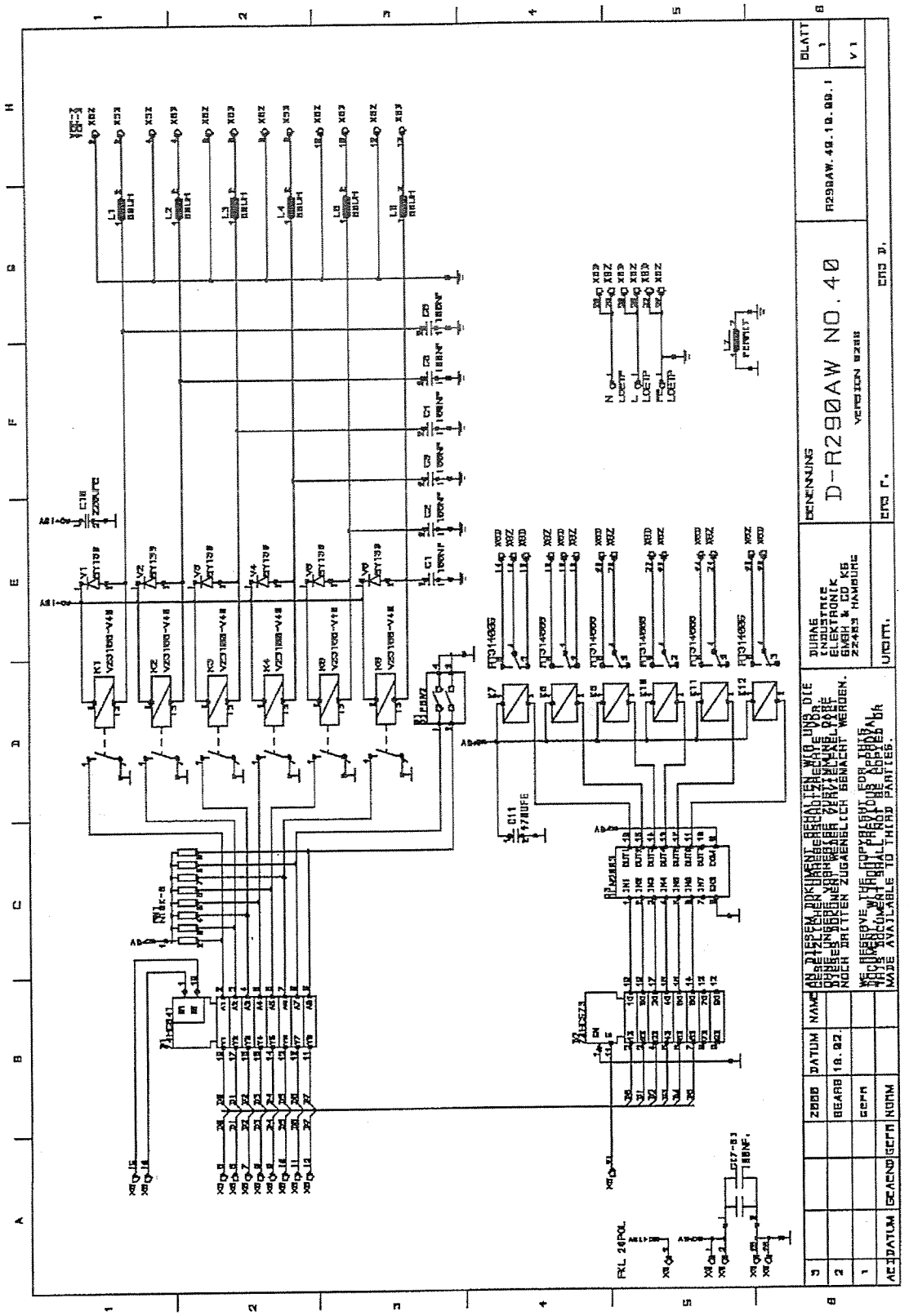
D-R290AW NO. 40
DURAG
INDUSTRIE
ELEKTRONIK
GMBH & CO KG
22453 HAMBURG
R290AW.40.10.00.1
BLATT
1
V1
DATUM
NAME
2000
BEARB
10.02
GEFR
NORM
AEI
DATUM
GEAEND
GEFR
NORM
FKL 24POL

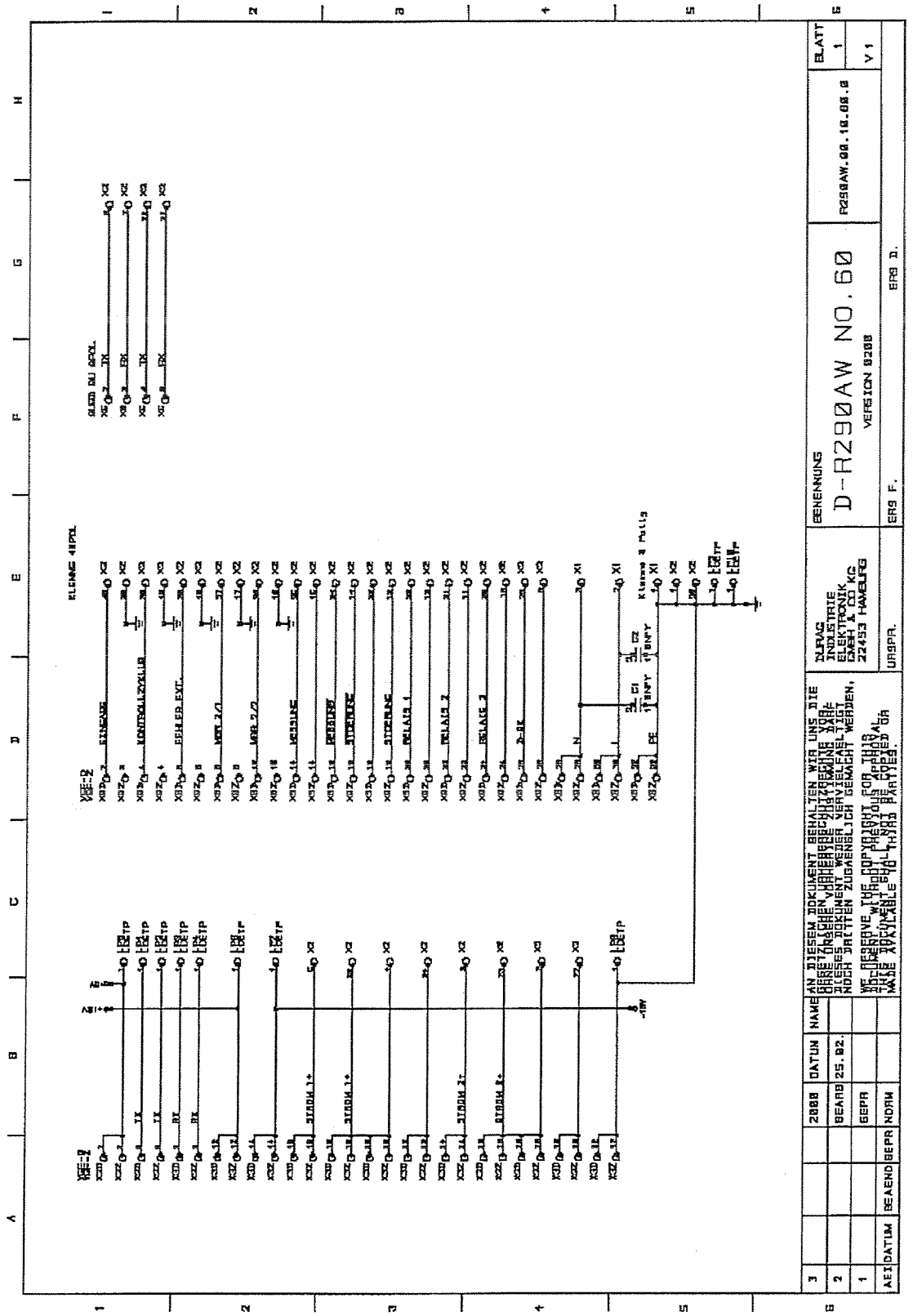
D-R290AW NO.60
VERSION 0200
DURAG
INDUSTRIE
ELEKTRONIK
GMBH & CO KG
22453 HAMBURG
BENENNUNG
R290AW.00.10.00.0
BLATT
1
V1
ERS F.
ERS D.
URSPR.
AN DIESEM DOKUMENT BEHALTEN WIR UNS DIE
GESETZLICHEN VORHERIGE ZUSTIMMUNG DAS
ORNE ONSERE VORHERIGE ZUSTIMMUNG DAS
DIESES DOKUMENT WEDER VERVIELFAELTIGT
NOCH DRITTEN ZUGAENGLICH GEMACHT WERDEN.
WE RESERVE THE COPYRIGHT FOR THIS
DOCUMENT WITHOUT PREVIOUS APPROVAL.
THIS DOCUMENT SHALL NOT BE COPIED OR
MADE AVAILABLE TO THIRD PARTIES.
2000
DATUM
NAME
BEARB
25.02.
GEPR
NORM
AEI
DATUM
BEAEND
GEPR

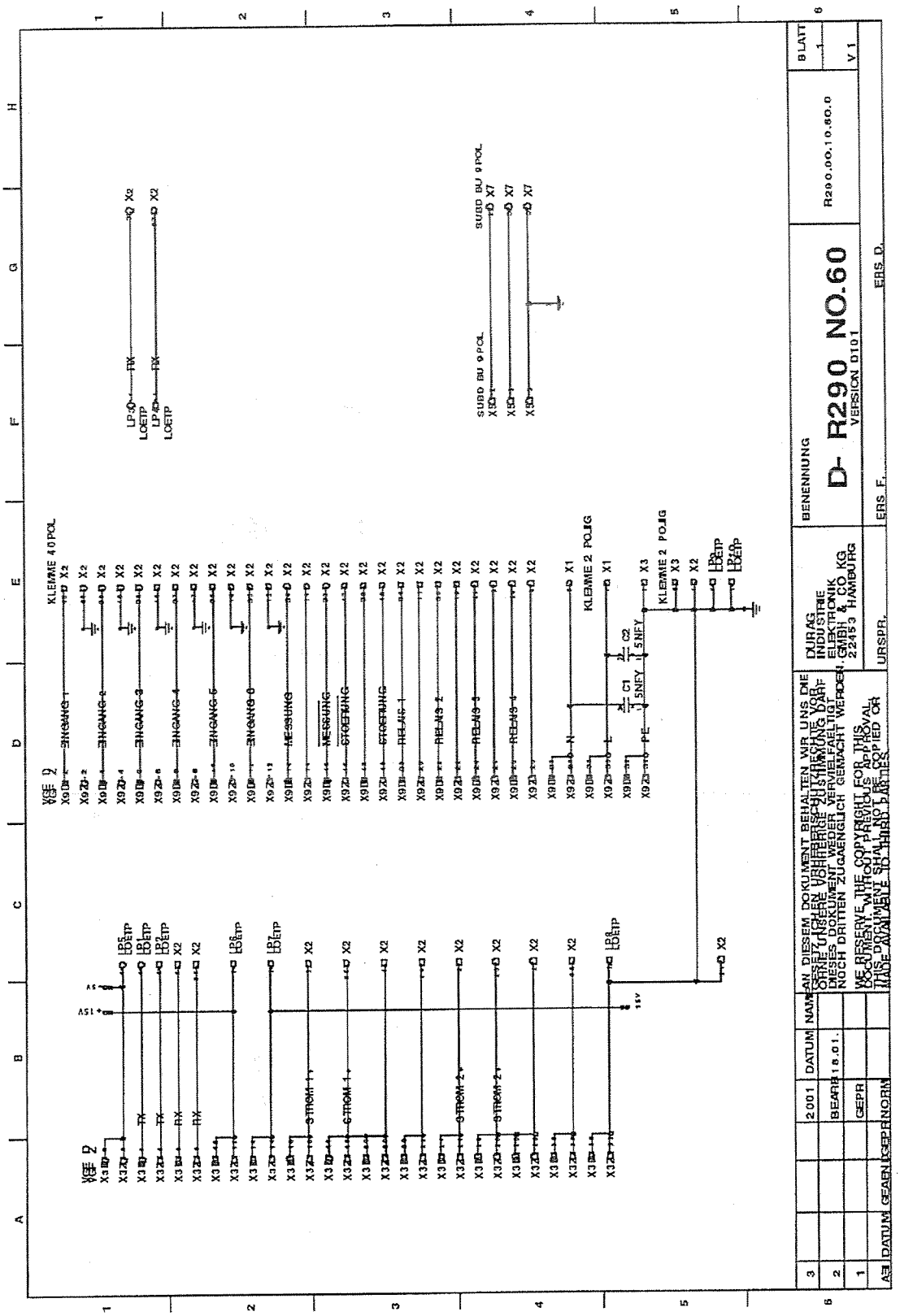
BENENNUNG
D- R290 NO.60
VERSION D101
R290.00.10.60.0
DURAG INDUSTRIE ELEKTRONIK GMBH & CO KG 22453 HAMBURG
KLEMME 40 POL
KLEMME 2 POLIG
SUBD BU 9 POL
ERS F.
ERS D.
URSPR.
BLATT
V1
2001
DATUM
NAME
BEARB 18.01.
GEPR
NORM
DATUM
GEAEN
GEPR
AN DIESEM DOKUMENT BEHALTEN WIR UNS DIE GESETZLICHEN URHEBERSCHUTZRECHTE VOR. OHNE UNSERE VORHERIGE ZUSTIMMUNG DARF DIESES DOKUMENT WEDER VERVIELFAELTIGT NOCH DRITTEN ZUGAENGLICH GEMACHT WERDEN.
WE RESERVE THE COPYRIGHT FOR THIS DOCUMENT. WITHOUT PREVIOUS APPROVAL THIS DOCUMENT SHALL NOT BE COPIED OR MADE AVAILABLE TO THIRD PARTIES

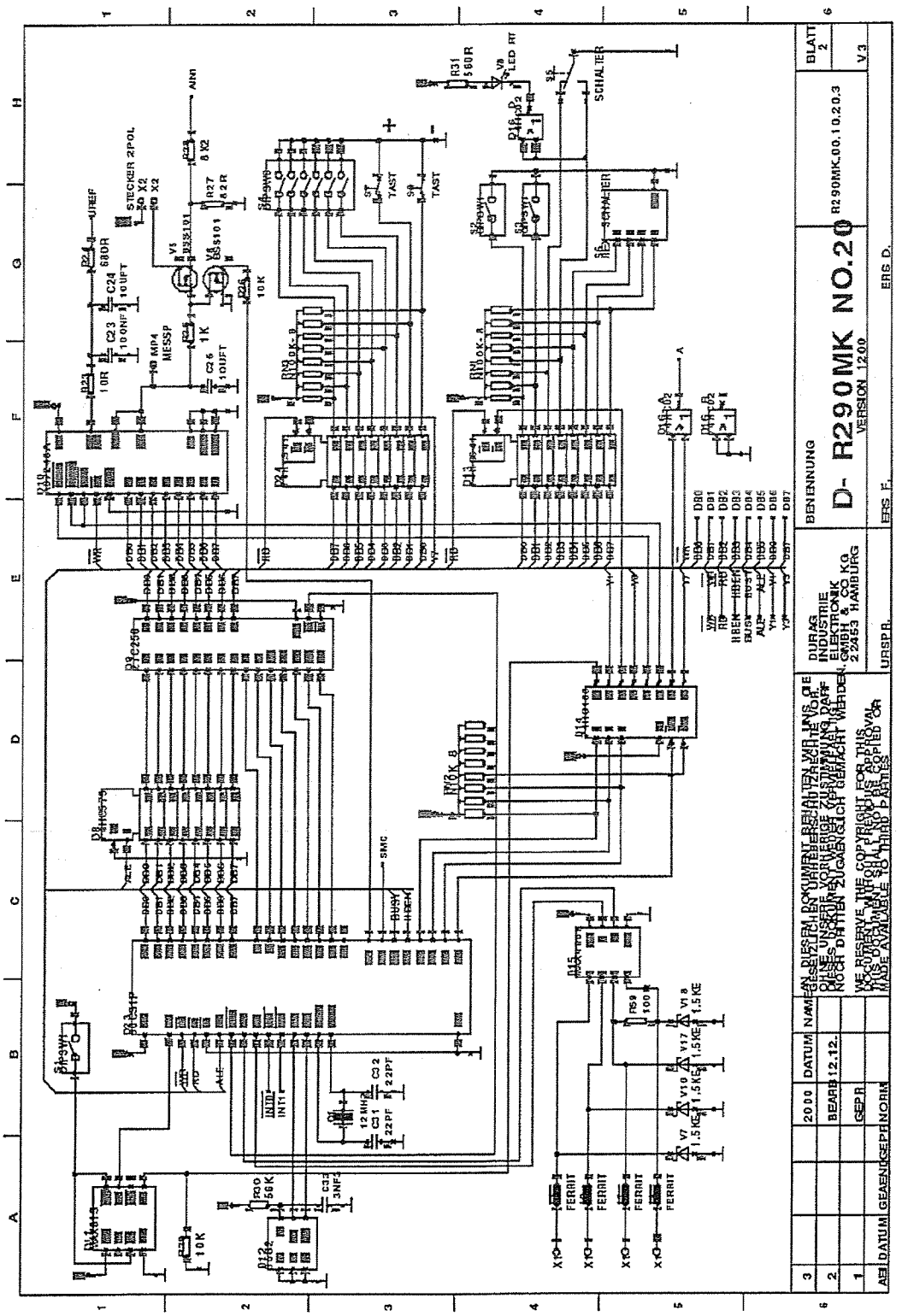
D- R290MK NO.20
VERSION 1200
R290MK.00.10.20.3
BENENNUNG
DURAG INDUSTRIE ELEKTRONIK GMBH & CO KG 22453 HAMBURG
BLATT 2
V3
ERS D.
ERS F.
URSP R.
2000
DATUM
NAME
BEARB 12.12.
GEPR
NORM
SCHALTER
TAST
FERRIT
SMC
BUSY
HBEN
HRSP
ALE
AIN1
STECKER 2POL
MP4 MESSP
10K
10R
680R
10UFT
10UFT
1K
10K
12 MHz
22PF
22PF
1.5KE
1.5KE
1.5KE
1.5KE
100R
560R
LED RT
DB0
DB1
DB2
DB3
DB4
DB5
DB6
DB7
A
B
C
D
E
F
G
H

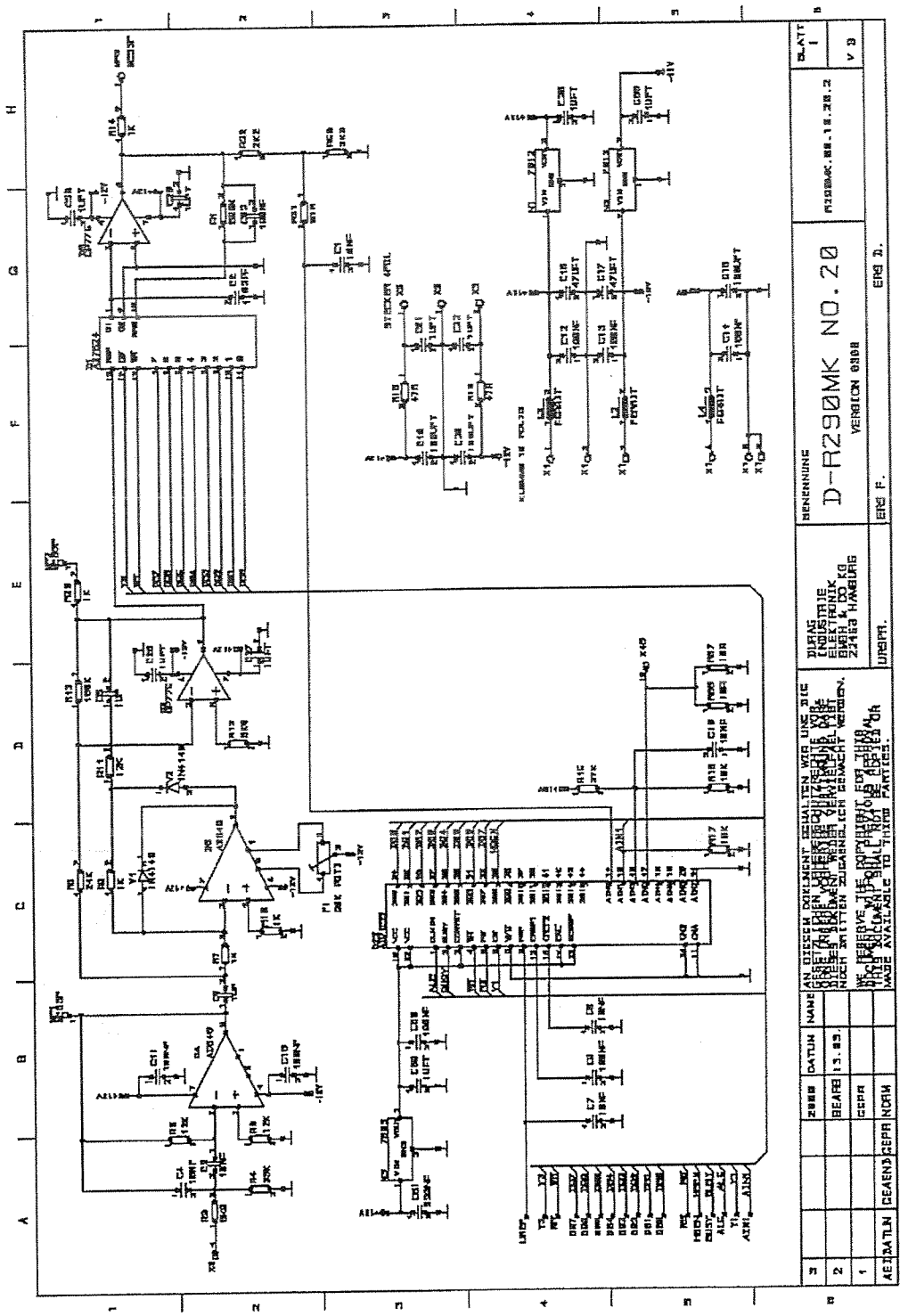
D-R290MK NO. 20
VERSION 0308
DURAG
INDUSTRIE
ELEKTRONIK
BWEH & DO KG
22453 HAMBURG
BEARB
13.03.
GEPR
NORM
DATUM
NAME
ERG D.
ERG F.
URSPR.
SLATT
1
V 3

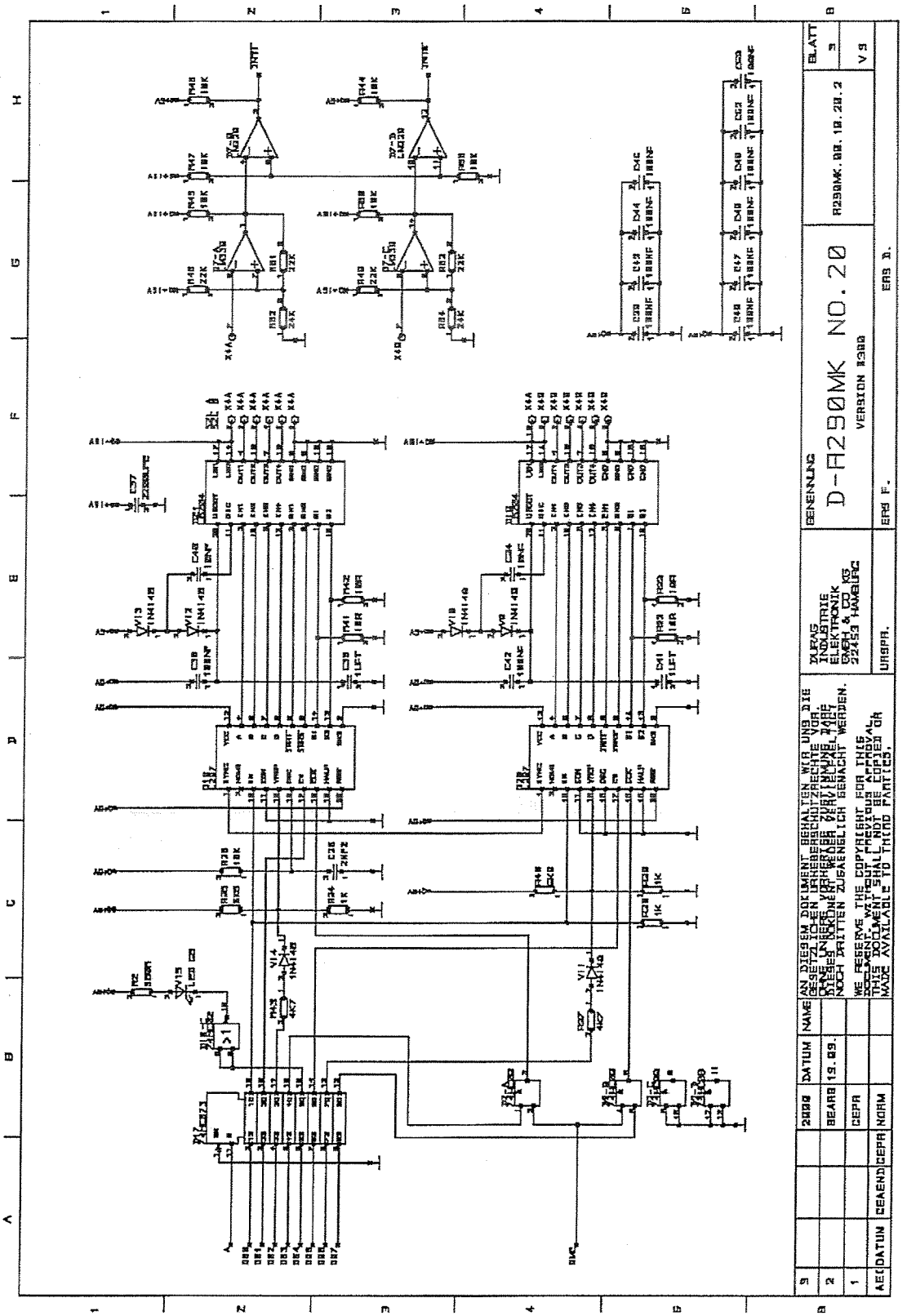
D-R290MK NO. 20
VERSION 8300
DURAG
INDUSTRIE
ELEKTRONIK
GMBH & CO KG
22453 HAMBURG
R290MK.00.10.20.2
BLATT
3
V 9
ERS F.
ERS D.
URSPR.
AN DIESEM DOKUMENT BEHALTEN WIR UNS DIE GESETZLICHEN URHEBERSCHUTZRECHTE VOR. OHNE UNSERE VORHERIGE ZUSTIMMUNG DARF DIESES DOKUMENT WEDER VERVIELFÄLTIGT NOCH DRITTEN ZUGAENGLICH GEMACHT WERDEN.
WE RESERVE THE COPYRIGHT FOR THIS DOCUMENT. WITHOUT PREVIOUS APPROVAL THIS DOCUMENT SHALL NOT BE COPIED OR MADE AVAILABLE TO THIRD PARTIES.
2000
DATUM
NAME
BEARB
19.09.
CEPR
NORM
CEAEND
DATUM
AEC

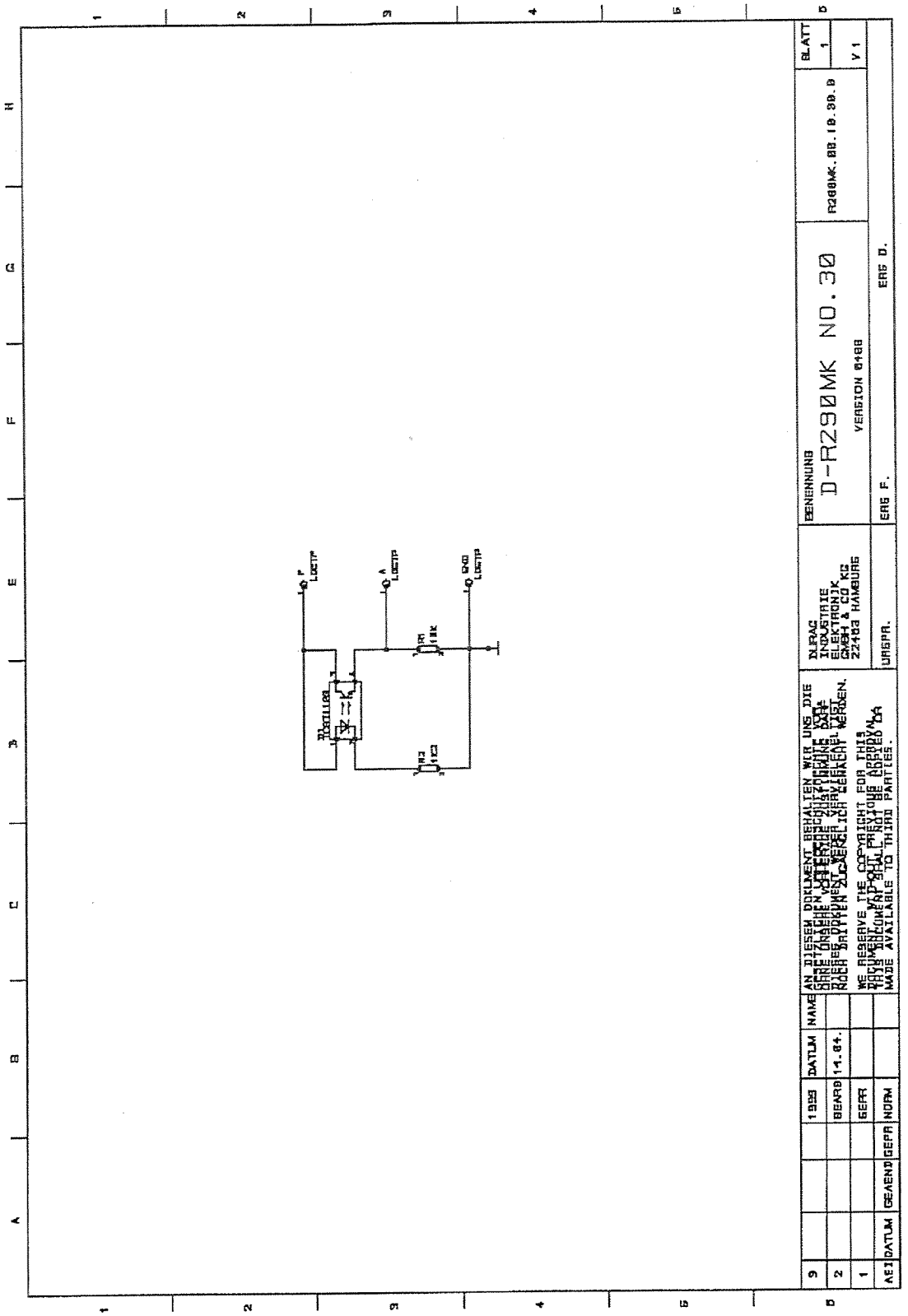
BENENNUNG
D-R290MK NO.30
VERSION 0488
DURAG
INDUSTRIE
ELEKTRONIK
GMBH & CO KG
22453 HAMBURG
ERS F.
ERS D.
BLATT
1
V 1
AN DIESEM DOKUMENT BEHALTEN WIR UNS DIE
WE RESERVE THE COPYRIGHT FOR THIS
DOCUMENT WITHOUT PREVIOUS APPROVAL.
THIS DOCUMENT SHALL NOT BE COPIED OR
MADE AVAILABLE TO THIRD PARTIES.
DATUM
NAME
BEARB
14.04.
GEPR
NORM
GEAEND
DATUM

9 Notes

SECTION 2.0

DUST COLLECTOR
OPERATION AND MAINTENANCE
PROCEDURES

Particulate Matter Control Device Requirements

1. **Specifications:**

   - All particulate matter control devices shall meet an emission rate at or less than an outlet grain loading of 0.02 grains / $ft.^3$ of air.
   - Particulate matter control devices shall be of the Jet-Pulse design with the following features:
     - Self cleaning with high pressure pulse jets of air.
     - Top bag removal.
     - Snap-in bags.
     - Cartridge type filters.
     - Self-supporting cages with integral venturi nozzles.
     - Timer for cleaning individual rows of bags.
     - Double tipping valves and rotary air locks at dust hopper outlet.
     - Differential pressure transmitters for on demand bag cleaning.
     - Noise level less than or equal to 85db at a distance of 3 ft.
     - Service platform and caged ladder when needed.
   - All piping shall meet the following:
     - Air flow velocities shall be between 3500 – 4000 ft./sec.
     - Pipe bends shall have a minimum radius of 2 x pipe diameter.
     - Pick up points shall be designed in accordance with the standards set forth in "Industrial Ventilation" published by American Conference of Governmental Industrial Hygienists.
   - Fans shall be designed so that noise levels are less than or equal to 85db at a distance of 3ft.

2. **Installation:**

   - All particulate matter control device and fan installations shall provide adequate access for personnel and any maintenance activities that might be needed.
   - Clean air shall be provided for bag the cleaning system.

3. **Operation:**

- All operation shall be followed according to manufactures guidelines and specifications, located in maintenance files. At no time shall a dust collector be modified without proper engineering and required air permitting.

Monitoring – Particulate Matter Control Devices

1. **Process Particulate Matter Control Devices:**

   - Static pressure across the particulate matter control device shall be monitored by the use of a differential pressure transmitter gauge and fan amperes. The differential pressure transmitter will have an output signal to the control room as well as a dial for readings taken at the dust collector. If a control room operator gets an alarm of a high or low differential pressure reading or a variation in fan amperes he will notify the shift foreman. The shift foreman will investigate the nature of the problem and corrective actions will be taken as follows:

     - If the foreman detects visible emissions he will initiate an excursion work order and call a particulate matter control device repairman to fix the problem. The repairman will follow the guide lines in the "Trouble Shooting Section" to make the needed repairs.
     - If no visible emissions are detected he will initiate an excursion work order and call an instrument repairman to check the instruments.
     - The foreman will log all incidents in his shift log.

   - All incidents requiring instrument or particulate matter control device maintenance personnel will be logged into the computerized MP2 maintenance system as an excursion work order, identified by the particulate matter control device nomenclature.
   - After any repairs are done due to visible emissions, a visual emissions check will be made to ensure the particulate matter control device is operating properly before it is released to production personnel.

2. **Utility Particulate Matter Control Devices:**

   - It is the responsibility of all Phoenix Cement Company employees to report any visible emissions from any particulate matter control device when observed. Utility dust collectors are checked weekly by particulate matter control device repairmen and the results of their inspections are recorded in their maintenance logs. If visible emissions are reported by an employee or particulate matter control device repairman the following actions are taken:

- The shift or dust particulate matter control device foreman is notified. In the event a shift foreman is notified he will follow the procedures for process particulate matter control devices. If the dust particulate matter control device foreman is notified he will instruct the needed personnel to repair the problem.
- After repairs have been made according to the particulate matter control device foreman's instructions, repairs will be logged into the computerized MP2 maintenance system. Before releasing the particulate matter control device to production personnel a visual emissions check will be made to ensure the proper operation of the particulate matter control device.

Inspection and Maintenance

1. **Scheduled Inspections:**

- All particulate matter control devices will have a weekly inspection by a particulate matter control device repairman. The inspections will be setup in the computerized MP2 maintenance system and all inspection reports will be logged onto the system. The following items will be inspected:
  - Inspect for visible emissions.
  - Check differential pressure to be sure it is in the normal range for that particular dust collector.
  - Inspect blow pipe valves for malfunction.
  - Determine whether water trap on air header are properly draining.
  - Inspect fan for vibration, hot bearings, loose belts, and air leaks.
  - Inspect ductwork for holes.
  - Check damper linkage and proper damper setting (if equipped).
  - Check for proper operation of the tipping valves or rotary air lock at the dust hopper outlet.
  - Inspect dust hopper for plugging.
  - Inspect the screw or aeroslide under the tipping valves or rotary feeder for malfunctions.
  - Inspect dust collector inlet pipes for plugging.
  - Check air connections and instrumentation connections.
  - Inspect manometer for fluid (if equipped).
  - Inspect particulate matter control device housing for cracks and holes.
  - Inspect timer operation.

- Inspect timer to determine whether it is operating according with specifications located in maintenance files.

2. **Repairman Duties and Responsibilities:**

- The primary responsibility of the repairman are to:
  - Install and maintain various types of particulate matter control devices.
  - Maintain internal and external equipment associated with dust collection.
  - Maintain airlines, airline oilers, and cylinders.
  - Make repairs to particulate matter control device equipment.
  - Trouble shoot any particulate matter control device problem and determine what repairs will be needed.
  - Make inspection reports for particulate matter control devices.
  - Check for visible emissions and record differential pressure in inspection report.
  - Immediately notify particulate matter control device foreman of any operational problems associated with the particulate matter control device.
  - Be available on off hours if needed for urgent repair work.

Particulate Matter Control Device Startup and Shutdown

1. **General Conditions:**

- When new bags are installed, the particulate matter control device must be brought on-line slowly to avoid permanent damage to the filtration media. Without protective dust cake, clean filters are sensitive to dust abrasion and penetration of fine particles. Dust penetration can lead to permanently reduced permeability. The velocity should always be kept low until a sufficient dust cake is built on the bags. This will be indicated by a pressure differential of 1-2 inches water column. The gas flow can then be slowly increased to the design rate.

2. **Startup:**

- Ensure all particulate matter control device components are in good working order and are in proper operating mode.
- Avoid passing below the dew point when dirty gases are present. The air in the system should be above the dew point before the introduction of feed into the system.
- Check monitoring devices for proper operation and calibration.

3. **Shutdown:**

- Remove the feed into the system before allowing the temperature to descend below the dew point. As the collector cools, moisture may condense on the bags once dew point is reached. The inlet and outlet temperatures should be consistent and below the dew point.
- Do not store dust in the hopper. The presence of any moisture can cause it to harden, making it very difficult to remove.
- Allow bags to clean down after dust has stopped entering the hopper and remove this material from the hopper, but do not over clean the filters.
- Check to see that all components are in the proper shutdown mode.

General Operation and Troubleshooting

1. Particulate Matter Control Device Fans:

- As ventilation system changes are needed to accommodate increased production, ventilation needs, or process changes, more airflow is required. If a system has not changed, but airflows are not at the designed level, troubleshooting the fan may return the system to the designed performance level. Follow these steps for checking fan performance:
  - **Check the mechanical condition of the fan.**

    Inspect the fan drive belts for loose or out of alignment conditions. This condition could account for as much as a 20% decrease in fan speed. Check the alignment of the inlet cone and fan wheel. Set to manufactures designed settings for maximum fan performance.
  - **Keep the fan clean.**

    If dust buildup is detected on the fan wheel it must be cleaned to return the fan to it's peak designed capacity.
  - **Check for correct rotation.**

    If repairs are done to the fan motor, rotation must be correct for the fan to move the designed airflow. Fan rotation must also be checked on startup of any new fan installation.
  - **Check dampers and controls.**

    Look for stiff operating dampers or looseness in the control linkage.
- At no time shall a fan be operated beyond its designed speed. If more airflow is required for the system, engineering will be consulted as to any desired changes to the fan or particulate matter control device. Prior to any changes to the fan or particulate matter

control device, air operating permits will be checked and a determination will be made as to the need for permit modifications.

2. **Differential Pressures:**

- Differential pressure across a dust collector is of major concern when operating a system. High differential pressure can cause damage to the filters or be an indication of decreased airflow through the system. Low differential pressure can cause fabric bleedthrough and blinding if the dust cake is too light.
- The location of differential pressure taps is critical to proper pressure monitoring. Pressure taps will be located directly above and below the tubesheet to eliminate mechanical losses in the gauge readings. One of the following pressure gauges will be used; manometer, Magnahelic, or differential pressure transmitter. A sudden drop in pressure will indicate a leak in the system. A sharp rise in pressure will indicate the filters are blinded or "caked" with particulate.
- For a particulate matter control device to operate efficiently, the fabric filters must capture and release particulate during the cleaning cycle. The effectiveness of this process depends on the development of an initial control layer of dust that protects the fabric interstices.

3. **Pulse-Jet Types:**

- In pulse-jet particulate matter control devices, the cleaning function not only removes the collected dust, it rearranges the remaining dust cake structure on the bag, resulting in a change in differential pressure. In a unit with high upward gas velocities, mechanical separation of the fine submicron dust can occur, creating a dust cake structure that is very dense. A dense dust cake creates a greater resistance to airflow and higher differential pressures.
- **Pulse Cycle.**

  The cleaning cycle for standard high pressure, low volume pulse-jet collectors should be adjusted so the pulse duration produces a short, crisp pulse that creates an effective shock wave in the bag. This duration is generally set to fire for 0.10 to 0.15 second, based on the manufactures recommendations. (Other styles, such as low pressure, high volume pulsing and medium pressure, medium volume, use different settings to operate and should be examined on an individual basis.)

  The frequency of the pulse cleaning is also vital to proper dust cake retention. This frequency can vary from 1 to 30 seconds or more and is adjusted by means of a setting on the timer board or PLC.

  To ensure proper cleaning frequency, an automatic "clean-on-demand" system utilizing a pressure switch such as a differential pressure transmitter can be installed. This type of system automatically steps through a cleaning cycle that starts when the high differential pressure set point is reached and stops when it cleans down to the low

differential pressure set point. It can also save on compressed air usage. The range on the high/low differential setting should be 0.5-1.0 inches maximum.

On pulse-jet types, the pulse frequency can be increased. However, the next pulse should not be programmed to fire until the compressed air pressure is regained so the same pulse force is obtained for each row cleaned. The regain of air pressure is dependent on the capability of the compressed air system tied to the dust collector and the size of the compressed air piping run to the header tank. The pipe should be large enough to repressurize the header in a minimum time. Typically, the feed line should be a 1 inch diameter pipe, depending on compressed air used.

- **Troubleshooting Pulse-Jet Cleaning.**

  Pulse-valve malfunctions are usually caused by diaphragm failure or dirt, oil, and / or moisture getting into the valve body. These problems can be identified by disassembling the valve and inspecting it. Before checking valves, verify that the tubing and fittings between diaphragm (pulse) valves and solenoid valves are not leaking, and that the tubing is connected to the inlet port on the solenoid valve.

  Prior to servicing the diaphragm valve, the timer board, and the solenoid pilot valve needs to be checked for proper operation. If it is malfunctioning, refer to the troubleshooting flow chart at the end of this section.

- **Cage Inspections.**

  Cages are to be inspected any time a new bag is installed. The most common problems are bent and damaged cages that cannot properly support the filter bag. Cages in corrosive environments can eventually rust and pit.

  Corroded areas begin to abrade the fabric as it flexes during the cleaning cycle. Cage bottom pans with sharp edges can cause similar damage.

- **Bag to Cage Fit.**

  For proper performance of pulse-jet filters, the fit relationship between the bag and cage is critical. Filters that are too loose or too tight will severely limit collection efficiency and lead to premature physical failure.

- **Pulse-Jet Bag Installation.**

  Correct filter bag installation is important to maximize the life of the fabric. Bags with flanges or cuffs that fold over the tops of their support cages should be checked for smoothness around the edge to prevent leakage and bag abrasion. Seam placement on bottom load bags should be 180 degrees from the split or gap in the cage collar. The clamp on these bags should be installed 90 degrees in relation to the seam on the bag and positioned on the groove in the cage. Snapband bags for top access pulse-jet units should be installed with the seams all facing the same direction. This allows for identification of areas where problems are occurring and improved troubleshooting of the unit.

4. **Reverse Air Types:**

- To get the maximum performance in reverse air systems, it is necessary to monitor the manometer or Magnehelic gauge on each compartment during the cleaning cycle. A reading should be taken at each of the following times:
  - Before the module starts to clean.
  - When the module is isolated before the reverse air damper opens.
  - When the reverse air is energized.
  - During the null period after the reverse air.
  - When the module is returned to service.

  When the module is isolated, any reading other than zero on the manometer is an indication that the isolation damper is not sealing. Air moving through the module due to leakage can affect the ability of the reverse air to provide maximum cleaning efficiency. Also, improper tensioning of the filter bag can cause ineffective bag movement resulting in poor cleaning and bag abrasion.

  It is also very important that the "null period" of collection after cleaning be of sufficient time to allow for the fine particles to fall the length of the bag and be collected in the hopper. (This is also true for shaker collection.)

- **Compartmental Valves and Dampers:**

  Off-line compartmental cleaning requires isolation from the rest of the collector to get effective dust removal from the filter bag. Regardless of the type of damper or valve used to achieve this, certain conditions can be checked to ensure proper isolation. The seat of the valve is primary to a good seal.

  Another common problem is material buildup in the plenum around the valve that could prevent the valve or damper from sealing properly, particularly if moisture is present in the gas stream. Corrosion on the valve seat can also prevent a good seal.

  Consideration of valve and damper maintenance requirements during the initial design phase or when making changes to a system will help ensure trouble-free and effective operation of these assemblies. Components that are replaced in difficult access areas may not receive necessary maintenance.

5. **Air Inleakage:**

- Small air leaks will starve a dust collector system. In a ventilation system, the fan is sized to overcome all of the design static resistance in the system. The suction pull is greater at leaks located closer to the fan, and the volume of inleakage increases. To calculate the volume of inleakage, use the following formula:

  $$CFM = 4{,}005 \sqrt{VP} \times \text{Area (ft.}^2\text{)}$$

  VP = velocity pressure in inches w.c.

CFM = airflow in $ft.^3$/min.

- Leakage in a positive pressure system located after the fan outlet will cause dust emissions and housekeeping problems.
- On the negative pressure side of the fan, inleakage causes air volume problems by reducing suction at the pickup points. While not as large a problem as with hot gas, corrosion can still form around leaks due to moisture from ambient air being drawn into the system.
- Opportunities for inleakage exist through the ventilation system. Common trouble spots are expansion joints, access doors, screw conveyor covers, rotary air locks, poorly connected seams, existing corrosion spots, or cracked welds.

6. **Ambient Air Leaks In Hot Gases:**

- The fan is a mechanical pump that moves a set volume of air. The air capacity of the fan is determined by the pressure resistance of the system. The fan is a fixed volume machine since it typically runs at a fixed speed. Temperature changes also cause load changes to the fan drive.
- Inleakage of ambient air satisfies the volumetric needs of the fan reducing the process hot air because of its greater air density. The density of ambient air is almost 1.5 times heavier than process air at 325^0 F.
- Inleakage can also lower the operating temperature below the dew point, causing condensation with the following results:
  - Increased maintenance and replacement expenses due to component corrosion and deterioration.
  - Shortened filter bag life caused by surface agglomeration and chemical attack.
  - Higher static pressure losses across the filters.
  - Lower gas flow because of a denser dust cake.

7. **Sequencing Compartment Cleaning:**

- In systems where dust is delivered to a screw conveyor, the amount of dust removed can be dependent on the sequencing of the modules above the screw.
- Improper sequencing of the cleaning system on a compartmental dust collector with pyramid hoppers can cause overloading of the discharge screw conveyor and poor dust removal. This can cause overfilling of hoppers, and in turn, bag wear, higher pressure drop, and reduced gas flow.
- When a compartment cleans, the material often has substantial volume and fills the lower portion of the hopper. This volume immediately fills the screw conveyor. As subsequent hoppers clean, it may be impossible for the new material to be discharged until the material from the previously cleaned compartment is fully removed from the

screw conveyor. The compartment cleaning should be sequential in a manner that is concurrent with the screw conveyor flow. Begin cleaning with the compartment furthest from the discharge and finish with the compartment closest to the discharge area. In addition, the air locks and screw conveyor must be adequately sized to handle the maximum dust load the collector may experience.

Bag and Cage Damage evaluation

Damage	Cause	Solution	Options
Bags have internal abrasion marks along vertical wires.	1. Cage wires are deeply pitted as a result of excessive corrosion. 2. Bag is oversized.	1. Replace with new galvanized steel cage. 2. Replace with new bag that is the correct size.	1a. Use a mild steel cage if chloride and moisture (HCL) are present. 1b. Use an epoxy coated cage.
Cuts and/or internal damage is noticeable at the bottom of the bag where it contacts with the edge of pan.	Sharp edge on pan.	Use cage with rounded edge pan.	Increase the number of vertical wires to reduce amount of fabric drawn between wires across edge of pan.
Cage body has collapsed; broken welds and bent wires have caused bag wear points.	1. Cage has been weakened by corrosion. 2. Pressure exceeds cage strength. 3. Rough handling by maintenance crews.	1. Replace with standard cage. 2. Change operating conditions to reduce differential pressure.	1. Replace with a coated cage or a stainless cage. 2a. Increase the number of cage rings. 2b. Make cage from heavier gauge wire.
Bag failure resulting from excess fabric slack pinch above top ring or below bottom ring.	Cage is tapered or bowed between the ring and the pan.	Design cage with minimal taper (larger pan or top).	Change ring spacing to minimize taper or bowing.
Flex line failures between the vertical wires.	Bags are not adequately supported by cages.	Replace with cage providing more support (20 vertical wires and/or closer horizontal ring spacing).	1. Convert from 10 or 12 wire cage to 20 wire cage design. 2. Reduce ring spacing.
Bags are difficult to remove from bags.	Corrosion causes rough surfaces which increase friction between the bag and the cage. (Actual chemical bonding between the cage wire and fabric can occur.)	Replace all cages with new standard cage.	1. Use coated or stainless steel cages. 2. Convert to omni top cages to allow for removal of snapband bags and cages as an assembly.

SECTION 3.0

CORRECTIVE ACTION PROCEDURES

Troubleshooting Chart

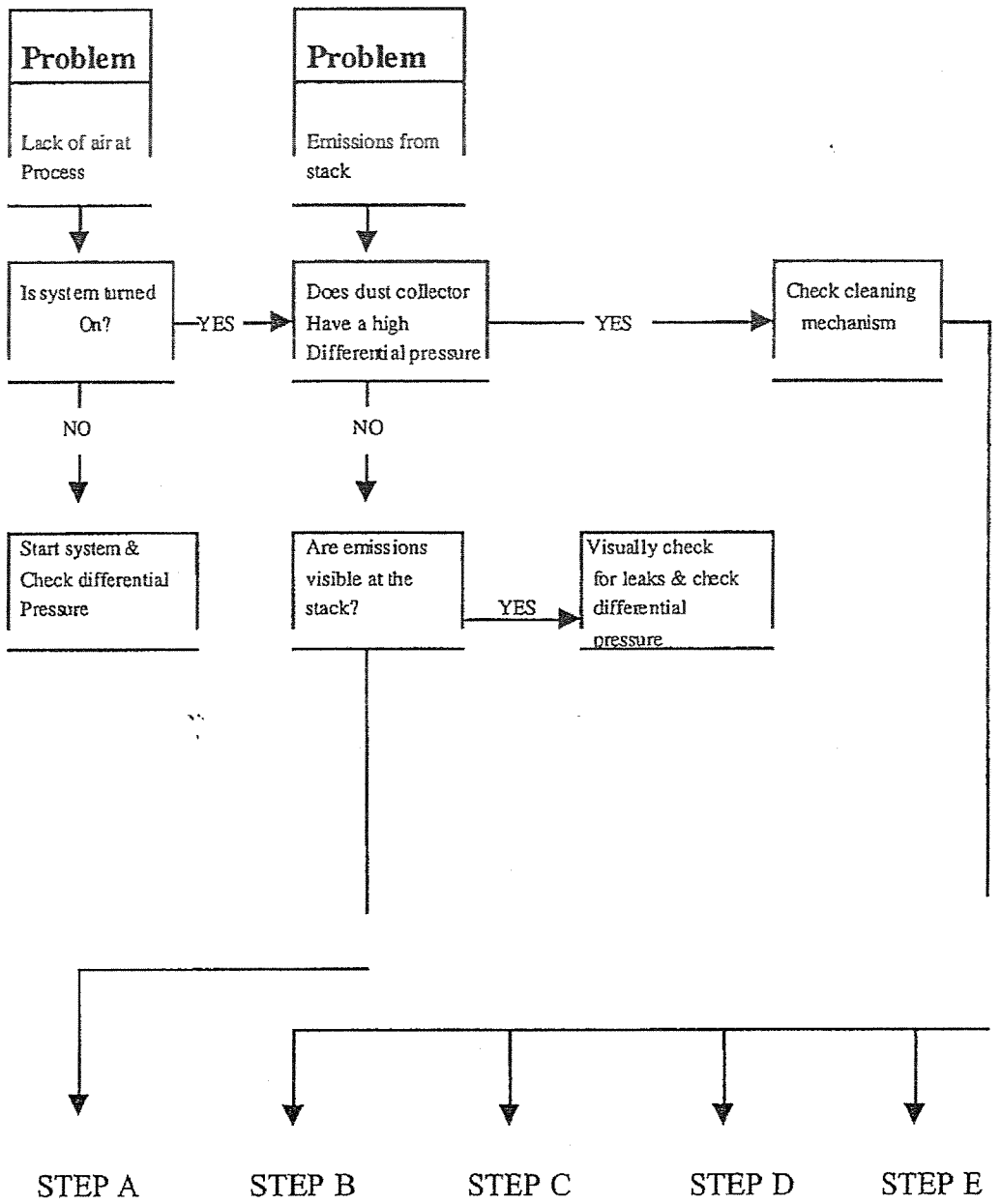

PSM International, Inc.

STEP A

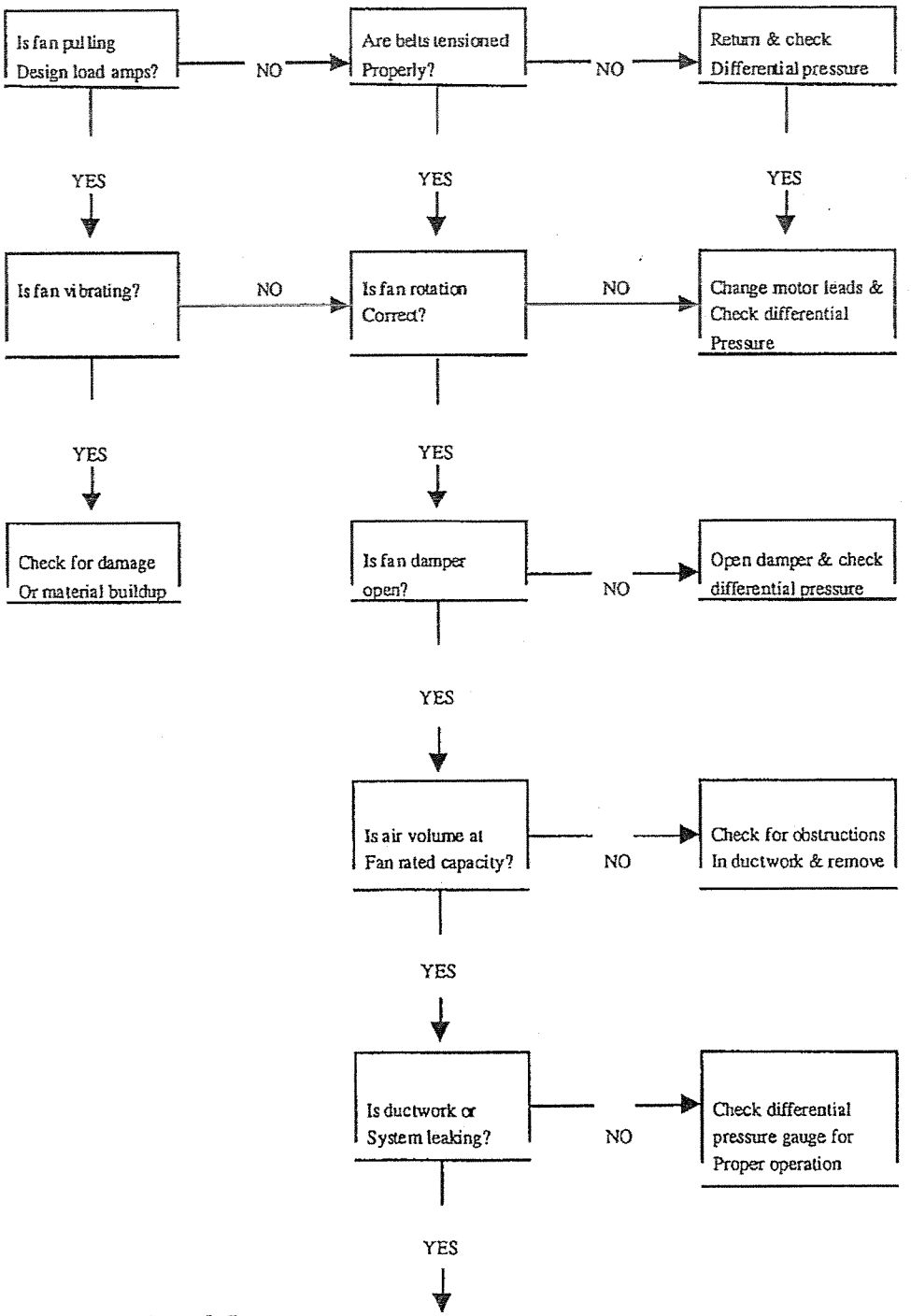

PSM International, Inc.

STEP A

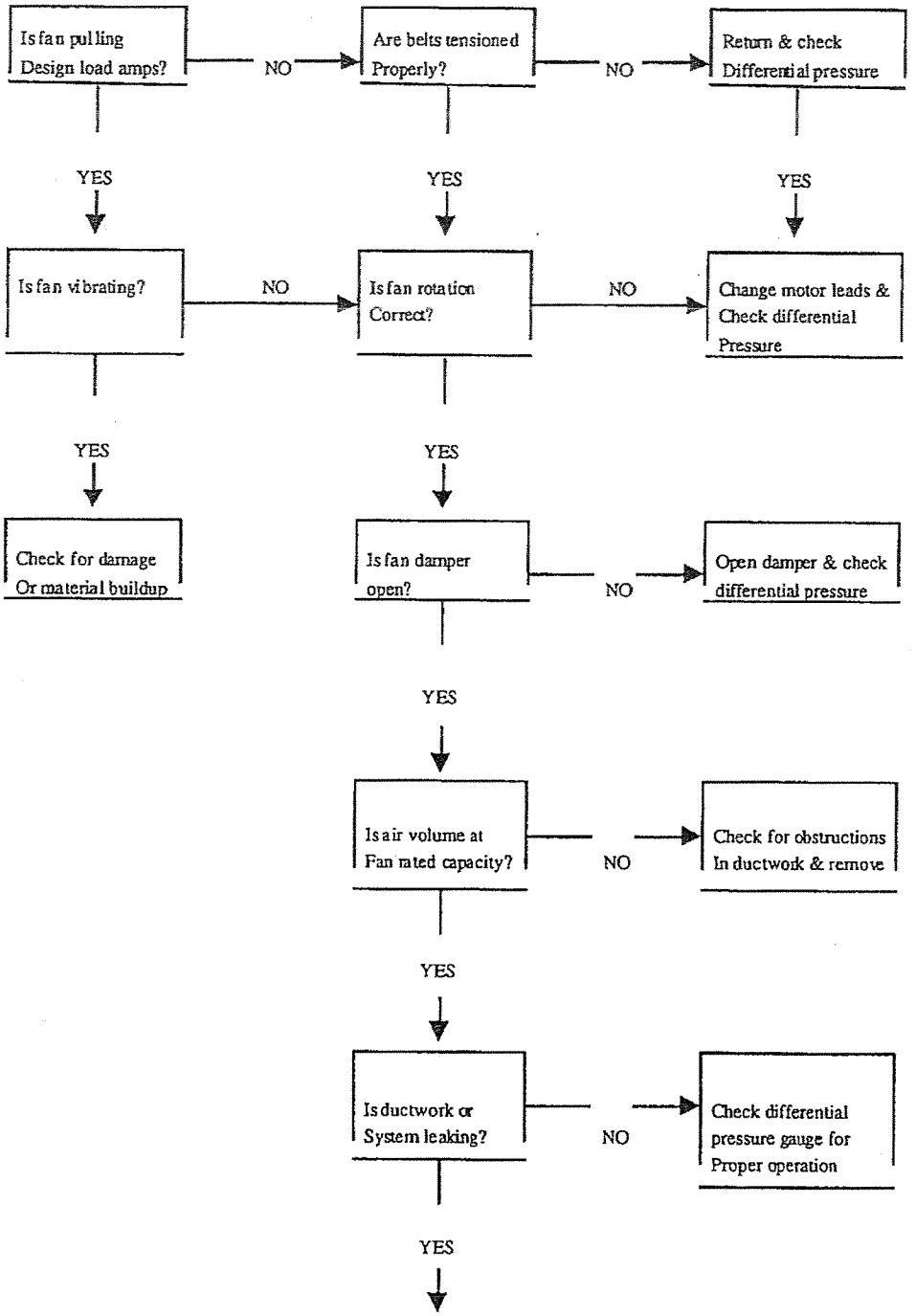
Is fan pulling Design load amps?
NO
Are belts tensioned Properly?
NO
Return & check Differential pressure
YES
YES
YES
Is fan vibrating?
NO
Is fan rotation Correct?
NO
Change motor leads & Check differential Pressure
YES
YES
Check for damage Or material buildup
Is fan damper open?
NO
Open damper & check differential pressure
YES
Is air volume at Fan rated capacity?
NO
Check for obstructions In ductwork & remove
YES
Is ductwork or System leaking?
NO
Check differential pressure gauge for Proper operation
YES

STEP B

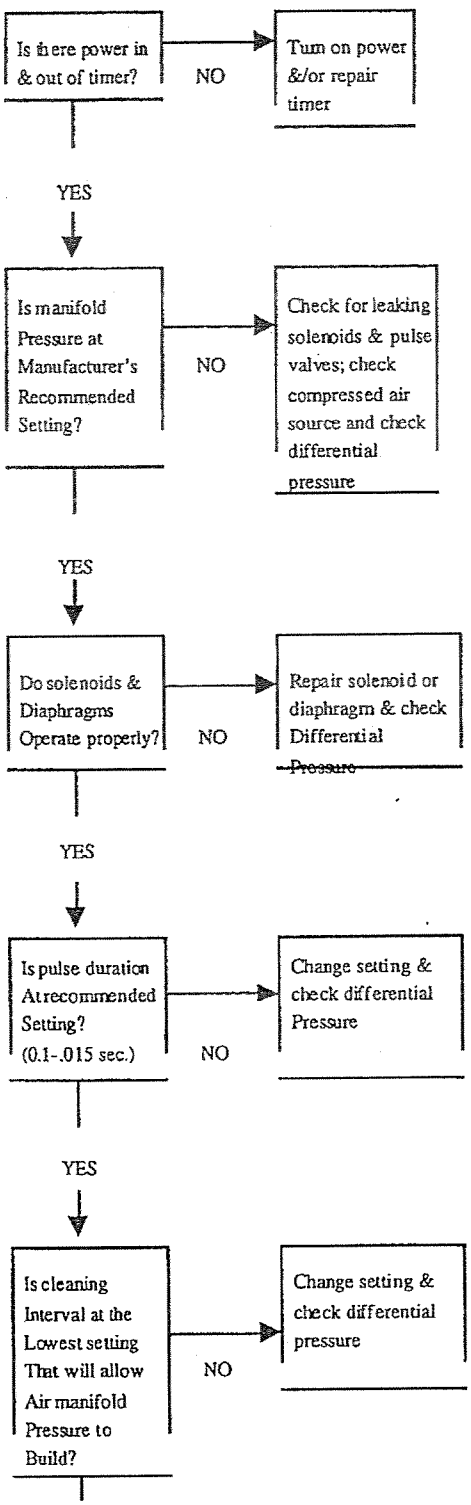

STEP C

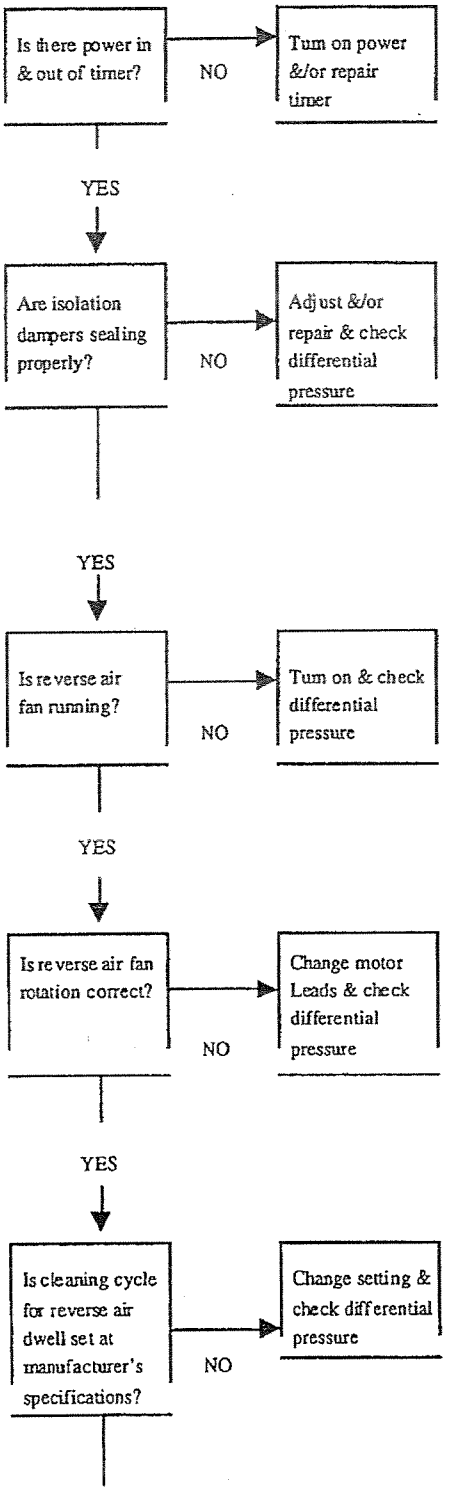

PSM International, Inc.

STEP D

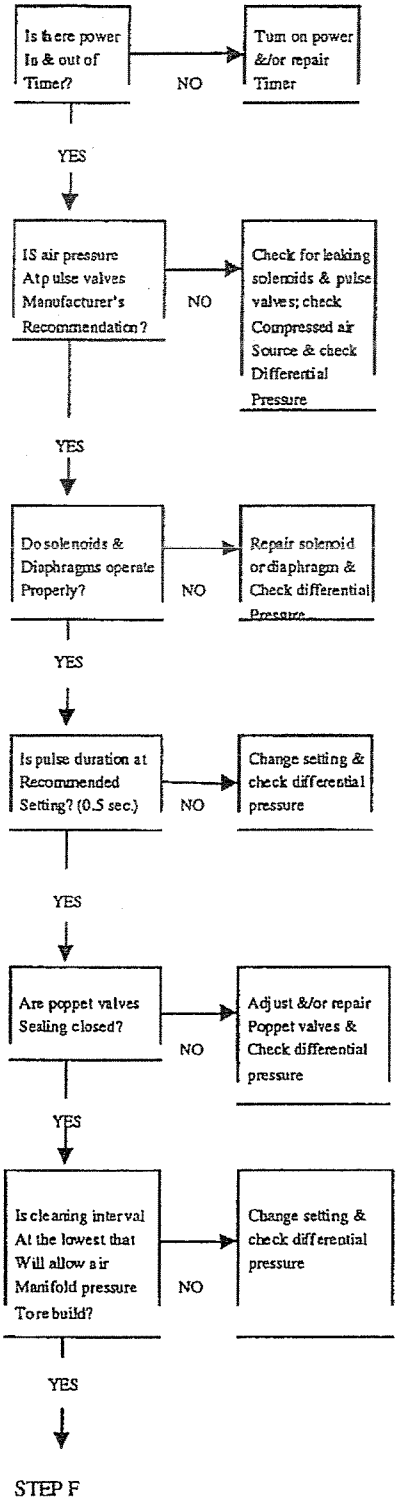
Is there power In & out of Timer?
NO
Turn on power &/or repair Timer
YES
IS air pressure At pulse valves Manufacturer's Recommendation?
NO
Check for leaking solenoids & pulse valves; check Compressed air Source & check Differential Pressure
YES
Do solenoids & Diaphragms operate Properly?
NO
Repair solenoid or diaphragm & Check differential Pressure
YES
Is pulse duration at Recommended Setting? (0.5 sec.)
NO
Change setting & check differential pressure
YES
Are poppet valves Sealing closed?
NO
Adjust &/or repair Poppet valves & Check differential pressure
YES
Is cleaning interval At the lowest that Will allow air Manifold pressure To rebuild?
NO
Change setting & check differential pressure
YES
STEP F

STEP E

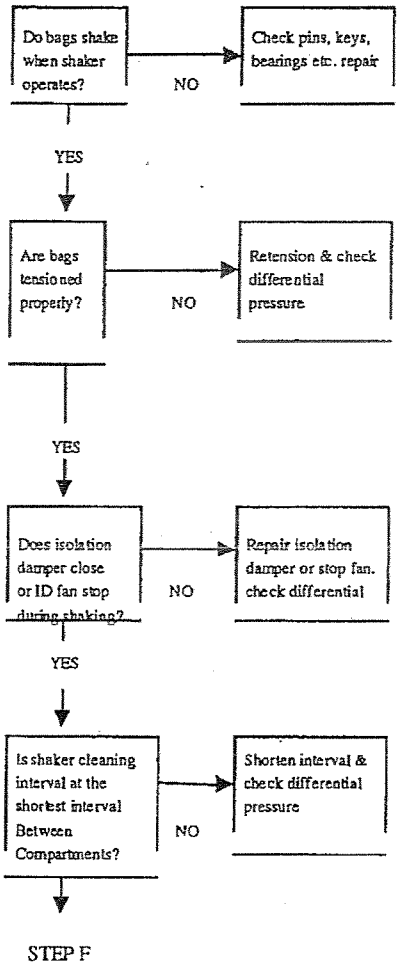
Do bags shake when shaker operates?
NO
Check pins, keys, bearings etc. repair
YES
Are bags tensioned properly?
NO
Retension & check differential pressure
YES
Does isolation damper close or ID fan stop during shaking?
NO
Repair isolation damper or stop fan. check differential
YES
Is shaker cleaning interval at the shortest interval Between Compartments?
NO
Shorten interval & check differential pressure
STEP F

STEP F

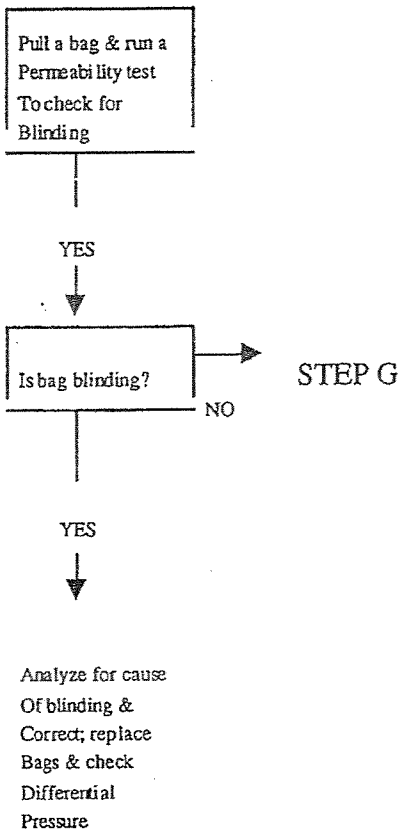
Pull a bag & run a Permeability test To check for Blinding
YES
Is bag blinding?
NO
STEP G
YES
Analyze for cause Of blinding & Correct; replace Bags & check Differential Pressure

STEP G

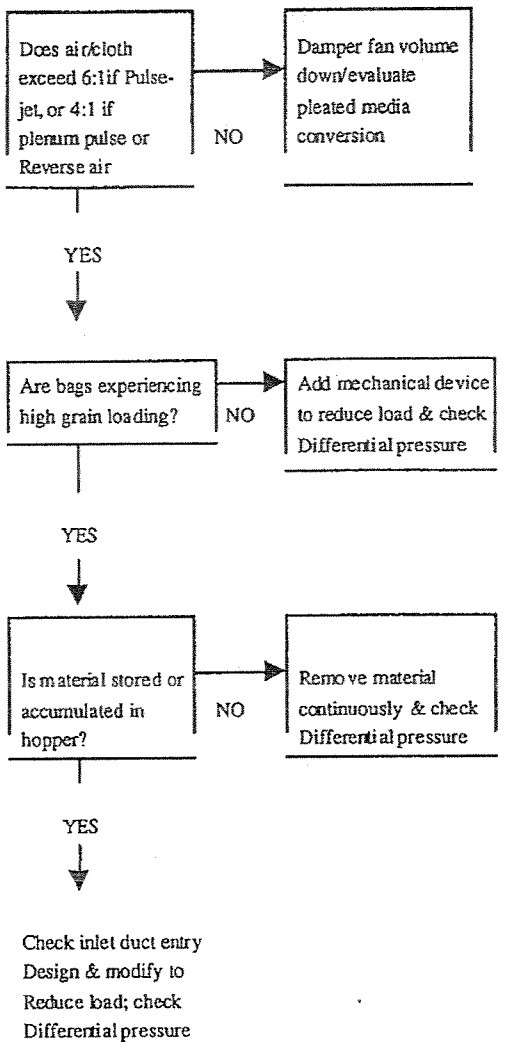
Does air/cloth exceed 6:1 if Pulse-jet, or 4:1 if plenum pulse or Reverse air
NO
Damper fan volume down/evaluate pleated media conversion
YES
Are bags experiencing high grain loading?
NO
Add mechanical device to reduce load & check Differential pressure
YES
Is material stored or accumulated in hopper?
NO
Remove material continuously & check Differential pressure
YES
Check inlet duct entry Design & modify to Reduce load; check Differential pressure

Formulas

ACFM	Actual cubic feet per minute	**PSI**	Pounds per square inch
AMP	Amperage	**RPM**	Revolutions per minute
Dia	diameter	**SP**	Static pressure
FPM	Feet per minute	**SPWG**	Static pressure water gauge
L	length	**VP**	Velocity pressure, inches of water

Total CFM = Velocity (FPM) x Duct Area (ft.^{2})

Velocity = 4,005 $\sqrt{VP}$ at standard Conditions (70^0 F at sea Level)

Velocity at Elevated Temperatures and sea Level, Using Standard Pitot Tube:

Velocity, FPM = 174 $\sqrt{(VP \times \text{Air Stream Temperature } ^0F + 460}$

Total Cloth Area, ft.^{2} = [(Bag Dia (in.) x 3.14 x Bag L (in.)) ÷ 144] x Total Number of Bags

Gross Air-to Cloth Ratio = ACFM ÷ Total Cloth Area (ft.^{2})

Net Air-to Cloth Ratio = ACFM ÷ Total On-Line Cloth Area (ft.^{2})

1 in. SPWG = .578 oz./in.^{2} = .0361 PSI = .0735 in. Hg (Mercury)

1 PSI Air Pressure = 27.70 in. SPWG = 2.036 in. Hg = 0.068 Bar = 0.0703 kg./cm^2

Can Velocity = ACFM ÷ [Total Tube Sheet Area (ft.^{2}) – (Hole Area, (ft.^{2}) x Number of Holes]

7,000 Grains = 1 lb. = 16 oz. = 453.6 grams **1 lb./ft.^{3}** = 0.0624 kg./m^3

Grain Loading Expressed in Grains/ft.^{3} = (Lbs. Of Dust Handled per Minute x 7,000) ÷ ACFM

Lbs. Of Dust/Minute = (Grains/ft.^{3} x ACFM) x 7,000

1 Horsepower = 1.34 kilowatts

1 inch = 25.4 mm = 0.0254 meter

^{0}**C** = (^{0}F – 32) x (5/9) ^{0}**F** = [^{0}C x (9/5] + 32

(530^0 F)

SCFM = ACFM x Actual Temperature (^{0}F) + 460^0 F

Acknowledgements

Phoenix Cement Company wishes to thank BHA of 8800 East 63rd Street, Kansas City, Missouri for the information presented in this document. BHA has been a leader in helping the cement industry achieve environmentally compliant plants.

SECTION 4.0

INSPECTION PROCEDURES – COMBUSTION SYSTEM COMPONENTS

SECTION 4.1

KILN BURNER INSPECTION AND MAINTENANCE

5. MAINTENANCE

5.1 Preventive maintenance, survey

.1 Lubrication
.2 Cleaning
.3 Inspection and adjustment
.4 Checking of condition
.5 Replacement (incl. lubricants)
.6 Performance test

Pos.	Text	.1	.2	.3	.4	.5	.6
00	Burner installation		4A		A		A
03	Burner			A			
05,44	Expansion joints				A		
20	Burner pipe		D		M	T	
25	Coal inlet				A	T	
33	Central duct				A	T	
40	Conical air nozzle				A	T	

D = per 8-hour operation
S = weekly
M = monthly
A = yearly
T = see text in instruction manual

A number in front of the letter indicates the frequency of procedure. For example, 2M = twice a month.

5.1.2 Clean-up

Burner installation (00). General cleaning on and around the equipment.

Burner pipe (20). Remove deposits from the burner pipe.

5.1.3 Inspection and adjustment

Burner (03). When the kiln is shut down, check that the burner is correctly positioned in the kiln.

5.1.4 Checking of condition

Burner installation (00). Check that all hoses and expansion joints are intact. Check the tightness of the closing plate at the door.

Burner pipe (20). Make a visual check to determine if the ceramic coating has sustained damage.

Coal inlet (25) and central duct (33). Check the Densit lining for wear.

Conical air nozzle (40). In connection with reconditioning of the burner pipe, check the condition of the castable around the conical air nozzle. Also check whether the nozzle is affected by corrosion and/or cracks.

5.1.5 Replacement

Burner pipe (20). If the visual inspection reveals damage involving a partial exposure of the steel surface, the burner pipe must be replaced immediately. The pipe must always be replaced in connection with the annual shutdown for maintenance. A complete spare burner pipe unit consisting of burner pipe with swirler unit and air nozzle, inclusive of lining, must always be held available at the plant.

For replacement of burner pipe, see sub-sections 3.5 and 3.7.

Coal inlet (25) and central duct (33). Densit lining to be replaced when deemed necessary.

Conical air nozzle (40). In connection with the reconditioning of burner pipe, the nozzle unit must be replaced if damaged. A spare unit should always be held available. The spare unit is available in excess length in order to avoid coinciding welds.

5.1.6 Performance test

Burner installation (00). Move all adjustment devices to eliminate the risk of their movement being restricted at any location.

5.2 Faults and remedial action

5.2.1 Trouble-shooting chart

Observation	Potential fault	Remedy Pos. 5.2.2
Large, smooth flame extending across the entire cross-sectional area of kiln	Momentum of primary air too low	1
Hard, very bright flame	Momentum of primary air too high	2
Very short flame plume, resulting in overheated burner tip	Momentum of primary air too high Swirling of primary air too high	2 3
Unstable flame with long plume	Defective oil nozzle	4
	Momentum of primary air too low	1
Skew flame	Defective oil nozzle	4
	Clogging of coal duct Dust deposits on burner pipe	5 6

5.2.2 Remedial action

Pos.	Fault	Possible cause	Remedy
1	Momentum too low	Incorrect adustment	Adjust, see sub-section 4.1
		Defective burner pipe	Install replace-ment unit
		Incorrect connection of primary air	Install replace-ment unit
		Malfunction of fan	See instruction manual
2	Momentum too high	Incorrect adjustment	Adjust, see sub-section 4.1
3	Excessive swirl	Incorrect adjustment	Adjust damper (33)
4	Oil nozzle defective	Malfunction of oil burner set	See instruction manual
5	Clogging of coal duct	Penetration of coal dust into coal duct	Retract burner and clean it
6	Deposits on burner pipe	Excessive swirl or momentum	Remove deposits regularly. If neces-sary, reduce swirl or momentum.

SECTION 4.2

PREHEATER INSPECTION AND MAINTENANCE

5. MAINTENANCE

5.1

Preventive maintenance, survey

.1 Lubrication

.2 Cleaning

.3 Inspection and adjustment

.4 Checking of condition

.5 Replacement (incl. lubricants)

.6 Performance test

Pos.	Text	.1	.2	.3	.4	.5	.6
02	Pipe system	.	2A	.	A	.	.
03	Burner asssembly	.	2A	.	A	.	.

D = per 8-hour operation
S = weekly
M = monthly
A = yearly
T = see text in instruction manual

A number in front of the letter indicates frequency of procedure. For instance 2M = twice a month.

5.2

Clean-up

Pipe system (02) and burner assembly (03)

Clean the parts and their surroundings. Always ensure that dust deposits, if any, are removed from the radiation shields.

5.4

Condition checking

Pipe system (02) and burner assembly (03)

Check that the pipe connections are tight.

Check tightness of quick-acting copulings (11).

Check the condition of the packing; replace as required.

Check tightness and condition of steel hoses.

Check for bakings in the gas nozzle holes.

SECTION 5.0

EPA METHOD 22

AND

EPA METHOD 9

METHOD 22 - VISUAL DETERMINATION OF FUGITIVE EMISSIONS FROM MATERIAL SOURCES AND SMOKE EMISSIONS FROM FLARES

NOTE: This method is not inclusive with respect to observer certification. Some material is incorporated by reference from Method 9.

1.0 Scope and Application.

This method is applicable for the determination of the frequency of fugitive emissions from stationary sources, only as specified in an applicable subpart of the regulations. This method also is applicable for the determination of the frequency of visible smoke emissions from flares.

2.0 Summary of Method.

2.1 Fugitive emissions produced during material processing, handling, and transfer operations or smoke emissions from flares are visually determined by an observer without the aid of instruments.

2.2 This method is used also to determine visible smoke emissions from flares used for combustion of waste process materials.

2.3 This method determines the amount of time that visible emissions occur during the observation period (*i.e.*, the accumulated emission time.) This method does not require that the opacity of emissions be determined. Since this procedure requires only the determination of whether

visible emissions occur and does not require the determination of opacity levels, observer certification according to the procedures of Method 9 is not required. However, it is necessary that the observer is knowledgeable with respect to the general procedures for determining the presence of visible emissions. At a minimum, the observer must be trained and knowledgeable regarding the effects of background contrast, ambient lighting, observer position relative to lighting, wind, and the presence of uncombined water (condensing water vapor) on the visibility of emissions. This training is to be obtained from written materials found in References 1 and 2 or from the lecture portion of the Method 9 certification course.

3.0 Definitions.

3.1 *Emission frequency* means the percentage of time that emissions are visible during the observation period.

3.2 *Emission time* means the accumulated amount of time that emissions are visible during the observation period.

3.3 *Fugitive emissions* means emissions generated by an affected facility which is not collected by a capture system and is released to the atmosphere. This includes emissions that (1) escape capture by process equipment exhaust hoods; (2) are emitted during material transfer; (3) are emitted from buildings housing material processing or handling

equipment; or (4) are emitted directly from process equipment.

3.4 *Observation period* means the accumulated time period during which observations are conducted, not to be less than the period specified in the applicable regulation.

3.5 *Smoke emissions* means a pollutant generated by combustion in a flare and occurring immediately downstream of the flame. Smoke occurring within the flame, but not downstream of the flame, is not considered a smoke emission.

4.0 Interferences.

4.1 Occasionally, fugitive emissions from sources other than the affected facility (*e.g.*, road dust) may prevent a clear view of the affected facility. This may particularly be a problem during periods of high wind. If the view of the potential emission points is obscured to such a degree that the observer questions the validity of continuing observations, then the observations shall be terminated, and the observer shall clearly note this fact on the data form.

5.0 Safety.

5.1 Disclaimer. This method may involve hazardous materials, operations, and equipment. This test method may not address all of the safety problems associated with its use. It is the responsibility of the user of this test method to establish appropriate safety and health practices

and determine the applicability of regulatory limitations prior to performing this test method.

6.0 Equipment.

6.1 Stopwatches (two). Accumulative type with unit divisions of at least 0.5 seconds.

6.2 Light Meter. Light meter capable of measuring illuminance in the 50 to 200 lux range, required for indoor observations only.

7.0 Reagents and Supplies. [Reserved]

8.0 Sample Collection, Preservation, Storage, and Transfer. [Reserved]

9.0 Quality Control. [Reserved]

10.0 Calibration and Standardization. [Reserved]

11.0 Analytical Procedure.

11.1 Selection of Observation Location. Survey the affected facility, or the building or structure housing the process to be observed, and determine the locations of potential emissions. If the affected facility is located inside a building, determine an observation location that is consistent with the requirements of the applicable regulation (*i.e.*, outside observation of emissions escaping the building/structure or inside observation of emissions directly emitted from the affected facility process unit). Then select a position that enables a clear view of the

potential emission point(s) of the affected facility or of the building or structure housing the affected facility, as appropriate for the applicable subpart. A position at least 4.6 m (15 feet), but not more than 400 m (0.25 miles), from the emission source is recommended. For outdoor locations, select a position where the sunlight is not shining directly in the observer's eyes.

11.2 Field Records.

11.2.1 Outdoor Location. Record the following information on the field data sheet (Figure 22-1): Company name, industry, process unit, observer's name, observer's affiliation, and date. Record also the estimated wind speed, wind direction, and sky condition. Sketch the process unit being observed, and note the observer location relative to the source and the sun. Indicate the potential and actual emission points on the sketch.

11.2.2 Indoor Location. Record the following information on the field data sheet (Figure 22-2): Company name, industry, process unit, observer's name, observer's affiliation, and date. Record as appropriate the type, location, and intensity of lighting on the data sheet. Sketch the process unit being observed, and note the observer location relative to the source. Indicate the potential and actual fugitive emission points on the sketch.

11.3 Indoor Lighting Requirements. For indoor locations, use a light meter to measure the level of illumination at a location as close to the emission source(s) as is feasible. An illumination of greater than 100 lux (10 foot candles) is considered necessary for proper application of this method.

11.4 Observations.

11.4.1 Procedure. Record the clock time when observations begin. Use one stopwatch to monitor the duration of the observation period. Start this stopwatch when the observation period begins. If the observation period is divided into two or more segments by process shutdowns or observer rest breaks (see Section 11.4.3), stop the stopwatch when a break begins and restart the stopwatch without resetting it when the break ends. Stop the stopwatch at the end of the observation period. The accumulated time indicated by this stopwatch is the duration of observation period. When the observation period is completed, record the clock time. During the observation period, continuously watch the emission source. Upon observing an emission (condensed water vapor is not considered an emission), start the second accumulative stopwatch; stop the watch when the emission stops. Continue this procedure for the entire observation period. The

accumulated elapsed time on this stopwatch is the total time emissions were visible during the observation period (*i.e.*, the emission time.)

11.4.2 Observation Period. Choose an observation period of sufficient length to meet the requirements for determining compliance with the emission standard in the applicable subpart of the regulations. When the length of the observation period is specifically stated in the applicable subpart, it may not be necessary to observe the source for this entire period if the emission time required to indicate noncompliance (based on the specified observation period) is observed in a shorter time period. In other words, if the regulation prohibits emissions for more than 6 minutes in any hour, then observations may (optional) be stopped after an emission time of 6 minutes is exceeded. Similarly, when the regulation is expressed as an emission frequency and the regulation prohibits emissions for greater than 10 percent of the time in any hour, then observations may (optional) be terminated after 6 minutes of emission are observed since 6 minutes is 10 percent of an hour. In any case, the observation period shall not be less than 6 minutes in duration. In some cases, the process operation may be intermittent or cyclic. In such cases, it

may be convenient for the observation period to coincide with the length of the process cycle.

11.4.3 Observer Rest Breaks. Do not observe emissions continuously for a period of more than 15 to 20 minutes without taking a rest break. For sources requiring observation periods of greater than 20 minutes, the observer shall take a break of not less than 5 minutes and not more than 10 minutes after every 15 to 20 minutes of observation. If continuous observations are desired for extended time periods, two observers can alternate between making observations and taking breaks.

11.5 Recording Observations. Record the accumulated time of the observation period on the data sheet as the observation period duration. Record the accumulated time emissions were observed on the data sheet as the emission time. Record the clock time the observation period began and ended, as well as the clock time any observer breaks began and ended.

12.0 Data Analysis and Calculations.

If the applicable subpart requires that the emission rate be expressed as an emission frequency (in percent), determine this value as follows: Divide the accumulated emission time (in seconds) by the duration of the observation period (in seconds) or by any minimum

observation period required in the applicable subpart, if the actual observation period is less than the required period, and multiply this quotient by 100.

13.0 Method Performance. [Reserved]

14.0 Pollution Prevention. [Reserved]

15.0 Waste Management. [Reserved]

16.0 References.

1. Missan, R., and A. Stein. Guidelines for Evaluation of Visible Emissions Certification, Field Procedures, Legal Aspects, and Background Material. EPA Publication No. EPA-340/1-75-007. April 1975.

2. Wohlschlegel, P., and D.E. Wagoner. Guideline for Development of a Quality Assurance Program: Volume IX--Visual Determination of Opacity Emissions from Stationary Sources. EPA Publication No. EPA-650/4-74-005i. November 1975.

17.0 Tables, Diagrams, Flowcharts, and Validation Data.

FUGITIVE OR SMOKE EMISSION INSPECTION
OUTDOOR LOCATION

Company Location Company Rep.	Observer Affiliation Date
Sky Conditions Precipitation	Wind Direction Wind Speed
Industry	Process Unit

Sketch process unit: indicate observer position relative to source; indicate potential emission points and/or actual emission points.

OBSERVATIONS	Clock Time	Observation period duration, min:sec	Accumulated emission time, min:sec
Begin Observation			
End Observation			

Figure 22-1

FUGITIVE OR SMOKE EMISSION INSPECTION
INDOOR LOCATION

Company Location Company Rep.	Observer Affiliation Date
Industry	Process Unit

Light type (fluorescent, incandescent, natural)
Light location (overhead, behind observer, etc.)
Illuminance (lux or footcandles)
Sketch process unit: indicate observer position relative to source; indicate potential emission points and/or actual emission points.

OBSERVATIONS	Clock Time	Observation period duration, min:sec	Accumulated emission time, min:sec
Begin			
End Observation			

Figure 22-2

Prepared by Emission Measurement Branch
Technical Support Division, OAQPS, EPA

EMTIC TM-009
October 25, 1990

Method 9 - Visual Determination of the Opacity of Emissions from Stationary Sources

INTRODUCTION

(a) Many stationary sources discharge visible emissions into the atmosphere; these emissions are usually in the shape of a plume. This method involves the determination of plume opacity by qualified observers. The methods includes procedures for the training and certification of observers and procedures to be used in the field for determination of plume opacity.

(b) The appearance of a plume as viewed by an observer depends upon a number of variables, some of which may be controllable in the field. Variables which can be controlled to an extent to which they no longer exert a significant influence upon plume appearance include: angle of the observer with respect to the plume; angle of the observer with respect to the sun; point of observation of attached and detached steam plume; and angle of the observer with respect to a plume emitted from a rectangular stack with a large length to width ratio. The method includes specific criteria applicable to these variables.

(c) Other variables which may not be controllable in the field are luminescence and color contrast between the plume and the background against which the plume is viewed. These variables exert an influence upon the appearance of a plume as viewed by an observer and can affect the ability of the observer to assign accurately opacity values to the observed plume. Studies of the theory of plume opacity and field studies have demonstrated that a plume is most visible and presents the greatest apparent opacity when viewed against a contrasting background. Accordingly, the opacity of a plume viewed under conditions where a contrasting background is present can be assigned with the greatest degree of accuracy. However, the potential for a positive error is also the greatest when a plume is viewed under such contrasting conditions. Under conditions presenting a less contrasting background, the apparent opacity of a plume is less and approaches zero as the color and luminescence contrast decrease toward zero. As a result, significant negative bias and negative errors can be made when a plume is viewed under less contrasting conditions. A negative bias decreases rather than increases the possibility that a plant operator will be incorrectly cited for a violation of opacity standards as a result of observer error.

(d) Studies have been undertaken to determine the magnitude of positive errors made by qualified observers while reading plumes under contrasting conditions and using the procedures set forth in this method. The results of these studies (field trials) which involve a total of 769 sets of 25 readings each are as follows:

(1) For black plumes (133 sets at a smoke generator), 100 percent of the sets were read with a positive error of less than 7.5 percent opacity; 99 percent were read with a positive error of less than 5 percent opacity. (Note: For a set, positive error = average opacity determined by observers' 25 observations -average opacity determined from transmissometer's 25 recordings.)

(2) For white plumes (170 sets at a smoke generator, 168 sets at a coal-fired power plant, 298 sets at a sulfuric acid plant), 99 percent of the sets were

read with a positive error of less than 7.5 percent opacity; 95 percent were read with a positive error of less than 5 percent opacity.

(e) The positive observational error associated with an average of twenty-five readings is therefore established. The accuracy of the method must be taken into account when determining possible violations of applicable opacity standards.

1. PRINCIPLE AND APPLICABILITY

1.1 Principle. The opacity of emissions from stationary sources is determined visually by a qualified observer.

1.2 Applicability. This method is applicable for the determination of the opacity of emissions from stationary sources pursuant to § 60.11(b) and for visually determining opacity of emissions.

2. PROCEDURES

The observer qualified in accordance with Section 3 of this method shall use the following procedures for visually determining the opacity of emissions.

2.1 Position. The qualified observer shall stand at a distance sufficient to provide a clear view of the emissions with the sun oriented in the 140° sector to his back. Consistent with maintaining the above requirement, the observer shall, as much as possible, make his observations from a position such that his line of vision is approximately perpendicular to the plume direction and, when observing opacity of emissions from rectangular outlets (e.g., roof monitors, open baghouses, noncircular stacks), approximately perpendicular to the longer axis of the outlet. The observer's line of sight should not include more than one plume at a time when multiple stacks are involved, and in any case the observer should make his observations with his line of sight perpendicular to the longer axis of such a set of multiple stacks (e.g., stub stacks on baghouses).

2.2 Field Records. The observer shall record the name of the plant, emission location, facility type, observer's name and affiliation, and the date on a field data sheet (Figure 9-1). The time, estimated distance to the emission location, approximate wind direction, estimated wind speed, description of the sky condition (presence and color of clouds), and plume background are recorded on a field data sheet at the time opacity readings are initiated and completed.

Figure 9-1. Record of visual determination of opacity.

Company_____

Location_____

Test No._____

Date_____

Type Facility_____

Control Device_____

Hours of Observation_____

Observer_____

Observer Certification Date_____

Point of Emissions_____

Observer Affiliation_____

Height of Discharge Point____

CLOCK TIME	Initial			Final
OBSERVER LOCATION				
Distance to discharge				
Direction from discharge				
Height of observation point				
BACKGROUND DESCRIPTION				
WEATHER CONDITIONS				
Wind Direction				
Wind Speed				
Ambient Temperature				
SKY CONDITIONS (clear, overcast, % clouds, etc.).				
PLUME DESCRIPTION				
Color				
Distance Visible				
OTHER INFORMATION				

SUMMARY OF AVERAGE OPACITY

Set Number	Time	Opacity	
	Start - End	Sum	Average

Readings ranged from ___ to ___ % opacity.

The source was/was not in compliance with ___ at the time evaluation was made.

Figure 9-2. Observation record.

Page ___ of ___

Company _____ Observer _____

Location _____ Type facility _____

Test Number _____ Point of emissions _____

Seconds						Steam plume (check if applicable)		Comments
Hr	Min	0	15	30	45	Attached	Detached	
	0							
	1							
	2							
	3							
	4							
	5							
	6							
	7							
	8							
	9							
	10							
	11							
	12							
	13							
	14							
	15							
	16							
	17							
	18							
	19							
	20							
	21							
	22							
	23							
	24							
	25							
	26							
	27							
	28							
	29							

Figure 9-2. Observation record (continued).

Page ___ of ___

Company _____ Observer _____

Location _____ Type facility _____

Test Number _____ Point of emissions _____

		Seconds				Steam plume (check if applicable)		Comments
Hr	Min	0	15	30	45	Attached	Detached	
	30							
	31							
	32							
	33							
	34							
	35							
	36							
	37							
	38							
	39							
	40							
	41							
	42							
	43							
	44							
	45							
	46							
	47							
	48							
	49							
	50							
	51							
	52							
	53							
	54							
	55							
	56							
	57							
	58							
	59							

2.3 Observations. Opacity observations shall be made at the point of greatest opacity in that portion of the plume where condensed water vapor is not present. The observer shall not look continuously at the plume but instead shall observe the plume momentarily at 15-second intervals.

2.3.1 Attached Steam Plumes. When condensed water vapor is present within the plume as it emerges from the emission outlet, opacity observations shall be made beyond the point in the plume at which condensed water vapor is no longer visible. The observer shall record the approximate distance from the emission outlet to the point in the plume at which the observations are made.

2.3.2 Detached Steam Plume. When water vapor in the plume condenses and becomes visible at a distinct distance from the emission outlet, the opacity of emissions should be evaluated at the emission outlet prior to the condensation of water vapor and the formation of the steam plume.

2.4 Recording Observations. Opacity observations shall be recorded to the nearest 5 percent at 15-second intervals on an observational record sheet. (See Figure 9-2 for an example.) A minimum of 24 observations shall be recorded. Each momentary observation recorded shall be deemed to represent the average opacity of emissions for a 15-second period.

2.5 Data Reduction. Opacity shall be determined as an average of 24 consecutive observations recorded at 15-second intervals. Divide the observations recorded on the record sheet into sets of 24 consecutive observations. A set is composed of any 24 consecutive observations. Sets need not be consecutive in time and in no case shall two sets overlap. For each set of 24 observations, calculate the average by summing the opacity of the 24 observations and dividing this sum by 24. If an applicable standard specifies an averaging time requiring more than 24 observations, calculate the average for all observations made during the specified time period. Record the average opacity on a record sheet. (See Figure 9-1 for an example.)

3. QUALIFICATION AND TESTING

3.1 Certification Requirements. To receive certification as a qualified observer, a candidate must be tested and demonstrate the ability to assign opacity readings in 5 percent increments to 25 different black plumes and 25 different white plumes, with an error not to exceed 15 percent opacity on any one reading and average error not to exceed 7.5 percent opacity in each category. Candidates shall be tested according to the procedures described in Section 3.2. Smoke generators used pursuant to Section 3.2 shall be equipped with a smoke meter which meets the requirements of Section 3.3. The certification shall be valid for a period of 6 months, at which time the qualification procedure must be repeated by any observer in order to retain certification.

3.2 Certification Procedure. The certification test consists of showing the candidate a complete run of 50 plumes--25 black plumes and 25 white plumes-generated by a smoke generator. Plumes within each set of 25 black and 25 white runs shall be presented in random order. The candidate assigns an opacity value to each plume and records his observation on a suitable form. At the completion of each run of 50 readings, the score of the candidate is determined. If a candidate fails to qualify, the complete run of 50 readings must be repeated in any retest. The smoke test may be administered as part of a smoke school or training program and may be preceded by training or familiarization runs of the smoke generator during which candidates are shown black and white plumes of known opacity.

3.3 Smoke Generator Specifications. Any smoke generator used for the purposes of Section 3.2 shall be equipped with a smoke meter installed to measure opacity across

the diameter of the smoke generator stack. The smoke meter output shall display in-stack opacity based upon a pathlength equal to the stack exit diameter, on a full 0 to 100 percent chart recorder scale. The smoke meter optical design and performance shall meet the specifications shown in Table 91. The smoke meter shall be calibrated as prescribed in Section 3.3.1 prior to the conduct of each smoke reading test. At the completion of each test, the zero and span drift shall be checked and if the drift exceeds ±1 percent opacity, the condition shall be corrected prior to conducting any subsequent test runs. The smoke meter shall be demonstrated, at the time of installation, to meet the specifications listed in Table 9-1. This demonstration shall be repeated following any subsequent repair or replacement of the photocell or associated electronic circuitry including the chart recorder or output meter, or every 6 months, whichever occurs first.

TABLE 9-1 - SMOKE METER DESIGN AND PERFORMANCE SPECIFICATIONS

Parameter	Specification
a. Light Source	Incandescent lamp operated at nominal rated voltage
b. Spectral reponse of photocell	Photopic (daylight spectral response of the human eye - Citation 3)
c. Angle of view	15° maximum total angle
d. Angle of projection	15° maximum total angle
e. Calibration error	±3% opacity, maximum
f. Zero and span drift	±1% opacity, 30 minutes
g. Response time	5 seconds

3.3.1 Calibration. The smoke meter is calibrated after allowing a minimum of 30 minutes warmup by alternately producing simulated opacity of 0 percent and 100 percent. When stable response at 0 percent or 100 percent is noted, the smoke meter is adjusted to produce an output of 0 percent or 100 percent, as appropriate. This calibration shall be repeated until stable 0 percent and 100 percent opacity values may be produced by alternately switching the power to the light source on and off while the smoke generator is not producing smoke.

3.3.2 Smoke Meter Evaluation. The smoke meter design and performance are to be evaluated as follows:

3.3.2.1 Light Source. Verify from manufacturer's data and from voltage measurements made at the lamp, as installed, that the lamp is operated within ±5 percent of the nominal rated voltage.

3.3.2.2 Spectral Response of Photocell. Verify from manufacturer's data that the photocell has a photopic response; i.e., the spectral sensitivity of the cell shall closely approximate the standard spectral-luminosity in (b) of Table 91.

3.3.2.3 Angle of View. Check construction geometry to ensure that the total angle of view of the smoke plume, as seen by the photocell, does not exceed 15°. The total angle of view may be calculated from: $\grave{E} = 2 \tan^{-1} (d/2L)$, where $\grave{E}$ = total angle of

view; d = the sum of the photocell diameter + the diameter of the limiting aperture; and L = the distance from the photocell to the limiting aperture. The limiting aperture is the point in the path between the photocell and the smoke plume where the angle of view is most restricted. In smoke generator smoke meters this is normally an orifice plate.

3.3.2.4 Angle of Projection. Check construction geometry to ensure that the total angle of projection of the lamp on the smoke plume does not exceed 15°. The total angle of projection may be calculated from: $\grave{E} = 2 \tan^{-1} (d/2L)$, where $\grave{E}$ = total angle of projection; d = the sum of the length of the lamp filament + the diameter of the limiting aperture; and L = the distance from the lamp to the limiting aperture.

3.3.2.5 Calibration Error. Using neutral-density filters of known opacity, check the error between the actual response and the theoretical linear response of the smoke meter. This check is accomplished by first calibrating the smoke meter according to Section 3.3.1 and then inserting a series of three neutral-density filters of nominal opacity of 20, 50, and 75 percent in the smoke meter pathlength. Filters calibrated within 2 percent shall be used. Care should be taken when inserting the filters to prevent stray light from affecting the meter. Make a total of five nonconsecutive readings for each filter. The maximum error on any one reading shall be 3 percent opacity.

3.3.2.6 Zero and Span Drift. Determine the zero and span drift by calibrating and operating the smoke generator in a normal manner over a 1-hour period. The drift is measured by checking the zero and span at the end of this period.

3.3.2.7 Response Time. Determine the response time by producing the series of five simulated 0 percent and 100 percent opacity values and observing the time required to reach stable response. Opacity values of 0 percent and 100 percent may be simulated by alternately switching the power to the light source off and on while the smoke generator is not operating.

4. BIBLIOGRAPHY

1. Air Pollution Control District Rules and Regulations, Los Angeles County Air Pollution Control District, Regulation IV, Prohibitions, Rule 50.

2. Weisburd, Melvin I., Field Operations and Enforcement Manual for Air, U.S. Environmental Protection Agency, Research Triangle Park, NC, APTD-1100, August 1972, pp. 4.1-4.36.

3. Condon. E.U., and Odishaw, H., Handbook of Physics, McGraw-Hill Co., New York, NY, 1958, Table 3.1, p. 6-52.

This page is left blank intentionally.