ARIZONA DEPARTMENT OF ENVIRONMENTAL QUALITY

Air Quality Division

1110 W. Washington Street • Phoenix, AZ 85007 • Phone: (602) 771-2316

AIR QUALITY CONTROL PERMIT

(As required by Title 49, Chapter 3, Article 2, Section 49-426, Arizona Revised Statutes)

This air quality control permit does not relieve applicant of responsibility for meeting all air pollution regulations

1. PERMIT TO BE ISSUED TO (Business license name of organization that is to receive permit) **CalPortland Company**

2. NAME (OR NAMES) OF OWNER OR PRINCIPALS DOING BUSINESS AS THE ABOVE ORGANIZATION **CalPortland Company**

3. MAILING ADDRESS **P.O. Box 338**
Rillito, AZ 85654-0338

4. ORIGINAL EQUIPMENT LOCATION/ADDRESS **11115 N. Casa Grande Highway**
Rillito, Pima County, AZ 85654

5. FACILITIES OR EQUIPMENT DESCRIPTION ***Portland Cement Manufacturing Facility***

6. THIS PERMIT ISSUED SUBJECT TO THE FOLLOWING ***Conditions contained in Attachments "A", "B", and "C"***

7. ADEQ PERMIT NUMBER **47259** PERMIT CLASS **Class I**

EXPIRATION DATE _____

PERMIT ISSUED THIS _____ DAY OF _____ **, 2010**

Ira Domsky, Acting Director, Air Quality Division

SIGNATURE TITLE

ARIZONA DEPARTMENT OF ENVIRONMENTAL QUALITY

AIR QUALITY CLASS I PERMIT

COMPANY: ***CalPortland Company***
FACILITY: ***Rillito Cement Plant***
PERMIT #: ***47259***
DATE ISSUED: **June 1, 2010**
EXPIRY DATE: **June 1, 2015**

SUMMARY

This Title V renewal permit is issued to CalPortland Company, the Permittee, for the continued operation of the Rillito Cement Plant (including the quarry and the Twin Peaks Rock crushing and screening plant) at 11115 Casa Grande Highway, Rillito, Pima County, Arizona.

The potential to emit for particulate matter (PM), particulate matter less than 10 microns (PM_{10}), nitrogen oxides (NO_x), carbon monoxide (CO), sulfur dioxide (SO_2) and total hazardous air pollutants (HAPs) for the facility are greater than the major source thresholds. Thus, the facility is classified as a Major Source as defined in the Arizona Administrative Code (A.A.C.) R18-2-101(64), and requires a Class I permit in accordance with A.A.C. R18-2-302.B.1.a.

This permit is issued in accordance with Title V of the Clean Air Act, and Title 49, Chapter 3 of the Arizona Revised Statutes (ARS). Air emissions are governed by regulations drawn from the A.A.C., Arizona State Implementation Plan (AZSIP), and Title 40 of the Code of Federal Regulations (CFR). All terms and conditions of this permit are federally enforceable under the Clean Air Act, except those specifically designated as "State Enforceable Conditions."

TABLE OF CONTENTS

ATTACHMENT "A": GENERAL PROVISIONS…… 4
I. PERMIT EXPIRATION AND RENEWAL…….....4
II. COMPLIANCE WITH PERMIT CONDITIONS……4
III. PERMIT REVISION, REOPENING, REVOCATION ANR REISSUANCE, OR TERMINATION FOR CAUSE…….....4
IV. POSTING OF PERMIT…….....5
V. FEE PAYMENT……... 5
VI. ANNUAL EMISSION INVENTORY QUESTIONNAIRE…… 5
VII. COMPLINACE CERTIFICATION ……...……. 5
VIII. CERTIFICATION OF TRUTH, ACCURACY, AND COMPLETENESS…… 6
IX. INSPECTION AND ENTRY……... 6
X. PERMIT REVISION PURSUANT TO FEDERAL HAZARDOUS AIR POLLUTANT STANDARD…….....6
XI. ACCIDENTAL RELEASE PROGRAM…….....6
XII. EXCESS EMISSIONS, PERMIT DEVIATIONS, AND EMERGENCY REPORTING….....7
XIII. RECORD KEEPING REQUIREMENTS……... 11
XIV. REPORTING REQUIREMENTS……... 11
XV. DUTY TO PROVIDE INFORMATION…….....11
XVI. PERMIT AMENDMENT OR REVISION…….....11
XVII. FACILITY CHANGE WITHOUR REVISION…… 12
XVIII. TESTING REQUIREMENTS…….....13
XIX. PROPERTY RIGHTS…….....14
XX. SEVERABILITY CLAUSE……... 14
XXI. PERMIT SHIELD…….....14
XXII. PROTECTION OF STRATSPHERIC OZONE…….....14
ATTACHMENT "B" FACILITY WIDE REQUIREMENTS …… 15
I. GENERAL FACILITY WIDE REQUIREMENTS …….…… 15
II. FUGITIVE DUST EMISSIONS …..…… 15
III. ROCK CRUSHING & SCREENING ACTIVITIES……..22
IV. FUEL BURNING EQUIPMENT …….…… 26
V. GASOLINE STORAGE TANK …….…… 27
VI. DIESEL/USED OIL TANKS …….…… 28
VII. PORTABLE GRIZZLY SCREEN FOR IRON/CLINKER..... 29
VIII. MOBILE SOURCE REQUIREMENTS..... 30
IX. OTHER PERIODIC ACTIVITY REQUIREMENTS …….…… 31
X. AMBIENT MONITORING …….…… 34

ATTACHMENT "C" SPECIFIC PROVISIONS (K1-K4).....39
I. DUST CONTROL REQUIREMENTS …….…… 39
II. GENERAL REQUIREMENTS …..…….....39
III. QUARRY, LIMESTONE AND OTHER MATERIAL HANDLING…….. .45
IV. COAL MILL SYSTEM …….…….....49
V. KILNS AND CLINKER COOLERS …….…… 51
VI. OTHER SYSTEMS SUBJECT TO 40 CFR 63 SUBPART LLL…….……60
VII. SECONDARY MATERIAL UTILIZATION PROCEDURE..... 65
VIII. AUXILLARY ENGINES.....68
IX. ALTERNATE RAW MATERIAL SCREENING ASSESSMENT.....70
ATTACHMENT "D" SPECIFIC PROVISIONS (K6)..... 75
I. DUST CONTROL REQUIREMENTS …….…… 75
II. QUARRY, LIMESTONE AND OTHER MATERIAL HANDLING…….. .76
III. COAL PREPARATION PLANT…….…….....84
IV. KILN 6, RAW MILL AND CLINKER COOLER …….……..93
V. OTHER SYSTEMS SUBJECT TO 40 CFR 63 SUBPART LLL…….……116
VI. EMERGENCY GENERATOR..... 140
ATTACHMENT "E" EQUIPMENT LIST (K1-K4).....145
ATTACHMENT "F" EQUIPMENT LIST (K6)..... 169
APPENDIX-1: DUST CONTROL PLAN (K1-K4
APPENDIX -2: O&M PLAN (K1-K4

ATTACHMENT "A": GENERAL PROVISIONS
AIR QUALITY CONTROL PERMIT NO. 47259
FOR
CALPORTLAND COMPANY - RILLITO CEMENT PLANT

I. PERMIT EXPIRATION AND RENEWAL [ARS § 49-426.F, A.A.C. R18-2-304.C.2, and -306.A.1]

A. This permit is valid for a period of five years from the date of issuance.

B. The Permittee shall submit an application for renewal of this permit at least 6 months, but not more than 18 months, prior to the date of permit expiration.

II. COMPLIANCE WITH PERMIT CONDITIONS [A.A.C. R18-2-306.A.8.a and b]

A. The Permittee shall comply with all conditions of this permit including all applicable requirements of the Arizona air quality statutes and air quality rules. Any permit noncompliance constitutes a violation of the Arizona Revised Statutes and is grounds for enforcement action; for permit termination, revocation and reissuance, or revision; or for denial of a permit renewal application. In addition, noncompliance with any federally enforceable requirement constitutes a violation of the Clean Air Act.

B. It shall not be a defense for a Permittee in an enforcement action that it would have been necessary to halt or reduce the permitted activity in order to maintain compliance with the conditions of this permit.

III. PERMIT REVISION, REOPENING, REVOCATION AND REISSUANCE, OR TERMINATION FOR CAUSE [A.A.C. R18-2-306.A.8.c, -321.A.1, and -321.A.2]

A. The permit may be revised, reopened, revoked and reissued, or terminated for cause. The filing of a request by the Permittee for a permit revision, revocation and reissuance, termination, or of a notification of planned changes or anticipated noncompliance does not stay any permit condition.

B. The permit shall be reopened and revised under any of the following circumstances:

1. Additional applicable requirements under the Clean Air Act become applicable to the Class I source. Such a reopening shall only occur if there are three or more years remaining in the permit term. The reopening shall be completed no later than 18 months after promulgation of the applicable requirement. No such reopening is required if the effective date of the requirement is later than the date on which the permit is due to expire, unless an application for renewal has been submitted pursuant to A.A.C. R18-2-322.B. Any permit revision required pursuant to this subparagraph shall comply with the provisions in A.A.C. R18-2-322 for permit renewal and shall reset the five-year permit term.

2. Additional requirements, including excess emissions requirements, become applicable to an affected source under the acid rain program. Upon approval by the Administrator, excess emissions offset plans shall be deemed to be incorporated into the Class I permit.

3. The Director or the Administrator determines that the permit contains a material mistake or that inaccurate statements were made in establishing the emissions standards or other terms or conditions of the permit.

4. The Director or the Administrator determines that the permit needs to be revised or revoked to assure compliance with the applicable requirements.

C. Proceedings to reopen and reissue a permit, including appeal of any final action relating to a permit reopening, shall follow the same procedures as apply to initial permit issuance and shall, except for reopenings under Condition III.B.1 above, affect only those parts of the permit for which cause to reopen exists. Such reopenings shall be made as expeditiously as practicable. Permit reopenings for reasons other than those stated in Condition III.B.1 above shall not result in a resetting of the five-year permit term.

IV. POSTING OF PERMIT [A.A.C. R18-2-315]

A. The Permittee shall post this permit or a certificate of permit issuance where the facility is located in such a manner as to be clearly visible and accessible. All equipment covered by this permit shall be clearly marked with one of the following:

1. Current permit number; or

2. Serial number or other equipment ID number that is also listed in the permit to identify that piece of equipment.

B. A copy of the complete permit shall be kept on site.

V. FEE PAYMENT [A.A.C. R18-2-306.A.9 and -326]

The Permittee shall pay fees to the Director pursuant to ARS § 49-426(E) and A.A.C. R18-2-326.

VI. ANNUAL EMISSION INVENTORY QUESTIONNAIRE [A.A.C. R18-2-327.A and B]

A. The Permittee shall complete and submit to the Director an annual emissions inventory questionnaire. The questionnaire is due by March 31st or ninety days after the Director makes the inventory form available each year, whichever occurs later, and shall include emission information for the previous calendar year.

B. The questionnaire shall be on a form provided by the Director and shall include the information required by A.A.C. R18-2-327.

VII. COMPLIANCE CERTIFICATION [A.A.C. R18-2-309.2.a, -309.2.c-d, and -309.5.d]

A. The Permittee shall submit a compliance certification to the Director semiannually which describes the compliance status of the source with respect to each permit condition. The certifications shall be submitted no later than February 15th and August 15th. The February 15th compliance certification shall report the compliance status of the source during the period between July 1st and December 31st of the previous year. The August 15th compliance certification shall report the compliance status of the source during the period between January 1st and June 30th of the current year.

The compliance certifications shall include the following:

1. Identification of each term or condition of the permit that is the basis of the certification;

2. Identification of the methods or other means used by the Permittee for determining the compliance status with each term and condition during the certification period;

3. The status of compliance with the terms and conditions of the permit for the period covered by the certification, including whether compliance during the period was continuous or intermittent. The certification shall be based on the methods or means

designated in Condition VII.A.2 above. The certifications shall identify each deviation and take it into account for consideration in the compliance certification;

4. For emission units subject to 40 CFR Part 64, the certification shall also identify as possible exceptions to compliance any period during which compliance is required and in which an excursion or exceedance defined under 40 CFR Part 64 occurred;

5. All instances of deviations from permit requirements reported pursuant to Condition XII.B of this Attachment; and

6. Other facts the Director may require to determine the compliance status of the source.

B. A copy of all compliance certifications shall also be submitted to the EPA Administrator.

C. If any outstanding compliance schedule exists, a progress report shall be submitted with the semi-annual compliance certifications required in Condition VII.A above.

VIII. CERTIFICATION OF TRUTH, ACCURACY AND COMPLETENESS [A.A.C. R18-2-304.H]

Any document required to be submitted by this permit, including reports, shall contain a certification by a responsible official of truth, accuracy, and completeness. This certification shall state that, based on information and belief formed after reasonable inquiry, the statements and information in the document are true, accurate, and complete.

IX. INSPECTION AND ENTRY [A.A.C. R18-2-309.4]

Upon presentation of proper credentials, the Permittee shall allow the Director or the authorized representative of the Director to:

A. Enter upon the Permittee's premises where a source is located, emissions-related activity is conducted, or where records are required to be kept under the conditions of the permit;

B. Have access to and copy, at reasonable times, any records that are required to be kept under the conditions of the permit;

C. Inspect, at reasonable times, any facilities, equipment (including monitoring and air pollution control equipment), practices, or operations regulated or required under the permit;

D. Sample or monitor, at reasonable times, substances or parameters for the purpose of assuring compliance with the permit or other applicable requirements; and

E. Record any inspection by use of written, electronic, magnetic and photographic media.

X. PERMIT REVISION PURSUANT TO FEDERAL HAZARDOUS AIR POLLUTANT STANDARD [A.A.C. R18-2-304.C]

If this source becomes subject to a standard promulgated by the Administrator pursuant to Section 112(d) of the Act, then the Permittee shall, within twelve months of the date on which the standard is promulgated, submit an application for a permit revision demonstrating how the source will comply with the standard.

XI. ACCIDENTAL RELEASE PROGRAM [40 CFR Part 68]

If this source becomes subject to the provisions of 40 CFR Part 68, then the Permittee shall comply with these provisions according to the time line specified in 40 CFR Part 68.

XII. EXCESS EMISSIONS, PERMIT DEVIATIONS, AND EMERGENCY REPORTING

A. Excess Emissions Reporting [A.A.C. R18-2-310.01.A and -310.01.B]

1. Excess emissions shall be reported as follows:

   a. The Permittee shall report to the Director any emissions in excess of the limits established by this permit. Such report shall be in two parts as specified below:

      i. Notification by telephone or facsimile within 24 hours of the time when the Permittee first learned of the occurrence of excess emissions including all available information from Condition XII.A.1.b below.

      ii. Detailed written notification by submission of an excess emissions report within 72 hours of the notification pursuant to Condition XII.A.1.a.i. above.

   b. The report shall contain the following information:

      i. Identity of each stack or other emission point where the excess emissions occurred;

      ii. Magnitude of the excess emissions expressed in the units of the applicable emission limitation and the operating data and calculations used in determining the magnitude of the excess emissions;

      iii. Date, time and duration, or expected duration, of the excess emissions;

      iv. Identity of the equipment from which the excess emissions emanated;

      v. Nature and cause of such emissions;

      vi. If the excess emissions were the result of a malfunction, steps taken to remedy the malfunction and the steps taken or planned to prevent the recurrence of such malfunctions; and

      vii. Steps taken to limit the excess emissions. If the excess emissions resulted from start-up or malfunction, the report shall contain a list of the steps taken to comply with the permit procedures.

2. In the case of continuous or recurring excess emissions, the notification requirements of this section shall be satisfied if the source provides the required notification after excess emissions are first detected and includes in such notification an estimate of the time the excess emissions will continue. Excess emissions occurring after the estimated time period, or changes in the nature of the emissions as originally reported, shall require additional notification pursuant to Condition XII.A.1 above.

[A.A.C. R18-2-310.01.C]

B. Permit Deviations Reporting [A.A.C. R18-2-306.A.5.b]

The Permittee shall promptly report deviations from permit requirements, including those attributable to upset conditions as defined in the permit, the probable cause of such deviations, and any corrective actions or preventive measures taken. Prompt reporting shall mean that the report was submitted to the Director by certified mail, facsimile, or hand delivery within two working days of the time when emission limitations were exceeded due to an emergency or

within two working days of the time when the owner or operator first learned of the occurrence of a deviation from a permit requirement.

C. Emergency Provision [A.A.C. R18-2-306.E]

1. An "emergency" means any situation arising from sudden and reasonable unforeseeable events beyond the control of the source, including acts of God, that require immediate corrective action to restore normal operation, and that causes the source to exceed a technology-based emission limitation under the permit, due to unavoidable increases in emissions attributable to the emergency. An emergency shall not include noncompliance to the extent caused by improperly designed equipment, lack of preventative maintenance, careless or improper operation, or operator error.

2. An emergency constitutes an affirmative defense to an action brought for noncompliance with such technology-based emission limitations if Condition XII.C.3 is met.

3. The affirmative defense of emergency shall be demonstrated through properly signed, contemporaneous operating logs, or other relevant evidence that:

   a. An emergency occurred and that the Permittee can identify the cause(s) of the emergency;

   b. The permitted facility was being properly operated at the time;

   c. During the period of the emergency, the Permittee took all reasonable steps to minimize levels of emissions that exceeded the emissions standards or other requirements in the permit; and

   d. The Permittee submitted notice of the emergency to the Director by certified mail, facsimile, or hand delivery within two working days of the time when emission limitations were exceeded due to the emergency. This notice shall contain a description of the emergency, any steps taken to mitigate emissions, and corrective action taken.

4. In any enforcement proceeding, the Permittee seeking to establish the occurrence of an emergency has the burden of proof.

5. This provision is in addition to any emergency or upset provision contained in any applicable requirement.

D. Compliance Schedule [ARS § 49-426.I.5]

For any excess emission or permit deviation that cannot be corrected within 72 hours, the Permittee is required to submit a compliance schedule to the Director within 21 days of such occurrence. The compliance schedule shall include a schedule of remedial measures, including an enforceable sequence of actions with milestones, leading to compliance with the permit terms or conditions that have been violated.

E. Affirmative Defenses for Excess Emissions Due to Malfunctions, Startup, and Shutdown [A.A.C. R18-2-310]

1. Applicability

   This rule establishes affirmative defenses for certain emissions in excess of an emission standard or limitation and applies to all emission standards or limitations except for standards or limitations:

a. Promulgated pursuant to Sections 111 or 112 of the Act;

b. Promulgated pursuant to Titles IV or VI of the Clean Air Act;

c. Contained in any Prevention of Significant Deterioration (PSD) or New Source Review (NSR) permit issued by the U.S. EPA;

d. Contained in A.A.C. R18-2-715.F; or

e. Included in a permit to meet the requirements of A.A.C. R18-2-406.A.5.

2. Affirmative Defense for Malfunctions

Emissions in excess of an applicable emission limitation due to malfunction shall constitute a violation. When emissions in excess of an applicable emission limitation are due to a malfunction, the Permittee has an affirmative defense to a civil or administrative enforcement proceeding based on that violation, other than a judicial action seeking injunctive relief, if the Permittee has complied with the reporting requirements of A.A.C. R18-2-310.01 and has demonstrated all of the following:

a. The excess emissions resulted from a sudden and unavoidable breakdown of process equipment or air pollution control equipment beyond the reasonable control of the Permittee;

b. The air pollution control equipment, process equipment, or processes were at all times maintained and operated in a manner consistent with good practice for minimizing emissions;

c. If repairs were required, the repairs were made in an expeditious fashion when the applicable emission limitations were being exceeded. Off-shift labor and overtime were utilized where practicable to ensure that the repairs were made as expeditiously as possible. If off-shift labor and overtime were not utilized, the Permittee satisfactorily demonstrated that the measures were impracticable;

d. The amount and duration of the excess emissions (including any bypass operation) were minimized to the maximum extent practicable during periods of such emissions;

e. All reasonable steps were taken to minimize the impact of the excess emissions on ambient air quality;

f. The excess emissions were not part of a recurring pattern indicative of inadequate design, operation, or maintenance;

g. During the period of excess emissions there were no exceedances of the relevant ambient air quality standards established in Title 18, Chapter 2, Article 2 of the Arizona Administrative Code that could be attributed to the emitting source;

h. The excess emissions did not stem from any activity or event that could have been foreseen and avoided, or planned, and could not have been avoided by better operations and maintenance practices;

i. All emissions monitoring systems were kept in operation if at all practicable; and

j. The Permittee's actions in response to the excess emissions were documented by contemporaneous records.

3. Affirmative Defense for Startup and Shutdown

a. Except as provided in Condition XII.E.3.b below, and unless otherwise provided for in the applicable requirement, emissions in excess of an applicable emission limitation due to startup and shutdown shall constitute a violation. When emissions in excess of an applicable emission limitation are due to startup and shutdown, the Permittee has an affirmative defense to a civil or administrative enforcement proceeding based on that violation, other than a judicial action seeking injunctive relief, if the Permittee has complied with the reporting requirements of A.A.C. R18-2-310.01 and has demonstrated all of the following:

i. The excess emissions could not have been prevented through careful and prudent planning and design;

ii. If the excess emissions were the result of a bypass of control equipment, the bypass was unavoidable to prevent loss of life, personal injury, or severe damage to air pollution control equipment, production equipment, or other property;

iii. The air pollution control equipment, process equipment, or processes were at all times maintained and operated in a manner consistent with good practice for minimizing emissions;

iv. The amount and duration of the excess emissions (including any bypass operation) were minimized to the maximum extent practicable during periods of such emissions;

v. All reasonable steps were taken to minimize the impact of the excess emissions on ambient air quality;

vi. During the period of excess emissions there were no exceedances of the relevant ambient air quality standards established in Title 18, Chapter 2, Article 2 of the Arizona Administrative Code that could be attributed to the emitting source;

vii. All emissions monitoring systems were kept in operation if at all practicable; and

viii. Contemporaneous records documented the Permittee's actions in response to the excess emissions.

b. If excess emissions occur due to a malfunction during routine startup and shutdown, then those instances shall be treated as other malfunctions subject to Condition XII.E.2 above.

4. Affirmative Defense for Malfunctions during Scheduled Maintenance

If excess emissions occur due to a malfunction during scheduled maintenance, then those instances will be treated as other malfunctions subject to Condition XII.E.2 above.

5. Demonstration of Reasonable and Practicable Measures

For an affirmative defense under Condition XII.E.2 or XII.E.3 above, the Permittee shall demonstrate, through submission of the data and information required by Condition XII.E and A.A.C. R18-2-310.01, that all reasonable and practicable measures within the Permittee's control were implemented to prevent the occurrence of the excess emissions.

XIII. RECORD KEEPING REQUIREMENTS [A.A.C. R18-2-306.A.4]

A. The Permittee shall keep records of all required monitoring information including, but not limited to, the following:

1. The date, place as defined in the permit, and time of sampling or measurements;

2. The date(s) analyses were performed;

3. The name of the company or entity that performed the analyses;

4. A description of the analytical techniques or methods used;

5. The results of such analyses; and

6. The operating conditions as existing at the time of sampling or measurement.

B. The Permittee shall retain records of all required monitoring data and support information for a period of at least 5 years from the date of the monitoring sample, measurement, report, or application. Support information includes all calibration and maintenance records and all original strip-chart recordings or other data recordings for continuous monitoring instrumentation, and copies of all reports required by the permit.

C. All required records shall be maintained either in an unchangeable electronic format or in a handwritten logbook utilizing indelible ink.

XIV. REPORTING REQUIREMENTS [A.A.C. R18-2-306.A.5.a]

The Permittee shall submit the following reports:

A. Compliance certifications in accordance with Section VII of Attachment "A".

B. Excess emission; permit deviation, and emergency reports in accordance with Section XII of Attachment "A".

C. Other reports required by any condition of Attachment "B".

XV. DUTY TO PROVIDE INFORMATION [A.A.C. R18-2-304.G and -306.A.8.e]

A. The Permittee shall furnish to the Director, within a reasonable time, any information that the Director may request in writing to determine whether cause exists for revising, revoking and reissuing, or terminating the permit, or to determine compliance with the permit. Upon request, the Permittee shall also furnish to the Director copies of records required to be kept by the permit. For information claimed to be confidential, the Permittee shall furnish an additional copy of such records directly to the Administrator along with a claim of confidentiality.

B. If the Permittee has failed to submit any relevant facts or has submitted incorrect information in the permit application, the Permittee shall, upon becoming aware of such failure or incorrect submittal, promptly submit such supplementary facts or corrected information.

XVI. PERMIT AMENDMENT OR REVISION [A.A.C. R18-2-318, -319, and -320]

The Permittee shall apply for a permit amendment or revision for changes to the facility which do not qualify for a facility change without revision under Section XVII, as follows:

A. Administrative Permit Amendment (A.A.C. R18-2-318);

B. Minor Permit Revision (A.A.C. R18-2-319); and

C. Significant Permit Revision (A.A.C. R18-2-320).

The applicability and requirements for such action are defined in the above referenced regulations.

XVII. FACILITY CHANGE WITHOUT A PERMIT REVISION [A.A.C. R18-2-317]

A. The Permittee may make changes at the permitted source without a permit revision if all of the following apply:

1. The changes are not modifications under any provision of Title I of the Act or under ARS § 49-401.01(24);

2. The changes do not exceed the emissions allowable under the permit whether expressed therein as a rate of emissions or in terms of total emissions;

3. The changes do not violate any applicable requirements or trigger any additional applicable requirements;

4. The changes satisfy all requirements for a minor permit revision under A.A.C.–R18-2-319.A; and

5. The changes do not contravene federally enforceable permit terms and conditions that are monitoring (including test methods), record keeping, reporting, or compliance certification requirements.

B. The substitution of an item of process or pollution control equipment for an identical or substantially similar item of process or pollution control equipment shall qualify as a change that does not require a permit revision, if it meets all of the requirements of Conditions XVII.A and XVII.C of this Attachment.

C. For each change under Conditions XVII.A and XVII.B above, a written notice by certified mail or hand delivery shall be received by the Director and the Administrator a minimum of 7 working days in advance of the change. Notifications of changes associated with emergency conditions, such as malfunctions necessitating the replacement of equipment, may be provided less than 7 working days in advance of the change, but must be provided as far in advance of the change as possible or, if advance notification is not practicable, as soon after the change as possible.

D. Each notification shall include:

1. When the proposed change will occur;

2. A description of the change;

3. Any change in emissions of regulated air pollutants; and

4. Any permit term or condition that is no longer applicable as a result of the change.

E. The permit shield described in A.A.C. R18-2-325 shall not apply to any change made under this Section.

F. Except as otherwise provided for in the permit, making a change from one alternative operating scenario to another as provided under A.A.C. R18-2-306.A.11 shall not require any prior notice under this Section.

G. Notwithstanding any other part of this Section, the Director may require a permit to be revised for any change that, when considered together with any other changes submitted by the same source under this Section over the term of the permit, do not satisfy Condition XVII.A above.

XVIII. TESTING REQUIREMENTS [A.A.C. R18-2-312]

A. The Permittee shall conduct performance tests as specified in the permit and at such other times as may be required by the Director.

B. Operational Conditions during Testing

Tests shall be conducted during operation at the maximum possible capacity of each unit under representative operational conditions unless other conditions are required by the applicable test method or in this permit. With prior written approval from the Director, testing may be performed at a lower rate. Operations during periods of start-up, shutdown, and malfunction (as defined in A.A.C. R18-2-101) shall not constitute representative operational conditions unless otherwise specified in the applicable standard.

C. Tests shall be conducted and data reduced in accordance with the test methods and procedures contained in the Arizona Testing Manual unless modified by the Director pursuant to A.A.C. R18-2-312.B.

D. Test Plan

At least 60 calendar days prior to performing a test required by 40 CFR 63, Subpart LLL, and at least 14 calendar days prior to performing other tests, the Permittee shall submit a test plan to the Director in accordance with A.A.C. R18-2-312.B and the Arizona Testing Manual. This test plan must include the following:

1. Test duration;
2. Test location(s);
3. Test method(s); and
4. Source operation and other parameters that may affect test results.

E. Stack Sampling Facilities

The Permittee shall provide, or cause to be provided, performance testing facilities as follows:

1. Sampling ports adequate for test methods applicable to the facility;
2. Safe sampling platform(s);
3. Safe access to sampling platform(s); and
4. Utilities for sampling and testing equipment.

F. Interpretation of Final Results

Each performance test shall consist of three separate runs using the applicable test method. Each run shall be conducted for the time and under the conditions specified in the applicable standard. For the purpose of determining compliance with an applicable standard, the arithmetic mean of the results of the three runs shall apply. In the event that a sample is accidentally lost or conditions occur in which one of the three runs is required to be discontinued because of forced

shutdown, failure of an irreplaceable portion of the sample train, extreme meteorological conditions, or other circumstances beyond the Permittee's control, compliance may, upon the Director's approval, be determined using the arithmetic mean of the results of the other two runs. If the Director or the Director's designee is present, tests may only be stopped with the Director's or such designee's approval. If the Director or the Director's designee is not present, tests may only be stopped for good cause. Good cause includes: forced shutdown, failure of an irreplaceable portion of the sample train, extreme meteorological conditions, or other circumstances beyond the Permittee's control. Termination of any test without good cause after the first run is commenced shall constitute a failure of the test. Supporting documentation, which demonstrates good cause, must be submitted.

G. Report of Final Test Results

A written report of the results of performance tests conducted pursuant to 40 CFR 63, Subpart LLL shall be submitted to the Director within 60 days after the test is performed. A written report of other performance tests shall be submitted within 30 days after the test is performed. The report shall be submitted in accordance with the Arizona Testing Manual and A.A.C. R18-2-312.A.

XIX. PROPERTY RIGHTS [A.A.C. R18-2-306.A.8.d]

This permit does not convey any property rights of any sort, or any exclusive privilege.

XX. SEVERABILITY CLAUSE [A.A.C. R18-2-306.A.7]

The provisions of this permit are severable. In the event of a challenge to any portion of this permit, or if any portion of this permit is held invalid, the remaining permit conditions remain valid and in force.

XXI. PERMIT SHIELD [A.A.C. R18-2-325]

Compliance with the conditions of this permit shall be deemed compliance with all applicable requirements identified in the portions of this permit subtitled "Permit Shield". The permit shield shall not apply to minor revisions pursuant to Condition XVI.B of this Attachment and any facility changes without a permit revision pursuant to Section XVII of this Attachment.

XXII. PROTECTION OF STRATOSPHERIC OZONE [40 CFR Part 82]

If this source becomes subject to the provisions of 40 CFR Part 82, then the Permittee shall comply with these provisions accordingly.

ATTACHMENT "B": FACITYWIDE REQUIREMENTS
AIR QUALITY CONTROL PERMIT NO. 47259
FOR
CALPORTLAND COMPANY - RILLITO CEMENT PLANT

I. GENERAL FACILITYWIDE REQUIREMENTS

A. The Permittee shall have on site or on call a person that is certified in EPA Reference Method 9. [A.A.C. R18-2-306.A.3.c]

B. At the time that the compliance certifications required by Section VII of Attachment "A" are submitted, the Permittee shall submit reports of all monitoring activities required by this permit, performed in the same six month period as applies to the compliance certification period. [A.A.C. R18-2-306.A.5.a]

C. The conditions of this Attachment shall apply to equipment identified in Attachments "E" and "F" of this Permit. In the event that after the date of permit issuance, the Permittee identifies equipment existing at the plant at the time of permit issuance, but not included in the permit application for this permit, or if the Permittee identifies errors in Attachments "E" and "F" of this Permit, the Permittee shall follow the appropriate administrative procedures as set forth in Article 3 of Title 18, Chapter 2 of the Arizona Administrative Code to include such equipment in the permit or to correct such errors**.** [A.A.C. R18-2-304.G]

D. The following conditions apply to existing sources, as that term is defined in A.A.C. R18-2-101, that are not otherwise subject to standards of performance under A.A.C. Title 18, Chapter 2, Articles 7, 9, or 11.

1. The Permittee shall not cause, allow, or permit gaseous or odorous materials to be emitted from equipment, operations or premises under its control in such quantities or concentrations as to cause air pollution. [A.A.C. R18-2-730.D]

2. Where a stack, vent or other outlet is at such a level that fumes, gas mist, odor, smoke, vapor or any combination thereof constituting air pollution is discharged to adjoining property, the Director may require the installation of abatement equipment or the alteration of such stack, vent, or other outlet by the owner or operator thereof to a degree that will adequately dilute, reduce or eliminate the discharge of air pollution to adjoining property.

[A.A.C. R18-2-730.G]

E. Termination of Authority to Operate Kilns 1, 2, 3, 4

The Permittee shall permanently cease operation of Kilns 1, 2, 3, and 4 on or before the date Kiln 6 becomes operational, as provided by Section IV of Attachment "D" to this permit.
[A.A.C. R18-2-306.01 and A.A.C. R18-2-331.A.3.a]
[Material permit conditions are indicated by underline and italics]

II. FUGITIVE DUST EMISSIONS

A. Applicability

This Section applies to any source of fugitive dust in the facility.

B. Emission Limits and Standards

1. Requirements for Fugitive Dust Sources

a. Opacity of emissions from any fugitive dust non-point source shall not be greater than 40% measured in accordance with the Arizona Testing Manual, Reference Method 9. [A.A.C. R18-2-614]

b. The Permittee shall not cause, allow or permit visible emissions from any fugitive dust point source, in excess of 20 percent opacity.
[A.A.C-R18-2-702.B]

c. Work Practice Requirements

The Permittee shall prevent excessive amounts of particulate matter from becoming airborne by employing reasonable precautions such as the following:

(1) Use dust suppressants, adhesive soil stabilizer, wetting agents, paving, covering, detouring, revegetation, hydro-seeding, hydro-mulching, mulching, sweeping, wet drilling, vacuuming, wind fence, wind break, shrouding, skirting, enclosing, contouring, animals, compaction, agglomeration, stemming, dust collectors, or encrustation on, or bar access to open areas, or employ or optimize blast pattern, or control oxygen balance of explosives during blast operations, or minimize material drop height, or control vehicle access, or limit vehicle speed during construction operations, repair operations, demolition activities, clearing operations, and leveling operations, or when any earth is moved or excavated.
[A.A.C. R18-2-604.A]

(2) Use dust suppressants, adhesive soil stabilizer, or paving, or bar access to, driveways, parking areas, and vacant lots where motor vehicular activity occurs. [A.A.C. R18-2-604.B]

(3) Use dust suppressants, adhesive soil stabilizer, wetting agents, paving, covering, detouring, revegetation, hydro-seeding, hydro-mulching, mulching, sweeping, wet drilling, vacuuming, wind fence, wind break, usage of decomposed granite, crushed aggregate, compaction, agglomeration, or encrustation on, or limit vehicle speed on, or control vehicle access to, when a roadway is repaired, constructed, or reconstructed. [A.A.C. R18-2-605.A]

(4) Use dust suppressants, spray bars, hoods, wetting agents, wind break, covering, agglomeration, or encrustation on, or minimize material drop height, or limit vehicle speed, or cover the load adequately when transporting material likely to give rise to airborne dust.
[A.A.C. R18-2-605.B]

(5) Use dust suppressants, adhesive soil stabilizer, wetting agents, spray bars, hoods, covering, wind fences, wind breaks, shrouding, skirting, enclosing, contouring, agglomeration, dust collectors, or encrustation on, or minimize material drop height, when crushing, handling, or conveying material that is likely to give rise to airborne dust. [A.A.C. R18-2-606]

(6) Adequately cover, or use dust suppressants, wetting agents, chemical stabilization, wind fences, wind breaks, shrouding, skirting, enclosing, contouring, agglomeration, compaction, rolling, dust collectors, or encrustation when stacking, piling, or otherwise storing organic or inorganic dust producing material. [A.A.C. R18-2-607.A]

(7) Operate stacking and reclaiming machinery utilized at storage piles at all times with a minimum fall of material or with the use of spray bars and wetting agents. [A.A.C. R18-2-607.B]

(8) For Kiln 6 configuration, all outdoor storage piles in which the stored material is a raw material with a silt content above 10 percent as stockpiled, wind screens shall be used. [A.A.C. R18-2-306.01]

d. Paving

(1) The Permittee shall maintain the quarry road between Twin Peaks Road and the quarry entrance in a paved condition.

(2) *The Permittee shall maintain the plant road segments paved in 1991, 1992, 1995, and 1996 in a paved condition. The Permittee shall maintain records identifying these paved road segments*. These records shall be available to ADEQ on request. [A.A.C. R18-2-306.01, A.A.C. R 18-2-331.A.3.a]
[Material permit conditions are indicated by underline and italics]

e. Dust Control Requirements for Unpaved Roads

(1) *The Permittee shall operate at all times in conformance with the Dust Control Plan approved by the Director.*
[A.A.C. R18-2-306.01, A.A.C. R 18-2-331.A.3.a]
[Material permit conditions are indicated by underline and italics]

(2) At least 180 days before the date on which Kiln 6 becomes operational, the Permittee shall submit a Kiln 6 Dust Control Plan. The plan shall be submitted using the appropriate permit revision mechanism in Title 18, Chapter 2, Article 3 of the Arizona Administrative Code. The plan shall contain, at a minimum, all of the following information:
[A.A.C. R18-2-306.A.3.c]

(a) Names, address(es), and phone numbers of person(s) responsible for the preparation, maintenance, and implementation of each element of the Dust Control Plan.

(b) Control measures or a combination thereof to be applied to all fugitive dust sources, before, after, and while conducting any dust generating operation, including during weekends, after work hours, and on holidays. The control measures specified in the Dust Control Plan shall address and shall be sufficient to ensure compliance with Condition I.B of Attachment "D".

(c) A drawing that shows:

(i) Entire project site boundaries;

(ii) Acres to be disturbed with linear dimensions;

(iii) Nearest public roads;

(iv) North arrow; and

(v) Planned exit locations onto paved public roadways.

(d) Initial test results demonstrating compliance with Condition I.B of Attachment "D".

(e) Adequate recordkeeping measures to monitor the dust suppressant or water application rates.

f. Open Burning

(1) Except as provided in Condition II.B.1.f(2) below, and except when permitted to do so by either the Director or the local officer delegated the authority for issuance of open burning permits, the Permittee shall not ignite, cause to be ignited, permit to be ignited, or suffer, allow or maintain any open outdoor fire. [A.A.C. R18-2-602.A]

(a) "Open outdoor fire" means any combustion of combustible material of any type outdoors, in the open where the products of combustion are not directed through a flue. Cutting torches. welding, open flames used in the maintenance and repair of stationary or mobile equipment, coal fires, explosives, fuses and blasting agents used in the quarry and torches used to ignite the Kiln 1-4 or Kiln 6 main burners are not open outdoor fires. [A.A.C. R18-2-602.B]

(b) "Flue," as used in (a) above, means any duct or passage for air, gases or the like, such as a stack or chimney. [A.A.C. R18-2-602.B]

(2) The following fires are exempted from the prohibition in Condition II.B.1.f(1) of this Attachment: [A.A.C. R18-2-602.C]

(a) Fires used only for:

(i) Cooking of food,

(ii) Providing warmth for human beings,

(iii) Recreational purposes,

(iv) Branding of animals,

(v) Orchard heaters for the purpose of frost protection in farming or nursery operations, or

(vi) The proper disposal of flags under 4 U.S.C. 1, § 8. [A.A.C. R18-2-602.C.1]

(b) Any fire set or permitted by any public officer in the performance of official duty, if the fire is set or permission given for the following purpose: [A.A.C. R18-2-602.C.2]

(i) Control of an active wildfire; or

(ii) Instruction in the method of fighting fires.

(c) Fire set by or permitted by the Director of Department of Agriculture for the purpose of disease and pest prevention in an organized, area-wide control of an epidemic or infestation affecting livestock or crops. [A.A.C. R18-2-602.C.3]

(d) Prescribed burns set by or assisted by the federal government or any of its departments, agencies, or agents, or the state or any of its agencies, departments, or political subdivisions, regulated under Article 15 of A.A.C. R18-2. [A.A.C. R18-2-602.C.4]

2. General Limitation on Visible Emissions

The Permittee shall not cause or permit the airborne diffusion of visible emissions, including fugitive dust, beyond the property boundary line within which the emissions became airborne. [Pima County Applicable SIP Rule 343]

a. In actual practice, the airborne diffusion of visible emissions across property lines shall be prevented by appropriately controlling the emissions at the point of discharge, or ceasing entirely the activity or operation which is causing or contributing to the emissions.

b. Condition II.B.2.a shall not apply when the naturally induced wind speed exceeds 25 miles per hour as estimated by a certified visible emission evaluator using the Beaufort Scale of Wind-Speed Equivalents, or as recorded by a U.S. Weather Bureau Section or a U.S. Government military installation.

c. The exception in Condition II.B.2.b shall not apply to the demolition, destruction, transport, or pulverization of structures containing friable asbestos materials, and all dust producing activities associated with such sources shall be halted when the wind is causing or contributing visible emissions to cross beyond the property lines within which the emissions discharge.

d. Any disregard of, neglect of, or inattention to other controls required herein, during any time when Condition II.B.2.b is in effect, shall automatically waive the exception in Condition II.B.2.b, and such relaxation of controls shall be a violation.

C. Monitoring, Recordkeeping, and Reporting Requirements

1. Property Boundary Visible Emissions Monitoring

a. Property Boundary Line with the Rillito Community

[A.A.C. R18-2-306.A.3.c and R18-2-331.A.3.c]

[Material permit conditions are indicated by underline and italics]

(1) *The Permittee shall install*, and operate, during daylight hours, *cameras for monitoring and recording visible emissions across the property boundary line with the Rillito Community, in accordance with the following*:

(a) *The Permittee shall use Panasonic WV-NP1004 cameras, or cameras of equivalent or better resolution*, set to the highest possible image resolution. The Permittee shall implement a system to keep the lenses clean to the extent practicable.

(b) *Install two cameras located along the north boundary of the facility, looking east. The first camera shall be located at the southwestern end of the Waste Water Treatment Plant (WWTP), looking along the fence line of the WWTP. The second camera shall be located east of the WWTP. The cameras shall be mounted high enough to see over any obstacles, including obstacles along the contractor's road.*

(c) Each camera shall record an image every six minutes.

(2) The Permittee shall comply with the following:

(a) Review the data on a daily basis each business day and on holidays or weekends when coal unloading occurs.

(b) If review of the data shows visible emissions related to the Permittee's operations or activities crossing the property boundary line, the Permittee shall report to the Director following the excess emission reporting procedures in Section XII of Attachment "A" of this permit.

(c) Take appropriate corrective action if review of the data shows visible emissions related to the Permittee's operations or activities crossing the property boundary line.

(d) Submit the camera data to the Director on a monthly basis. The Permittee shall submit the stored images on a compact disc(s) or other electronic submittal system as approved by the Director.

(e) The cameras shall be programmed to record, on the images, the date and time the images were recorded.

(3) During periods of camera downtime or maintenance, the Permittee shall conduct a daily visible emissions survey of the property boundary line with the Rillito Community, in accordance with EPA Reference Method 22. The daily survey shall be conducted during any coal unloading activity that occurs in daylight hours. If no coal unloading activity is to occur during daylight hours the survey may be conducted at any time during daylight hours. If any visible emissions are observed to cross the property boundary line with the Rillito Community, the Permittee shall follow the excess emission reporting procedures in Section XII of Attachment "A."

b. Other Property Boundary Lines

For all property boundary lines other than the property boundary line with the Rillito Community, the Permittee shall conduct a daily visible emissions survey

during daylight hours in accordance with EPA Reference Method 22. If visible emissions related to the Permittee's operations are observed to cross a property boundary line, the Permittee shall report the emissions using the excess emission reporting procedures in Section XII of Attachment "A" of this permit.
[A.A.C. R18-2-306.A.3.c]

c. For each daily visible emissions survey required by Conditions II.C.1.a(3) and II.C.1.b above, the Permittee shall maintain the following records:
[A.A.C. R18-2-306.A.3.c]

(1) Location, date, time of observation;

(2) Name of the observer;

(3) Results of the observation;

(4) If corrective action was necessary, a description of the corrective action

2. Visible Emissions Observation Plan [A.A.C. R18-2-306.A.3.c]

a. The Permittee shall conduct Visible Emissions Observation Procedures at least once each calendar month as per the Visible Emissions Observation Plan approved by the Department, and in accordance with Conditions II.C.2.c through II.C.2.g below.

b. At least 90 days before the initial firing of fuel in Kiln 6, the Permittee shall submit a Visible Emissions Observation Plan to be approved by the Director. The plan shall identify a central lookout station or multiple observation points, as appropriate, from where non-point sources and, where applicable, fugitive emissions shall be monitored. When multiple observation points are used, all non-point sources and, where applicable, fugitive emissions associated with each observation point shall be specifically identified within the observation plan.

c. A certified EPA Reference Method 9 observer shall conduct a visual survey of visible emissions from non-point sources and, where applicable, fugitive emissions in accordance with the Visible Emissions Observation Plan, under representative operating conditions.

d. The Permittee shall keep a record of the name of the observer, the date and time on which the observation was made, the location(s) of the observation, and the results of the observation.

e. If the observer sees a plume from a non-point sources and, where applicable, fugitive emissions source that on an instantaneous basis appears to exceed the applicable opacity standard, then the observer shall, if practicable, take a six-minute EPA Reference Method 9 observation of the plume.

f. If the six-minute opacity of the plume is less than the applicable opacity standard, the observer shall make a record of the following:

(1) Location, date, and time of the observation;

(2) The results of the EPA Reference Method 9 observation; and

(3) The name of the observer.

g. If the six-minute opacity of the plume exceeds the applicable opacity standard,

then Permittee shall do the following:

(1) Adjust or repair the controls or equipment to reduce opacity to below the applicable opacity standard;

(2) Record corrective actions;

(3) Report as an excess emission in accordance with Section XII of Attachment "A" of this permit; and

(4) Conduct a six-minute EPA Reference Method 9 observation reading within 48 hours after taking corrective action. The results of this observation including date, time, name of the observer, and location shall be recorded.

h. Any changes to the Visible Emissions Observation Plan approved by the Director shall be made only with the prior approval of the Director.

3. The Permittee shall maintain records of maintenance activities conducted on the paved roads identified in Condition II.B.1.d of this Attachment. [A.A.C. R18-2-306.A.3.c]

4. Recordkeeping for Fugitive Dust Work Practice Requirements [A.A.C. R18-2-306.A.3.c]

a. The Permittee shall maintain records of the dates on which any of the following activities were performed and all control measures which were employed:

(1) Constructing, altering, or demolishing a building or its appurtenances;

(2) Constructing or reconstructing a roadway, driveway, or parking area. Construction and reconstruction activities at the quarry and the aggregate plant are not subject to this condition.

b. The Permittee shall document deviations from the control measures used for the following activities by recording the date, time, and reason for the deviation:

(1) When moving or excavating earth,

(2) When using parking lots or driveways, and

(3) When engaging in the activities described in Conditions II.B.1.c(1) through II.B.1.c(8) of this Attachment.

5. The Permittee shall maintain records of each instance of operation not consistent with the current Dust Control Plan. Each such instance shall be considered a permit deviation and shall be reported in accordance with Section XII of Attachment "A". [A.A.C. R18-2-306.A.4]

C, **Permit Shield**

Compliance with this Section shall be deemed compliance with A.A.C. R18-2-614, A.A.C.R18-2-702.B, A.A.C. R18-2-604.A, A.A.C. R18-2-604.B, A.A.C.R18-2-605.A, A.A.C.R18-2-605.B, A.A.C. R18-2-606,A.A.C. R18-2-607.A., A.A.C. R18-2-607.B, A.A.C. R18-2-602.A, A.A.C. R18-2-602.B, and A.A.C. R18-2-602.C. [A.A.C.R18-2-325]

III. ROCK CRUSHING AND SCREENING ACTIVITIES

This Section is applicable to Twin Peak Rock Crushing & Screening plant, and portable grizzly screen,

when used for screening gypsum/limestone, referenced in Attachments "E" and "F".

A. General Requirements

1. *The Permittee shall not process more than 800,000 tons of rock in any rolling 12-month period*. [A.A.C. R18-2-306.01.A and -331.A]
[Material permit conditions are indicated by underline and italics]

2. *The Permittee shall install*, calibrate, maintain, and operate *monitoring devices which can be used to determine daily the process weight of sand, gravel or crushed stone produced*. *The weighing devices shall have an accuracy of plus or minus 5 percent over their operating range*. This condition is not material in the event failure to comply is due to a sudden and unavoidable breakdown of the process or the control equipment, resulted from unavoidable conditions during a startup or shutdown, or resulted from upset of operations.
[A.A.C. R18-2-306.A.3.d , -331.A.3.c and -331.B]
[Material permit conditions are indicated by underline and italics]

3. The Permittee shall demonstrate compliance with the above condition by conducting, and maintaining record of, annual calibration checks. [A.A.C. R18-2-306.A.3.c]

4. The Permittee shall keep records of the rolling 12-month total weight of rock processed. These records shall be made available to ADEQ upon request. [A.A.C. R18-2-306.A.3.c]

B. Equipment subject to New Source Performance Standards (NSPS)

1. Applicability

A NSPS affected facility is defined as each crusher, grinding mill, screening operation, bucket elevator, belt conveyor, bagging operation, storage bin, enclosed truck or railcar loading station which was constructed after August 31, 1983, and which has a primary crusher capacity of more than 150 tons per hour. This Part is applicable to Twin Peak Rock Crushing & Screening plant facilities constructed after August 31, 1983, and portable grizzly screen, when used for screening gypsum/limestone. [40 CFR 60.670]

2. Particulate Matter and Opacity

a. Emission limitations and Standards

(1) *The Permittee shall not cause to be discharged into the atmosphere from any transfer point on belt conveyors or from any other affected facility any fugitive emissions which exhibit greater than 10 percent opacity*.
[40 CFR 60.672.b and A.A.C. R18-2-331.A.3.f]
[Material permit conditions are indicated by underline and italics]

(2) *The Permittee shall not cause to be discharged into the atmosphere from any crusher fugitive emissions which exhibit greater than 15 percent opacity.* [40 CFR 60.672.c and A.A.C. R18-2-331.A.3.f]
[Material permit conditions are indicated by underline and italics]

(3) Truck dumping of nonmetallic minerals into any screening operation, feed hopper, or crusher is exempt from the requirements of this Part.
[40 CFR 60.672.d]

b. Air Pollution Control Requirements

Water spray bars or equivalent control equipment shall be used on all crushers and screens whenever the equipment is operating or material must be adequately wet to minimize visible emissions to the extent practical. This condition is not material in the event failure to comply is due to a sudden and unavoidable breakdown of the process or the control equipment, resulted from unavoidable conditions during a startup or shutdown, or resulted from upset of operations. [A.A.C. R-18-2-306.01, A.A.C. R18-2-331.A.3.d and e and A.A.C. R18-2-331.B]

[Material permit conditions are indicated by underline and italics]

c. Monitoring, Reporting, and Recordkeeping Requirements

A certified EPA Reference Method 9 observer shall conduct a monthly survey of visible emissions emanating from affected sources. If the opacity of the emissions observed appears to exceed the standard, the observer shall conduct a certified EPA Reference Method 9 observation. The Permittee shall keep records of the initial survey and any EPA Reference Method 9 observations performed. These records shall include the emission point observed, location of observer, name of observer, date and time of observation, and the results of the observation. If the observation results in an exceedance of the applicable opacity limit, the Permittee shall take corrective action and log all such actions. Such exceedance shall be reported as excess emissions in accordance with Condition XII.A.1 of Attachment "A". [A.A.C. R18-2-306.A.3.c]

d. Notification Requirements

The Permittee shall furnish to the Director a written notification of any physical or operational change to an affected facility which may increase the emission rate of any air pollutant to which a standard applies, unless that change is specifically exempted under an applicable subpart or in 40 CFR §60.14(e). This notice shall be postmarked 60 days or as soon as practicable before the change is commenced and shall include information describing the precise nature of the change, present and proposed emission control systems, productive capacity of the facility before and after the change, and the expected completion date of the change. The Director may request additional relevant information subsequent to this notice. [40 CFR 60.7(a)(4)]

3. Permit Shield

Compliance with the conditions of this Part shall be deemed compliance with the 40 CFR 60.670, 40 CFR 60.672(b), 40 CFR 60.672(c), 40 CFR 60.672(d). [A.A.C R18-2-325]

C. Equipment not subject to NSPS

1. Applicability

This Part is applicable to Twin Peak Rock Crushing & Screening plant facilities not subject to NSPS under Section III.B above.

2. Particulate Matter and Opacity

a. Emission Limits/Standards

(1) The Permittee shall not cause, allow or permit the discharge of particulate matter into the atmosphere, except as fugitive emissions, in any one hour from any gravel or crushed stone processing plant in total quantities in excess of the amounts calculated by one of the following equations: [Arizona SIP R9-3-522.A.2]

(a) For process sources having a process weight rate of 60,000 pounds per hour (30 tons per hour) or less, the maximum allowable particulate emissions shall be determined by the following equation:

$E = 3.59\ P^{0.62}$

Where:

E = the maximum allowable emissions rate in pounds-mass per hour.

P = the process weight rate in tons-mass per hour.

(b) For process sources having a process weight rate greater than 60,000 pounds per hour (30 tons per hour), the maximum allowable emissions shall be determined by the following equation:

$E = 17.31\ P^{0.16}$

Where "E" and "P" are defined as in Condition III.C.2.a(1)(a) above.

(2) Opacity

The Permittee shall not cause to be discharged into the atmosphere from any gravel or stone crushing processes any emissions greater than 20 percent opacity. [A.A.C. R18-2-702.B.1]

3. Air Pollution Control Requirements

a. Spray bar pollution control shall be utilized in accordance with "EPA Control of Air Emissions From Process Operations in the Rock Crushing Industry" (EPA 340/1-79-002), and "Wet Suppression System" (pages 15-34, amended as of January, 1979 (and no future amendments or editions)), as incorporated herein by reference and on file with the Office of the Secretary of State, with placement of spray bars and nozzles as required by the Director to minimize air pollution. [A.A.C. R18-2-722.D]

b. The Permittee shall control fugitive emissions from process sources subject to this Part in accordance with the methods listed in Condition II.B.1.c of this Attachment. [A.A.C.R18-2-722.E]

4. Monitoring, Recordkeeping and Reporting Requirements

A certified EPA Reference Method 9 observer shall conduct a monthly survey of visible emissions from the affected sources. If the opacity of the emissions observed appears to

exceed the standard, the observer shall, if possible, conduct a certified EPA Reference Method 9 observation. The Permittee shall keep records of the initial survey and any EPA Reference Method 9 observations performed. These records shall include the emission point observed, location of observer, name of observer, date and time of observation, and the results of the observation. If the observation results in an exceedance of the 20 percent opacity limit, the Permittee shall take corrective action and log all such actions. Such exceedance shall be reported as excess emissions in accordance with Condition XII.A.1 of Attachment "A". [A.A.C. R18-2-306.A.3.c]

5. Permit Shield

Compliance with the conditions of this Part shall be deemed compliance A.A.C. R18-2-702.B.1, A.A.C. R18-2-722.C, A.A.C. R18-2-722.D, A.A.C. R18-2-722.E, Arizona SIP R9-3-522.A.2, P.C.C. §§ 17.16.370.B, P.C.C. §§ 17.16.710. [A.A.C. R18-2-325]

IV. FUEL BURNING EQUIPMENT

A. Applicability

This Section applies to all boilers and heaters listed in Attachment "E" and Attachment "F" of this permit.

B. Fuel Limitation

The Permittee shall only burn natural gas in all the heaters and boilers.

[A.A.C. R18-2-306.01.A and -331.A.3.a]
[Material Permit Condition is indicated by underline and italics]

C. Particulate Matter and Opacity

1. Emission Limits/Standards

a. The Permittee shall not cause, allow, or permit the emission of particulate matter, caused by combustion of fuel, from any fuel burning operation subject to this Section, in excess of the amounts calculated by one of the following equations: [A.A.C. R18-2-724.C]

(1) For equipment having a heat input rate of 4,200 million BTU per hour or less, the maximum allowable emissions shall be determined by the following equation:

$$E = 1.02\ Q^{0.769}$$

where

E = the maximum allowable particulate emission in pounds-mass per hour,

Q = the heat input rate in million BTU per hour.

(2) For equipment having a heat input rate greater than 4,200 million BTU per hour, the maximum allowable emissions shall be determined by the following equation:

$$E = 17.0\ Q^{0.432}$$

where

E and Q have the same meaning as in Condition IV.C.1.a(1) above.

b. For purposes of this Part the heat input shall be the aggregate heat content of all fuels whose products of combustion pass through a stack or other outlet. The total heat input of all fuel-burning units on a plant or premises shall be used for determining the maximum allowable amount of particulate matter which may be emitted. [A.A.C. R18-2-724.B]

c. The Permittee shall not cause the emission of any plume from process sources subject to this Section, whose opacity is greater than 15 percent, as determined by EPA Reference Method 9 of 40 CFR Part 60, Appendix A. [A.A.C. R18-2-724.J]

2. Monitoring, Record keeping, and Reporting Requirements

a. The Permittee shall keep records of fuel supplier certifications to demonstrate compliance. The certification shall contain information regarding the name of fuel supplier and lower heating value of the fuel. These records shall be made available to ADEQ upon request. [A.A.C. R18-2-306.A.3.c]

b. The Permittee shall report all 6-minute periods during which the visible emissions exceed 15 percent opacity, as required under Section XII of Attachment "A". [A.A.C. R18-2-724.J]

D. Permit Shield

Compliance with this Section shall be deemed compliance with A.A.C. R18-2-724.B, A.A.C R18-2-724.C, and A.A.C R18-2-724.J. [A.A.C. R18-2-325]

V. GASOLINE STORAGE TANK

A. Operating Limitations

1. Gasoline storage tank shall be equipped with a submerged filling device or acceptable equivalent, for control of hydrocarbon emissions. [A.A.C. R18-2-710.B]

2. All pumps and compressors that handle gasoline shall be equipped with mechanical seals or other equipment of equal efficiency to prevent release of organic contaminants into the atmosphere. [A.A.C. R18-2-710.D]

B. Monitoring and Recordkeeping Requirements

1. The Permittee shall, for the gasoline storage tank, maintain a file, of the typical Reid vapor pressure of gasoline stored and of dates of storage. Records of the dates on which the storage vessel is empty shall be maintained. [A.A.C. R18-2-710.E.1]

2. The Permittee shall record the average monthly temperature and true vapor pressure of gasoline at such temperature if the true vapor pressure is greater than 470 mm Hg (9.1 psia) and the gasoline is stored in a storage vessel other than one equipped with a vapor recovery system or its equivalent. [A.A.C. R18-2-710.E.2.b]

3. The average monthly storage temperature shall be an arithmetic average calculated for each calendar month, or portion thereof, if storage is for less than a month, from bulk liquid storage temperatures determined at least once every seven days. [A.A.C. R18-2-710.E.3]

4. The true vapor pressure shall be determined by the procedures in American Petroleum Institute Bulletin 2517, amended as of February 1980 (and no future editions), which is incorporated herein by reference and on file with the Office of the Secretary of State. This procedure is dependent upon determination of the storage temperature and the Reid vapor pressure, which requires sampling of the petroleum liquids in the storage vessels. Unless the Director requires in specific cases that the stored petroleum liquid be sampled, the true vapor pressure may be determined by using the average monthly storage temperature and the typical Reid vapor pressure. For those liquids for which certified specifications limiting the Reid vapor pressure exist, the Reid vapor pressure may be used. For other liquids, supporting analytical data must be made available upon request to the Director when typical Reid vapor pressure is used. [A.A.C. R18-2-710.E.4]

C. Permit Shield

Compliance with the Section shall be deemed compliance with A.A.C. R18-2-710.B, A.A.C. R18-2-710.D, A.A.C. R18-2-710.E.1, A.A.C. R18-2-710.E.2.b, A.A.C. R18-2-710.E.3 and A.A.C. R18-2-710.E.4. [A.A.C. R18-2-325]

VI. DIESEL/USED OIL TANKS

A. Applicability

The Section is applicable to diesel storage tank, used oil tanks and bunker C oil tank.

B. Volatile Organic Compounds (VOCs)

1. The storage tank shall be equipped with a submerged filling device or acceptable equivalent, for control of hydrocarbon emissions. [A.A.C. R18-2-306.A.2]

2. All pumps and compressors that handle volatile organic compounds shall be equipped with mechanical seals or other equipment of equal efficiency to prevent release of organic contaminants into the atmosphere. [A.A.C. R18-2-306.A.2]

3. Materials including solvents or other volatile compounds, and other chemicals utilized in the processes under this Section shall be processed, stored, used, and transported in such a manner and by means that they will not evaporate, leak, escape or be otherwise discharged into the ambient air so as to cause or contribute to air pollution. Where means are available to reduce effectively the contribution to air pollution from evaporation, leakage or discharge, the installation and use of such control methods, devices, or equipment shall be mandatory. [A.A.C. R18-2-730.F]

4. Where a stack, vent or other outlet is at such a level that fumes, gas mist, odor, smoke, vapor or any combination thereof constituting air pollution is discharged to adjoining property, the Director may require the installation of abatement equipment or the alteration of such stack, vent, or other outlet by the Permittee to a degree that will adequately dilute, reduce or eliminate the discharge of air pollution to adjoining property. [A.A.C. R18-2-730.G]

C. Permit Shield

Compliance with the Section shall be deemed compliance with A.A.C. R18-2-730.F and G.
[A.A.C. R18-2-325]

VII. PORTABLE GRIZZLY SCREEN FOR PROCESSING IRON/CLINKER

A. Applicability

This Section is applicable to the portable grizzly screen, referenced in Attachments "E" and "F", when used for screening iron/clinker

B. Particulate Matter and Opacity

1. Emission Limits/Standards

a. The Permittee shall not cause, suffer, allow or permit the discharge of particulate matter into the atmosphere except as fugitive emissions in any one hour from any process source, in total quantities in excess of the amounts calculated by the equations set forth below:

(1) For process sources having a process weight rate of 60,000 pounds per hour (30 tons per hour) or less, the maximum allowable emissions shall be determined by the following equation:

$E = 4.10\ P^{0.67}$

Where:

E =the maximum allowable particulate emissions rate in pounds-mass per hour.

P = the process weight rate in tons-mass per hour.

(2) For process sources having a process weight rate greater than 60,000 pounds per hour (30 tons per hour), the maximum allowable emissions shall be determined by the following equation:

$E = 55.0\ P^{0.11} - 40,$

Where,

E and P are as defined in Condition VIII.B.1.a(1) above.
[A.A.C. R18-2-730.A.1]

2. The opacity of any plume or effluent from any process source subject to the provisions of this Section shall not be greater than 20%. [A.A.C. R18-2-702.B]

3. If the presence of uncombined water is the only reason for an exceedance of the visible

emissions requirements in Condition VII.B.2 above, the exceedance shall not constitute a violation of the applicable opacity limit. [A.A.C. R18-2-702.C]

C. Monitoring, Record keeping and Reporting Requirements

A certified EPA Reference Method 9 observer shall conduct a monthly survey of visible emissions emanating from the grizzly system, when in operation. If the opacity of the emissions observed appears to exceed the standard, the observer shall conduct a certified EPA Reference Method 9 observation. The Permittee shall keep records of the initial survey and any EPA Reference Method 9 observations performed. These records shall include the emission point observed, location of observer, name of observer, date and time of observation, and the results of the observation. If the observation results in an exceedance of the 20 percent opacity limit, the Permittee shall take corrective action and log all such actions. Such exceedance shall be reported as excess emissions in accordance with Condition XII.A.1 of Attachment "A". [A.A.C. R18-2-306.A.3.c]

D. Permit Shield

Compliance with this Section shall be deemed compliance with the A.A.C. R18-2-702.B, A.A.C. R18-2-702.C, and A.A.C. R18-2-730.A.1. [A.A.C. R18-2-325]

VIII. MOBILE SOURCE REQUIREMENTS

A. Applicability

The requirements of this Section are applicable to mobile sources which either move while emitting air contaminants or are frequently moved during the course of their utilization but are not classified as motor vehicles, agricultural vehicles, or agricultural equipment used in normal farm operations. Mobile sources shall not include portable sources as defined in A.A.C. R18-2-101.90. [A.A.C.R18-2-801.A]

B. Particulate Matter and Opacity

1. Emission Limitations/Standards

a. Off-Road Machinery

The Permittee shall not cause, allow, or permit to be emitted into the atmosphere from any off-road machinery, smoke for any period greater than ten consecutive seconds, the opacity of which exceeds 40%. Visible emissions when starting cold equipment shall be exempt from this requirement for the first ten minutes. Off-road machinery shall include trucks, graders, scrapers, rollers, and other construction and mining machinery not normally driven on a completed public roadway. [A.A.C.R18-2-802.A and -802.B]

b. Roadway and Site Cleaning Machinery

(1) The Permittee shall not cause, allow or permit to be emitted into the atmosphere from any roadway and site cleaning machinery smoke or dust for any period greater than ten consecutive seconds, the opacity of which exceeds 40%. Visible emissions when starting cold equipment shall be exempt from this requirement for the first ten minutes. [A.A.C.R18-2-804.A]

(2) The Permittee shall take reasonable precautions, such as the use of dust suppressants, before the cleaning of a site, roadway, or alley. Earth or

other material shall be removed from paved streets onto which earth or other material has been transported by trucking or earth moving equipment, erosion by water or by other means. [A.A.C. R18-2-804.B]

c. Unless otherwise specified, no mobile source shall emit smoke or dust the opacity of which exceeds 40%. [A.A.C.R18-2-801.B]

2. Recordkeeping Requirements

The Permittee shall keep a record of all emissions related maintenance activities performed on the Permittee's mobile sources stationed at the facility as per manufacturer's specifications. [A.A.C.R18-2-306.A.5.a]

C. Permit Shield

Compliance with this Section shall be deemed compliance with A.A.C. R18-2-801, A.A.C. R18-2-802.A, A.A.C. R18-2-802.B, A.A.C. R18-2-804.A and A.A.C. R18-2-804.B. [A.A.C.R18-2-325]

IX. OTHER PERIODIC ACTIVITY REQUIREMENTS

A. Abrasive Blasting

Particulate Matter and Opacity

1. Emission Limitations/Standards

a. The Permittee shall not cause or allow sandblasting or other abrasive blasting without minimizing dust emissions to the atmosphere through the use of good modern practices. Good modern practices include:

(1) wet blasting;

(2) effective enclosures with necessary dust collecting equipment; or

(3) any other method approved by the Director.

[A.A.C. R18-2-726]

b. Opacity

The Permittee shall not cause, allow or permit visible emissions from sandblasting or other abrasive blasting operations in excess of 20% opacity, as measured by EPA Reference Method 9. [A.A.C. R18-2-702.B]

2. Monitoring and Recordkeeping Requirement

Each time an abrasive blasting project is conducted, the Permittee shall log in ink or in an electronic format, a record of the following:

a. The date the project was conducted;

b. The duration of the project; and

c. Type of control measures employed.

[A.A.C. R18-2-306.A.3.c]

3. Permit Shield

Compliance with this Part shall be deemed compliance with A.A.C. R18-2-726, A.A.C. R18-2-702.B. [A.A.C.R18-2-325]

B. Use of Paints

1. Volatile Organic Compounds

a. Emission Limitations/Standards

While performing spray painting operations, the Permittee shall comply with the following requirements:

(1) The Permittee shall not conduct or cause to be conducted any spray painting operation without minimizing organic solvent emissions. Such operations, other than architectural coating and spot painting, shall be conducted in an enclosed area equipped with controls containing no less than 96 percent of the overspray. [A.A.C.R18-2-727.A]

(2) The Permittee or their designated contractor shall not either:

(a) Employ, apply, evaporate, or dry any architectural coating containing photochemically reactive solvents for industrial or commercial purposes; or

(b) Thin or dilute any architectural coating with a photochemically reactive solvent.

[A.A.C.R18-2-727.B]

(3) For the purposes of Condition IX.B.1.a(2), a photochemically reactive solvent shall be any solvent with an aggregate of more than 20 percent of its total volume composed of the chemical compounds classified in Conditions IX.B.1.a.(3)(a) through IX.B.1.a(3)(c) below, or which exceeds any of the following percentage composition limitations, referred to the total volume of solvent: [A.A.C.R18-2-727.C]

(a) A combination of the following types of compounds having an olefinic or cyclo-olefinic type of unsaturation-hydrocarbons, alcohols, aldehydes, esters, ethers, or ketones: 5 percent.

(b) A combination of aromatic compounds with eight or more carbon atoms to the molecule except ethylbenzene: 8 percent.

(c) A combination of ethylbenzene, ketones having branched hydrocarbon structures, trichloroethylene or toluene: 20 percent.

(4) Whenever any organic solvent or any constituent of an organic solvent may be classified from its chemical structure into more than one of the groups of organic compounds described in Conditions IX.B.1.a(3)(a) through IX.B.1.a(3)(c) above, it shall be considered to be a member of the group having the least allowable percent of the total volume of solvents. [A.A.C.R18-2-727.D]

b. Monitoring and Recordkeeping Requirements

(1) Each time a spray painting project is conducted, the Permittee shall log in

ink, or in an electronic format, a record of the following:

(a) The date the project was conducted;

(b) The duration of the project;

(c) Type of control measures employed;

(d) Material Safety Data Sheets for all paints and solvents used in the project; and

(e) The amount of paint consumed during the project.

(2) Architectural coating and spot painting projects shall be exempt from the recordkeeping requirements of Condition IX.B.1.b(1) above.
[A.A.C. R18-2-306.A.3.c]

c. Permit Shield

Compliance with this Part shall be deemed compliance with A.A.C.R18-2-727.
[A.A.C. R18-2-325]

2. Opacity

a. Emission Limitation/Standard

The Permittee shall not cause, allow or permit visible emissions from painting operations in excess of 20% opacity, as measured by EPA Reference Method 9.
[A.A.C. R18-2-702.B]

b. Permit Shield

Compliance with the conditions of this Part shall be deemed compliance with A.A.C.R18-2-702.B. [A.A.C. R18-2-325]

C. Demolition/Renovation - Hazardous Air Pollutants

1. Emission Limitation/Standard

The Permittee shall comply with all of the requirements of 40 CFR Part 61 Subpart M (National Emissions Standards for Hazardous Air Pollutants - Asbestos).
[A.A.C. R18-2-1101.A.8]

2. Monitoring and Recordkeeping Requirement

The Permittee shall keep all required records in a file. The required records shall include the "NESHAP Notification for Renovation and Demolition Activities" form and all supporting documents. [A.A.C. R18-2-306.A.3.c]

3. Permit Shield

Compliance with the conditions of this Part shall be deemed compliance with A.A.C. R18-2-1101.A.8. [A.A.C. R18-2-325]

D. Non-vehicle Air Conditioner Maintenance and/or Services

1. The Permittee shall comply with all applicable requirements including monitoring, recordkeeping, and reporting requirements of 40 CFR Part 82, Subpart F.
[40 CFR 82 subpart F]

2. Permit Shield

Compliance with this Section shall be deemed compliance with 40 CFR 82, Subpart F.
[A.A.C.R18-2-325]

E. Solvent Cleaning / Degreasing / Dipping Operations

1. The Permittee shall process, store, use, and transport materials including solvents or volatile compounds in such a manner and by such means that they will not evaporate, leak, escape, or be otherwise discharged into the atmosphere so as to cause or contribute to air pollution. Where means are available to reduce effectively the contribution to air pollution from evaporation, leakage, or discharge, the installation and usage of such control methods, devices, or equipment shall be mandatory. [A.A.C. R18-2-730.F]

2. Permit Shield

Compliance with this Section shall be deemed compliance with A.A.C. R18-2-730.F.
[A.A.C.R18-2-325]

X. AMBIENT MONITORING

A. This Section is not based on a federal applicable requirement and is therefore state-enforceable only. [Permit No. 1000547 Section X, 40 CFR 58, A.A.C. R18-2-306.B.2]

B. PM_{10} Monitoring

The Permittee shall maintain and operate ambient PM_{10} samplers at the site previously approved by the Director. The network shall comply with the following requirements:

1. General Requirements

a. Samplers: The Permittee shall use EPA approved PM_{10} samplers.

b. Particle size to be measured: 10 microns

2. Location of PM_{10} Sites and Sampling Frequency

The Permittee shall continue to conduct the ambient PM_{10} particulate sampling at the existing Rillito Northwest (NW) monitoring site (8840 W. Robinson St. Rillito, AZ 85653). This PM_{10} State and Local Air Monitoring Station (SLAMS) - equivalent network shall comply with the following requirements: [AAC R18-2-306.A.2 and 40 CFR 58]

a. Samples shall be collected on every-sixth-day schedule as per the national EPA Monitoring Schedule posted on the EPA Ambient Monitoring Technology Information Center (AMTIC) website.

b. In the event that a sampler malfunction or other circumstances beyond the Permittee's control prevents the successful collection of the required samples on the schedule specified above, make up samples may be collected, if necessary, after the correction of the malfunction problem to comply with the data recovery specifications listed in CFR documents. The make up sample may be taken before the next regularly scheduled sampling day. Alternately, the make up sample may comprise of the concentration measured by the collocated sampler used for making precision measurements.

c. Sampling, as may be required by ADEQ, during a facility upset or failure of air pollution control equipment shall supersede the every-sixth-day schedule specified above.

3. Laboratory Sample Analyses

Each sample shall be weighed, the 24-hour sample period concentration calculated and reported in standard $\mu g/m^3$. The laboratory mass measurements and subsequent data reporting to ADEQ shall be done in accordance with applicable sections and appendices of 40 CFR Parts 50 and 58 and Quality Assurance Handbook for Air Pollution Measurement Systems, Volume II, U.S. Environmental Protection Agency.

4. Quality Assurance

a. All samplers shall be operated, calibrated, and maintained in accordance with the procedures set forth in the respective manufacturer's instruction manuals and in accordance with applicable sections and appendices of 40 CFR Parts 50 and 58, and the Quality Assurance Handbook for Air Pollution Measurement Systems, Volume II, U.S. Environmental Protection Agency. The samplers shall be sited, maintained, and operated in accordance with the applicable requirements of Appendix K of 40 CFR Part 50, Appendices A, D and E of 40 CFR Part 58. Permittee shall operate a second, collocated PM_{10} sampler of the same brand and model at the Rillito NW site to provide precision data for Permittee's sampling network.

b. The Permittee shall conduct performance audits of the monitoring equipment in accordance with the requirements pertaining to sampler accuracy as specified in Appendix A of 40 CFR Part 58. The performance audits shall be conducted by a qualified independent auditor at least once every 6 months.

c. The Permittee shall conduct technical systems audits of its ambient air monitoring program consistent with the applicable sections of the Quality Assurance Handbook for Air Pollution Measurement Systems, Volume II, U.S. Environmental Protection Agency. The technical systems audits shall be conducted by a qualified independent auditor at least once in every three (3) years.

d. The Permittee shall also participate in technical systems audits and/or performance audits periodically conducted by the Department.

5. Data Reduction

a. The Permittee shall calculate the quarterly and annual summary statistics for PM_{10} data in accordance with procedures in 40 CFR Part 50 Appendix K.

b. The Permittee shall calculate the precision and accuracy statistics in accordance with procedures in 40 CFR Part 58 Appendix A.

c. Valid data recovery shall meet the EPA minimum data completeness requirement of 75 percent or the percentage specified in the applicable sections of 40 CFR Part 50 Appendix K.

(1) Valid data shall refer to all observations collected for the specific monitoring purpose;

(2) For filter based (non-continuous) measurements, data completeness shall be based on quarterly data recovery.

6. Reports and Data Submittal

a. The Permittee shall submit to the Director, quarterly and annual reports pertaining to the PM_{10} measurements and the quality control and assurance (QA/QC) data collected pursuant to this section. The quarterly and annual reporting schedule should follow the current EPA reporting schedule as described in 40 CFR 58.16 (b). Summary data and reporting frequencies shall be consistent with EPA reporting requirements.

b. If the monitored daily average of PM_{10} is greater than 150 microgram per cubic meter, the Permittee shall notify the Director of the event by a FAX or electronic communication within 24 hours of the time when the Permittee first learned of the occurrence. Within 30 days of the notification, the Permittee shall provide to the Director any meteorological data collected by the Permittee for that day along with the Permittee's evaluation as to whether any event or upset at the facility or any natural occurrence could have caused such an exceedance.

c. The quarterly and annual reports shall contain the following information. All concentration data shall be presented in micrograms per cubic meter.

(1) Site name;

(2) Sample date;

(3) Number of possible observations, number of actual valid observations, and percent data recovery;

(4) Each 24-hr sample value;

(5) Codes for missing and invalid samples indicating the reason why the sample is missing or invalid;

(6) Average PM Concentration for the quarter calculated from valid 24-hour block daily averages as described in 40 CFR 50;

(7) Highest and 2nd highest daily averages;

(8) Number of exceedances; and

(9) Any quality control documentation.

d. In addition, to confirm data validation by the Permittee, all data reports should include copies of all appropriate supporting documentation (field data sheets, flow checks, calibrations etc.), including, but not limited to, the following:

(1) Copies of laboratory reports;

(2) Copies of all applicable quality control and field reports (e.g., field service checks, flow checks, calibrations, audit reports); and

(3) Documentation of problems and corrective actions, and explanations for discrepancies.

e. All quarterly and annual reports shall be submitted as follows, both electronically by CD or diskette and in paper copy form to the Air Quality Compliance Section of ADEQ:

(1) The preferred electronic format for the PM_{10} sample data is the Department's Air Assessment Ambient Database (AAAD) format. This format is a comma delimited text file.

(2) The electronic format for the summary data may be in a word processor table or a spreadsheet.

(3) AAAD parameter names and flags shall be used and, the information on flags/ qualifiers and naming shall be provided.

f. All PM data shall be reported in both standard and actual conditions.

g. Notwithstanding the reporting and data submittal requirements of this section, units shall be consistent with the EPA standards and reporting requirements.

h. All data submitted to the Director shall be reviewed, quality assured, and certified by the Permittee.

i. Data from the samplers and sensors shall be retained by the Permittee for at least five years after the date of generation.

C. Meteorological Monitoring and Recordkeeping and Reporting Requirements

1. The Permittee shall continue to maintain and operate meteorological sensors at the existing Rillito Southeast (SE) monitoring site to record wind speed, vector wind direction, and standard deviation of wind direction. These monitors shall be installed, maintained, and operated in accordance with applicable sections and appendices of the Quality Assurance Handbook for Air Pollution Measurement Systems, Volume IV, Meteorological Measurements and On-Site Meteorological Program Guidance for Regulatory Modeling Applications.

2. The meteorological data measurements shall be made continuously. In the event of system malfunction, the unit shall be repaired or replaced as expeditiously as practicable to restore normal monitoring. If the repair of the unit is not feasible within 3 business days of the discovery of the malfunction, the Permittee shall notify the Department of any such malfunction and expected duration. The Permittee shall maintain records of the corrective action taken.

3. The Permittee shall conduct annual audits of the meteorological monitoring station consistent with applicable sections and appendices of Quality Assurance Handbook for Air Pollution Measurement Systems, Volume IV, Meteorological Measurements, utilizing a qualified independent auditor under contract to the Permittee.

4. The Permittee shall provide electronic files of the meteorological data in the Department's Data Collection System (DCS) format within 30 days of the end of each calendar quarter. This format is a comma delimited text file.

   The raw data shall contain the following:

   a. Date and hour of each measurement at each site; and

   b. Hourly average meteorological parameters specified above, in the appropriate measurement units.

5. Records of all the meteorological data and annual audit reports shall be retained by the Permittee for at least five years after the date of generation.

ATTACHMENT "C": SPECIFIC PROVISIONS – EXISTING FACILITY (KILNS 1-4)
AIR QUALITY CONTROL PERMIT NO. 47259
FOR
CALPORTLAND COMPANY - RILLITO CEMENT PLANT

I. DUST CONTROL REQUIREMENTS

A. *The Permittee shall operate at all times in conformance with the Dust Control Plan currently approved by the Director*. [A.A.C. R18-2-306.01, A.A.C. R18-2-331.A.3.a]
[Material Permit Condition is indicated by underline and italics]

B. *The Permittee shall maintain 65% dust control on the following road sections;*
[A.A.C. R18-2-306.01, A.A.C. R18-2-331.A.3.a]
[Material Permit Condition is indicated by underline and italics]

1. All active roads at the quarry;
2. The unpaved sections of the road from Avra Valley road to Twin Peaks Road;
3. The unpaved sections of the roads from the Canal to Avra Valley Road; and
4. The following active unpaved roads at the cement plant: East Road, West Road, Coal/Coke Storage Area Road, Central Control Road, and Reclaimer Road.

C. The Permittee shall maintain diagrams of the road section referenced in Condition I.B above.
[A.A.C. R18-2-306.A.3.c]

II. GENERAL REQUIREMENTS

A. Operations and Maintenance Plan (OMP)

1. The Permittee shall operate as per the approved operations and maintenance plans for each affected source under Sections III, IV, V and VI of this Attachment.
[A.A.C. R18-2-1101.B.50, 40 CFR § 63.1350(a), A.A.C. R18-2-306.A.3.c]

2. Each operation and maintenance plan (OMP) shall include procedures for the proper operation and maintenance of the affected source and air pollution control devices in order to meet the emission limits and operating limits under these Sections.
[A.A.C. R18-2-1101.B.50, 40 CFR § 63.1350(a)(1)]

3. Each operation and maintenance plan (OMP) shall include corrective actions to be taken when required under Condition VI.B.3.a of this Attachment.
[A.A.C. R18-2-1101.B.50, 40 CFR § 63.1350(a)(2)]

4. Each plan shall include procedures to be used during an inspection of the components of the combustion system of each kiln and in-line kiln/raw mill at least once per year.
[A.A.C. R18-2-1101.B.50, 40 CFR § 63.1350(a)(3)]

5. Each plan shall include procedures to be used for periodically monitoring the affected sources subject to opacity standards. Such procedures shall include the following requirements: [A.A.C. R18-2-1101.B.50, 40 CFR § 63.1350(a)(4)]

   a. The Permittee shall conduct a monthly 1-minute visible emission test of each affected source in accordance with EPA Reference Method 22 of Appendix A to 40 CFR Part 60. The test must be conducted while the affected source is in

operation. [A.A.C. R18-2-1101.B.50, 40 CFR § 63.1350(a)(4)(i)]

b. If no visible emissions are observed in six consecutive monthly tests for any affected source, the Permittee may decrease the frequency of testing from monthly to semi-annually for that affected source. If visible emissions are observed during any semi-annual test, the Permittee shall resume testing of that affected source on a monthly basis and maintain that schedule until no visible emissions are observed in six consecutive monthly tests. [A.A.C. R18-2-1101.B.50, 40 CFR § 63.1350(a)(4)(ii)]

c. If no visible emissions are observed during the semi-annual test for any affected source, the Permittee may decrease the frequency of testing from semi-annually to annually for that affected source. If visible emissions are observed during any annual test, the Permittee shall resume testing of that affected source on a monthly basis and maintain that schedule until no visible emissions are observed in six consecutive monthly tests. [A.A.C. R18-2-1101.B.50, 40 CFR § 63.1350(a)(4)(iii)]

d. If visible emissions are observed during any EPA Reference Method 22 test, the Permittee shall conduct a 6-minute test of opacity in accordance with EPA Reference Method 9 of Appendix A to 40 CFR Part 60. The EPA Reference Method 9 test shall begin within one hour of any observation of visible emissions. [A.A.C. R18-2-1101.B.50, 40 CFR § 63.1350(a)(4)(iv)]

e. The requirement to conduct EPA Reference Method 22 visible emissions monitoring shall not apply to any totally enclosed conveying system transfer point. "Totally enclosed conveying system transfer point" shall mean a conveying system transfer point that is enclosed on all sides, top, and bottom. The enclosures for these transfer points shall be operated and maintained as total enclosures on a continuing basis in accordance with the OMP. [A.A.C. R18-2-1101.B.50, 40 CFR § 63.1350(a)(4)(v)]

f. If any partially enclosed or unenclosed conveying system transfer point is located in a building, the Permittee shall have the option to conduct an EPA Reference Method 22 visible emissions monitoring test according to the requirements of Conditions II.A.5.a through d of this Attachment for each such conveying system transfer point located within the building, or for the building itself, according to Condition II.A.5.g of this Attachment. [A.A.C. R18-2-1101.B.50, 40 CFR § 63.1350(a)(4)(vi)]

g. If visible emissions from a building are monitored, the requirements of Conditions II.A.5.a through d of this Attachment apply to the monitoring of the building, and the Permittee must also test visible emissions from each side, roof and vent of the building for at least 1 minute. The test must be conducted under normal operating conditions. [A.A.C. R18-2-1101.B.50, 40 CFR § 63.1350(a)(4)(vii)]

6. For affected sources subject to 40 CFR Part 63 Subpart LLL requirements, failure to comply with any provision of the operations and maintenance plan approved by the Director shall be a violation of the standard. For affected facilities not subject 40 CFR Part 63 Subpart LLL requirements, failure to comply with the OMP shall not be a violation of the standard, but shall constitute a violation of the permit. [A.A.C. R18-2-1101.B.50, 40 CFR § 63.1350(b), A.A.C. R18-2-306.A.3.c]

7. Operation and maintenance requirements established pursuant to Section 112 of the Act are enforceable independent of emissions limitations.

[AAC R18-2-1101.B.1, 40 CFR §63.6(e)((1))(iii)]

8. Determination of whether acceptable operation and maintenance procedures are being used will be based on information available to the Director which may include, but is not limited to, monitoring results, review of operation and maintenance procedures (including the startup, shutdown, and malfunction plan required in Section II.B of this Attachment, review of operation and maintenance records, and inspection of the source.
[AAC R18-2-1101(B)(1), 40 CFR §63.6(e)(2)]

B. Startup, Shutdown, and Malfunction Plan (SSM Plan) for Affected Sources

This Part is applicable to all affected sources and associated air pollution control equipment subject to the requirements of 40 CFR Part 63 Subpart LLL.

1. The Permittee shall implement a startup, shutdown, and malfunction plan (SSM Plan) that describes, in detail, procedures for operating and maintaining the source during periods of startup, shutdown, and malfunction and a program of corrective action for malfunctioning process and air pollution control equipment used to comply with the relevant standard. The SSM Plan, developed in accordance with 40 CFR §63.6(e)(3), is incorporated by reference into this permit. [40 CFR §63.6(e)(3)(i)]

2. To satisfy the requirement to develop a SSM Plan, the Permittee may use the affected source's standard operating procedures manual, or an Occupational Safety and Health Administration or other plan, provided the alternative plans meet all the requirements of 40 CFR §63.6(e)(3) and are made available for inspection when requested by the Director.
[40 CFR §63.6(e)(3)(vi)]

3. Based on the results of a determination made under Condition II.A.8 of this Attachment, the Director may require the Permittee to make changes to the SSM Plan. The Director may require reasonable revisions to a SSM Plan, if the Director finds that the plan:
[40 CFR §63.6(e)(3)(vii)]

   a. Does not address a startup, shutdown, or malfunction event that has occurred;

   b. Fails to provide for the operation of the source (including associated air pollution control equipment) during a startup, shutdown, or malfunction event in a manner consistent with good air pollution control practices for minimizing emissions at least to the levels required by all relevant standards; or

   c. Does not provide adequate procedures for correcting malfunctioning process and/or air pollution control equipment as quickly as practicable.

4. If the SSM Plan fails to address an event that meets the characteristics of a malfunction but was not included in the SSM Plan at the time the Permittee developed the SSM Plan, the Permittee shall revise the SSM Plan within 45 days after the event to include detailed procedures for operating and maintaining the source during similar malfunction events and a program of corrective actions for similar malfunctions of process or air pollution control equipment. [40 CFR §63.6(e)(3)(viii)]

5. The Permittee shall keep the written SSM Plan on record after it is developed to be made available for inspection, upon request, by the Director for the life of the affected source or until the affected source is no longer subject to the provisions of 40 CFR Part 63. In addition, if the SSM Plan is revised, the Permittee shall keep previous (i.e., superseded) versions of the SSM Plan on record, to be made available for inspection, upon request, by the Director, for a period of 5 years after each revision to the plan.

6. During periods of startup, shutdown, and malfunction, the Permittee shall operate and maintain all affected sources and associated air pollution control equipment in accordance with the procedures specified in the SSM Plan. [40 CFR §63.6(e)(3)(i)]

7. When actions taken by the Permittee during a startup, shutdown, or malfunction (including actions taken to correct a malfunction) are consistent with the procedures in the affected source's SSM Plan, the Permittee shall keep records for that event that demonstrate that the procedures specified in the plan were followed. These records may take the form of a "checklist", or other effective form of recordkeeping, that confirms conformance with the SSM Plan for the event. In addition, the Permittee shall keep records of these events as specified in Condition II.B.9 below, including records of the occurrence and duration of each startup, shutdown, or malfunction of operation and each malfunction of the air pollution control equipment. Furthermore, the Permittee shall confirm that actions taken during the relevant reporting period during periods of startup, shutdown, and malfunction were consistent with the affected source's startup, shutdown and malfunction plan in the semiannual startup, shutdown, and malfunction report. This report shall be delivered or postmarked by the 30th day following the end of each calendar half. Reports shall only be required if a startup, shutdown, or malfunction occurred during the reporting period. The startup, shutdown, and malfunction report may be submitted simultaneously with the excess emissions and continuous monitoring system performance reports.
[40 CFR §63.6(e)(3)(iii), 40 CFR 63.10(d)(5)(i), and 40 CFR 63.1354(b)(4)]

8. If an action taken by the Permittee during a startup, shutdown, or malfunction (including an action taken to correct a malfunction) is not consistent with the procedures specified in the affected source's SSM Plan, the Permittee shall record the actions for that event, and shall make an immediate report of the actions taken for that event within 2 working days, by telephone call or facsimile (fax) transmission. The immediate report shall be followed by a letter, delivered or postmarked within 7 working days after the end of the event, certified by the Permittee, explaining the circumstances of the event, the reasons for not following the startup, shutdown, and malfunction plan, and whether any excess emissions and/or parameter monitoring exceedances are believed to have occurred.
[40 CFR §63.6(e)(3)(iv), 40 CFR 63.10(d)(5)(ii), and 40 CFR 63.1354(b)(5)]

9. The Permittee shall maintain records of the following:
[40 CFR 63.10(d)(5)(i)]

   a. The occurrence and duration of each startup, shutdown, or malfunction of operation (i.e., process equipment);

   b. The occurrence and duration of each malfunction of the air pollution control equipment;

   c. All maintenance performed on the air pollution control equipment;

   d. Actions taken during periods of startup, shutdown, and malfunction (including corrective actions to restore malfunctioning process and air pollution equipment to its normal or usual manner of operation) when such actions are different from the procedures specified in the SSM Plan;

   e. All information necessary to demonstrate conformance with the SSM Plan when all actions taken during periods of startup, shutdown, and malfunction (including corrective actions to restore malfunctioning process and air pollution control equipment to its normal or usual manner of operation) are consistent with the

procedures specified in the SSM Plan. (The information needed to demonstrate conformance with the SSM Plan may be recorded using a "checklist", or some other effective form of recordkeeping, in order to minimize the recordkeeping burden for conforming events).

C. Recordkeeping, Reporting, and Notification Requirements for HAP Emission Standards

1. The Permittee shall maintain the following records: [A.A.C. R18-2-1101.B.50, 40 CFR § 63.1355(b)]

   a. All records as required by 40 CFR § 63.10(b)(2) and (b)(3). [A.A.C. R18-2-1101.B.50, 40 CFR § 63.1355(b)]

   b. All documentation supporting initial notifications and notifications of compliance status under 40 CFR § 63.9. [A.A.C. R18-2-1101.B.50, 40 CFR § 63.1355(b)(1)]

   c. All records of applicability determination, including supporting analyses. [A.A.C. R18-2-1101.B.50, 40 CFR § 63.1355(b)(2)]

   d. If the Permittee has been granted a waiver under 40 CFR § 63.8(f)(6), any information demonstrating whether the source is meeting the requirements for a waiver of recordkeeping or reporting requirements. [A.A.C. R18-2-1101.B.50, 40 CFR § 63.1355(b)(3)]

   e. The Permittee shall maintain all records required by 40 CFR §63.10(c) for the continuous monitoring systems.

2. The Permittee shall comply with the reporting requirements specified in 40 CFR § 63.10 as follows: [A.A.C. R18-2-1101.B.50, 40 CFR § 63.1354(b)]

   a. As required by 40 CFR § 63.10(d)(2), the Permittee shall report the results of performance tests as part of the notification of compliance status. [A.A.C. R18-2-1101.B.50, 40 CFR § 63.1354(b)(1)]

   b. As required by 40 CFR § 63.10(d)(3), the Permittee shall report the opacity results from tests required under Sections IV, V and VI of this Attachment. [A.A.C. R18-2-1101.B.50, 40 CFR § 63.1354(b)(2)]

   c. As required by 40 CFR § 63.10(e)(2), the Permittee shall submit a written report of the results of the performance evaluation for the continuous monitoring system required by 40 CFR § 63.8(e). The Permittee shall submit the report simultaneously with the results of the performance test. [A.A.C. R18-2-1101.B.50, 40 CFR § 63.1354(b)(6)]

   e. As required by 40 CFR § 63.10(e)(2), when a COMS is used to determine opacity compliance during any performance test required under 40 CFR § 63.7 and described in 40 CFR § 63.6(d)(6), the Permittee shall report the results of the COMS performance evaluation conducted under 40 CFR § 63.8(e). [A.A.C. R18-2-1101.B.50, 40 CFR § 63.1354(b)(7)]

   f. As required by 40 CFR § 63.10(e)(3), the Permittee shall submit an excess emissions and continuous monitoring system performance report for any event when the data provided by the continuous monitoring system indicate the source is

not in compliance with the applicable emission limitation or operating parameter limit. [A.A.C. R18-2-1101.B.50, 40 CFR § 63.1354(b)(8)]

g. The Permittee shall submit a summary report semiannually, along with the compliance certification, which contains the information specified in 40 CFR § 63.10(e)(3)(vi). In addition, the summary report shall include the following information: [A.A.C. R18-2-1101.B.50, 40 CFR § 63.1354(b)(9)]

(1) All exceedances of maximum baghouse inlet gas temperature limits specified in Conditions V.C.1 and V.C.2 of this Attachment; [A.A.C. R18-2-1101.B.50, 40 CFR § 63.1354(b)(9)(i)]

(2) All failures to calibrate thermocouples and other temperature sensors as required under Condition V.E.3.f of this Attachment; [A.A.C. R18-2-1101.B.50, 40 CFR § 63.1354(b)(9)(ii)]

(3) The results of any combustion system component inspections conducted within the reporting period as required under Condition V.E.3.g of this Attachment; and [A.A.C. R18-2-1101.B.50, 40 CFR § 63.1354(b)(9)(iv)]

(4) All failures to comply with any provision of the operation and maintenance plan required by Section II.A of this Attachment. [A.A.C. R18-2-1101.B.50, 40 CFR § 63.1354(b)(9)(v)]

h. If the total continuous monitoring system downtime for any continuous monitoring system for the reporting period is 10 percent or greater of the total operating time for the reporting period, the Permittee shall submit an excess emissions and continuous monitoring system performance report along with the summary report. [A.A.C. R18-2-1101.B.50, 40 CFR § 63.1354(b)(10)]

3. The Permittee shall comply with the notification requirements in 40 CFR § 63.9 as follows: [A.A.C. R18-2-1101.B.50, 40 CFR § 63.1353(b)]

a. Notification of performance tests, as required by 40 CFR §§ 63.7 and 63.9(e). [A.A.C. R18-2-1101.B.50, 40 CFR § 63.1353(b)(2)]

b. Notification of opacity and visible emission observations, required under Sections IV, V and VI, in accordance with 40 CFR §§ 63.6(h)(5) and 63.9(f). [A.A.C. R18-2-1101.B.50, 40 CFR § 63.1353(b)(3)]

c. Notification, as required by 40 CFR § 63.9(g), of the date that the CEMS or COMS performance evaluation required by 40 CFR § 63.8(e) is scheduled to begin. [A.A.C. R18-2-1101.B.50, 40 CFR § 63.1353(b)(4)]

d. Notification of compliance status, as required by 40 CFR § 63.9(h). [A.A.C. R18-2-1101.B.50, 40 CFR § 63.1353(b)(5)]

4. The Permittee shall maintain files of all information (including all reports and notifications) required in a form suitable and readily available for inspection and review as required by 40 CFR § 63.10(b)(1). The files shall be retained for at least five years following the date of each occurrence, measurement, maintenance, corrective action, report, or record. At a minimum, the most recent two years of data shall be retained on site. The remaining three

years of data may be retained off site. The files may be maintained on microfilm, on a computer, on floppy disks, on magnetic tape, or on microfiche.

[A.A.C. R18-2-1101.B.50, 40 CFR § 63.1355(a)]

D. Performance Testing Requirements

1. For each performance test required under Conditions IV.B.4.b, V.F and VI.B.4 of this Attachment, the Permittee shall submit a test plan to the Director in accordance with Condition XVIII.D of Attachment "A."

[A.A.C. R18-2-312.B, A.A.C. R18-2-1101.B.50, 40 CFR § 63.1349(a)]

2. Performance test results shall be documented in complete test reports that contain the following information. [A.A.C. R18-2-1101.B.50, 40 CFR § 63.1349(a)]

   a. A brief description of the process and the air pollution control system;

   b. Sampling location description(s);

   c. A description of sampling and analytical procedures and any modifications to standard procedures;

   d. Test results;

   e. Quality assurance procedures and results;

   f. Records of operating conditions during the test, preparation of standards, and calibration procedures;

   g. Raw data sheets for field sampling and field and laboratory analyses;

   h. Documentation of calculations;

   i. All data recorded and used to establish parameters for compliance monitoring;

   j. Any other information required by the test method; and

   k. All other relevant information.

E. Permit Shield

Compliance with the Conditions in this Section shall be deemed compliance with 40 CFR § 63.1349(a), 40 CFR § 63.1350(a), 40 CFR § 63.1350(b), 40 CFR § 63.1353(b), 40 CFR § 63.1354(b), 40 CFR § 63.1355(a), 40 CFR § 63.1355(b). [A.A.C. R18-2-325]

III. QUARRY, LIMESTONE AND OTHER MATERIAL HANDLING

A. Equipment not subject to New Source Performance Standards

1. Applicability

This Part is applicable to process sources identified in Column 8 of the Equipment List in Attachment "E".

2. Particulate Matter and Opacity

a. Emission Limits and Standards

(1) The Permittee shall not cause, suffer, allow or permit the discharge of particulate matter into the atmosphere except as fugitive emissions in any one hour from any process source, in total quantities in excess of the amounts calculated by the equations set forth below:

(a) For process sources having a process weight rate of 60,000 pounds per hour (30 tons per hour) or less, the maximum allowable emissions shall be determined by the following equation:

$$E = 3.59\ P^{0.62}$$

Where:

E = the maximum allowable particulate emissions rate in pounds-mass per hour.

P = the process weight rate in tons-mass per hour.

(b) For process sources having a process weight rate greater than 60,000 pounds per hour (30 tons per hour), the maximum allowable emissions shall be determined by the following equation:

$$E = 17.31\ P^{0.16}$$

where E and P are as defined in Condition III.A.2.a(1)(a) above.
[Arizona SIP R 9-3-522.A.2]

(2) The Permittee shall not cause, suffer, allow, or permit the opacity of any plume or effluent to be greater than 20 percent as measured by EPA Reference Method 9. [A.A.C. R 18-2-702.B]

b. Air Pollution Control Requirements

(1) *The Permittee shall operate the following air dust collectors in a manner consistent with good air pollution control practice for minimizing particulate matter emissions from the process sources subject to this Part*. This condition is not material in the event failure to comply is due to a sudden and unavoidable breakdown of the process or the control equipment, resulted from unavoidable conditions during a startup or shutdown, or resulted from upset of operations.

B2-DC1, B3-DC1, B5-DC1, B5-DC2, B5-DC3, B7-DC1, B6-DC3, B8-DC1, B8-DC2, B9-DC1, B9-DC2, B9-DC3, B9-DC5, C2-DC1
[A.A.C. R18-2-306.A.2, A.A.C. R18-2-331.A.3.e, A.A.C. R18-2-331.B]
[Material Permit Condition is indicated by underline and italics]

(2) Spray bar pollution controls shall be utilized in accordance with "EPA Control of Air Emissions From Process Operations In The Rock Crushing

Industry" (EPA 340/1-79-002), "Wet Suppression System" (pages 15-34, amended as of January 1979 (and no future amendments or editions)), as incorporated herein by reference and on file with the Office of the Secretary of State, with placement of spray bars and nozzles as required by the Director to minimize air pollution. [A.A.C. R18-2-722.D]

(3) The Permittee shall control fugitive emissions from process sources subject to this Part in accordance with the methods listed in Condition II.B.1.c of Attachment "B". [A.A.C. R18-2-722.E]

c. Monitoring, Recordkeeping and Reporting Requirements

(1) The Permittee shall monitor stack emissions from the affected facilities subject to this Part in accordance with the OMP developed pursuant to Condition II.A.5 of this Attachment. [A.A.C. R18-2-306.A.3.c]

(2) The Permittee shall conduct a Visible Emissions Observation Procedure, as described in Condition II.C.2 of Attachment "B", for non-point sources, and where applicable, fugitive emissions from the affected facilities subject to this Section. [A.A.C. R18-2-306.A.3.c]

(3) *The Permittee shall install, calibrate*, maintain, and operate *monitoring devices which can be used to determine daily the process weight of crushed stone produced. The weighing devices shall have an accuracy of ± five percent over their operating range.* This condition is not material in the event failure to comply is due to a sudden and unavoidable breakdown of the process or the control equipment, resulted from unavoidable conditions during a startup or shutdown, or resulted from upset of operations.
[Arizona SIP 9-3-522.B.1, A.A.C. R18-2-331.A.3.c and A.A.C. R18-2-331.B] [Material Permit Conditions are indicated with underline and italics]

(4) The Permittee shall demonstrate compliance with the above condition by conducting, and maintaining records of, annual calibration checks.
[A.A.C. R18-2-306.A.3.c]

(5) The Permittee shall maintain a record of daily production rates of gravel or crushed stone produced. [Arizona SIP 9-3-522.B.2]

d. Performance Testing Requirements

(1) To demonstrate compliance with Condition III.A.2.a(2), the Permittee shall conduct performance tests on each dust collector listed in Condition III.A.2.b(1) once during the permit term in accordance with EPA Reference Method 9 of 40 CFR Part 60, Appendix A.
[A.A.C. R18-2-312.A, A.A.C. R18-2-306.A.3.c]

(2) To demonstrate compliance with Condition III.A.2.a(1), the Permittee shall conduct performance test once during the permit term on the following dust collectors in accordance with EPA Reference Method 5 of 40 CFR 60, Appendix A: [A.A.C. R18-2-312.A, A.A.C.

R18-2-306.A.3.c]

(a) Dust Collectors B2-DC1, B3-DC1.

(b) Any one of the following Dust Collectors: B5-DC1, B5-DC2, B5-DC3, and B7-DC1.

(c) One of the following Dust Collectors: B9-DC2 and B9-DC3.

(d) Any one of the following Dust Collectors: B8-DC1, B8-DC2, B9-DC1, B9-DC5 and C2-DC1.

3. Permit Shield

Compliance with this Part shall be deemed compliance with Arizona SIP R 9-3-522.A.2, 9-3-522.B.1, 9-3-522.B.2, A.A.C. R18-2-702.B, A.A.C. R18-2-722.D and A.A.C. R18-2-722.E. [A.A.C. R18-2-325]

B. Equipment Subject to New Source Performance Standards

1. Applicability

This Part is applicable to process sources identified in Column 8 of the Equipment List in Attachment "E".

2. Emission Limits/Standards

a. *The Permittee shall not cause to be discharged into the atmosphere from any affected facility any stack emissions which:*

(1) Contain particulate matter in excess of 0.05 grams/dry standard cubic meter; and

(2) *Exhibit greater than 7 percent opacity.*

[40 CFR 60.672.a and A.A.C. R18-2-331.A.3.f]
[Material permit conditions are indicated by underline and italics]

b. *The Permittee shall not cause to be discharged into the atmosphere from any transfer point on belt conveyors or from any other affected facility any fugitive emissions which exhibit greater than 10 percent opacity.*

[40 CFR 60.672.b and A.A.C. R18-2-331.A.3.f]
[Material permit conditions are indicated by underline and italics]

3. Air Pollution Control Equipment

At all times, including periods of startup, shutdown, and malfunction, the Permittee shall, to the extent practicable, maintain and operate all affected facilities including associated air pollution control equipment in a manner consistent with good air pollution control practice for minimizing air emissions. Determination of whether acceptable operating and maintenance procedures are being used will be based on information available to the Director, which may include, but is not limited to, monitoring results, opacity observations, review of operating and maintenance procedures, and inspection of the source.

[40 CFR §60.11(d)]

4. Monitoring, Reporting and Recordkeeping Requirements

a. The Permittee shall monitor stack emissions from the affected facilities subject to this Part in accordance with the OMP developed pursuant to Condition II.A.5 of this Attachment. [A.A.C. R18-2-306.A.3.c]

b. The Permittee shall conduct a Visible Emissions Observation Procedure, as described in Condition II.C.2 of Attachment "B", for non-point sources, and where applicable, fugitive emissions from the affected facilities subject to this Section. [A.A.C. R18-2-306.A.3.c]

5. Permit Shield

Compliance with this Part shall be deemed compliance with 40 CFR §60.672(a) and 40 CFR §60.672(b) for the affected facilities subject to this Part. [A.A.C.R18-2-325]

IV. COAL MILL SYSTEM

A. Applicability

This Section is applicable to process sources identified in Column 8 of the Equipment List in Attachment "E".

B. Particulate Matter and Opacity

1. Emission Limitations and Standards

a. The Permittee shall not cause, allow or permit the discharge of particulate matter from the equipment that commenced construction prior to October 28, 1974, and that did not commence modifications after October 27, 1974, into the atmosphere, in any one hour from any coal preparation plant in total quantities in excess of the amounts calculated by one of the following equations:

(1) For process sources having a process weight rate of 60,000 pounds per hour (30 tons per hour) or less, the maximum allowable particulate emissions shall be determined by the following equation:

$$E = 3.59 \times P^{0.62}$$

Where:

E = the maximum allowable emissions rate in pounds per hour.

P = the process weight rate in tons per hour.
[Arizona SIP Rule 9-3-516.A2.a]

(2) For process sources having a process weight rate greater than 60,000 pounds per hour (30 tons per hour), the maximum allowable emissions shall be determined by the following equation**:** [Arizona SIP Rule 9-3-516.A2.b]

$$E = 17.31 \times P^{0.16}$$

Where "E" and "P" are defined as in Condition IV.B.1.a(1) above.

b. Except as required in Condition IV.B.1.c below, the Permittee shall not cause or allow to be emitted into the atmosphere from any existing source subject to this Section any gases which exhibit opacity greater than 20 percent as determined by EPA Reference Method 9 in Appendix A to 40 CFR Part 60.

[A.A.C. R18-2-702.B.1]

c. The Permittee shall not cause to be discharged into the atmosphere from any conveying system transfer point from any coal mill to the kiln any gases which exhibit greater than 10 percent opacity.

[A.A.C. R18-2-1101.B.50, 40 CFR §63.1340(b)(7), 40 CFR §63.1348]

2. Air Pollution Control Requirements

a. *The Permittee shall operate the air dust collectors H3-K4-DC1 & H3-K4-DC2 in a manner consistent with good air pollution control practice for minimizing particulate matter emissions from the process sources subject to this Section*. This condition is not material in the event failure to comply is due to a sudden and unavoidable breakdown of the process or the control equipment, resulted from unavoidable conditions during a startup or shutdown, or resulted from upset of operations.

[A.A.C. R18-2-306.A.2, A.A.C. R18-2-331.A.3.e and A.A.C. R18-2-331.B]
[Material Permit Condition is indicated by underline and italics]

b. The Permittee shall control fugitive emissions from process sources subject to this Part in accordance with the methods listed in Conditions II.B.1.c of Attachment "B". [A.A.C. R18-2-716.E]

3. Monitoring, Recordkeeping and Reporting Requirements

a. The Permittee shall conduct a Visible Emissions Observation Procedure, as described in Condition II.C.2 of Attachment "B", for non-point sources, and where applicable, fugitive emissions from the affected facilities subject to the opacity standard under Condition IV.B.1.b. [A.A.C. R18-2-306.A.3.c]

b. For the dust collectors H3-K4-DC1 & -DC2, the Permittee shall monitor stack emissions in accordance with the OMP developed pursuant to Condition II.A.5 of this Attachment. [A.A.C. R18-2-1101.B.50, 40 CFR §63.1350(a)(4)]

4. Performance Testing Requirements

To demonstrate compliance with Condition IV.B.1.c, the Permittee shall conduct one performance test on each dust collector listed in Condition IV.B.2.a during the permit term in accordance with EPA Reference Method 9 of 40 CFR Part 60, Appendix A.

[A.A.C. R18-2-1101.B.50, 40 CFR §63.1349(b)(2)]

a Each performance test shall be conducted under the conditions that exist when the affected source is operating at the representative performance conditions in accordance with 40 CFR § 63.7(e). [A.A.C. R18-2-1101.B.50, 40 CFR §63.1349(b)(2)]

b. The maximum 6-minute average opacity exhibited during the test period shall be used to determine whether the affected source is in initial compliance with the opacity standard. [A.A.C. R18-2-1101.B.50, 40 CFR §63.1349(b)(2)]

c. The duration of the Method 9 performance test shall be 3 hours (thirty 6-minute

averages), except that the duration of the Method 9 performance test may be reduced to 1 hour if following Conditions are met:

(1) There are no individual readings greater than 10 percent opacity;

(2) There are no more than three readings of 10 percent for the first 1-hour period.

[A.A.C. R18-2-1101.B.50, 40 CFR §63.1349(b)(2)]

C. Permit Shield

Compliance with the requirements of this Section shall be deemed compliance with Arizona SIP Rules 9-3-516.A2.a and 516.A.2.b, A.A.C. R18-2-702.B.1, A.A.C. R18-2-716.E, 40 CFR §63.1340(b)(7), 40 CFR §63.1348, 40 CFR §63.1349(b)(2) and 40 CFR §63.1350(a)(4).

[A.A.C. R18-2-325]

V. KILNS AND CLINKER COOLERS

A. Applicability

This Section is applicable to process sources identified in Column 8 of the Equipment List in Attachment "E".

B. Emission Limits and Standards

1. The Permittee shall not cause to be discharged into the atmosphere from any kiln or in-line kiln/raw mill, any gases which:

a. Contain particulate matter in excess of 0.15 kilogram/megagram (0.30 pounds per ton) of feed (dry basis) to the kiln.

[A.A.C R18-2-1101.B.50, 40 CFR §63.1343(b)(1), A.A.C. R9-3-505.B.1.a]

b. Exhibit opacity greater than 20 percent.

[A.A.C R18-2-1101.B.50, 40 CFR §63.1343(b)(2), A.A.C. R9-3-505.B.1.b]

c. Contain dioxins/furans (D/F) in excess of:

[A.A.C R18-2-1101.B.50, 40 CFR §63.1343(b)(3)]

(1) 0.2 nanograms per dry standard cubic meter (8.7×10^{-11} grains per dry standard cubic foot) (TEQ) corrected to seven percent oxygen; or

(TEQ means the international method of expressing toxicity equivalents for dioxins and furans as defined in U.S. EPA, Interim Procedures for Estimating Risks Associated with Exposures to Mixtures of Chlorinated Dibenzo-p-dioxins and -dibenzofurans (CDDs and CDFs))

(2) 0.40 nanograms per dry standard cubic meter (1.7×10^{-10} grains per dry standard cubic foot) (TEQ) corrected to seven percent oxygen, when the average of the performance test run average temperatures at the inlet to the particulate matter control device is 204°C (400°F) or less.

d. Contain an amount in excess of 6 pounds of sulfur oxides, calculated as sulfur dioxide, per ton cement kiln feed. [A.A.C. R-18-2-705.D]

2. The Permittee shall not cause to be discharged into the atmosphere from any clinker cooler, any gases which:

   a. Contain particulate matter in excess of 0.050 kilogram/Megagram (0.10 pounds per ton) of feed (dry basis) to the kiln.
   [A.A.C R18-2-1101.B.50, 40 CFR §63.1345(a)(1), A.A.C. R9-3-505.B.2.a]

   b. Exhibit opacity greater than 10 percent.
   [A.A.C R18-2-1101.B.50, 40 CFR §63.1345(a)(2) A.A.C. R9-3-505.B.2.b]

3. *Total emissions of carbon monoxide from Kilns 1, 2, 3, and Kiln 4 in-line kiln/raw mill shall not exceed 5,069 tons per year (rolling twelve-month total calculated at the end of each month).* [A.A.C. R18-2-306.01, A.A.C. R18-2-331.A.3.a]
   [Material Permit Conditions are indicated with underline and italics]

4. *Total emissions of nitrogen oxides from Kilns 1, 2, 3, and Kiln 4 in-line kiln/raw mill shall not exceed 5,144 tons per year (rolling twelve-month total calculated at the end of each month).* [A.A.C. R18-2-306.01, A.A.C. R18-2-331.A.3.a]
   [Material Permit Conditions are indicated with underline and italics]

C. Operating Limitations

1. The Permittee shall operate Kilns 1, 2, and 3 such that the temperature of the gas at the inlet to the kiln particulate matter control device does not exceed the applicable temperature limit determined in accordance with Condition V.F.2.a(8) of this Attachment.
   [A.A.C R18-2-1101.B.50, 40 CFR §63.1344(a) and (b)]

2. The Permittee shall operate Kiln 4 in-line kiln/raw mill such that:
   [A.A.C R18-2-1101.B.50, 40 CFR §63.1344(a) and (b)]

   a. When the inline raw mill is operating, the temperature for the Kiln 4 in-line kiln/raw mill exhaust does not exceed the applicable temperature limit determined in accordance with Condition V.F.2.a(8) of this Attachment and established during the performance test when the raw mill was operating.
   [A.A.C R18-2-1101.B.50, 40 CFR §63.1344(a)(1)]

   b. When the inline raw mill is not operating, the temperature for the Kiln 4 in-line kiln/raw mill exhaust does not exceed the applicable temperature limit determined in accordance with Condition V.F.2.a(8) of this Attachment and established during the performance test when the raw mill was not operating.
   [A.A.C R18-2-1101.B.50, 40 CFR §63.1344(a)(2)]

3. The Permittee must implement good combustion practices (GCP) designed to minimize THC from fuel combustion. GCP include training all operators and supervisors to operate and maintain the kiln and calciner, and the pollution control systems in accordance with good engineering practices. The training shall include methods for minimizing excess emissions. [A.A.C R18-2-1101.B.50, 40 CFR §63.1344(f)]

4. All kilns and in-line kilns/raw mills must remove (i.e. not recycle to the kiln) from the kiln system sufficient cement kiln dust to maintain the desired product quality.
   [A.A.C R18-2-1101.B.50, 40 CFR §63.1344(h)]

5. Fuel Limitations

The Permittee shall only burn the fuels authorized in Section VII of this Attachment.
[Permit M191365P1-99 Condition IV, Permit Revision No. 1000547 Condition VII]

D. Air Pollution Control Requirements

1. *At all times, including periods of startup, shutdown, and malfunction, the Permittee shall operate* and maintain *Dust Collector H5-5-GB in a manner consistent with good air pollution control practice for minimizing PM and PM_{10} emissions from Kiln 1, Kiln 2, and Kiln 3*. This condition is not material in the event failure to comply is due to a sudden and unavoidable breakdown of the process or the control equipment, resulted from unavoidable conditions during a startup or shutdown, or resulted from upset of operations.
[A.A.C. R18-2-306.A.2, A.A.C. R18-2-331.A.3.e & A.A.C. R18-2-331.B]
[Material Permit Conditions are indicated with underline and italics]

2. *At all times, including periods of startup, shutdown, and malfunction, the Permittee shall operate* and maintain *Dust Collector H5-GB in a manner consistent with good air pollution control practice for minimizing PM and PM_{10} emissions from Kiln 4 in-line kiln/ raw mill.* This condition is not material in the event failure to comply is due to a sudden and unavoidable breakdown of the process or the control equipment, resulted from unavoidable conditions during a startup or shutdown, or resulted from upset of operations.
[A.A.C. R18-2-306.A.2, A.A.C. R18-2-331.A.3.e & A.A.C. R18-2-331.B]
[Material Permit Conditions are indicated with underline and italics]

3. *At all times including periods of startup, shutdown, and malfunction, the Permittee shall*, maintain *and operate Dust Collectors H2-1-DC when Clinker Cooler 1 is in operation, H2-2-DC when Clinker Cooler 2 is in operation, H2-3-DC when Clinker Cooler 3 is in operation, and H2-GB when Clinker Cooler 4 is in operation in a manner consistent with good air pollution control practice for minimizing PM and PM_{10} emissions*. This condition is not material in the event failure to comply is due to a sudden and unavoidable breakdown of the process or the control equipment, resulted from unavoidable conditions during a startup or shutdown, or resulted from upset of operations.
[A.A.C. R18-2-306.A.2, A.A.C. R18-2-331.A.3.e & A.A.C. R18-2-331.B] [Material Permit Conditions are indicated with underline and italics]

E. Monitoring, Recordkeeping and Reporting Requirements

1. Opacity Monitoring

a. *The Permittee shall install, calibrate*, maintain, and operate *continuous opacity monitoring systems (COMS) in accordance with Condition V.E.1.c below to continuously monitor the opacity of visible emissions from Kilns 1, 2 and 3, Kiln 4 in-line kiln/raw mill, and Clinker Cooler 4 stacks.* This condition is not material in the event failure to comply is due to a sudden and unavoidable breakdown of the process or the control equipment, resulted from unavoidable conditions during a startup or shutdown, or resulted from upset of operations.
[A.A.C. R18-2-1101.B.50, 40 CFR § 63.1350(c) and (d), R18-2-331.A.3.c, R18-2-331.B]
[Material Permit Conditions are indicated with underline and italics]

b. The Permittee shall monitor the opacity from each emission point where emissions are vented from Clinker Coolers 1, 2 and 3 as per Conditions V.E.1.b(1) and (2) below. In the event the Permittee modifies the stacks serving Clinker Coolers 1, 2 and 3, the Permittee shall follow the requirements in Condition V.E.1.a above.
[A.A.C. R18-2-1101.B.5040 CFR § 63.1350(d)(2)]

(1) The Permittee shall perform daily visual opacity observation from each stack in accordance with the procedures of EPA Reference Method 9 of 40 CFR Part 60, Appendix A. The Method 9 test shall be conducted while each cooler is operating at the representative performance conditions. The duration of the Method 9 test shall be at least 30 minutes each day.

(2) Use the Method 9 procedures to monitor and record the average opacity for each six-minute period during the test.

c. Continuous Opacity Monitoring System (COMS) Requirements

(1) Each COMS shall meet the requirements of Performance Specification 1, Specifications and test procedures for opacity continuous emission monitoring systems in stationary sources, in Appendix B to 40 CFR Part 60. [A.A.C R18-2-1101.B.50, 40 CFR § 63.1350(c) and (d)]

(2) For each COMS the Permittee shall maintain all records required by 40 CFR § 63.10(c). [A.A.C R18-2-1101.B.50, 40 CFR § 63.1355(c) and (d)]

d. If the average opacity of visible emissions from any kiln stack for any 6-minute block period exceeds 20 percent, this shall constitute a period of excess emissions and a violation of Condition V.B.1.b of this Attachment.
[A.A.C. R18-2-1101.B.50, 40 CFR § 63.1350(c)(3)]

e. If the average opacity of visible emissions from any Clinker Cooler Stack for any 6-minute block period exceeds 10 percent, this shall constitute a period of excess emissions and a violation of Condition V.B.2.b of this Attachment.
[A.A.C. R18-2-1101.B.50, 40 CFR § 63.1350 (d)(3)]

2. Particulate Matter Emission Monitoring

a. *The Permittee shall install, calibrate*, maintain, and operate *a particulate matter continuous emission monitoring system (PM CEMS) to measure the particulate matter discharged to the atmosphere from Kilns 1, 2, 3, and Kiln 4 in-line kiln/raw mill.* This condition is not material in the event failure to comply is due to a sudden and unavoidable breakdown of the process or the control equipment, resulted from unavoidable conditions during a startup or shutdown, or resulted from upset of operations. All requirements relating to installation, calibration, maintenance, operation or performance of the PM CEMS and implementation of the PM CEMS are deferred pending further rulemaking.
[A.A.C. R18-2-1101.B.50, R18-2-331.A.3.c, R18-2-331.B, 40 CFR §63.1350(k)]
[Material Permit Conditions are indicated with underline and italics]

b. Until such time that a PM CEMS is installed, the Permittee shall monitor particulate matter emissions from Kilns 1, 2, 3, and Kiln 4 in-line kiln/raw mill in the following manner: [A.A.C. R18-2-306.A.3.c]

(1) The Permittee shall evaluate opacity measurements from the COM system on a 2-hour rolling average. If the 2-hour rolling average opacity exceeds 15 percent, the Permittee shall initiate investigation of the control equipment within 24 hours of the occurrence, to identify any need for corrective action. If corrective action is required, the Permittee shall

implement such corrective action as soon as practicable in order to avert or minimize possible exceedances of the particulate matter standards in Condition V.B.1.a of this Attachment. If the 2-hour rolling average opacity remains above 15 percent for 72 consecutive hours after the first occurrence, the Permittee shall submit a schedule to the Director that satisfies the requirements of Condition XII.D of Attachment "A". An opacity measurement of 15% is not by itself an indication of a violation of the particulate matter standard.

(2) The Permittee shall maintain a record of 2-hour rolling average opacity measurements performed in accordance with Condition (1) above, and of any corrective actions taken. The record of corrective actions taken shall include the date and time that the 2-hour rolling average opacity exceeded 15 percent, and the date and time the corrective action, if any, was completed.

3. The Permittee shall monitor D/F emissions in accordance with the following:

a. *The Permittee shall install, calibrate,* maintain, and continuously operate *a continuous monitor to record the temperature of the exhaust gases from Kilns 1, 2, 3, and Kiln 4 in-line kiln/ raw mill at the inlet to, or upstream of, the particulate matter control devices.* This condition is not material in the event failure to comply is due to a sudden and unavoidable breakdown of the process or the control equipment, resulted from unavoidable conditions during a startup or shutdown, or resulted from upset of operations.

[A.A.C. R18-2-1101.B.50, 40 CFR §63.1350(f)(1), R18-2-331.A.3.c, R18-2-331.B]
[Material Permit Conditions are indicated with underline and italics]

(1) The recorder response range shall include zero and 1.5 times either of the average temperatures established according to the requirements in Condition V.F.2.a(8) of this Attachment.

(2) The reference method shall be a National Institute of Standards and Technology calibrated reference thermocouple-potentiometer system or alternate reference subject to the approval of the Director.

b. The Permittee shall monitor and continuously record the temperature of the exhaust gases from Kilns 1, 2, 3, and Kiln 4 in-line kiln/raw mill at the inlet to the particulate matter control devices. [A.A.C. R18-2-1101.B.50, 40 CFR §63.1350(f)(2)]

c. The three-hour rolling average temperature shall be calculated as the average of 180 successive one-minute average temperatures.

[A.A.C. R18-2-1101.B.50, 40 CFR §63.1350(f)(3)]

d. Periods of time when one-minute averages are not available shall be ignored when calculating three-hour rolling averages. When one-minute averages become available, the first one-minute average is added to the previous 179 values to calculate the three-hour rolling average.

[A.A.C. R18-2-1101.B.50, 40 CFR §63.1350(f)(4)]

e. When the operating status of the in-line kiln/raw mill is changed from off to on, or from on to off the calculation of the three-hour rolling average temperature must begin anew, without considering previous recordings.

[A.A.C. R18-2-1101.B.50, 40 CFR §63.1350(f)(5)]

f. *The calibration of all thermocouples and other temperature sensors shall be verified at least once every three months.* This condition is not material in the event failure to comply is due to a sudden and unavoidable breakdown of the process or the control equipment, resulted from unavoidable conditions during a startup or shutdown, or resulted from upset of operations.

[40 CFR §63.1350(f)(6), A.A.C. R18-2-1101.B.50, R18-2-331.A.3.c, and R18-2-331.B]
[Material Permit Conditions are indicated with underline and italics]

g. The Permittee shall conduct an inspection of the components of the combustion system of each kiln at least once per year.

[AAC R18-2-1101.B.47, 40 CFR §63.1350(i)]

4. *The Permittee shall calibrate*, maintain and operate *continuous emission monitoring systems to measure carbon monoxide (CO) and nitrogen oxides (NO_X) mass emissions from Kilns 1,2,3, and Kiln 4 in-line kiln/raw mill.* This condition is not material in the event failure to comply is due to a sudden and unavoidable breakdown of the process or the control equipment, resulted from unavoidable conditions during a startup or shutdown, or resulted from upset of operations. [A.A.C. R1-2-306.A.3.c, A.A.C. R18-2-331.A.3.c and R18-2-331.B]
[Material Permit Conditions are indicated with underline and italics]

a. The continuous emission rate monitoring systems shall meet the following requirements:

(1) 40 CFR Part 60, Appendix B, "Performance Specifications."

(a) The NO_X continuous emission rate monitoring systems shall meet the requirements of Performance Specification 2, Specifications and test procedures for SO_2 and NO_X continuous emission monitoring systems in stationary sources, in Appendix B to 40 CFR Part 60.

(b) The CO continuous emission rate monitoring system shall meet the requirements of Performance Specification 4a, Specifications and test procedures for carbon monoxide continuous emission monitoring systems in stationary sources, in Appendix B to 40 CFR Part 60.

(c) The NO_X and CO continuous emission rate monitoring systems shall meet the requirements of Performance Specification 6, Specifications and test procedures for continuous emission rate monitoring systems in stationary sources, in Appendix B to 40 CFR Part 60.

(2) 40 CFR Part 60, Appendix F, "Quality Assurance Procedures."

(3) The Permittee shall continue to implement the ADEQ approved Quality Assurance/Quality Control Plan which includes procedures for dealing with data gaps based on the procedures contained in 40 CFR Part 75, Subpart D (40 CFR § 75.30).

b. Instrument span shall be such that the expected output is 50 to 70 percent of span.

c. All data shall be retained on site in electronic form and shall be available for review by any authorized ADEQ representative.

d. The Permittee shall maintain a file of all measurements, including the continuous monitoring system and performance testing data; continuous monitoring system performance evaluations; all continuous monitoring system or monitoring device calibration checks; adjustments and maintenance performed on these systems or devices. These data shall be recorded in a permanent form suitable for inspection. The file shall be retained for at least five years following the date of such measurements, maintenance, reports and records.

e. Except for system breakdowns, repairs, calibration checks, and zero and span adjustments, the Permittee shall meet minimum frequency of operation requirements as follows: the continuous monitoring system shall complete a minimum of one cycle of operation (sampling, analyzing, and data recording) for each successive 15-minute period.

f. For continuous monitoring system measurements, one-hour arithmetic averages shall be computed from four or more data points equally spaced over each one-hour period. Data recorded during periods of continuous monitoring system breakdowns, repairs, calibration checks, and zero and span adjustments shall not be included in the data averages computed under this condition.

g. The Permittee shall calculate and record the total carbon monoxide and nitrogen oxides emissions from all kilns at the end of each month, for the preceding 12-month period. This record shall be retained for at least five years following the date of such measurements.

h. The following shall be considered periods of excess emissions:

(1) All 12-month periods for which the NO_X emission rate to the atmosphere as determined in accordance with Condition V.E.4.g exceeds the applicable emission standard in Condition V.B.4 of this Attachment.

(2) All 12-month periods for which the CO emission rate to the atmosphere as determined in accordance with Condition V.E.4.g exceeds the emission standard in Condition V.B.3 of this Attachment.

5. The Permittee shall keep the following records readily available for inspection at the cement plant: [A.A.C. R18-2-705.E and A.A.C. R18-2-306.A.3.c]

a. The total quantity of each raw material processed in each kiln per day.

b. The total quantity of clinker produced per day.

c. The type and amount of each fuel component utilized in each kiln per day.

F. Testing Requirements

1. Test Methods and Procedures for Particulate Matter and Opacity of Visible Emissions

a. The Permittee shall demonstrate compliance with Condition V.B.1.a of this Attachment by conducting annual performance tests on the kilns. The Permittee shall demonstrate compliance with Condition V.B.2.a of this Attachment by conducting performance tests on the clinker coolers once every five years. Annual performance tests for Kiln 4 in-line kiln/raw mill shall be performed in the

configuration (in-line raw mill in operation or in-line raw mill not in operation) that produced the higher emission rate for particulate matter during the initial test required by 40 CFR Part 63, Subpart LLL.

[A.A.C. R18-2-1101.B.50, 40 CFR § 63.1349(b)(1), and 40 CFR § 63.1349(c)]

(1) EPA Reference Method 5 in Appendix A to 40 CFR Part 60 shall be used to determine PM emissions.

(2) Each performance test shall consist of three separate runs under the conditions that exist when the affected source is operating at the representative performance conditions in accordance with 40 CFR § 63.7(e).

(3) Each run shall be conducted for at least one hour, and the minimum sample volume shall be 30 dscf.

(4) The average of the three runs shall be used to determine compliance.

(5) Suitable methods shall be used to determine the Rotary Kiln feed rate, except for fuels, for each run.

(6) The emission rate, E, shall be computed for each run using the following equation:

$$E = \frac{C_s \times Q_{sd}}{P}$$

Where:

E = emission rate of PM, lb per ton of Kiln feed.

C_s = concentration of PM, lb/dscf.

Q_{sd} = volumetric flow rate of effluent gas, dscf/hr.

P = total Kiln feed (dry basis), tons/hr.

b. The opacity exhibited during the period of the EPA Reference Method 5 performance tests shall be determined through the use of the COMS or Method 9 test as required by Condition V.E.1 of this Attachment. The maximum six-minute average opacity shall be determined during each EPA Reference Method 5 test run and shall be used to demonstrate compliance with Conditions V.B.1.b and V.B.2.b.

[A.A.C. R18-2-1101.B.50, 40 CFR § 63.1349(b)(1)(v)]

c. If the Permittee plans to undertake a change in operations that may adversely affect compliance with the particulate matter emission standards under Conditions V.B.1.a of this Attachment, the Permittee must conduct a performance test specified in Conditions V.F.1.a. [A.A.C. R18-2-1101.B.50, 40 CFR § 63.1349(e)(2)]

2. Test Methods and Procedures for Dioxins/Furans Emissions

a. The Permittee shall demonstrate compliance with Condition V.B.1.c of this Attachment using the following test methods and procedures.

[A.A.C. R18-2-1101.B.50, 40 CFR § 63.1349(b)(3)]

(1) EPA Reference Method 23 in Appendix A to 40 CFR Part 60 shall be used to determine D/F emissions for each kiln.

(2) For Kiln 4, the Permittee shall demonstrate compliance by conducting two separate performance tests: 1) while the Inline Raw Mill is under normal operating conditions, 2) while the Inline Raw Mill is not operating.

(3) Each performance test shall consist of three separate runs; each run shall be conducted under the conditions that exist when the affected source is operating at the representative performance conditions in accordance with §63.7(e).

(4) The duration of each run shall be at least 3 hours, and the sample volume for each run shall be at least 2.5 dry standard cubic meters.

(5) The concentration shall be determined for each run, and the arithmetic average of the concentrations measured for the three runs shall be calculated and used to determine compliance.

(6) The temperature at the inlet of the baghouse H5-5-GB (for Kilns 1 to 3) or at the inlet of Baghouse H5-GB (for Kiln 4) must be continuously recorded during the period of the Method 23 test, and the continuous temperature record(s) must be included in the performance test report.

(7) One-minute average temperatures must be calculated for each minute of each run of the test.

(8) The run average temperature must be calculated for each run, and the average of the run average temperatures must be determined and included in the performance test report. The average of the run average temperatures will determine the applicable temperature limit in Condition V.C.2 of this Attachment.

b. Performance tests required under Condition V.F.2.a above shall be repeated every 30 months. [A.A.C. R18-2-1101.B.50, 40 CFR § 63.1349(d)]

c. If the Permittee plans to undertake a change in operations that may adversely affect compliance with the D/F standard under Condition V.B.1.c of this Attachment, the Permittee must conduct a performance test as specified in Conditions V.F.2.a(1) through Conditions V.F.2.a(8) of this Attachment and establish new temperature limit(s). [A.A.C. R18-2-1101.B.50, 40 CFR § 63.1349(e)(1)]

d. In preparation for and while conducting a performance test required in Condition V.F.2.c above, the Permittee may operate under the planned operational change conditions for a period not to exceed 360 hours, provided that the following conditions are met. The source shall submit temperature and other monitoring data that are recorded during the pretest operations.
[A.A.C. R18-2-1101.B.50, 40 CFR § 63.1349(e)(3)]

(1) The Permittee shall provide the Director written notice at least 60 days prior to undertaking an operational change that may adversely affect compliance with Condition V.B.1.c of this Attachment, or as soon as practicable where 60 days advance notice is not feasible. This notice shall

include a description of the planned change, the permit condition that may be affected by the change and a schedule for completion of the performance test required under Condition V.F.2.c, including when the planned operational change period would begin.

(2) The performance test results must be documented in a test report according to Condition II.D.2 of this Attachment.

(3) A test plan must be made available to the Director prior to testing, if requested.

(4) The performance test must be conducted, and completed within 360 hours after the planned operational change period begins.

3. Test Method and Procedure for Sulfur Dioxide Emissions

The Permittee shall conduct a performance test annually in accordance with EPA Reference Method 6 of 40 CFR Part 60, Appendix A, to measure the amount of sulfur dioxide being emitted into the atmosphere from Kilns 1, 2, 3, and Kiln 4 in-line kiln/raw mill. The tests shall be conducted while burning the fuel or fuel mix containing the highest possible sulfur content for the year. [A.A.C. R18-2-312.A, A.A.C. R18-2-306.A.3.c]

G. Permit Shield

Compliance with this Section shall be deemed compliance with, A.A.C. R18-2-705.D, 705.E, A.A.C. R9-3-505.B.1, A.A.C. R9-3-505.B.2, 40 CFR 63.1343(b), 63.1344(a), 63.1344(b), 63.1344(f), 63.1344(h), 63.1345, 1349(b)(1), 1349(b)(3), 63.1349(d), 63.1349(e), 63.1350(c), 63.1350(d), 63.1350(f), 63.1350(k), 40 CFR 63.1350(i), 63.1354(b)(9), and 1354(b)(10). [A.A.C. R18–2-325]

VI. OTHER SYSTEMS (EXCEPT KILNS AND CLINKER COOLERS) SUBJECT TO 40 CFR PART 63 SUBPART LLL

A. Applicability

This Section is applicable to following affected sources identified in Column 8 of the Equipment List in Attachment "E":

1. Raw Mills
2. Finish Mills
3. Kiln Feed Silos
4. Proportioning Silos
5. Bagging System
6. Bulk Loading/Unloading System
7. Storage Bin, and
8. Transfer Points

B. Particulate Matter and Opacity

1. Emission Limits and Standards

a. The Permittee shall not cause, allow or permit the discharge of particulate matter from the equipment that commenced construction prior to August 17, 1971, to exceed the amounts calculated by one of the following equations:

(1) For process sources having a process weight rate of 60,000 pounds per hour (30 tons per hour) or less, the maximum allowable emissions shall be determined by the following equation:

[Arizona SIP R9-3-505.B.3, R9-3-502.A.2]

$$E = 3.59\ P^{0.62}$$

where:

E = the maximum allowable particulate emissions rate in pounds-mass per hour.

P = the process weight rate in tons-mass per hour.

(2) For process sources having a process weight rate greater than 60,000 pounds per hour (30 tons per hour), the maximum allowable emissions shall be determined by the following equation:

$$E = 17.31P^{0.16}$$

where "E" and "P" are defined as indicated in Condition VI.B.1.a(1) above.

b. *The Permittee shall not cause or allow to be emitted into atmosphere from any dust collector gases which contain PM and PM_{10} emissions in excess of the following rates.* [AAC R18-2-306.01, A.A.C. R18-2-331.A.3.a]

[Material Permit Conditions are indicated with underline and italics]

Dust Collector ID	PM Emission Limit (lbs/hr)	PM_{10} Emission Limit (lbs/hr)
H2-DC2	0.01	0.01
C2-DC3	0.334	0.334
D4-DC1	1.671	1.671
D4-DC2	0.668	0.668
F2-DC4	0.062	0.062
AC-DC1	0.373	0.373
CM-DC17	0.497	0.497
D2-DC4	0.166	0.166

c. The Permittee shall not cause to be discharged into the atmosphere, from the mill sweep or air separator air pollution control devices of raw and finish mills any gases which exhibit greater than 10 percent opacity.

[A.A.C. R18-2-1101.B.50, 40 CFR §63.1347]

d. The Permittee shall not cause to be discharged into the atmosphere from any raw

material, clinker, or finished product storage bin; conveying system transfer point; bagging system; and bulk loading or unloading system any gases which exhibit greater than 10 percent opacity. [A.A.C. R18-2-1101.B.50, 40 CFR §63.1348]

2. Air Pollution Control Requirements

At all times including periods of startup, shutdown, and malfunction, the Permittee shall, to the extent practicable, maintain and *operate all affected sources and the following dust collectors in a manner consistent with good air pollution control practice for minimizing particulate matter emissions*. This condition is not material in the event failure to comply is due to a sudden and unavoidable breakdown of the process or the control equipment, resulted from unavoidable conditions during a startup or shutdown, or resulted from upset of operations. [A.A.C. R18-2-306.A.2, A.A.C. R18-2-331.A.3.e & A.A.C. R18-2-331.B]
[Material Permit Conditions are indicated with underline and italics]

AC1-DC1, AC2-DC1, AC3-DC1, AC4-DC1, CM1-DC1, CM2-DC1, CM3-DC1, CM4-DC1, CM5-DC1, CM6-DC1, CM7-DC1, CM7-DC2, D2-1-DC1, D3-1-DC1, D3-1-DC3, BL-DC1, BL-DC2, BL-DC3, BL-DC4, BL-DC5, BL-DC6, BL-DC7, BL-SB5-DC1, BL-SB5-DC2, BL-SB5-DC3, C2-DC2, C2-DC3, C2-DC4, C2-DC5, C2-DC6, C2-DC7, C2-DC8, C2-DC9, C2-DC10, C2-DC11, C2-DC12, C2-DC13, CM-MA-DC1, AC-DC1, AC-DC3, CM-DC4, CM-DC5, CM-DC8, CM-DC9, CM-DC10, CM-DC11, CM-DC12, CM-DC14, CM-DC15, CM-DC16, CM-DC17, D2-DC1, D2-DC3, D2-DC4, D4-DC1, D4-DC2, F2-PS-DC1, F2-PS-DC2, F2-PS-DC3, F3-KS-DC1, F2-DC1, F2-DC4, F3-DC1, F3-DC2, H4-K1-DC, H4-K2-DC, H4-K3-DC, H2-KB1-DC, H2-KB3-DC, H2-DC1, H2-DC2, H2-DC3, H4-DC1, H5-DC1, H5-5-DC1, H5-5-DC2, PH-DC1, PH-DC2, PH-DC3, PH-DC4, PH-DC5, AC-BE2-DC, D3-1-DC2, D2-PC, CM7-DC3

3. Monitoring, Reporting, Recordkeeping Requirements

a. Raw Mills and Finish Mills

The Permittee shall monitor opacity of emissions from the raw mills and finish mills by conducting daily visual emissions observations of the mill sweep and air separator particulate matter control devices of these affected sources, in accordance with the procedures of EPA Reference Method 22 of 40 CFR 60, Appendix A. The EPA Reference Method 22 test shall be conducted while the affected source is operating at the representative performance conditions. The duration of the EPA Reference Method 22 test shall be six minutes. If visible emissions are observed during any EPA Reference Method 22 visible emissions test, The Permittee shall:

(1) Initiate, within one-hour, the corrective actions specified in the site-specific OMP developed in accordance with Condition II.A.3 of this Attachment.

(2) Within 24 hours of the end of the EPA Reference Method 22 test in which visible emissions were observed, conduct a follow-up Method 22 test of each stack from which visible emissions were observed during the previous Method 22 test. If visible emissions are observed during the follow-up Method 22 test from any stack from which visible emissions were observed during the previous Method 22 test, conduct a visual opacity test of each stack from which emissions were observed during the follow-up Method 22 test in accordance with Method 9 of Appendix A to 40 CFR Part 60. The duration of the Method 9 test shall be 30 minutes.
[A.A.C. R18-2-1101.B.50, 40 CFR §63.1350(e)]

b. For each Bagging System, Bulk Loading System, Bulk Unloading System, Storage Bin, and Transfer Point under this Section, the Permittee shall conduct a monthly monitoring of visible emissions observations in accordance with Condition II.A.5 of this Attachment. [A.A.C. R18-2-1101.B.50, 40 CFR §63.1350(a)(4)]

c. The Permittee shall keep records of rolling 12-month total of limestone added in the D3 mill. [A.A.C. R18-2-306.A.3.c]

d. Compliance Assurance Monitoring (CAM)

The following dust collectors shall be subject to CAM requirements:

AC-DC1, BL-DC1, BL-DC2, BL-DC3, BL-DC4, BL-DC6, BL-DC7, BL-SB5-DC1, BL-SB5-DC2, BL-SB5-DC3, AC-BE2-DC, F2-PS-DC1, F2-PS-DC2, F2-PS-DC3, F3-KS-DC1, CM-DC8, CM-DC9, CM-DC10, CM-DC11, CM-DC12, CM-DC14, CM-DC15, CM-DC16 and CM-DC17.

.

(1) Indicators: Visible emissions. [40 CFR 64.3(a)(1)]

(2) Monitoring Approach:

(a) Visible emissions from each baghouse shall be monitored once daily using EPA Reference Method 22.

(b) Bags, seals, and baghouse compartments shall be inspected annually for each baghouse. [40 CFR 64.3(b)(4)(iii)]

(3) Indicator Range/Threshold: No visible emissions. [40 CFR 64.3(a)(2) & (3)]

(4) Excursions Determinations:

The following shall constitute an excursion event:

(a) Any opacity observed during the visible emission survey constitutes an excursion event.

(b) Any bags or seals in poor condition, or accumulation of dust in the baghouse compartment during annual inspection. [40 CFR 64.6(c)(2)]

(5) Except for, as applicable, monitoring malfunctions, associated repairs, and required quality assurance or control activities (including, as applicable, calibration checks and required zero and span adjustments), the Permittee shall conduct all monitoring in continuous operation (or shall collect data at all required intervals) at all times that the emission points are operating. Data recorded during monitoring malfunctions, associated repairs, and required quality assurance or control activities shall not be used for purposes of this part, including data averages and calculations, or fulfilling a minimum data availability requirement, if applicable. The Permittee shall use all the data collected during all other periods in assessing the operation of the control device and associated control system. A monitoring malfunction is any sudden, infrequent, not reasonably preventable failure of the monitoring to provide valid data.

Monitoring failures that are caused in part by poor maintenance or careless operation are not malfunctions.
[40 CFR 64.6(c)(3), 64.9(c)]

(6) Response to excursions

(a) Upon detecting an excursion or exceedance, the Permittee shall restore operation of the emission point (including the control device and associated capture system) to its normal or usual manner of operation as expeditiously as practicable in accordance with good air pollution control practices for minimizing emissions. The response shall include minimizing the period of any startup, shutdown, or malfunction, and taking any necessary corrective actions to restore normal operation and prevent the likely recurrence of the cause of an excursion or exceedance (other than those caused by excused startup or shutdown conditions). Such actions may include initial inspection and evaluation, recording that operations returned to normal without operator action, or any necessary follow-up actions to return operations to within the indicator range, designated condition, or below applicable emission limitation or standard, as applicable.
[40 CFR 64.7.(d)(1)]

(b) Determination of whether the Permittee has used acceptable procedures in response to an excursion or exceedance will be based on information available, which may include but is not limited to, monitoring results, review of operation, and maintenance procedures and records, and inspection of the control device, associated capture system, and process.
[40 CFR 64.7.(d)(2)]

(7) After approval of monitoring under this part, if the Permittee identifies a failure to achieve compliance with an emission limitation or standard for which the approved monitoring did not provide an indication of an excursion or exceedance while providing valid data, or the results of compliance or performance testing document a need to modify the existing indicator ranges or designated conditions, the Permittee shall promptly notify the Department, and if necessary, submit a proposed modification to this permit to address the necessary monitoring changes. Such a modification may include, but is not limited to, re-establishing indicator ranges or designated conditions, modifying the frequency of conducting monitoring and collecting data, or the monitoring of additional parameters. [40 CFR 64.7(e)]

(8) Excursions shall be reported as required by Condition VII.A.4 of Attachment "A" of this permit. The report shall include, at a minimum, the following: [A.A.C. R18-2-309(2)(c)(iii)]

a. Summary information on the number, duration and cause (including unknown cause, if applicable) of excursion or exceedances, as applicable, and the corrective actions taken; and
[40 CFR 64.9(a) (2)(i)]

b. Summary information on the number, duration and cause

(including unknown cause, if applicable) for monitoring downtime incidents (other than downtime associated with zero and span or other daily calibration checks, if applicable).

[40 CFR 64.9(a)(2)(ii)]

4. Performance Testing Requirements

a. Test Methods for Opacity of Visible Emissions

(1) The Permittee shall demonstrate compliance with Conditions VI.B.1.c and VI.B.1.d of this Attachment by conducting tests once every five years in accordance with Method 9 of Appendix A to 40 CFR Part 60.

[A.A.C. R18-2-1101.B.50, 40 CFR §63.1349(b)(2)]

(2) Each performance test shall be conducted under the conditions that exist when the affected source is operating at the representative performance conditions in accordance with 40 CFR § 63.7(e).

[A.A.C. R18-2-1101.B.50, 40 CFR §63.1349(b)(2)]

(3) The maximum 6-minute average opacity exhibited during the test period shall be used to determine whether the affected source is in initial compliance with the opacity standard.

[A.A.C. R18-2-1101.B.50, 40 CFR §63.1349(b)(2)]

(4) The duration of the Method 9 performance test shall be 3 hours (thirty 6-minute averages), except that the duration of the Method 9 performance test may be reduced to 1 hour if following Conditions are met:

[A.A.C. R18-2-1101.B.50, 40 CFR §63.1349(b)(2)]

(a) There are no individual readings greater than 10 percent opacity;

(b) There are no more than three readings of 10 percent for the first 1-hour period.

b. Test Methods for Particulate Matter Emissions

To demonstrate compliance with Condition VI.B.1.b, the Permittee shall conduct performance test once during the permit term on dust collectors H2-DC2, C2-DC3, D4-DC2, D4-DC1, F2-DC4, AC-DC1, CM-DC17, D2-DC4 in accordance with EPA Reference Method 5 of 40 CFR 60, Appendix A.

[A.A.C. R18-2-312.A, A.A.C. R18-2-306.A.3.c]

5. Permit Shield

Compliance with this Section shall be deemed compliance with 40 CFR §63.1347, 40 CFR §63.1348, 40 CFR §63.1349(b)(2), 40 CFR §63.1350(a)(4) and 40 CFR §63.1350(e).

[A.A.C. R18-2-325]

VII. SECONDARY MATERIALS UTILIZATION PROCEDURES

A. Fuels

1. The Permittee shall only burn the following fuels in Kilns 1, 2, 3, and Kiln 4 in-line kiln/raw mill: [Significant Permit Revision No. 1000547 Condition VII]

Fuel Type	Maximum Fuel Proportion [1]	
	Kilns 1, 2, 3	**Kiln 4**
Coal	100	100
Coke	40	12
Natural Gas	100	100
Diesel	100	100
No. 2 Fuel Oil	100	100
Bunker C Oil	100	100
Chopped Tires (< 6" x 6")	0	34
On-Specification Used Oil Fuel	0	41
Wood Chips	0	22
Jet Fuel	0	5

Notes -1: Maximum Fuel Proportion is defined as the maximum percent of the actual heat input provided by a fuel component in a fuel mixture.

2. This permit does not authorize the use of any other fuels (i.e., any fuels other than those listed in above, including, but not limited to, off-specification used oil fuel, hazardous waste or hazardous waste fuel without prior approval by ADEQ. [Significant Permit Revision No. 1000547 Condition VII]

3. The Permittee may conduct short-term performance testing to evaluate emissions from fuel with percentages greater than those allowed above only after the Director's approval of a detailed test plan that identifies the test duration, pollutants to be measured and the test methods. [A.A.C. R18-2-306.A.2]

4. The Permittee shall apply for a significant permit revision in accordance with A.A.C. R18-2-320 to use a fuel that is not listed in VII.A.1 above or to use a fuel percentage that is greater than listed in VII.A.1 above. The Permittee may be required to conduct performance testing to test the new fuel or the increased fuel percentage. Required performance tests may include, but not be limited to, any of the following: [Permit No. M191365P1-99 Condition IV, A.A.C. R18-2-319.A.6]

Parameter/Pollutant	EPA Reference Method
Traverse Points	1
Velocity	2
Molecular Weight	3
Moisture Content	4

Parameter/Pollutant	EPA Reference Method
Total PM (Particulate Matter)	5
SO_2	6C
NO_x	7E
Sulfuric Acid Mist	8
CO - NDIR	10
H_2S Content of Fuel	11
Total Fluoride (Specific Ion Electrode)	13B
Total Reduced Sulfur (TRS)	15A/16A
Dioxin and Furan, Polynuclear Aromatic Hydrocarbons, and Polychlorinated Biphenyls	23
VOC	25 or 18/25A
Metals	29
PM_{10} (in-stack)	201A
Condensible Particulate Matter	202
Chromium	306
Formaldehyde	316 or 320
HCl	321

5. Fuels Analysis

This Part is not based on a federal applicable requirement and is therefore not federally enforceable. [A.A.C. R18-2-306.B.2, Significant Permit Revision No. 1000547 Condition IX]

a. All records of analyses provided by the fuel supplier concerning the higher heating value, sulfur content and hazardous air pollutants (HAPs) in the fuel shall be maintained on-site and available for review by the Department.

b. In the event the fuel supplier does not provide the analyses specified in Condition VII.A.5.a above, the Permittee shall test or cause to be tested for higher heating value, sulfur content and HAPs (as defined in Clean Air Act § 112(b)(1)) the first fuel delivery of coal, coke, diesel fuel, No. 2 Fuel Oil, Bunker C oil, or on-specification used oil fuel from each fuel supplier or mine location or oil refinery, the first delivery of wood chips from each supplier, and every month for shredded tires when shredded tires are used as fuel. The Permittee shall test these fuels as follows:

(1) Unless otherwise specified, all sample collection, sample preparation, and analyses performed or caused to be performed by the Permittee shall be conducted according to the current ASTM Standards or EPA Testing Methods.

(2) Prior to testing for HAPs, the Permittee shall submit to the Department in writing a list of the specific HAPs (in addition to those specified below in Condition VII.A.5.c(2) for which the concentrations are to be determined. The list should be based on an estimate of the potential for the HAP being present in the individual fuel to be tested in sufficient quantity to lead to a significant air quality impact as described in A.A.C. R18-2-1708.C, Table 3.

(3) The heating value and the sulfur content shall be calculated based on

vendor testing.

c. In the event the fuel supplier does not provide the analyses specified in Condition VII.A.5.a above for on-specification used oil fuel, the Permittee shall cause to be tested such used oil fuel as follows:

(1) Used oil fuel shall be field tested for total halogens, measured as chlorides, at a minimum, before it is unloaded into an on-site storage tank; the screening method used shall be Test Methods for Evaluating Solid Waste, Physical/Chemical Methods, SW-486, 3rd Edition, Method 9077 or a comparable method approved by the department in writing prior to its use; those shipments that do not meet the appropriate used oil fuel specifications listed in ARS § 49-801(B) shall be rejected.

(2) The following HAPs concentrations shall be measured for each on-site tank of fuel before it is used: Arsenic, Cadmium, Chromium, Lead, Polychlorinated Biphenyls (PCBs) and total halogens; those fuels that do not meet the appropriate used oil fuel specifications listed in ARS § 49-801(A) (5) and ARS § 49-801(B) shall not be fired in any kiln.

B. Secondary Materials (Raw Feed Materials) Utilization Procedures

This Part is not based on a federal applicable requirement and is therefore not federally enforceable. The Permittee shall comply with the following:

[A.A.C. R18-2-306.B.2, Significant Permit Revision No. 1000547 Condition IX]

1. "Secondary materials" are materials generated by a party other than the Permittee that are to be reprocessed or reused and which are rich in oxides of calcium, alumina, iron or silica. This definition does not include earthen ores mined exclusively for their oxide content where no extraction or beneficiation other than mining, crushing, screening, physical separation, or washing with water have occurred.

2. Pre-Acceptance Procedures: The Permittee shall require a completed and signed Alternate Raw Material Recycling Questionnaire with analyses and a representative sample of the secondary material from the generator. The Permittee shall re-analyze the sample for any analyses not performed by the generator, and evaluate the secondary material to determine whether the physical characteristics sufficiently compare with the generator description and the MSDS supplied by the generator and to determine, based upon the information supplied by the generator or developed independently by the Permittee, if the secondary material is regulated as a hazardous waste under the Resource Conservation and Recovery Act and the Arizona Hazardous Waste Management Act (hereinafter collectively "RCRA"). If the secondary material is determined to be a hazardous waste regulated under RCRA, the Permittee shall not use the secondary material.

3. Acceptance Procedures: Before secondary materials can be accepted at the facility, the secondary material must be weighed unless accompanied by a certified weighmaster's ticket; the ticket must have the generator's name and an accurate material description. During unloading, the secondary material will be compared to the MSDS and the Recycling Questionnaire and unloading will be suspended until any inaccuracies have been resolved. The Permittee will also obtain a representative sample of the secondary material being unloaded.

4. All records concerning the Permittee's evaluation of secondary materials shall be

maintained on-site and available for review by the Department.

VIII. AUXILIARY ENGINES

A. Applicability

This Section applies to the auxiliary engines listed in the equipment list in Attachment "E" of this permit.

B. Operational Limitations

1. Hourly Limitations

The Permittee shall not operate the engines for more than 500 hours per year, based on a 12-month rolling total.

[A.A.C. R18-2-306.01 and A.A.C. R18-2-331.A.3.a]
[Material Permit Condition is indicated by underline and italics]

2. Fuel Limitation

The Permittee shall burn only natural gas in the engines. [A.A.C. R18-2-306.A.3.c]

3. Monitoring and Record keeping Requirements

The Permittee shall keep records of monthly totals of the hours of operation of the engines. At the end of each month, the Permittee shall calculate and record a rolling 12-month total of the hours of operation. These records shall be made available to ADEQ upon request.
[A.A.C. R18-2-306.A.3.c]

C. Particulate Matter and Opacity

1. Emissions Limitations and Standards

a. The Permittee shall not cause, allow or permit the emission of particulate matter, caused by combustion of fuel, from the generators into the atmosphere in excess of the amounts calculated by the following equation:

$$E = 1.02\ Q^{0.769}$$

Where

E = the maximum allowable particulate emission rate in pounds-mass per hour.

Q = the heat input in million Btu per hour.
[A.A.C. R18-2-719.C.1]

b. Opacity

The Permittee shall not cause, allow or permit to be emitted into the atmosphere from the generators smoke for any period greater than 10 consecutive seconds which exceeds 40% opacity. Visible emissions when starting cold equipment shall be exempt from this requirement for the first 10 minutes. [A.A.C. R18-2-719.E]

2. Monitoring, Reporting, and Recordkeeping Requirements

a. The Permittee shall keep records of fuel supplier certifications to demonstrate compliance. The certification shall contain information regarding the name of fuel supplier and lower heating value of the fuel. These records shall be made available to ADEQ upon request. [A.A.C. R18-2-306.A.3.c and -719.I]

b. The Permittee shall report all 6-minute periods during which the visible emissions exceed 40 percent opacity, as required under Section XII of Attachment "A". [A.A.C. R18-2-306.A.3.c]

D. Permit Shield

Compliance with this Section shall be deemed compliance with A.A.C. R18-2-719.C.1, and A.A.C. R18-2-719.E. [A.A.C. R18-2-325]

IX. ALTERNATE RAW MATERIAL SCREENING ASSESSMENT FOR DIOXINS, FURANS AND PRECURSORS

The Permittee shall comply with the following Alternate Raw Materials Screening Assessment for new alternate raw materials. [A.A.C. R18-2-306.A.2, Condition I.P of Attachment "B" Minor Revision #43448]

A. General

1. This document outlines a screening assessment designed to ensure that new alternate raw materials CalPortland Company considers for use at its Rillito cement plant do not contribute to dioxin and furan (D/F) emissions that might exceed the emission standard as identified in 40 CFR §63.1343(b)(3). In effect, the screening assessment provides a means to assist in determining whether a new alternate raw material might be a change in operations that may adversely affect compliance with the applicable emission standard.

2. If the results of the screening assessment are below the screening levels identified in the attached table, the Permittee is free to use the material without conducting performance tests or further assessments. If any of the results are above the applicable screening levels, the Permittee would be required to conduct and pass a performance test in accord with 40 CFR §63.1349(e) if it intends to use the alternate raw material.

3. Nothing in this screening assessment shall be construed to (1) limit ADEQ's authority to request a performance test under specific permit terms of this Permit, or any other specifically applicable requirements; or (2) provide an independent basis to request a performance test.

B. Screening Assessment Procedure

1. Applicability

a. This screening assessment will be performed for any "new" "alternate raw material".

"New" means an alternate raw material that has not been in use during a previously conducted performance test within the immediately preceding five years. Once the Permittee conducts an initial screening assessment or performance test with the alternate raw material, subsequent shipments of that alternate raw material would not require additional analysis unless the supplier informed the

Permittee of a change in the supplier's process that might affect the concentration of the compounds listed in the attached table.

"Alternate raw material" is defined as a material generated by a party other than Rillito cement plant that is to be reprocessed or reused and which is rich in oxides of calcium, alumina, iron or silica. This definition does not include earthen ores where no extraction or beneficiation other than mining, crushing, screening, physical separation, or washing with water have occurred. This definition is equivalent to the definition of "Secondary material", defined in Permit M190310P1-00, Attachment B, Condition X.D.1, and used interchangeably therein with "alternate raw material".

b. Use of the screening assessment will not be required for earthen ores where no extraction or beneficiation other than mining, crushing, screening, physical separation, or washing with water have occurred.

c. If the Permittee wishes to use the material, the Permittee will provide to ADEQ for review the results of the screening assessment. The Permittee may use the material 30 calendar days after ADEQ receives the screening assessment unless, within that 30-day period, the Permittee receives written notice from ADEQ of its objection to the use of the material. ADEQ's written notice shall be deemed a final, appealable agency action as defined in A.R.S. §41-1092(3).

d. Sampling will be performed on each new alternate raw material prior to its first use if it is fed with normal raw materials into the kiln. Materials fed directly into a hot zone in the kiln, such as the feed shelf between the kiln and calciner, will not require analysis because temperatures in these zones will instantaneously destroy any compounds listed in the table.

e. In addition, suppliers of all alternate raw materials being utilized at the facility will be required by contract to notify the Permittee, prior to shipment, of any change in their process that might affect the concentration of the compounds listed in the attached table. If a supplier so notifies the Permittee, the Permittee will perform the screening assessment on the alternate raw material that is the subject of the notification regardless of whether a previous screening assessment or performance test has been conducted on that alternate raw material. The Permittee will then follow the procedures set forth herein for using new alternate raw materials.

2. Selected Compounds

The compounds listed in the table were selected from 40 CFR Part 261, Appendix VIII, as compounds that could create an environment where a cement kiln could emit increased dioxin and furans (>0.20 toxicity equivalent (TEQ) ng/dscm @ 7% O_2, over 204°C) even if the air pollution control equipment is operated below pre-established temperature limits. Because the primary formation mechanism for dioxin and furan emissions is controlled by controlling the air pollution control device inlet temperature, only the identified compounds could be expected to cause increased dioxin and furan emissions under other conditions.

3. Screening Levels

The screening levels in the table are conservative. The single level set on tetra through octa chlorinated Polychlorinated dibenzo-p-dioxins (PCDD)/ Polychlorinated dibenzo furans (PCDFs) represents a conservative calculation that assumes none of the dioxins are destroyed but may be reformed. In fact, the screening level is lower than the level of

dioxins and furans found in typical urban soils.

A number of conservative factors were used to develop the screening level including:

- A conservative TEQ versus total PDCC/PCDF ratio,
- The assumption that 10% of the raw feed is the alternate raw material,
- The assumption that all PCDD/PCDFs entering the system exit the stack (data from the facility indicated a significant portion is actually destroyed)
- The assumptions that background PCDD/PCDF emissions are up to half the maximum achievable control technology (MACT) emission limit.

Similarly, the screening level for Polychlorinated Biphenyls (PCBs) is well below the 50 ppm PCB limit established under Toxic Substances Control Act (TSCA). It is based on the experience of a cement kiln in Canada that accidentally used metal casting sand contaminated with PCBs. The screening level for the chlorinated phenols is based on the potential for these chlorinated phenols to contain up to 1 ppm dioxins and furans as well as their potential to form small amounts of dioxins and furans during thermal decomposition.

4. Test Methods

Test methods listed for each compound are the most current EPA SW-846 methods. Older or alternative methods that can be demonstrated to provide quantitation at the recommended limit may also be used. All of the compounds identified can be detected at or below the screening levels using the recommended analytical methods. Screening levels are considered site specific for the Permittee. The Permittee may raise one or more of the screening levels in the future based on the results of further testing, upon review and approval by ADEQ.

5. Procedure if Results are Above Screening Levels

If sampling demonstrates that a new alternate raw material is above the screening levels shown in the attached table and the Permittee intends to use the material, it must conduct a performance test in accordance with the requirements of 40 CFR §63.1349(e). The Permittee will provide prior notice of the test in accordance with 40 CFR §63.1349(e). Following the test, the Permittee will not use the new alternate raw material until it submits a notification of compliance status demonstrating that the performance was successful. If the performance test results are greater than the applicable emission standards, the Permittee will not use the new alternate raw material in its process.

Compound Screening Levels

Compound (or compound class)	Analytical Method*	Screening Level*** (mg/kg)
Polychlorinated biphenyls	8082A	1
Heptachlorodibenzo-p-dioxins	8280B/8290A	$6x10^{-5}$**
Heptachlorodibenzofurans	8280B/8290A	$6x10^{-5}$**
Hexachlorodibenzo-p-dioxins	8280B/8290A	$6x10^{-5}$**

Hexachlorodibenzofurans	8280B/8290A	$6x10^{-5}$**
Octachlorodibenzo-p-dioxin	8280B/8290A	$6x10^{-5}$**
Octachlorodibenzofurans	8280B/8290A	$6x10^{-5}$**
Pentachlorodibenzo-p-dioxins	8280B/8290A	$6x10^{-5}$**
Pentachlorodibenzofurans	8280B/8290A	$6x10^{-5}$**
Tetrachlorodibenzo-p-dioxins	8280B/8290A	$6x10^{-5}$**
Tetrachlorodibenzofurans	8280B/8290A	$6x10^{-5}$**
Tetrachlorophenol	8270D	0.1
Pentachlorophenol	8270D	0.1

*From SW-846, Third Edition, January 1998 Revision.
**Limit is total for all TCDDs-OCDDs and TCDF → OCDFs.
***Based on 10% alternative raw material substitution

.

This page was left blank intentionally.

ATTACHMENT "D": SPECIFIC PROVISIONS-THE "KILN 6" OPERATING SCENARIO
AIR QUALITY CONTROL PERMIT NO. 47259
FOR
CALPORTLAND COMPANY- RILLITO CEMENT PLANT

The requirements of this Attachment shall apply, and shall replace specific sections of Attachment "C", as provided in Sections I through VI of this Attachment.

I. DUST CONTROL REQUIREMENTS

The requirements of this Section shall be effective on the date when any of Sections II through VI of this Attachment becomes effective.

A. *The Permittee shall, at all times, operate in conformance with the K6 Dust Control Plan approved by the Director.* [A.A.C. R18-2-306.01, A.A.C. R18-2-331.A.3.a]
[Material Permit Condition is indicated by underline and italics]

B. Dust Control Requirements for Unpaved Roads

The Permittee shall maintain a dust control efficiency of 85 percent or better on all of the following unpaved roads:

1. All active roads at the quarry;

2. The unpaved sections of the road from Avra Valley road to Twin Peaks Road;

3. The unpaved sections of the roads from the Canal to Avra Valley road; and

4. The following active unpaved roads at the cement plant: East Road, West Road, Coal/Coke Storage Area Road, Central Control Road, and Reclaimer Road.

[A.A.C. R18-2-403(A)(1), R18-2-406(A)(4)]

C. The Permittee shall maintain record of the listing of the active unpaved roads along with marked diagrams on site. These records shall be available to ADEQ on request.
[A.A.C. R18-2-306.A.3.c]

D. Additional Requirements for Certain Nonpoint Dust Sources

1. The Permittee shall not cause, allow, or permit bulk material to be hauled off-site, except in accordance with Conditions I.D.1.a and I.D.1.b below. This condition shall not apply to haul truck trips that leave the site only to cross public roads between the quarry and cement plant. [A.A.C. R18-2-406(A)(4)]

   a. All haul trucks shall be loaded in such a manner as to prevent spillage or loss of bulk material from holes or other openings in the cargo compartment's floor, sides, or tailgate(s). [A.A.C. R18-2-406(A)(4)]

   b. No bulk material shall be transported in haul trucks unless the cargo compartment is covered with a tarp or other suitable closure, or unless the cargo compartment is loaded such that the freeboard is not less than three inches. [A.A.C. R18-2-406(A)(4)]

2. The Permittee shall not cause, allow, or permit any empty haul truck to leave the site unless the interior of the cargo compartment has been cleaned or the cargo compartment is covered with a tarp or other suitable closure. This condition shall

not apply to haul truck trips that leave the site only to cross public roads between the quarry and cement plant. [A.A.C. R18-2-406(A)(4)]

3. The Permittee shall not cause, allow, or permit any haul truck to leave the site without first utilizing a device that removes from its tires and exterior surfaces mud, dirt, debris, or other accumulation that may cause particulate matter emissions. This condition shall not apply to haul truck trips that leave the site only to cross public roads between the quarry and cement plant. Acceptable devices include:

   a. Wheel wash system.

   b. Gravel pad at least 30 feet wide, 50 feet long, and 6 inches deep.

   c. Paved roadway at least 20 feet wide and 100 feet long.

   d. Rails, pipes, or grates of sufficient width and length to remove debris effectively.

[A.A.C. R18-2-406(A)(4)]

4. The Permittee shall at all times maintain and operate gates to preclude public vehicle traffic from traveling on the unpaved road from the plant to the quarry, between Avra Valley Road and Twin Peaks Road, described in the December 2005 Class I permit application as road segments 50-51 and 51-52.

[A.A.C. R18-2-404(A)]

II. QUARRY, LIMESTONE PROCESSING PLANT, AND OTHER MATERIAL HANDLING ACTIVITIES

The requirements of this Section shall apply and shall replace Section III of Attachment "C" beginning on the date when any of Sections III through VI of Attachment "D" becomes effective.

A. List of Emission Units

Emission Unit/Affected Source Name	Emission Unit/ Affected Source Description (Nominal Capacity)	Control Measure (Control Device ID Number)	Emission Point ID Number
Wet Drilling	Drilling of limestone	n/a	n/a
Limestone Blasting	Blasting with bulk blasting agent or explosive	n/a	n/a
Discharge of B2-PF1 to B2-VG1	Transfer Point, 1200 tons per hour	Dust Collector (B2-DC1)	B2-DC1
Discharge of B2-VG1 to B2-BF1	Transfer Point, 1200 tons per hour	Dust Collector (B2-DC1)	B2-DC1
Impact Crusher B2-IC1	Impact Crusher, 1200 tons per hour	Dust Collector (B2-DC1)	B2-DC1
Discharge of B2-IC1 to B2-BF1	Transfer Point, 1200 tons per hour	Dust Collector (B2-DC1)	B2-DC1
Discharge of B3-BC2 to B2-IC1	Transfer Point, 1200 tons per hour	Dust Collector (B2-DC1)	B2-DC1
Discharge of B2-BF1 to B2-BC1	Transfer Point, 1200 tons per hour	Dust Collector (B2-DC1)	B2-DC1
Discharge of B2-DC1 to B2-BC1	Transfer Point	Dust Collector (B2-DC1)	B2-DC1

Emission Unit/Affected Source Name	Emission Unit/ Affected Source Description (Nominal Capacity)	Control Measure (Control Device ID Number)	Emission Point ID Number
Discharge of B2-BC1 to B3-VS1	Transfer Point, 1200 tons per hour	Dust Collector (B3-DC1)	B3-DC1
Discharge of B3-VS1 to B3-BC1	Transfer Point, 1200 tons per hour	Dust Collector (B3-DC1)	B3-DC1
Discharge of B3-BC1 to B3-BC2	Transfer Point, 1200 tons per hour	Dust Collector (B3-DC1)	B3-DC1
Discharge of B3-VS1 to B3-BC3	Transfer Point, 1200 tons per hour	Dust Collector (B3-DC1)	B3-DC1
Discharge of B3-DC1 to B3-BC3	Transfer Point	Dust Collector (B3-DC1)	B3-DC1
Surge Storage Building B-4	Storage Building	n/a	n/a
Discharge of B5-BC1 to B5-BC2	Transfer Point, 1200 tons per hour	Dust Collector (B5-DC1)	B5-DC1
Discharge of B5-DC1 to B5-BC2	Transfer Point	Dust Collector (B5-DC1)	B5-DC1
Discharge of B5-BC2 to B5-BC3	Transfer Point, 1200 tons per hour	Dust Collector (B5-DC2)	B5-DC2
Discharge of B5-DC2 to B5-BC3	Transfer Point	Dust Collector (B5-DC2)	B5-DC2
Discharge of B5-BC3 to B5-BC4	Transfer Point, 1200 tons per hour	Dust Collector (B5-DC3)	B5-DC3
Discharge of B5-DC3 to B5-BC4	Transfer Point	Dust Collector (B5-DC3)	B5-DC3
Discharge of B5-BC4 to B7-BC1	Transfer Point, 1200 tons per hour	Dust Collector (B7-DC1)	B7-DC1
Discharge of B7-DC1 to B7-BC1	Transfer Point	Dust Collector (B7-DC1)	B7-DC1
Stacker/Reclaimer Building	Storage Building	n/a	n/a
Discharge of B5-BC4 to B8-BC1	Transfer Point, 450 tons per hour	Dust Collector (B8-DC1)	B8-DC1
Discharge of B8-DC1 to B8-BC1	Transfer Point	Dust Collector (B8-DC1)	B8-DC1
Discharge of B8-BC1 to B8-BC1A	Transfer Point, 450 tons per hour	Dust Collector (B8-DC2)	B8-DC2
Rail Unloading to B9-PF1	Bulk Unloading System	Water Spray	n/a
Transfer from Loader to B9-PF1	Transfer Point	Water Spray	n/a
Discharge of B9-PF1 to B9-BC1	Transfer Point, 500 tons per hour	Dust Collector (B9-DC1)	B9-DC1
Discharge of B9-DC1 to B9-BC1	Transfer Point	Dust Collector (B9-DC1)	B9-DC1
Impact Crusher B9-IC	Impact Crusher, 500 tons per hour	n/a	n/a
Discharge from B9-IC to Trucks	Transfer Point	n/a	n/a
Discharge of B9-BC1 to B9-VS1	Transfer Point, 500 tons per hour	Dust Collector (B9-DC2)	B9-DC2

Emission Unit/Affected Source Name	Emission Unit/ Affected Source Description (Nominal Capacity)	Control Measure (Control Device ID Number)	Emission Point ID Number
Discharge of B9-VS1 to B9-BC5	Transfer Point, 500 tons per hour	Dust Collector (B9-DC2)	B9-DC2
Discharge of B9-DC2 to B9-BC5	Transfer Point	Dust Collector (B9-DC2)	B9-DC2
Discharge of B9-BC3 to B9-BC2	Transfer Point, 500 tons per hour	Dust Collector (B9-DC2)	B9-DC2
Discharge of B8-DC2 to C2-BC4	Transfer Point	Dust Collector (B9-DC3)	B9-DC3
Discharge of B8-BC1A to B9-BC4	Transfer Point, 500 tons per hour	Dust Collector (B9-DC3)	B9-DC3
Discharge of B9-DC3 to B9-BC4	Transfer Point	Dust Collector (B9-DC3)	B9-DC3
Discharge of B9-BC2 to B9-BC4	Transfer Point, 500 tons per hour	Dust Collector (B9-DC3)	B9-DC3
Discharge of B9-BC5 to B9-BC4	Transfer Point, 500 tons per hour	Dust Collector (B9-DC3)	B9-DC3
Discharge of B9-BC2 to B9-BC3	Transfer Point, 500 tons per hour	Dust Collector (B9-DC3)	B9-DC3
Discharge of B9-BC1 to B9-BC4	Transfer Point, 500 tons per hour	Dust Collector (B9-DC3)	B9-DC3
Discharge of B9-IC to B9-BC2	Transfer Point, 500 tons per hour	Dust Collector (B9-DC5)	B9-DC5
Discharge of B9-BC4-BF to B9-BC4	Transfer Point, 500 tons per hour	n/a	n/a
Discharge of C2-BC3 to C2-BC4	Transfer Point, 500 tons per hour	Dust Collector (C2-DC1)	C2-DC1
Discharge of C2-DC1 to C2-BC4	Transfer Point	Dust Collector (C2-DC1)	C2-DC1
Discharge of C2-BC3 to C2-BC7	Transfer Point, 525 tons per hour	Dust Collector (C2-DC1)	C2-DC1

B. Emission Limits/Standards

1. Operational Limitations

a. *The Permittee shall not cause or allow blasting in the quarry to exceed 157 blasts per 365-day period.* [A.A.C. R18-2-306.01, A.A.C. R18-2-331.A.3.a]
[Material Permit Condition is indicated by underline and italics]

b. *The Permittee shall not cause or allow bulk blasting agent or explosive usage in the quarry to exceed 2,211 tons per 365-day period.*
[A.A.C. R18-2-306.01, A.A.C. R18-2-331.A.3.a]
[Material Permit Condition is indicated by underline and italics]

c. *The Permittee shall not cause or allow the amount of limestone quarried and processed to exceed 8,000,000 tons per 365-day period.*
[A.A.C. R18-2-306.01, A.A.C. R18-2-331.A.3.a]
[Material Permit Condition is indicated by underline and italics]

2. Particulate Matter Emission Standards

a. The Permittee shall not cause or allow to be emitted into the atmosphere from any Dust Collector listed in Condition II.A any gases which contain particulate matter (PM) in excess of 0.005 gr/dscf, based on an average of three test runs of a minimum one hour duration each.

[A.A.C. R18-2-403(A)(1), R18-2-406(A)(4)]

b. The Permittee shall not cause or allow to be emitted into the atmosphere from any Dust Collector any gases which contain PM_{10} in excess of the following emission rates, based on an average of three test runs of a minimum one hour duration each. [A.A.C. R18-2-306.02, R18-2-406(A)(5)]

Emission Point ID Number	PM_{10} Emission Limit (lbs/hr)
B2-DC1	0.81
B3-DC1	0.53
B5-DC1	0.11
B5-DC2	0.05
B5-DC3	0.08
B7-DC1	0.18
B8-DC1	0.08
B8-DC2	0.15
B9-DC1	0.16
B9-DC2	0.74
B9-DC3	0.39
B9-DC5	0.12
C2-DC1	0.08

c. The Permittee shall not cause, allow or permit the discharge of particulate matter into the atmosphere, except as fugitive emissions, in any one hour from any Emission Unit listed in Condition II.A in total quantities in excess of the amounts calculated by one of the following equations:

(1) For process sources having a process weight rate of 60,000 pounds per hour (30 tons per hour) or less, the maximum allowable particulate emissions shall be determined by the following equation:

$$E = 3.59 \times P^{0.62}$$

Where:

E = the maximum allowable emissions rate in pounds per hour.

P = the process weight rate in tons per hour.

[SIP Rule 9-3-522(A)(2)(a)]

(2) For process sources having a process weight rate greater than 60,000 pounds per hour (30 tons per hour), the maximum allowable emissions shall be determined by the following equation:

$$E = 17.31 \times P^{0.16}$$

Where "E" and "P" are defined as in Condition II.B.2.c(1).

[SIP Rule 9-3-522(A)(2)(b)]

d. The Permittee shall not cause to be discharged into the atmosphere from any emission unit listed in Condition II.A any emissions which exhibit greater than 20 percent opacity. [A.A.C. R18-2-702(B)(1)]

e. Spray bar pollution controls shall be utilized in accordance with "EPA Control of Air Emissions From Process Operations in the Rock Crushing Industry" (EPA 340/1-79-002), "Wet Suppression System" (pages 15-34), amended as of January, 1979 (and no future amendments or editions), as incorporated herein by reference and on file with the Office of the Secretary of State, with placement of spray bars and nozzles as required by the control officer to minimize air pollution.

[A.A.C. R18-2-722(D)]

C. Air Pollution Control Requirements

At all times when any emission unit listed in Condition II.A of this Attachment is in operation, including periods of startup, shutdown, and malfunction, the Permittee shall, to the extent practicable install, maintain and *operate the associated Dust Collector or Water Spray in a manner consistent with good air pollution control practice for minimizing particulate matter emissions.* This condition is not material in the event failure to comply is due to a sudden and unavoidable breakdown of the process or the control equipment, resulted from unavoidable conditions during a startup or shutdown, or resulted from upset of operations.

[A.A.C. R18-2-331(A)(3)(d) and (e); R18-2-331(B); R18-2-403(A)(1); and R18-2-406(A)(4)]
[Material Permit Conditions are indicated with underline and italics]

D. Monitoring, Recordkeeping, and Reporting Requirements

1. Monitoring and Recordkeeping for Operational Limitations

a. The Permittee shall maintain daily records of the number of blasts performed in the quarry. [A.A.C. R18-2-306(A)(3)(c)]

b. The Permittee shall maintain daily records of the quantity and type of explosive used. [A.A.C. R18-2-306(A)(3)(c)]

c. The Permittee shall maintain daily records of the amount of limestone quarried. [A.A.C. R18-2-306(A)(3)(c)]

2. Monitoring and Recordkeeping for Particulate Matter Emissions

a. Visible Emissions Observations

(1) The Permittee shall conduct Visible Emissions Observation Procedures of nonpoint sources, and where applicable, fugitive

emissions, at least once each calendar month in accordance with Conditions II.C.2 of Attachment "B". [A.A.C. R18-2-306(A)(3)(c)]

(2) The Permittee shall conduct a monthly visible emissions observation of the exhaust from each dust collector listed in Condition II.A in accordance with EPA Reference Method 22. If visible emissions are observed during the monthly visible emissions observation, the Permittee shall initiate investigation of the dust collector within 24 hours of the occurrence, to identify any need for corrective action. If corrective action is required, the Permittee shall implement such corrective action as soon as practicable in order to avert or minimize possible exceedances of the emission standards in Condition II.B.2 of this Attachment. [A.A.C. R18-2-306(A)(3)(c)]

b. Monitoring and Recordkeeping for Dust Collectors

(1) *The Permittee shall install, calibrate*, maintain, and operate, *according to the manufacturer's specifications, devices for monitoring and recording the pressure drop across each dust collector listed in Condition II.A of this Attachment.* This condition is not material in the event failure to comply is due to a sudden and unavoidable breakdown of the process or the control equipment, resulted from unavoidable conditions during a startup or shutdown, or resulted from upset of operations.

[A.A.C. R18-2-306(A)(3), R18-2-331(A)(3)(c), R18-2-331(B), R18-2-403(A)(1), R18-2-406(A)(4), and R18-2-406(A)(5)]
[Material Permit Conditions are indicated with underline and italics]

(2) The Permittee shall perform monthly inspections of each dust collector listed in Condition II.A of this Attachment, and the associated pressure drop continuous parameter monitoring systems, in accordance with the manufacturers' recommended procedures. The Permittee shall take corrective action following the discovery of any abnormal operation or required maintenance of any dust collector pressure drop continuous parameter monitoring system as expeditiously as practicable in accordance with good air pollution control practices for minimizing emissions, but no later than within 24 hours following detection.

[A.A.C. R18-2-306(A)(3), R18-2-403(A)(1), R18-2-406(A)(4), and R18-2-406(A)(5)]

(3) If a monthly inspection performed pursuant to Condition II.D.2.b(2) above indicates that the pressure drop across any dust collector is outside the range established pursuant to Condition II.E.3 of this Attachment, the Permittee shall initiate investigation of the dust collector within 24 hours of the occurrence, to identify any need for corrective action. If corrective action is required, the Permittee shall implement such corrective action as soon as practicable in order to avert or minimize possible exceedances of the emission standards in Condition II.B.2 of this Attachment.

[A.A.C. R18-2-306(A)(3), R18-2-403(A)(1), R18-2-406(A)(4), and R18-2-406(A)(5)]

c. Monitoring and Recordkeeping for Process Weight Rate

(1) *The Permittee shall install, calibrate*, maintain, and operate *monitoring devices which can be used to determine daily the process weight of crushed stone produced. The weighing devices shall have an accuracy of ± five percent over their operating range.* This condition is not material in the event failure to comply is due to a sudden and unavoidable breakdown of the process or the control equipment, resulted from unavoidable conditions during a startup or shutdown, or resulted from upset of operations.

[A.A.C. R18-2-331(A)(3)(c), R18-2-331(B), and SIP Rule 9-3-522(B)(1)]
[Material Permit Conditions are indicated with underline and italics]

(2) The Permittee shall maintain a record of daily production rates of crushed stone produced. [SIP Rule 9-3-522(B)(2)]

3. Reporting of Performance Test Results

The Permittee shall submit written reports of the results of all performance tests required by Conditions II.E.1 and II.E.2 of this Attachment.

[A.A.C. R18-2-306(A)(5), R18-2-403(A)(1), R18-2-406(A)(4), and R18-2-406(A)(5)]

4. Notification Requirements for Kiln 6 Project

a. On or before the date that Section II of this Attachment becomes effective, the Permittee shall submit written notification of the schedule for shutting down or modifying the emissions units covered by Sections III of Attachment "C". [A.A.C. R18-2-306.01, R18-2-403(A)(2)]

b. The notification required by Condition II.D.4.a of this Attachment shall include an updated PM netting analysis and an updated PM-10 emissions offset analysis for the Kiln 6 project. [A.A.C. R18-2-306.01, R18-2-403(A)(2)]

E. Testing Requirements

The Permittee shall determine initial compliance with Conditions II.B.2.a through II.B.2.c of this Attachment in accordance with Conditions II.E.1 and II.E.2 below.

[A.A.C. R18-2-306(A)(3)(c), R18-2-312, R18-2-403(A)(1), R18-2-406(A)(4), and R18-2-406(A)(5)]

1. For each Dust Collector listed in Condition II.A of this Attachment, initial performance tests shall be performed within 90 days after achieving the maximum production rate at which the affected source will be operated, but not later than 180 days after initial startup of such affected source.

2. Performance tests required by Condition II.E.1 of this Attachment shall be conducted as follows.

a. The Permittee shall use EPA Reference Method 1 in Appendix A to 40 CFR Part 60 for sample and velocity traverses. [SIP Rule 9-3-522(C)(1)]

b. The Permittee shall use EPA Reference Method 2 in Appendix A to 40 CFR Part 60 for velocity and volumetric flow rate. [SIP Rule 9-3-522(C)(1)]

c. The Permittee shall use EPA Reference Method 3 in Appendix A to 40 CFR Part 60 for gas analysis. [SIP Rule 9-3-522(C)(1)]

d. The Permittee shall use EPA Reference Method 4 in Appendix A to 40 CFR Part 60 for determination of moisture content. [SIP Rule 9-3-522(C)(1)]

e. The Permittee shall use any of the following test methods to determine the PM-10 concentration:

(1) EPA Reference Method 5 in Appendix A to 40 CFR Part 60;

(2) EPA Reference Method 201 in Appendix M to 40 CFR Part 51; or

(3) EPA Reference Method 201a in Appendix M to 40 CFR Part 51.

[A.A.C. R18-2-403(A)(1), R-18-406(A)(4), and R-18-406(A)(5)]

f. The Permittee shall use EPA Reference Method 5 in Appendix A to 40 CFR Part 60 for concentration of particulate matter. [SIP Rule 9-3-522(C)(2)]

g. Each performance test shall consist of three separate runs.

[A.A.C. R18-2-403(A)(1), R-18-406(A)(4), and R-18-406(A)(5)]

h. Each run shall be conducted for at least one hour, and the minimum sample volume shall be 30 dscf.

[A.A.C. R18-2-403(A)(1), R-18-406(A)(4), and R-18-406(A)(5); SIP Rule 9-3-522(C)(2)]

i. Sampling shall not be started until 30 minutes after startup and shall be terminated before shutdown procedures commence.

[SIP rule 9-3-522(C)(2), A.A.C. R18-2-403(A)(1), R-18-406(A)(4), and R-18-406(A)(5)]

j. The average of the three runs shall be used to determine compliance.

[SIP rule 9-3-522(C)(2), A.A.C. R18-2-403(A)(1), R-18-406(A)(4), and R-18-406(A)(5)]

3. For each dust collector subject to the requirements of Condition II.D.2.b of this Attachment, during each performance test conducted pursuant to Condition II.E.1 above, the Permittee shall determine a range of pressure drop values for the dust collector using the following procedures:

a. During each performance test run, continuously monitor and record the pressure drop across the dust collector as required under Condition II.D.2.b(1) of this Attachment;

[A.A.C. R18-2-306(A)(3)(c), R18-2-403(A)(1), R18-2-406(A)(4), and R18-2-406(A)(5)]

b. Determine a range of dust collector pressure drop values and associated averaging time, based on the pressure drop data monitored during the performance test. The pressure drop range shall be expressed in units of inches of water column ("in. w.c."). The maximum pressure drop (i.e., the high end of the range) shall be 3.0 in. w.c. greater than the arithmetic average of the pressure drop readings during the performance test. The minimum pressure drop (i.e., the low end of the range) shall be either one-half the arithmetic average of the pressure drop readings during the performance test or 3.0 in. w.c. less than the arithmetic average of the pressure drop readings during the performance test, whichever is greater.

[A.A.C. R18-2-306(A)(3)(c), R18-2-403(A)(1), R18-2-406(A)(4), and R18-2-406(A)(5)]

F. Permit Shield

Compliance with the terms of this Section shall be deemed compliance with the following applicable requirement(s) in effect on the date of permit issuance: A.A.C. R18-2-702 and R18-2-722; SIP Rule 9-3-522. [A.A.C. R18-2-325]

III. COAL PREPARATION PLANT

The requirements of this Section shall apply, and shall replace Section IV of Attachment "C" beginning on the first date when any new or modified emissions unit listed in Condition III.A below becomes operational. Each new and modified unit listed in Condition III.A shall be deemed operational on the first calendar day following installation or modification when its 24-hour average production rate exceeds 90 percent of its nominal capacity, or on the 30th day following initial use for new equipment or modification for modified equipment, whichever is earlier.

A. List of Emission Units

Emission Unit/Affected Source Name	Emission Unit/ Affected Source Description (Nominal Capacity)	Control Measure (Control Device ID Number)	Emission Point ID Number
Rail Unloading of Coal	Bulk Unloading System	Water Spray	n/a
Rail Unloading of Petroleum Coke	Bulk Unloading System	n/a	n/a
Transfer from Loader to R6-VF1	Transfer Point	Water Spray	n/a
Truck Loadout of Coal Mill Rejects	Bulk Loading System	n/a	n/a
Truck Dump to Storage Pile	Bulk Unloading System	n/a	n/a
Discharge from R6-VF1 to R6-BC1A	Transfer Point, 300 tons per hour	n/a	n/a
Discharge from R6-VF2 to R6-BC1A	Transfer Point, 300 tons per hour	n/a	n/a
Discharge from R6-BC1A to R6-BC4	Transfer Point, 300 tons per hour	n/a	n/a
Discharge from R6-BC4 to R6-RDS	Transfer Point, 300 tons per hour	n/a	n/a
Discharge from R6-RDS to Storage Pile	Transfer Point, 300 tons per hour	n/a	n/a
Discharge from R6-BC1A to R6-BC1B	Transfer Point, 300 tons per hour	n/a	n/a
Discharge from R6-BC1B to Trucks	Transfer Point	n/a	n/a
Discharge from R6-BC1B to R6-SB	Transfer Point, 300 tons per hour	n/a	n/a
Discharge from R6-BC2 to R6-RP1	Transfer Point, 50 tons per hour	n/a	n/a
Discharge from R6-RP1 to R6-BC3	Transfer Point, 50 tons per hour	n/a	n/a
Discharge from R6-BC3 to R6-BE1	Transfer Point, 50 tons per hour	n/a	n/a

Emission Unit/Affected Source Name	Emission Unit/ Affected Source Description (Nominal Capacity)	Control Measure (Control Device ID Number)	Emission Point ID Number
Discharge from R6-BE1 to R6-BC5	Transfer Point, 300 tons per hour	n/a	n/a
Discharge from R6-BC5 to R6-BC6	Transfer Point, 300 tons per hour	n/a	n/a
Discharge from R6-BC1B to R6-BC6	Transfer Point, 300 tons per hour	n/a	n/a
Discharge from R6-BC6 to R6-RP2	Transfer Point, 300 tons per hour	n/a	n/a
Discharge from R6-RP2 to H3-SB1	Transfer Point, 300 tons per hour	n/a	n/a
Discharge from R6-BC7 to H3-SB2	Transfer Point, 300 tons per hour	n/a	n/a
Discharge from H3-SB2 to H3-BC2	Transfer Point, 40 tons per hour	n/a	n/a
Discharge from H3-BC2 to H3-BC3	Transfer Point, 40 tons per hour	n/a	n/a
Discharge from H3-BC3-DG to H3-CM1-SCF	Transfer Point, 40 tons per hour	n/a	n/a
Discharge from H3-DC3 to H3-SB4	Transfer Point	Dust Collector (H3-DC3)	H3-DC3
Discharge from H3-DC1-SC to H3-SB3	Transfer Point	Dust Collector (H3-DC2)	H3-DC2
Coal Mill H3-K4-CM	Thermal Dryer, 25 tons per hour	Dual Dust Collector (H3-K4-DC1&2)	H3-K4-DC1&2
Coal Mill H3-CM1	Thermal Dryer, 40 tons per hour	Dust Collector (H3-DC1)	H3-DC1
Discharge of H3-K4-WF1-SB to H3-K4-WF1	Transfer Point	Dual Dust Collector (H3-K4-DC1&2)	H3-K4-DC1&2
Discharge of H3-K4-WF2-SB to H3-K4-WF2	Transfer Point	Dual Dust Collector (H3-K4-DC1&2)	H3-K4-DC1&2

B. Emission Limits and Standards

1. Particulate Matter Emission Standards for Unmodified Existing Sources

The requirements of Conditions III.B.1.a and III.B.1.b of this Attachment shall apply to the following emissions units listed in Condition III.A above: Truck Loadout of Coal Mill Rejects (Bulk Loading System) and Truck Dump to Storage Pile (Bulk Unloading System).

a. Opacity

The Permittee shall not cause or allow to be emitted into the atmosphere from any existing source any gases which exhibit opacity greater than 20 percent, based on a 6-minute block average, as determined by EPA Reference Method 9 in Appendix A to 40 CFR Part 60.

[A.A.C. R18-2-702(B)(1)]

b. The Permittee shall not cause, allow or permit the discharge of particulate matter into the atmosphere, in any one hour from any coal preparation plant in total quantities in excess of the amounts calculated by one of the following equations:

(1) For process sources having a process weight rate of 60,000 pounds per hour (30 tons per hour) or less, the maximum allowable particulate emissions shall be determined by the following equation:

$$E = 3.59 \times P^{0.62}$$

Where:

E = the maximum allowable emissions rate in pounds per hour.

P = the process weight rate in tons per hour.

[SIP Rule 9-3-516(A)(2)(a)]

(2) For process sources having a process weight rate greater than 60,000 pounds per hour (30 tons per hour), the maximum allowable emissions shall be determined by the following equation:

$$E = 17.31 \times P^{0.16}$$

Where "E" and "P" are defined as in Condition III.B.1.b(1) above.

[SIP Rule 9-3-516(A)(2)(b)]

2. Particulate Matter Emission Standards for Modified Existing Sources

The requirements of Conditions III.B.2.a and III.B.2.b of this Attachment shall apply to the following emissions units listed in Condition III.A: Rail Unloading of Coal (Bulk Unloading System); Rail Unloading of Petroleum Coke (Bulk Unloading System); and Discharge from R6-RDS to Storage Pile (Transfer Point).

a. The Permittee shall not cause or allow to be emitted into the atmosphere from any Bulk Loading System or rail unloading operation any gases which exhibit opacity greater than 5 percent, based on a 6-minute block average, as determined by EPA Reference Method 9 in Appendix A to 40 CFR Part 60. [A.A.C. R18-403(A)(1), R18-2-406(A)(4), and R18-2-702(B)(1)}]

b. The Permittee shall not cause, allow or permit the discharge of particulate matter into the atmosphere, in any one hour from any coal preparation plant in total quantities in excess of the amounts calculated by one of the following equations:

(1) For process sources having a process weight rate of 60,000 pounds per hour (30 tons per hour) or less, the maximum allowable particulate emissions shall be determined by the following equation: [SIP Rule 9-3-516(A)(2)(a)]

$$E = 3.59 \times P^{0.62}$$

Where:

E = the maximum allowable emissions rate in pounds per hour.

P = the process weight rate in tons per hour.

(2) For process sources having a process weight rate greater than 60,000 pounds per hour (30 tons per hour), the maximum allowable emissions shall be determined by the following equation: [SIP Rule 9-3-516(A)(2)(b)]

$$E = 17.31 \times P^{0.16}$$

Where "E" and "P" are defined as in Condition III.B.2.b(1) above.

3. Particulate Matter Emission Standards for New Sources

The requirements of Conditions III.B.3.a through III.B.3.d of this Attachment shall apply to all Emissions Units listed in Condition III.A except for bulk loading systems, bulk unloading systems, and the transfer from the R6-RDS to the storage pile.

a. The Permittee shall not cause or allow to be emitted into the atmosphere from any thermal dryer listed in Condition III.A of this Attachment any gases which contain particulate matter (PM) in excess of 0.031 grains per dry standard cubic foot (dscf). [A.A.C. R18-2-901(32) {40 CFR § 60.252(a)(1)}]

b. The Permittee shall not cause or allow to be emitted into the atmosphere from any Dust Collector listed in Condition III.A any gases which contain particulate matter (PM) in excess of 0.005 gr/dscf, based on an average of three test runs of a minimum one hour duration each.

[A.A.C. R18-403(A)(1) and R18-2-406(A)(4)}]

c. Opacity

The Permittee shall not cause or allow to be emitted into the atmosphere from any Conveyor Transfer Point or any Dust Collector listed in Condition III.A of this Attachment any gases which exhibit opacity greater than 20 percent, based on a 6-minute block average.

[A.A.C. R18-2-331(A)(3)(f) and R18-2-901(32) {40 CFR § 60.252(a)(2)}]
[Material Permit Conditions are indicated with underline and italics]

d. The Permittee shall not cause or allow to be emitted into the atmosphere from any Dust Collector gases which contain particulate matter (PM) in excess of the following emission rates, based on an average of three test runs of a minimum one hour duration each.

Emission Point ID Number	PM Emission Limit (lbs/hr)
H3-DC1	1.72
H3-DC2	0.01

Emission Point ID Number	PM Emission Limit (lbs/hr)
H3-DC3	0.01
H3-K4-DC1&2	0.87

[A.A.C. R18-2-306.01 and R18-2-406(A)(5)]

4. The Permittee shall maintain and operate Dust Collector H3-DC1 such that the alarm of the associated Bag Leak Detection System, as required by Condition III.D.2.a of this Attachment, is not activated and alarm condition does not exist for more than 5 percent of the total operating time in a 6-month block period.

[A.A.C. R18-2-406(A)(4) and R18-2-406(A)(5)]

C. Air Pollution Control Requirements

At all times when any emission unit listed in Condition III.A of this Attachment is in operation, including periods of startup, shutdown, and malfunction, the Permittee shall, to the extent practicable, install, maintain and *operate the associated dust collector or water spray in a manner consistent with good air pollution control practice for minimizing particulate matter emissions*. This condition is not material in the event failure to comply is due to a sudden and unavoidable breakdown of the process or the control equipment, resulted from unavoidable conditions during a startup or shutdown, or resulted from upset of operations.

[A.A.C. R18-2-331(A)(3)(d) and (e); R18-2-331(B); and R18-2-406(A)(4)]

[Material Permit Conditions are indicated with underline and italics]

D. Monitoring, Recordkeeping, and Reporting Requirements

1. Operations and Maintenance Plans

a. The Permittee shall prepare written operations and maintenance plans for each Emission Unit listed in Condition III.A. [A.A.C. R18-2-331(A)(3)(c)]

b. Each plan shall include procedures for proper operation and maintenance of the affected source and air pollution control devices in order to meet the emission limits of Condition III.B.1. [A.A.C. R18-2-331(A)(3)(c)]

2. Coal Mills

a. *For Coal Mills H3-K4-CM and H3-CM1, the Permittee shall install, calibrate*, maintain, and continuously operate *a device for monitoring the temperature of the gas stream at the exit of the Coal Mill.* This condition is not material in the event failure to comply is due to a sudden and unavoidable breakdown of the process or the control equipment, resulted from unavoidable conditions during a startup or shutdown, or resulted from upset of operations.

[A.A.C. R18-2-331(A)(3)(c), R18-2-331(B), and R18-2-901(32) {40 CFR § 60.253(a)}]

[Material Permit Conditions are indicated with underline and italics]

(1) The temperature monitoring device is to be certified by the manufacturer to be accurate within ± 3 °F.

[A.A.C. R18-2-901(32) {40 CFR § 60.253(a)}]

(2) *The temperature monitoring device shall be recalibrated annually in accordance with procedures under 40 CFR § 60.13(b).* This condition is not material in the event failure to comply is due to a sudden and unavoidable breakdown of the

process or the control equipment, resulted from unavoidable conditions during a startup or shutdown, or resulted from upset of operations.

[A.A.C. R18-2-331(A)(3)(c), R18-2-331(B), and R18-2-901(32) {40 CFR § 60.253(b)}]
[Material Permit Conditions are indicated with underline and italics]

3. Monitoring and Recordkeeping for Dust Collector H3-DC1

a. *The Permittee shall install, calibrate,* maintain, *and operate a Bag Leak Detection System for detecting leaks in Dust Collector H3-DC1.* This condition is not material in the event failure to comply is due to a sudden and unavoidable breakdown of the process or the control equipment, resulted from unavoidable conditions during a startup or shutdown, or resulted from upset of operations.

[A.A.C. R18-2-306(A)(3)(c) and (d), R18-2-331(A)(3)(c), and R18-2-331(B)]
[Material Permit Conditions are indicated with underline and italics]

b. The Bag Leak Detection System required by Condition III.D.3.a shall meet the requirements of Conditions III.D.3.b(1) through III.D.3.b(11) of this Attachment.

(1) The Bag Leak Detection System must be certified by the manufacturer to be capable of detecting PM emissions at concentrations of 0.0044 grains per actual cubic foot or less. "Certify" shall mean that the instrument manufacturer has tested the instrument on gas streams having a range of particle size distributions and confirmed by means of valid filterable PM tests that the minimum detectable concentration limit is 0.0044 grains per actual cubic foot or less. [A.A.C. R18-2-306(A)(3)(c) and (d)]

(2) The sensor on the Bag Leak Detection System must provide output of relative PM emissions. [A.A.C. R18-2-306(A)(3)(c) and (d)]

(3) The Bag Leak Detection System must have an alarm that will activate automatically when it detects a significant increase in relative PM emissions greater than a preset level.

[A.A.C. R18-2-306(A)(3)(c) and (d)]

(4) The presence of an alarm condition should be clearly apparent to facility operating personnel. [A.A.C. R18-2-306(A)(3)(c)]

(5) For a positive-pressure fabric filter, each compartment or cell must have a bag leak detector. For a negative-pressure or induced-air fabric filter, the bag leak detector must be installed downstream of the fabric filter. If multiple bag leak detectors are required (for either type of fabric filter), detectors may share the system instrumentation and alarm.[A.A.C. R18-2-306(A)(3)(c) and (d)]

(6) The Bag Leak Detection System must be installed, operated, adjusted, and maintained so that it is based on the manufacturer's written specifications and recommendations.

[A.A.C. R18-2-306(A)(3)(c) and (d)]

(7) The baseline output of the Bag Leak Detection System must be established as follows: [A.A.C. R18-2-306(A)(3)(c)]

(a) Adjust the range and the averaging period of the device; and [A.A.C. R18-2-306(A)(3)(c)]

(b) Establish the alarm set points and the alarm delay time. [A.A.C. R18-2-306(A)(3)(c)]

(8) After initial adjustment, the range, averaging period, alarm set points, or alarm delay time may not be adjusted except as specified in the operations and maintenance plan required by Condition III.D.1 of this Attachment. In no event may the range be increased by more than 100 percent or decreased by more than 50 percent over a 1 calendar year period unless the Permittee certifies in writing to the Director that the Dust Collector has been inspected and found to be in good operating condition. [A.A.C. R18-2-306(A)(3)(c)]

(9) The Permittee shall continuously record the output from the Bag Leak Detection System during periods of normal operation. Normal operation does not include periods when the Bag Leak Detection System is being maintained or during startup, shutdown or malfunction. [A.A.C. R18-2-306(A)(3)(c)]

(10) Except as provided in Condition III.D.3.b(11) below, each time the alarm activates, alarm time will be counted as the actual amount of time taken by the Permittee to initiate corrective actions. [A.A.C. R18-2-306(A)(3)(c)]

(11) If inspection of the Dust Collector demonstrates that no corrective actions are necessary, no alarm time will be counted. [A.A.C. R18-2-306(A)(3)(c)]

c. Each 6-month block period for which the Bag Leak Detection System alarm time, as determined in accordance with Conditions III.D.3.b(9) through III.D.3.b(11) above, exceeds the limit established in Condition III.B.4 shall be considered a period of excess emissions. [A.A.C. R18-2-306(A)(5)(b)]

d. The Permittee shall report excess emissions and deviations in accordance with Sections XII.A and XII.B, respectively, in Attachment "A" of this permit. [A.A.C. R18-2-306(A)(5)(b)]

4. Monitoring and Recordkeeping for Dust Collectors H3-DC2, H3-DC3, and H3-K4-DC1&2

a. Visible Emissions Observations

The Permittee shall conduct a monthly visible emissions observation of the exhaust from each dust collector in accordance with EPA Reference Method 22. If visible emissions are observed during the monthly visible emissions observation, the Permittee shall initiate investigation of the dust collector within 24 hours of the occurrence, to identify any need for corrective action. If corrective action is required, the Permittee shall implement such corrective action as soon as practicable in order to avert or minimize possible exceedances of the emission standards in Condition III.B.3. [A.A.C. R18-2-306(A)(3)(c)]

b. Monitoring and Recordkeeping for Dust Collectors

(1) *The Permittee shall install, calibrate*, maintain, and operate, according to the manufacturer's specifications, *a device for monitoring and recording the pressure drop across each dust collector*. This condition is not material in the event failure to comply is due to a sudden and unavoidable breakdown of the process or the control equipment, resulted from unavoidable conditions during a startup or shutdown, or resulted from upset of operations.

[A.A.C. R18-2-331(A)(3)(c), R18-2-331(B), R18-403(A)(1), R18-2-406(A)(4), and R18-2-406(A)(5)]
[Material Permit Conditions are indicated with underline and italics]

(2) The Permittee shall perform monthly inspections of each dust collector listed in Condition III.A of this Attachment and the associated pressure drop continuous parameter monitoring system in accordance with the manufacturers' recommended procedures. The Permittee shall take corrective action following the discovery of any abnormal operation or required maintenance of any dust collector or the associated pressure drop continuous parameter monitoring system as expeditiously as practicable in accordance with good air pollution control practices for minimizing emissions, but no later than 24 hours following detection. [A.A.C. R18-403(A)(1), R18-2-406(A)(4), and R18-2-406(A)(5)]

(3) If a monthly inspection performed pursuant to Condition III.D.4.b(2) above indicates that the pressure drop across any dust collector is outside the range established pursuant to Condition III.E.2.f of this Attachment, the Permittee shall initiate investigation of the control equipment within 24 hours of the occurrence to identify any need for corrective action. If corrective action is required, the Permittee shall implement such corrective action as soon as practicable in order to avert or minimize possible exceedances of the emission standards in Conditions III.B.3.b and III.B.3.d of this Attachment.

[A.A.C. R18-403(A)(1), R18-2-406(A)(4), and R18-2-406(A)(5)]

5. Notification Requirements for Kiln 6 Project

a. On or before the date that this Section becomes effective, the Permittee shall submit written notification of the schedule for shutting down or modifying the emissions units covered by Section IV of Attachment "C".

[A.A.C. R18-2-306.01, R18-2-403(A)(2)]

b. The notification required by Condition III.D.5.a shall include an updated PM netting analysis, and an updated PM_{10} emission offset analysis for the Kiln 6 project. [A.A.C. R18-2-306.01, R18-2-403(A)(2)]

E. Testing Requirements

1. Testing for Existing Sources

The Permittee shall conduct performance tests once during the permit term on all existing sources subject to Conditions III.B.1.a and III.B.2.a of this Attachment in accordance with EPA Reference Method 9 in Appendix A to 40 CFR Part 60.

[A.A.C. R18-2-306(A)(3)(c)]

2. Testing for New Sources

a. The Permittee shall perform initial and periodic performance tests in accordance with Conditions III.E.2.b through III.E.2.e below. Initial performance tests shall be performed within 60 days after achieving the maximum production rate at which the affected facility will be operated, but not later than 180 days after initial startup of such facility.

[A.A.C. R18-2-406(A)(4), R18-2-901(1) {40 CFR 60.8(a)}]

b. For each performance test required pursuant to Condition III.E.2.a above, the Permittee shall submit a test plan to the Director in accordance with Condition XVIII.D of Attachment "A". [A.A.C. R18-2-312(B)]

c. The Permittee shall determine initial compliance with Condition III.B.3.a of this Attachment using the test methods and procedures in Conditions III.E.2.c(1) through III.E.2.c(3) as follows:

[A.A.C. R18-2-901(32) {40 CFR § 60.254(b)}]

(1) EPA Reference Method 5 in Appendix A to 40 CFR Part 60 shall be used to determine the particulate matter concentration.

[A.A.C. R18-2-901(32) {40 CFR § 60.254(b)(1)}]

(2) The sampling time and sample volume for each run shall be at least 60 minutes and 30 dscf.

[A.A.C. R18-2-901(32) {40 CFR § 60.254(b)(1)}]

(3) Sampling shall begin no less than 30 minutes after startup and shall terminate before shutdown procedures begin.

[A.A.C. R18-2-901(32) {40 CFR § 60.254(b)(1)}]

d. The Permittee shall determine initial compliance with Condition III.B.3.c of this Attachment using EPA Reference Method 9 in Appendix A to 40 CFR Part 60 and the procedures in 40 CFR § 60.11 to determine opacity.

[A.A.C. R18-2-901(32) {40 CFR § 60.254(b)(2)}]

e. The Permittee shall demonstrate initial compliance with Conditions III.B.3.b and III.B.3.d of this Attachment by conducting performance tests as follows.

[A.A.C. R18-2-306(A)(3)(c), R18-2-403(A)(1), R-18-406(A)(4) and R-18-406(A)(5)]

(1) Performance tests shall be conducted using Method 5 of Appendix A to 40 CFR Part 60.

[A.A.C. R18-2-306(A)(3)(c), R18-2-403(A)(1), R-18-406(A)(4) and R-18-406(A)(5)]

(2) Each performance test shall consist of three separate runs.

[A.A.C. R18-2-306(A)(3)(c), R18-2-403(A)(1), R-18-406(A)(4) and R-18-406(A)(5)]

(3) Each test run shall be conducted for at least one hour, and the minimum sample volume shall be 30 dscf.

[A.A.C. R18-2-306(A)(3)(c), R18-2-403(A)(1), R-18-406(A)(4) and R-18-406(A)(5)]

(4) The average of the three runs shall be used to determine compliance.

[A.A.C. R18-2-306(A)(3)(c), R18-2-403(A)(1), R-18-406(A)(4) and R-18-406(A)(5)]

f. For each dust collector subject to the requirements of Condition III.D.3.b of this Attachment, during each performance test conducted pursuant to Condition III.E.2.e above, the Permittee shall determine a range of pressure drop values for the dust collector using the following procedures:

(1) During each performance test run, continuously monitor and record the pressure drop across the dust collector as required under Condition III.D.3.b(1) of this Attachment;

[A.A.C. R18-2-306(A)(3)(c), R18-2-403(A)(1), R18-2-406(A)(4), and R18-2-406(A)(5)]

(2) Determine a range of dust collector pressure drop values and associated averaging time, based on the pressure drop data monitored during the performance test. The maximum pressure drop (i.e., the high end of the range) shall be 3.0 in. w.c. greater than the arithmetic average of the pressure drop readings during the performance test. The minimum pressure drop (i.e., the low end of the range) shall be either one-half the arithmetic average of the pressure drop readings during the performance test or 3.0 in. w.c. less than the arithmetic average of the pressure drop readings during the performance test, whichever is greater.

[A.A.C. R18-2-306(A)(3)(c), R18-2-403(A)(1), R18-2-406(A)(4), and R18-2-406(A)(5)]

g. For any affected facility for which the initial performance tests required by Condition III.E.2.a of this Attachment are performed with more than three years remaining in the permit term, the performance tests required by Condition III.E.2.a shall be repeated once during the permit term.

[A.A.C. R18-2-306(A)(3)(c), R18-2-403(A)(1), R-18-406(A)(4), and R-18-406(A)(5)]

F. Permit Shield

Compliance with the terms of this Section shall be deemed compliance with the following applicable requirement(s) in effect on the date of permit issuance: 40 CFR 60 Subpart Y, A.A.C. R18-2-702, A.A.C. R18-2-901(32), SIP Rule 9-3-516(A)(2).

[A.A.C. R18-2-325]

IV. KILN 6, RAW MILL, AND CLINKER COOLER

The requirements of this Section shall apply and shall replace Section V of Attachment "C" beginning on the date when Kiln 6 becomes operational. Kiln 6 shall be deemed operational on the first calendar day when its 30-day rolling average production rate exceeds 6,480 tons of cement clinker per day, or on the 180th day following initial firing of fuel, whichever is earlier.

A. List of Emission Units

Emission Unit/Affected Source Name	Emission Unit/ Affected Source Description (Nominal Capacity)	Control Measure (Control Device ID Number)	Emission Point ID Number
Kiln 6 (H3-K6) with Inline Raw Mill (D4-RM1)	Dry process; 300 tons clinker per hour	Selective Non-Catalytic Reduction (H4-SNCR) Baghouse (H5-GB)	Kiln 6 Stack (H5-GB)
Clinker Cooler (H2-QC)	300 tons clinker per hour	Baghouse (H2-GB)	Cooler Stack (H2-GB)

B. Emission Limits and Standards

1. Operational Limitations

a. Cement clinker produced in the Kiln 6 inline kiln/raw mill shall not exceed 7,950 tons per day based on an hourly rolling 24-hour sum.
[A.A.C. R18-2-306.01]

b. Cement clinker produced in the Kiln 6 inline kiln/raw mill shall not exceed 2,300,000 tons per year based on a monthly rolling 12-month sum. [A.A.C. R18-2-306.01]

c. *The Kiln 6 inline kiln/raw mill shall not be equipped with an alkali bypass*. [A.A.C. R18-2-306.01(A) and R18-2-331(A)(3)(a)]
[Material Permit Conditions are indicated with underline and italics]

d. *The Inline Raw Mill (D4-RM1) shall not be operated when Kiln 6 (H3-K6) is not operating.* [A.A.C. R18-2-306.01(A) and R18-2-331(A)(3)(a)]
[Material Permit Conditions are indicated with underline and italics]

2. Particulate Matter Emission Standards

a. The Permittee shall not cause or allow to be emitted into the atmosphere from the Kiln 6 inline kiln/raw mill any gases which contain PM_{10} in excess of 0.008 grains per dry standard cubic foot.
[A.A.C. R18-2-403(A)(1) and R18-2-406(A)(4)]

b. The Permittee shall not cause or allow to be emitted into the atmosphere from the Clinker Cooler any gases which contain PM_{10} in excess of 0.005 grains per dry standard cubic foot.
[A.A.C. R18-2-403(A)(1) and R18-2-406(A)(4)}]

c. The Permittee shall not cause or allow to be emitted into the atmosphere from the Kiln 6 inline kiln/raw mill any gases which contain PM_{10} in excess of 28.03 lbs/hr. [A.A.C. R18-2-306.02, R18-2-406(A)(5)]

d. The Permittee shall not cause or allow to be emitted into the atmosphere from the Clinker Cooler any gases which contain PM_{10} in excess of 7.88 lbs/hr. [A.A.C. R18-2-306.02, R18-2-406(A)(5)]

e. The Permittee shall not cause or allow to be emitted into the atmosphere from the Kiln 6 inline kiln/raw mill any gases which contain particulate matter (PM) in excess of 0.30 lb per ton of feed (dry basis) to the Kiln.
[A.A.C. R18-2-1101(B)(50) {40 CFR § 63.1343(c)(1)}]

f. The Permittee shall not cause or allow to be emitted into the atmosphere from the Clinker Cooler any gases which contain particulate matter (PM) in excess of 0.10 lb per ton of feed (dry basis) to the Kiln.
[A.A.C. R18-2-1101(B)(50) {40 CFR § 63.1345(a)(1)}]

g. The Permittee shall not cause or allow to be emitted into the atmosphere from the Kiln 6 inline kiln/raw mill any gases which exhibit opacity greater than 20 percent, based on a 6-minute block average.
[A.A.C. R18-2-1101(B)(50) {40 CFR § 63.1343(c)(2)}]

h. The Permittee shall not cause or allow to be emitted into the atmosphere from the Clinker Cooler any gases which exhibit opacity greater than 10 percent, based on a 6-minute block average.

[A.A.C. R18-2-1101(B)(50) {40 CFR § 63.1345(a)(2)}]

i. The Permittee shall maintain and operate Baghouses H2-GB and H5-GB such that the alarm of the associated Bag Leak Detection System, as required by Condition IV.D.7.d of this Attachment, is not activated and alarm condition does not exist for more than 5 percent of the total operating time in a 6-month block period. [A.A.C. R18-2-406(A)(4)]

3. Sulfur Dioxide Emission Standard

a. The Permittee shall not cause or allow to be emitted into the atmosphere from the Kiln 6 inline kiln/raw mill any gases which contain SO_2 in excess of 125.0 lbs/hr based on an hourly rolling 3-hour average.

[A.A.C. R18-2-406(A)(5)]

b. The Permittee shall not cause or allow to be emitted into the atmosphere from the Kiln 6 inline kiln/raw mill any gases which contain SO_2 in excess of 0.16 lb per ton of clinker based on a daily rolling 30-day average. [A.A.C. R18-2-406(A)(4)]

4. Nitrogen Oxides Emission Standards

a. The Permittee shall not cause or allow to be emitted into the atmosphere from the Kiln 6 inline kiln/raw mill any gases which contain NO_X in excess of 860.0 lbs/hr based on an hourly rolling 24-hour average.

[A.A.C. R18-2-306.02, R18-2-406(A)(5)]

b. *The Permittee shall not cause or allow to be emitted into the atmosphere from the Kiln 6 inline kiln/raw mill any gases which contain NO_X in excess of 2,242.5 tons per year based on a daily rolling 365-day total.*

[A.A.C. R18-2-306.01(A) and R18-2-331.A.3.a]
[Material Permit Conditions are indicated with underline and italics]

5. Carbon Monoxide Emission Standards

a. The Permittee shall not cause or allow to be emitted into the atmosphere from the Kiln 6 inline kiln/raw mill any gases which contain CO in excess of 2,700 lbs/hr based on a block hourly average.

[A.A.C. R18-2-306.02]

b. *The Permittee shall not cause or allow to be emitted into the atmosphere from the Kiln 6 inline kiln/raw mill any gases which contain CO in excess of 3,680 tons per year based on a daily rolling 365-day total.*

[A.A.C. R18-2-306.01(A) and R18-2-331(A)(3)(a)]
[Material Permit Conditions are indicated with underline and italics]

6. Volatile Organic Compounds and Organic HAP Emission Standards

a. The Permittee shall not cause or allow to be emitted into the atmosphere from the Kiln 6 inline kiln/raw mill any gases which contain total hydrocarbon (THC) emissions in excess of 20 ppmvd as propane, corrected

to seven percent oxygen, based on an hourly block average.

[A.A.C. R18-2-1101(B)(50) {40 CFR §§ 63.1343(c)(4)}]

b. *The Permittee shall not cause or allow to be emitted into the atmosphere from the Kiln 6 inline kiln/raw mill any gases which contain VOC emissions in excess of 44.25 tons per year, based on a daily rolling 365-day total.* [A.A.C. R18-2-306.01(A) and R18-2-331(A)(3)(a)]

[Material Permit Conditions are indicated with underline and italics]

7. Dioxins/Furans Emission Standards

a. The Permittee shall not cause or allow to be emitted into the atmosphere from the Kiln 6 inline kiln/raw mill any gases which contain dioxins/furans (D/F) in excess of:

[A.A.C. R18-2-1101(B)(50) {40 CFR § 63.1343(c)(3)}]

(1) 0.20 ng per dscm (8.7×10^{-11} gr/dscf) (toxicity equivalent (TEQ)) corrected to seven percent oxygen; or

[A.A.C. R18-2-1101(B)(50) {40 CFR § 63.1343(c)(3)(i)}]

(2) 0.40 ng per dscm (1.7×10^{-10} gr per dscf) (TEQ) corrected to seven percent oxygen, when the average of the performance test run average temperatures at the inlet to the particulate matter control device is 400 °F or less.

[A.A.C. R18-2-1101(B)(50) {40 CFR § 63.1343(c)(3)(ii)}]

b. The Permittee shall operate the Kiln 6 inline kiln/raw mill such that:

[A.A.C. R18-2-1101(B)(50) {40 CFR § 63.1344(a)}]

(1) When the Inline Raw Mill is operating, the temperature of the gas at the inlet to Baghouse H5-GB does not exceed the applicable temperature limit, determined in accordance with Condition IV.E.5.a(9) of this Attachment and established during the performance test when the Inline Raw Mill was operating.

[A.A.C. R18-2-1101(B)(50) {40 CFR § 63.1344(a)(1)}]

(2) When the Inline Raw Mill is not operating, the temperature of the gas at the inlet to Baghouse H5-GB does not exceed the applicable temperature limit, determined in accordance with Condition IV.E.5.a(9) of this Attachment and established during the performance test when the Inline Raw Mill was not operating. [A.A.C. R18-2-1101(B)(50) {40 CFR § 63.1344(a)(2)}]

8. Mercury Emission Standards

a. The Permittee shall not cause or allow to be emitted into the atmosphere from the Kiln 6 inline kiln/raw mill any gases which contain mercury in excess of 41 µg per dscm corrected to seven percent oxygen.

[A.A.C. R18-2-1101(B)(50) {40 CFR § 63.1343(c)(5)}]

b. The Permittee shall not use as a raw material or fuel in the Kiln 6 inline kiln/raw mill any fly ash where the mercury content of the fly ash has been increased through the use of activated carbon, or any other sorbent unless the Permittee can demonstrate that the use of that fly ash will not result in an increase in mercury emissions over baseline emissions (i.e.,

emissions not using the fly ash). The Permittee has the burden of proving there has been no emissions increase over baseline.

[A.A.C. R18-2-1101(B)(50) {40 CFR § 63.1344(g)}]

c. The Permittee shall remove from the Kiln 6 inline kiln/raw mill system (i.e., shall not recycle to the kiln) sufficient cement kiln dust to maintain the desired product quality. [A.A.C. R18-2-1101(B)(50) {40 CFR § 63.1344(h)}]

d. The Permittee shall operate the Kiln 6 inline kiln/raw mill such that the average hourly cement kiln dust recycle rate does not exceed the average hourly cement kiln dust recycle rate measured during mercury performance testing. Any exceedance of this average hourly rate is considered a violation of the mercury emission standard in Condition IV.B.8.a above. [A.A.C. R18-2-1101(B)(50) {40 CFR § 63.1344(i)}]

C. Air Pollution Control Requirements

1. *At all times when the Kiln 6 inline kiln/raw mill is in operation, including periods of startup, shutdown, and malfunction, the Permittee shall install,* maintain and *operate the Selective Non-Catalytic Reduction system in a manner consistent with good air pollution control practice for minimizing NO_X emissions as necessary to ensure continuous compliance with Conditions IV.B.4.a and IV.B.4.b of this Attachment.* This condition is not material in the event failure to comply is due to a sudden and unavoidable breakdown of the process or the control equipment, resulted from unavoidable conditions during a startup or shutdown, or resulted from upset of operations.

[A.A.C. R18-2-306.01, R18-2-331(A)(3)(d) and (e), and R18-2-331(B)]
[Material Permit Conditions are indicated with underline and italics]

2. *At all times when the Kiln 6 inline kiln/raw mill is in operation, including periods of startup, shutdown, and malfunction, the Permittee shall, to the extent practicable, install,* maintain and *operate Baghouse H5-GB in a manner consistent with good air pollution control practice for minimizing PM and PM_{10} emissions.* This condition is not material in the event failure to comply is due to a sudden and unavoidable breakdown of the process or the control equipment, resulted from unavoidable conditions during a startup or shutdown, or resulted from upset of operations.

[A.A.C. R18-2-331(A)(3)(d) and (e), R18-2-331(B), R18-2-403(A)(1), and R18-2-406(A)(4)]
[Material Permit Conditions are indicated with underline and italics]

3. *At all times when the Clinker Cooler is in operation, including periods of startup, shutdown, and malfunction, the Permittee shall, to the extent practicable, install,* maintain and *operate Baghouse H2-GB in a manner consistent with good air pollution control practice for minimizing PM and PM_{10} emissions.* This condition is not material in the event failure to comply is due to a sudden and unavoidable breakdown of the process or the control equipment, resulted from unavoidable conditions during a startup or shutdown, or resulted from upset of operations.

[A.A.C. R18-2-331(A)(3)(d) and (e), R18-2-331(B), R18-2-403(A)(1), and R18-2-406(A)(4)]
[Material Permit Conditions are indicated with underline and italics.]

D. Monitoring, Recordkeeping, and Reporting Requirements

1. Monitoring and Recordkeeping for Operational Limitations

a. *The Permittee shall install, calibrate*, maintain, and operate *monitoring devices for measuring and recording the process weight of total feed to Kiln 6.* This condition is not material in the event failure to comply is due to a sudden and unavoidable breakdown of the process or the control equipment, resulted from unavoidable conditions during a startup or shutdown, or resulted from upset of operations.

[A.A.C. R18-2-306(A)(3)(c) , R18-2-331(A)(3)(c), R18-2-331(B), and R18-2-406(A)(4)]
[Material Permit Conditions are indicated with underline and italics]

b. Each monitoring device shall be designed with an accuracy of ± 2% over its operating range. [A.A.C. R18-2-306(A)(3)(c) and R18-2-406(A)(4)]

c. The calibration of each monitoring device shall be verified in accordance with manufacturer's specifications at least once per calendar year.

[A.A.C. R18-2-306(A)(3)(c) and R18-2-406(A)(4)]

d. The Permittee shall use daily records of kiln feed rate to calculate, and shall maintain daily records of, clinker production rate. Records of clinker production rate shall be maintained on a daily basis, rolling 30-day total basis, and rolling 365-day total basis.

[A.A.C. R18-2-306(A)(3)(c) and R18-2-406(A)(4)]

2. Monitoring and Recordkeeping for Particulate Matter and Opacity

a. Opacity Monitoring

(1) *The Permittee shall install, calibrate*, maintain, and operate *continuous opacity monitoring systems (COMS) to continuously monitor the opacity of visible emissions from the Kiln 6 Stack and the Clinker Cooler Stack*. This condition is not material in the event failure to comply is due to a sudden and unavoidable breakdown of the process or the control equipment, resulted from unavoidable conditions during a startup or shutdown, or resulted from upset of operations.

[A.A.C. R18-2-331(A)(3)(c), R18-2-331(B), and R18-2-1101(B)(50) {40 CFR § 63.1350(c) and (d)}]
[Material Permit Conditions are indicated with underline and italics]

(2) Each COMS required by Condition IV.D.2.a(1) above shall meet the requirements of Performance Specification 1, *Specifications and test procedures for opacity continuous emission monitoring systems in stationary sources*, in Appendix B to 40 CFR Part 60.

[A.A.C. R18-2-1101(B)(50) {40 CFR §§ 63.1350(c) and (d)}]

(3) For each COMS, the Permittee shall maintain all records required by 40 CFR § 63.10(c).

[A.A.C. R18-2-1101(B)(50) {40 CFR §§ 63.1355(c) }]

(4) If the average opacity of visible emissions from the Kiln 6 Stack for any 6-minute block period exceeds 20 percent, this shall constitute a period of excess emissions and a violation of

Condition IV.B.2.g of this Attachment.

[A.A.C. R18-2-1101(B)(50) {40 CFR § 63.1350(c)(3)}]

(5) If the average opacity of visible emissions from the Clinker Cooler Stack for any 6-minute block period exceeds 10 percent, this shall constitute a period of excess emissions and a violation of Condition IV.B.2.h of this Attachment.

[A.A.C. R18-2-1101(B)(50) {40 CFR § 63.1350 (d)(3)}]

(6) The Permittee shall report excess emissions and deviations in accordance with Sections XII.A and XII.B, respectively, in Attachment "A". [A.A.C. R18-2-306(A)(5)(b)]

b. Particulate Matter Emission Monitoring

(1) *The Permittee shall install, calibrate*, maintain, and operate *a particulate matter continuous emission monitoring system (PM CEMS) to measure the particulate matter discharged to the atmosphere from Kiln 6 in-line kiln/raw mill.* All requirements relating to installation, calibration, maintenance, operation or performance of the PM CEMS and implementation of the PM CEMS are deferred pending further rulemaking. This condition is not material in the event failure to comply is due to a sudden and unavoidable breakdown of the process or the control equipment, resulted from unavoidable conditions during a startup or shutdown, or resulted from upset of operations.

[A.A.C. R18-2-331(A)(3)(c), A.A.C R18-2-331(B), 40 CFR §63.1350(k)]
[Material Permit Conditions are indicated with underline and italics]

(2) Until such time that a PM CEMS is installed, the Permittee shall monitor particulate matter emissions from Kiln 6 in-line kiln/raw mill in the following manner: [A.A.C. R18-2-306.A.3.c]

(a) The Permittee shall evaluate opacity measurements from the COM system on a 2-hour rolling average. If the 2-hour rolling average opacity exceeds 15 percent, The Permittee shall initiate investigation of the control equipment within 24 hours of the occurrence, to identify any need for corrective action. If corrective action is required, the Permittee shall implement such corrective action as soon as practicable in order to avert or minimize possible exceedances of the particulate matter standards in Condition IV.B.2.a of this Attachment. If the 2-hour rolling average opacity remains above 15 percent for 72 consecutive hours after the first occurrence, the Permittee shall submit a schedule to ADEQ that satisfies the requirements of Condition XII.D of Attachment "A". An opacity measurement of 15% is not by itself an indication of a violation of the particulate matter standard.

(b) The Permittee shall maintain a record of 2-hour rolling average opacity measurements performed in accordance with Condition IV.D.2.b(2)(a) above, and of any corrective actions taken. The record of corrective

actions taken shall include the date and time that the 2-hour rolling average opacity exceeded 15 percent, and the date and time the corrective action, if any, was completed.

3. Monitoring and Recordkeeping for SO_2, NO_X, CO, and VOC emissions

a. *The Permittee shall install, calibrate*, maintain, and operate *continuous emission rate monitoring systems for monitoring and recording the SO_2, NO_X, CO, and VOC emission rates to the atmosphere from the Kiln 6 Stack.* This condition is not material in the event failure to comply is due to a sudden and unavoidable breakdown of the process or the control equipment, resulted from unavoidable conditions during a startup or shutdown, or resulted from upset of operations.

[A.A.C. R18-2-306(A)(3)(c), R18-2-331(A)(3)(c), R18-2-331(B)]
[Material Permit Conditions are indicated with underline and italics]

b. The continuous emission rate monitoring systems required by Condition IV.D.3.a above shall meet the following requirements:

(1) 40 CFR Part 60, Appendix B, "Performance Specifications".

(a) The SO_2 and NO_X continuous emission rate monitoring systems shall meet the requirements of Performance Specification 2, *Specifications and test procedures for SO_2 and NO_X continuous emission monitoring systems in stationary sources*, in Appendix B to 40 CFR Part 60.

(b) The CO continuous emission rate monitoring system shall meet the requirements of Performance Specification 4a, Specifications and test procedures for carbon monoxide continuous emission monitoring systems in stationary sources, in Appendix B to 40 CFR Part 60.

(c) The VOC continuous emission rate monitoring system shall meet the requirements of Performance Specification 8, Performance specifications for volatile organic compound continuous emission monitoring systems in stationary sources, in Appendix B to 40 CFR Part 60.

(d) The SO_2, NO_X, CO, and VOC continuous emission rate monitoring systems shall meet the requirements of Performance Specification 6, *Specifications and test procedures for continuous emission rate monitoring systems in stationary sources*, in Appendix B to 40 CFR Part 60.

(2) 40 CFR Part 60, Appendix F, "Quality Assurance Procedures".

(3) The Permittee shall submit a Quality Assurance/Quality Control Plan to the Director at least 90 days prior to the instrument start-up including procedures for dealing with data gaps based on the procedures contained in 40 CFR 75, Subpart D (§ 75.30). When approved by the Director, this plan shall be implemented.

[A.A.C. R18-2-306(A)(3)(c), R18-2-406(A)(4)]

c. The Permittee shall maintain a file of all measurements, including continuous monitoring system, monitoring device, and performance testing measurements; all continuous monitoring system performance evaluations; all continuous monitoring system or monitoring device calibration checks; adjustments and maintenance performed on these systems or devices; and all other information required by this Part recorded in a permanent form suitable for inspection. The file shall be retained for at least five years following the date of such measurements, maintenance, reports, and records. [A.A.C. R18-2-306(A)(3), R18-2-406(A)(4)]

d. Each continuous monitoring system shall be installed and operational prior to conducting the required initial performance tests. Verification of operational status shall, at a minimum, include completion of the manufacturer's written requirements or recommendations for installation, operation, and calibration of these devices. Notification of the operational status of the continuous monitoring system shall be provided to the Director within 30 days after the system becomes operational, or by the date on which the initial performance test is conducted, whichever occurs first. [A.A.C. R18-2-306(A)(3), R18-2-406(A)(4)]

e. Except for system breakdowns, repairs, calibration checks, and zero and span adjustments, the Permittee shall meet minimum frequency of operation requirements as follows: the continuous monitoring system shall complete a minimum of one cycle of operation (sampling, analyzing, and data recording) for each successive 15-minute period.

[A.A.C. R18-2-306(A)(3), R18-2-406(A)(4)]

f. For continuous monitoring system measurements, one-hour arithmetic averages shall be computed from four or more data points equally spaced over each one-hour period. Data recorded during periods of continuous monitoring system breakdowns, repairs, calibration checks, and zero and span adjustments shall not be included in the data averages computed under this condition. [A.A.C. R18-2-306(A)(3), R18-2-406(A)(4)]

g. For the purposes of demonstrating compliance with emission standards expressed as mass emissions per unit of clinker production, averages shall be calculated as the total emission rate over the averaging period, as measured and recorded in accordance with Conditions IV.D.3.a through IV.D.3.f above, divided by the total clinker production rate over the averaging period, as measured and recorded in accordance with Condition IV.D.1. [A.A.C. R18-2-306(A)(3), R18-2-406(A)(4)]

h. The following shall be considered periods of excess emissions:

(1) All 3-hour periods for which the SO_2 emission rate to the atmosphere as determined in accordance with Condition IV.D.3 exceeds the emission standard in Condition IV.B.3.a. of this Attachment. [A.A.C. R18-2-306(A)(3), R18-2-406(A)(5)]

(2) All 30-day periods for which the SO_2 emission rate to the atmosphere as determined in accordance with Condition IV.D.3 exceeds the emission standard in Condition IV.B.3.b of this Attachment. [A.A.C. R18-2-306(A)(3), R18-2-406(A)(4)]

(3) All 24-hour periods for which the NO_X emission rate to the atmosphere as determined in accordance with Condition IV.D.3 exceeds the emission standard in Condition IV.B.4.a. of this Attachment [A.A.C. R18-2-306(A)(3)]

(4) All 365-day periods for which the NO_X emission rate to the atmosphere as determined in accordance with Condition IV.D.3 exceeds the applicable emission standard in Condition IV.B.4.b of this Attachment. [A.A.C. R18-2-306(A)(3)]

(5) All 1-hour periods for which the CO emission rate to the atmosphere as determined in accordance with Condition IV.D.3 exceeds the emission standard in Condition IV.B.5.a of this Attachment. [A.A.C. R18-2-306(A)(3)]

(6) All 365-day periods for which the CO emission rate to the atmosphere as determined in accordance with Condition IV.D.3 exceeds the emission standard in Condition IV.B.5.b of this Attachment. [A.A.C. R18-2-306(A)(3)]

(7) All 365-day periods for which the VOC emission rate to the atmosphere as determined in accordance with Condition IV.D.3 exceeds the emission standard in Condition IV.B.6.b of this Attachment. [A.A.C. R18-2-306(A)(3)]

i. The Permittee shall report excess emissions and deviations in accordance with Sections XII.A and XII.B, respectively, in Attachment "A".

[A.A.C. R18-2-306(A)(5)(b)]

4. Monitoring and Recordkeeping for Organic HAP.

a. *The Permittee shall install, calibrate*, maintain, and operate *a continuous emission monitoring system (CEMS) for monitoring and recording the concentration by volume (dry basis, corrected to 7.0 percent oxygen) of THC emissions into the atmosphere from the Rotary Kiln and Raw Mill*. This condition is not material in the event failure to comply is due to a sudden and unavoidable breakdown of the process or the control equipment, resulted from unavoidable conditions during a startup or shutdown, or resulted from upset of operations.

[A.A.C. R18-2-331(A)(3)(c), R18-2-331(B), and R18-2-1101(B)(50) {40 CFR § 63.1350(h)(1)}]
[Material Permit Conditions are indicated with underline and italics]

b. The CEMS required by Condition IV.D.4.a above shall meet the requirements of Performance Specification 8a, specifications and test procedures for total hydrocarbon continuous monitoring systems in stationary sources, in Appendix B to 40 CFR Part 60.

[A.A.C. R18-2-1101(B)(50) {40 CFR § 63.1350(h)(1)}]

c. For the CEMS required by Condition IV.D.4.a above, the Permittee shall maintain all records required by 40 CFR § 63.10(c).

[A.A.C. R18-2-1101(B)(50) {40 CFR §§ 63.1355(c) }]

d. Any hourly average THC concentration in any gas discharged from the Rotary Kiln or Raw Mill, exceeding 20 ppmvd, reported as propane, corrected to seven percent oxygen, shall constitute a period of excess emissions and a violation of Condition IV.B.6.a of this Attachment.

[A.A.C. R18-2-1101(B)(50) {40 CFR § 63.1350(h)(4)}]

e. The Permittee shall report excess emissions and deviations in accordance with Sections XII.A and XII.B, respectively, in Attachment "A".

[A.A.C. R18-2-306(A)(5)(b)]

5. Monitoring and Recordkeeping for Dioxin/Furan Emissions

a. *The Permittee shall install, calibrate*, maintain, and operate *a continuous monitor to record the temperature of the exhaust gases from the Kiln 6 inline kiln/raw mill at the inlet to, or upstream of, Baghouse H5-GB*. This condition is not material in the event failure to comply is due to a sudden and unavoidable breakdown of the process or the control equipment, resulted from unavoidable conditions during a startup or shutdown, or resulted from upset of operations.

[A.A.C. R18-2-331(A)(3)(c), R18-2-331(B), and R18-2-1101(B)(50) {40 CFR § 63.1350(f)(1) and (f)(2)}]
[Material Permit Conditions are indicated with underline and italics]

(1) The recorder response range must include zero and 1.5 times either of the average temperatures established according to the requirements in Condition IV.E.5.a(8) of this Attachment.

[A.A.C. R18-2-1101(B)(50) {40 CFR § 63.1350(f)(1)(i)}]

(2) The reference method must be a National Institute of Standards and Technology calibrated reference thermocouple-potentiometer system or alternate reference, subject to approval by the Director. [A.A.C. R18-2-1101(B)(50) {40 CFR § 63.1350(f)(1)(ii)}]

b. The three-hour rolling average temperature shall be calculated as the average of 180 successive one-minute average temperatures.

[A.A.C. R18-2-1101(B)(50) {40 CFR § 63.1350(f)(3)}]

c. Periods of time when one-minute averages are not available shall be ignored when calculating three-hour rolling averages. When one-minute averages become available, the first one-minute average is added to the previous 179 values to calculate the three-hour rolling average.

[A.A.C. R18-2-1101(B)(50) {40 CFR § 63.1350(f)(4)}]

d. When the operating status of the Inline Raw Mill is changed from off to on, or from on to off, the calculation of the three-hour rolling average temperature must begin anew, without considering previous recordings.

[A.A.C. R18-2-1101(B)(50) {40 CFR § 63.1350(f)(5)}]

e. *The calibration of all thermocouples and other temperature sensors shall be verified at least once every three months.* This condition is not material in the event failure to comply is due to a sudden and unavoidable breakdown of the process or the control equipment, resulted from unavoidable conditions during a startup or shutdown, or resulted from upset of operations.

[A.A.C. R18-2-331(A)(3)(c), R18-2-331(B), and R18-2-1101(B)(50) {40 CFR § 63.1350(f)(6)}]
[Material Permit Conditions are indicated with underline and italics]

f. For the continuous temperature monitoring system required by Condition IV.D.5.a above, the Permittee shall maintain all records required by 40 CFR § 63.10(c). [A.A.C. R18-2-1101(B)(50) {40 CFR §§ 63.1355(c)}]

g. The Permittee shall conduct an inspection of the components of the combustion system of Kiln 6 at least once per year.

[A.A.C. R18-2-1101(B)(50) {40 CFR § 63.1350(i)}]

6. Monitoring and Recordkeeping for Mercury Emissions

a. In order to demonstrate continuous compliance with Condition IV.B.8.a, *the Permittee shall install, calibrate*, maintain, and operate a *Bag Leak Detection System for detecting leaks in Baghouse H5-GB* as required by Condition IV.D.7.c of this Attachment This condition is not material in the event failure to comply is due to a sudden and unavoidable breakdown of the process or the control equipment, resulted from unavoidable conditions during a startup or shutdown, or resulted from upset of operations.

[A.A.C. R18-2-331(A)(3)(c), R18-2-331(B), and R18-2-1101(B)(50) {40 CFR § 63.1350(n), 40 CFR § 63.995(c) by ref.}]
[Material Permit Conditions are indicated with underline and italics]

b. In order to demonstrate continuous compliance with Condition IV.B.8.b, for each shipment of fly ash received and used as a raw material or fuel in the Kiln 6 inline kiln/raw mill, the Permittee shall obtain a certification from the supplier to demonstrate that the fly ash was not derived from a source in which the use of activated carbon, or any other sorbent, is used as a method of mercury emissions control. The certification shall include the name of the supplier and a signed statement from the supplier confirming that the fly ash was not derived from a source in which the use of activated carbon, or any other sorbent, is used as a method of emission control.

[A.A.C. R18-2-1101(B)(50) {40 CFR § 63.1350(o)}]

c. If the Permittee opts to use in the Kiln 6 inline kiln/raw mill a fly ash derived from a source in which the use of activated carbon, or any other sorbent, is used as a method of mercury emissions control and to demonstrate that the use of this fly ash does not increase mercury emissions, the Permittee shall obtain daily fly ash samples, composites monthly, and analyze the samples for mercury.

[A.A.C. R18-2-1101(B)(50) {40 CFR § 63.1350(p)}]

d. The Permittee shall keep annual records of the amount of cement kiln dust which is removed from the Kiln 6 inline kiln/raw mill system and either disposed of as solid waste or otherwise recycled for a beneficial use outside of the kiln system.
[A.A.C. R18-2-1101(B)(50) {40 CFR § 63.1355(d)}]

e. The Permittee shall keep records of the amount of cement kiln dust recycled to the Kiln 6 inline kiln/raw mill on an hourly basis.

[A.A.C. R18-2-1101(B)(50) {40 CFR § 63.1355(e)}]

f. The Permittee shall keep records of all fly ash supplier certifications as required by Condition IV.D.6.b above.

[A.A.C. R18-2-1101(B)(50) {40 CFR § 63.1355(f)}]

7. Monitoring and Recordkeeping for Baghouses H2-GB and H5-GB

a. For the purpose of demonstrating compliance with Conditions IV.B.2.a through IV.B.2.d of this Attachment, and in accordance with the requirements of 40 CFR Part 64, the Permittee shall maintain and implement the approved Compliance Assurance Monitoring (CAM) Plans for Baghouses H2-GB and H5-GB.

[A.A.C. R18-2-306(A)(3) & (4) {40 CFR Part 64 - CAM}, R18-2-403(A)(1), and R18-2-406(A)(4)]

b. Operation of approved monitoring in accordance with 40 CFR 64.7 shall commence on the date when Kiln 6 becomes operational.

[A.A.C. R18-2-306(A)(3) & (4) {40 CFR Part 64 - CAM}, R18-2-403(A)(1), and R18-2-406(A)(4)]

c. *The Permittee shall install, calibrate*, maintain, and operate *Bag Leak Detection Systems for detecting leaks in Baghouses H2-GB and H5-GB.* This condition is not material in the event failure to comply is due to a sudden and unavoidable breakdown of the process or the control equipment, resulted from unavoidable conditions during a startup or shutdown, or resulted from upset of operations.

[A.A.C. R18-2-306(A)(3) & (4) {40 CFR Part 64 - CAM}, R18-2-331(A)(3)(c) & (B), R18-2-403(A)(1), and R18-2-406(A)(4)]
[Material Permit Conditions are indicated with underline and italics]

d. The Bag Leak Detection Systems required by Condition IV.D.7.c above shall meet the requirements of Conditions IV.D.7.d(1) through IV.D.7.d(11) of this Attachment.

(1) The Bag Leak Detection System must be certified by the manufacturer to be capable of detecting PM emissions at concentrations of 0.0044 grains per actual cubic foot or less. "Certify" shall mean that the instrument manufacturer has tested the instrument on gas streams having a range of particle size distributions and confirmed by means of valid filterable PM tests that the minimum detectable concentration limit is 0.0044 grains per actual cubic foot or less.

[A.A.C. R18-2-306(A)(3)(c) & (d) {40 CFR Part 64 - CAM}, R18-2-403(A)(1), and R18-2-406(A)(4)]

(2) The sensor on the Bag Leak Detection System must provide output of relative PM emissions.

[A.A.C. R18-2-306(A)(3)(c) & (d) {40 CFR Part 64 - CAM}, R18-2-403(A)(1), and R18-2-406(A)(4)]

(3) The Bag Leak Detection System must have an alarm that will activate automatically when it detects a significant increase in relative PM emissions greater than a preset level.

[A.A.C. R18-2-306(A)(3)(c) & (d) {40 CFR Part 64 - CAM}, R18-2-403(A)(1), and R18-2-406(A)(4)]

(4) The presence of an alarm condition should be clearly apparent to facility operating personnel.

[A.A.C. R18-2-306(A)(3)(c) & (d) {40 CFR Part 64 - CAM}, R18-2-403(A)(1), and R18-2-406(A)(4)]

(5) For a positive-pressure fabric filter, each compartment or cell must have a bag leak detector. For a negative-pressure or induced-air fabric filter, the bag leak detector must be installed downstream of the fabric filter. If multiple bag leak detectors are required (for either type of fabric filter), detectors may share the

system instrumentation and alarm.

[A.A.C. R18-2-306(A)(3)(c) & (d) {40 CFR Part 64 - CAM}, R18-2-403(A)(1), and R18-2-406(A)(4)]

(6) The Bag Leak Detection System must be installed, operated, adjusted, and maintained so that it is based on the manufacturer's written specifications and recommendations.

[A.A.C. R18-2-306(A)(3)(c) & (d) {40 CFR Part 64 - CAM}, R18-2-403(A)(1), and R18-2-406(A)(4)]

(7) The baseline output of the Bag Leak Detection System must be established as follows:

[A.A.C. R18-2-306(A)(3)(c) & (d) {40 CFR Part 64 - CAM}, R18-2-403(A)(1), and R18-2-406(A)(4)]

(a) Adjust the range and the averaging period of the device; and

[A.A.C. R18-2-306(A)(3)(c) & (d) {40 CFR Part 64 - CAM}, R18-2-403(A)(1), and R18-2-406(A)(4)]

(b) Establish the alarm set points and the alarm delay time.

[A.A.C. R18-2-306(A)(3)(c) & (d) {40 CFR Part 64 - CAM}, R18-2-403(A)(1), and R18-2-406(A)(4)]

(8) After initial adjustment, the range, averaging period, alarm set points, or alarm delay time may not be adjusted except as specified in the operations and maintenance plan required by Condition IV.D.8.a of this Attachment. In no event may the range be increased by more than 100 percent or decreased by more than 50 percent over a 1 calendar year period unless the Permittee certifies in writing to the Director that the Baghouse has been inspected and found to be in good operating condition.

[A.A.C. R18-2-306(A)(3)(c) & (d) {40 CFR Part 64 - CAM}, R18-2-403(A)(1), and R18-2-406(A)(4)]

(9) The Permittee shall continuously record the output from the Bag Leak Detection System during periods of normal operation. Normal operation does not include periods when the Bag Leak Detection System is being maintained or during startup, shutdown or malfunction.

[A.A.C. R18-2-306(A)(3)(c) & (d) {40 CFR Part 64 - CAM}, R18-2-403(A)(1), and R18-2-406(A)(4)]

(10) Except as provided in Condition IV.D.7.d(11) below, each time the alarm activates, alarm time will be counted as the actual amount of time taken by the Permittee to initiate corrective actions.

[A.A.C. R18-2-306(A)(3)(c) & (d) {40 CFR Part 64 - CAM}, R18-2-403(A)(1), and R18-2-406(A)(4)]

(11) If inspection of the Baghouse demonstrates that no corrective actions are necessary, no alarm time will be counted.

[A.A.C. R18-2-306(A)(3)(c) & (d) {40 CFR Part 64 - CAM}, R18-2-403(A)(1), and R18-2-406(A)(4)]

e. Each 6-month block period for which the Bag Leak Detection System alarm time, as determined in accordance with Conditions IV.D.7.d(9) through IV.D.7.d(11) above, exceeds the limit established in Condition IV.B.2.i of this Attachment shall be considered a period of excess emissions. [A.A.C. R18-2-306(A)(5)(b)]

f. The Permittee shall report excess emissions and deviations in accordance with Sections XII.A and XII.B, respectively, in Attachment "A" of this permit. [A.A.C. R18-2-306(A)(5)(b)]

8. Operations and Maintenance Plan

a. The Permittee shall prepare written operations and maintenance plans for Kiln 6 and the Clinker Cooler.
[A.A.C. R18-2-1101(B)(50) {40 CFR § 63.1350(a)}]

b. Each plan required by Condition IV.D.8.a above shall be submitted to the Director for review and approval using the appropriate permit revision mechanism in Title 18, Chapter 2, Article 3 of the Arizona Administrative Code. [A.A.C. R18-2-1101(B)(50) {40 CFR § 63.1350(a)}]

c. Each plan required by Condition IV.D.8.a above shall include procedures for proper operation and maintenance of the affected source and air pollution control devices in order to meet the emission limits and operating limits of Conditions IV.B.2.e, IV.B.2.f, IV.B.2.g, IV.B.2.h, IV.B.6.a, IV.B.7, and IV.B.8 of this Attachment.
[A.A.C. R18-2-1101(B)(50) {40 CFR § 63.1350(a)(1)}]

d. Each plan required by Condition IV.D.8.a above shall include procedures to be used during an inspection of the components of the combustion system of Kiln 6 at least once per year; and
[A.A.C. R18-2-1101(B)(50) {40 CFR § 63.1350(a)(3)}]

e. Failure to comply with any provision of the operations and maintenance plan approved by the Director in accordance with Condition IV.D.8.b above shall be a violation. [A.A.C. R18-2-1101(B)(50) {40 CFR § 63.1350(b)}]

9. Recordkeeping, Reporting, and Notification Requirements for HAP Emission Standards

a. The Permittee shall maintain the following records:
[A.A.C. R18-2-1101(B)(50) {40 CFR § 63.1355(b)}]

(1) All records as required by 40 CFR § 63.10(b)(2) and (b)(3).
[A.A.C. R18-2-1101(B)(50) {40 CFR § 63.1355(b)}]

(2) All documentation supporting initial notifications and notifications of compliance status under 40 CFR § 63.9.
[A.A.C. R18-2-1101(B)(50) {40 CFR § 63.1355(b)(1)}]

(3) All records of applicability determination, including supporting analyses. [A.A.C. R18-2-1101(B)(50) {40 CFR § 63.1355(b)(2)}]

(4) If the Permittee has been granted a waiver under 40 CFR § 63.8(f)(6), any information demonstrating whether the source is meeting the requirements for a waiver of recordkeeping or reporting requirements.
[A.A.C. R18-2-1101(B)(50) {40 CFR § 63.1355(b)(3)}]

b. The Permittee shall comply with the reporting requirements specified in 40 CFR § 63.10 as follows: [R18-2-1101(B)(50) {40 CFR § 63.1354(b)}]

(1) As required by 40 CFR § 63.10(d)(2), the Permittee shall report the results of performance tests as Part of the notification of compliance status. [R18-2-1101(B)(50) {40 CFR § 63.1354(b)(1)}]

(2) As required by 40 CFR § 63.10(d)(3), the Permittee shall report the opacity results from tests required by Conditions IV.E.4.a and IV.E.4.b of this Attachment.

[R18-2-1101(B)(50) {40 CFR § 63.1354(b)(2)}]

(3) As required by 40 CFR § 63.10(d)(5), if actions taken by a Permittee during a startup, shutdown, or malfunction (including actions taken to correct a malfunction) are consistent with the procedures specified in the Permittee's startup, shutdown, and malfunction plan specified in 40 CFR § 63.6(e)(3), the Permittee shall state such information in a semi-annual report. Reports shall only be required if a startup, shutdown, or malfunction occurred during the reporting period. The startup, shutdown, and malfunction report may be submitted simultaneously with the excess emissions and continuous monitoring system performance reports. [R18-2-1101(B)(50) {40 CFR § 63.1354(b)(4)}]

(4) Any time an action taken by the Permittee during a startup, shutdown, or malfunction (including actions taken to correct a malfunction) is not consistent with the procedures in the startup, shutdown, and malfunction plan, the Permittee shall make an immediate report of the actions taken for that event within 2 working days, by telephone call or facsimile (fax) transmission. The immediate report shall be followed by a letter, certified by the Permittee, explaining the circumstances of the event, the reasons for not following the startup, shutdown, and malfunction plan, and whether any excess emissions and/or parameter monitoring exceedances are believed to have occurred.

[R18-2-1101(B)(50) {40 CFR § 63.1354(b)(5)}]

(5) As required by 40 CFR § 63.10(e)(2), the Permittee shall submit a written report of the results of the performance evaluation for the continuous monitoring system required by 40 CFR § 63.8(e). The Permittee shall submit the report simultaneously with the results of the performance test.

[R18-2-1101(B)(50) {40 CFR § 63.1354(b)(6)}]

(6) As required by 40 CFR § 63.10(e)(2), when a COMS is used to determine opacity compliance during any performance test required under 40 CFR § 63.7 and described in 40 CFR § 63.6(d)(6), the Permittee shall report the results of the COMS performance evaluation conducted under 40 CFR § 63.8(e).

[R18-2-1101(B)(50) {40 CFR § 63.1354(b)(7)}]

(7) As required by 40 CFR § 63.10(e)(3), the Permittee shall submit an excess emissions and continuous monitoring system performance report for any event when the data provided by the continuous monitoring system indicate the source is not in compliance with the applicable emission limitation or operating parameter limit. [R18-2-1101(B)(50) {40 CFR § 63.1354(b)(8)}]

(8) The Permittee shall submit a summary report semiannually, along with the compliance certification, which contains the information specified in 40 CFR § 63.10(e)(3)(vi). In addition, the summary report shall include:

[R18-2-1101(B)(50) {40 CFR § 63.1354(b)(9)}]

(a) All exceedances of maximum baghouse inlet gas temperature limits specified in Conditions IV.B.7.b(1) and IV.B.7.b(2) of this Attachment;
[R18-2-1101(B)(50) {40 CFR § 63.1354(b)(9)(i)}]

(b) All failures to calibrate thermocouples and other temperature sensors as required under Condition IV.D.5.e of this Attachment;
[R18-2-1101(B)(50) {40 CFR § 63.1354(b)(9)(ii)}]

(c) The results of any combustion system component inspections conducted within the reporting period as required under Condition IV.D.5.g of this Attachment; and [R18-2-1101(B)(50) {40 CFR § 63.1354(b)(9)(iv)}]

(d) All failures to comply with any provision of the operation and maintenance plan required by Condition IV.D.8.a of this Attachment.
[R18-2-1101(B)(50) {40 CFR § 63.1354(b)(9)(v)}]

(9) If the total continuous monitoring system downtime for any continuous monitoring system is 10 percent or greater of the total operating time for the reporting period, the Permittee shall submit an excess emissions and continuous monitoring system performance report along with the summary report required by Condition IV.D.9.b(8) above.
[R18-2-1101(B)(50) {40 CFR § 63.1354(b)(10)}]

c. The Permittee shall comply with the notification requirements in 40 CFR § 63.9 as follows: [R18-2-1101(B)(50) {40 CFR § 63.1353(b)}]

(1) Notification of performance tests, as required by 40 CFR §§ 63.7 and 63.9(e). [R18-2-1101(B)(50) {40 CFR § 63.1353(b)(2)}]

(2) Notification of opacity and visible emission observations required by Condition IV.E.4.c in accordance with 40 CFR §§ 63.6(h)(5) and 63.9(f). [R18-2-1101(B)(50) {40 CFR § 63.1353(b)(3)}]

(3) Notification, as required by 40 CFR § 63.9(g), of the date that CEMS or COMS performance evaluation required by 40 CFR § 63.8(e) is scheduled to begin.
[R18-2-1101(B)(50) {40 CFR § 63.1353(b)(4)}]

(4) Notification of compliance status, as required by 40 CFR § 63.9(h). [R18-2-1101(B)(50) {40 CFR § 63.1353(b)(5)}]

d. The Permittee shall maintain files of all information (including all reports and notifications) required in a form suitable and readily available for inspection and review as required by 40 CFR § 63.10(b)(1). The files shall be retained for at least five years following the date of each occurrence, measurement, maintenance, corrective action, report, or record. At a minimum, the most recent two years of data shall be retained on site. The remaining three years of data may be retained off site. The files may be maintained on microfilm, on a computer, on floppy disks, on magnetic tape, or on microfiche.
[A.A.C. R18-2-1101(B)(50) {40 CFR § 63.1355(a)}]

10. Notification Requirements for Kiln 6 Project

a. On or before the date that this Section becomes effective, the Permittee shall submit written notification of the schedule for shutting down or modifying the emissions units covered by Section V of Attachment "C".

[A.A.C. R18-2-306.01, R18-2-403(A)(2)]

b. The notification required by Condition IV.D.10.a above shall include an updated PM netting analysis and an updated PM_{10} emission offset analysis for the Kiln 6 project. [A.A.C. R18-2-306.01, R18-2-403(A)(2)]

E. Testing Requirements

1. The Permittee shall perform initial and periodic performance tests in accordance with Conditions IV.E.2 through IV.E.6 below. Initial performance tests shall be performed within 180 days after initial startup of the affected emissions unit.

[A.A.C. R18-2-406(A)(4) and R18-2-1101(B)(1) {40 CFR § 63.7(a)}]

2. For each performance test required pursuant to Condition IV.E.1 above, the Permittee shall submit a test plan to the Director in accordance with Condition XVIII.D of Attachment "A".

[A.A.C. R18-2-312(B) and R18-2-1101(B)(50) {40 CFR § 63.1349(a)}]

3. Performance test results shall be documented in complete test reports that contain the information required by Conditions IV.E.3.a through IV.E.3.k below.

[A.A.C. R18-2-403(A)(1), R18-2-406(A)(4), R18-2-1101(B)(50) {40 CFR § 63.1349(a)}]

a. A brief description of the process and the air pollution control system;

[A.A.C. R18-2-403(A)(1), R18-2-406(A)(4), R18-2-1101(B)(50) {40 CFR § 63.1349(a)(1)}]

b. Sampling location description(s);

[A.A.C. R18-2-403(A)(1), R18-2-406(A)(4), R18-2-1101(B)(50) {40 CFR § 63.1349(a)(2)}]

c. A description of sampling and analytical procedures and any modifications to standard procedures;

[A.A.C. R18-2-403(A)(1), R18-2-406(A)(4), R18-2-1101(B)(50) {40 CFR § 63.1349(a)(3)}]

d. Test results;

[A.A.C. R18-2-406(A)(4), R18-2-1101(B)(50) {40 CFR § 63.1349(a)(4)}]

e. Quality assurance procedures and results;

[A.A.C. R18-2-403(A)(1), R18-2-406(A)(4), R18-2-1101(B)(50) {40 CFR § 63.1349(a)(5)}]

f. Records of operating conditions during the test, preparation of standards, and calibration procedures;

[A.A.C. R18-2-403(A)(1), R18-2-406(A)(4), R18-2-1101(B)(50) {40 CFR § 63.1349(a)(6)}]

g. Raw data sheets for field sampling and field and laboratory analyses;

[A.A.C. R18-2-403(A)(1), R18-2-406(A)(4), R18-2-1101(B)(50) {40 CFR § 63.1349(a)(7)}]

h. Documentation of calculations;

[A.A.C. R18-2-403(A)(1), R18-2-406(A)(4), R18-2-1101(B)(50) {40 CFR § 63.1349(a)(8)}]

i. All data recorded and used to establish parameters for compliance monitoring;

[A.A.C. R18-2-403(A)(1), R18-2-406(A)(4), R18-2-1101(B)(50) {40 CFR § 63.1349(a)(9)}]

j. Any other information required by the test method; and

[A.A.C. R18-2-403(A)(1), R18-2-406(A)(4), R18-2-1101(B)(50) {40 CFR § 63.1349(a)(10)}]

k. All other relevant information.

[A.A.C. R18-2-403(A)(1), R18-2-406(A)(4), R18-2-1101(B)(50) {40 CFR § 63.1349(a)}]

4. Test Methods and Procedures for Particulate Matter and Opacity of Visible Emissions

a. The Permittee shall demonstrate initial compliance with Condition IV.B.2.e of this Attachment using the test methods and procedures in Conditions IV.E.4.a(1) through IV.E.4.a(7) below.

[A.A.C. R18-2-1101(B)(50) {40 CFR § 63.1349(b)(1)}]

(1) The Permittee shall demonstrate initial compliance by conducting two separate performance tests: 1) while the Inline Raw Mill is under normal operating conditions, 2) while the Inline Raw Mill is not operating.

[A.A.C. R18-2-1101(B)(50) {40 CFR § 63.1349(b)(1)}]

(2) EPA Reference Method 5 in Appendix A to 40 CFR Part 60 shall be used to determine PM emissions.

[A.A.C. R18-2-1101(B)(50) {40 CFR § 63.1349(b)(1)(i)}]

(3) Each performance test shall consist of three separate runs under the conditions that exist when the affected source is operating at the representative performance conditions in accordance with 40 CFR § 63.7(e). [A.A.C. R18-2-1101(B)(50) {40 CFR § 63.1349(b)(1)(i)}]

(4) Each run shall be conducted for at least one hour, and the minimum sample volume shall be 30 dscf.

[R18-2-1101(B)(50) {40 CFR § 63.1349(b)(1)(i)}]

(5) The average of the three runs shall be used to determine compliance. [R18-2-1101(B)(50) {40 CFR § 63.1349(b)(1)(i)}]

(6) Suitable methods shall be used to determine the Rotary Kiln feed rate, except for fuels, for each run.

[R18-2-1101(B)(50) {40 CFR § 63.1349(b)(1)(ii)}]

(7) The emission rate, E, shall be computed for each run using the following equation:

$$E = \frac{C_s \times Q_{sd}}{P}$$

Where:

E = emission rate of PM, lb per ton of Kiln feed.

C_s = concentration of PM, lb/dscf.

Q_{sd} = volumetric flow rate of effluent gas, dscf/hr.

P = total Kiln feed (dry basis), tons/hr.

[A.A.C. R18-2-1101(B)(50) {40 CFR § 63.1349(b)(1)(iii)}]

b. The Permittee shall demonstrate initial compliance with Condition IV.B.2.f of this Attachment using the test methods and procedures in Conditions IV.E.4.b(1) through IV.E.4.b(6) below.

[A.A.C. R18-2-1101(B)(50) {40 CFR § 63.1349(b)(1)}]

(1) The performance test shall consist of three separate runs under the conditions that exist when the affected source is operating at the representative performance conditions in accordance with 40 CFR § 63.7(e). [A.A.C. R18-2-1101(B)(50) {40 CFR § 63.1349(b)(1)(i)}]

(2) EPA Reference Method 5 in Appendix A to 40 CFR Part 60 shall be used to determine PM emissions.

[A.A.C. R18-2-1101(B)(50) {40 CFR § 63.1349(b)(1)(i)}]

(3) Each run shall be conducted for at least one hour, and the minimum sample volume shall be 30 dscf.

[R18-2-1101(B)(50) {40 CFR § 63.1349(b)(1)(i)}]

(4) The average of the three runs shall be used to determine compliance. [R18-2-1101(B)(50) {40 CFR § 63.1349(b)(1)(i)}]

(5) Suitable methods shall be used to determine the Kiln feed rate, except for fuels, for each run.

[R18-2-1101(B)(50) {40 CFR § 63.1349(b)(1)(ii)}]

(6) The emission rate, E, shall be computed for each run using the following equation:

$$E = \frac{C_s \times Q_{sd}}{P}$$

Where:

E = emission rate of PM, lb per ton of Kiln feed.

C_s = concentration of PM, lb/dscf.

Q_{sd} = volumetric flow rate of effluent gas, dscf/hr.

P = total Kiln feed (dry basis), tons/hr.

[A.A.C. R18-2-1101(B)(50) {40 CFR § 63.1349(b)(1)(iii)}]

c. The opacity exhibited during the period of the EPA Reference Method 5 performance tests required by Conditions IV.E.4.a and IV.E.4.b above shall be determined through the use of the COMS required by Condition IV.D.2.a. The maximum six-minute average opacity shall be determined during each EPA Reference Method 5 test run and shall be used to demonstrate initial compliance with Conditions IV.B.2.g and IV.B.2.h.

[R18-2-1101(B)(50) {40 CFR § 63.1349(b)(1)(v)}]

d. The Permittee shall demonstrate initial compliance with Conditions IV.B.2.a through IV.B.2.d of this Attachment using the test methods and procedures in Conditions IV.E.4.d(1) through IV.E.4.d(6) below.

(1) The Permittee shall demonstrate initial compliance with Conditions IV.B.2.a and IV.B.2.c of this Attachment by conducting two separate performance tests as follows.

(a) One performance test shall be performed under the conditions that exist when Kiln 6 and the Inline Raw Mill are operating at the highest load or capacity level reasonably expected to occur.

[A.A.C. R18-2-403(A)(1), R-18-406(A)(4), and R-18-406(A)(5)]

(b) One performance test shall be performed under the conditions that exist when the Inline Raw Mill is not operating and Kiln 6 is operating at the highest load or capacity level reasonably expected to occur.

[A.A.C. R18-2-403(A)(1), R-18-406(A)(4), and R-18-406(A)(5)]

(2) The Permittee shall determine PM_{10} concentration as the sum of filterable PM_{10} determined in accordance with Condition IV.E.4.d(2)(a) below and condensable PM_{10} determined in accordance with Condition IV.E.4.d(2)(b) below:

(a) Either of the following test methods may be used to determine the filterable PM_{10} concentration:

(i) EPA Reference Method 5 in Appendix A to 40 CFR Part 60; or

(ii) EPA Reference Method 201a in Appendix M to 40 CFR Part 51.

(b) Either of the following test methods may be used to determine the condensable PM_{10} concentration:

(i) EPA Reference Method 202 in Appendix M to 40 CFR Part 51; or

(ii) EPA "Other Test Method Number 28 (OTM-28), - Dry Impinger Method for Determining Condensable Particulate Emissions from Stationary Sources".

[A.A.C. R18-2-403(A)(1), R-18-406(A)(4), and R-18-406(A)(5)]

(3) Each performance test shall consist of three separate runs.

[A.A.C. R18-2-403(A)(1), R-18-406(A)(4), and R-18-406(A)(5)]

(4) Each run shall be conducted for at least one hour, and the minimum sample volume shall be 30 dscf.

[A.A.C. R18-2-403(A)(1), R-18-406(A)(4), and R-18-406(A)(5)]

(5) The average of the three runs shall be used to determine compliance.

[A.A.C. R18-2-403(A)(1), R-18-406(A)(4), and R-18-406(A)(5)]

(6) Suitable methods shall be used to determine the Kiln 6 feed rate and clinker production rate, except for fuels, for each run.

[A.A.C. R18-2-403(A)(1), R-18-406(A)(4), and R-18-406(A)(5)]

e. If the Permittee plans to undertake a change in operations that may adversely affect compliance with Condition IV.B.2.e or IV.B.2.f of this Attachment, the Permittee must conduct a performance test as specified in Conditions IV.E.4.a and IV.E.4.b of this Attachment.

[R18-2-1101(B)(50) {40 CFR § 63.1349(e)(2)}]

f. The performance tests required by Condition IV.E.4.d of this Attachment shall be repeated at least annually.

[A.A.C. R-18-406(A)(4) and R-18-406(A)(5)]

5. Test Methods and Procedures for Dioxins/Furans Emissions

a. The Permittee shall demonstrate initial compliance with Condition IV.B.7.a of this Attachment using the test methods and procedures in Conditions IV.E.5.a(1) through IV.E.5.a(9) below.

[A.A.C. R18-2-1101(B)(50) {40 CFR § 63.1349(b)(3)}]

(1) The Permittee shall demonstrate initial compliance by conducting two separate performance tests: 1) while the Inline Raw Mill is under normal operating conditions, 2) while the Inline Raw Mill is not operating.

[A.A.C. R18-2-1101(B)(50) {40 CFR § 63.1349(b)(3)}]

(2) EPA Reference Method 23 in Appendix A to 40 CFR Part 60 shall be used to determine D/F emissions.

[A.A.C. R18-2-1101(B)(50) {40 CFR § 63.1349(b)(3)}]

(3) Each performance test shall consist of three separate runs; each run shall be conducted under the conditions that exist when the affected source is operating at the representative performance conditions in accordance with §63.7(e).

[A.A.C. R18-2-1101(B)(50) {40 CFR § 63.1349(b)(3)(i)}]

(4) The duration of each run shall be at least 3 hours, and the sample volume for each run shall be at least 2.5 dry standard cubic meters. [A.A.C. R18-2-1101(B)(50) {40 CFR § 63.1349(b)(3)(i)}]

(5) The concentration shall be determined for each run, and the arithmetic average of the concentrations measured for the three runs shall be calculated and used to determine compliance.

[A.A.C. R18-2-1101(B)(50) {40 CFR § 63.1349(b)(3)(i)}]

(6) The temperature at the inlet to Baghouse H5-GB must be continuously recorded during the period of the Method 23 test, and the continuous temperature record(s) must be included in the performance test report.

[A.A.C. R18-2-1101(B)(50) {40 CFR § 63.1349(b)(3)(ii)}]

(7) One-minute average temperatures must be calculated for each minute of each run of the test.

[A.A.C. R18-2-1101(B)(50) {40 CFR § 63.1349(b)(3)(iii)}]

(8) The run average temperature must be calculated for each run, and the average of the run average temperatures must be determined and included in the performance test report. The average of the run average temperatures will determine the applicable temperature limit in accordance with Condition IV.E.5.a(9). [R18-2-1101(B)(50) {40 CFR § 63.1349(b)(3)(iv)}]

(9) The temperature limits for Baghouse H5-GB in Conditions IV.B.7.b(1) and IV.B.7.b(2) of this Attachment are determined in accordance with IV.E.5.a(8) above. [R18-2-1101(B)(50) {40 CFR § 63.1344(b)}]

b. Performance tests required under Condition IV.E.5.a of this Attachment shall be repeated every 30 months. [R18-2-1101(B)(50) {40 CFR § 63.1349(d)}]

c. If the Permittee plans to undertake a change in operations that may adversely affect compliance with the D/F standard under Condition IV.B.7.a of this Attachment, the Permittee must conduct a performance test and establish new temperature limit(s) as specified in Conditions IV.E.5.a(1) through IV.E.5.a(8) above. [R18-2-1101(B)(50) {40 CFR § 63.1349(e)(1)}]

d. In preparation for and while conducting a performance test required in Condition IV.E.5.c, the Permittee may operate under the planned operational change conditions for a period not to exceed 360 hours, provided that Conditions IV.E.5.d(1) through (4) below are met. The source shall submit temperature and other monitoring data that are recorded during the pretest operations. [R18-2-1101(B)(50) {40 CFR § 63.1349(e)(3)}]

(1) The Permittee shall provide the Director a written notice at least 60 days prior to undertaking an operational change that may adversely affect compliance with Condition IV.B.7.a of this Attachment, or as soon as practicable where 60 days advance notice is not feasible. This notice shall include a description of the planned change, the permit condition that may be affected by the change, and a schedule for completion of the performance test required under Condition IV.E.5.c of this Attachment, including when the planned operational change period would begin. [R18-2-1101(B)(50) {40 CFR § 63.1349(e)(3)(i)}]

(2) The performance test results must be documented in a test report according to Condition IV.E.3 of this Attachment. [R18-2-1101(B)(50) {40 CFR § 63.1349(e)(3)(ii)}]

(3) A test plan must be made available to the Director prior to testing, if requested. [R18-2-1101(B)(50) {40 CFR § 63.1349(e)(3)(iii)}]

(4) The performance test must be conducted, and it must be completed within 360 hours after the planned operational change period begins. [R18-2-1101(B)(50) {40 CFR § 63.1349(e)(iv)}]

6. Test Methods and Procedures for Total Hydrocarbons Emissions

a. The Permittee shall demonstrate initial compliance with Condition IV.B.6.a of this Attachment using the test methods and procedures in

Conditions IV.E.6.b through IV.E.6.d of this Attachment.
[R18-2-1101(B)(50) {40 CFR § 63.1349(b)(4)}]

b. The Permittee shall demonstrate initial compliance by operating a CEMS in accordance with Performance Specification 8A in Appendix B to 40 CFR Part 60. [R18-2-1101(B)(50) {40 CFR § 63.1349(b)(4)}]

c. The Permittee shall demonstrate initial compliance by conducting two separate performance tests: 1) while the Inline Raw Mill is under normal operating conditions, 2) while the Inline Raw Mill is not operating.
[R18-2-1101(B)(50) {40 CFR § 63.1349(b)(4)}]

d. The duration of the performance test shall be three hours, and the average THC concentration (as calculated from the one-minute averages) during the three hour performance test shall be calculated.
[R18-2-1101(B)(50) {40 CFR § 63.1349(b)(4)}]

7. Test Methods and Procedures for Mercury Emissions

a. The Permittee shall demonstrate initial compliance with Condition IV.B.8 of this Attachment using the test methods and procedures in Conditions IV.E.7.b through IV.E.7.d below.
[R18-2-1101(B)(50) {40 CFR § 63.1349(b)(5)}]

b. The Permittee shall demonstrate initial compliance by using EPA Method 29 of 40 CFR Part 60. ASTM D6784-02, Standard Test Method for Elemental, Oxidized, Particle-Bound and Total Mercury Gas Generated from Coal-Fired Stationary Sources (Ontario Hydro Method), is an acceptable alternative to EPA Method 29 (portion for mercury only). [R18-2-1101(B)(50) {40 CFR § 63.1349(b)(5)}]

c. The Permittee shall demonstrate initial compliance by conducting two separate performance tests: 1) while the Inline Raw Mill is under normal operating conditions, 2) while the Inline Raw Mill is not operating.
[R18-2-1101(B)(50) {40 CFR § 63.1349(b)(5)}]

d. The Permittee shall record the hourly recycle rate of cement kiln dust during both test conditions and shall calculate an average hourly recycle rate for the three test runs for each test condition.
[R18-2-1101(B)(50) {40 CFR § 63.1349(b)(5)}]

F. Permit Shield

Compliance with the terms of this Section shall be deemed compliance with the following applicable requirement(s) in effect on the date of permit issuance: 40 CFR Part 63 Subpart LLL.

V. FINISH MILLS, STORAGE BINS, BAGGING SYSTEMS, BULK LOADING AND UNLOADING SYSTEMS, AND CONVEYING SYSTEM TRANSFER POINTS SUBJECT TO SUBPART LLL OF 40 CFR PART 63

The requirements of this Section shall apply and shall replace Sections VI of Attachment "C" beginning on the first date when any new or modified emissions unit listed in Condition V.A below becomes operational. Each new and modified unit listed in Condition V.A below shall be deemed operational on the first calendar day following installation or modification when its 24-

hour average production rate exceeds 90 percent of its nominal capacity, or on the 30th day following initial use for new equipment or modification for modified equipment, whichever is earlier.

List of Emission Units and Affected Sources

Emission Unit/Affected Source Name	Emission Unit/ Affected Source Description (Nominal Capacity)	Control Measure (Control Device ID Number)	Emission Point ID Number
Truck Unloading to Plant Iron Stockpile No. 1	Bulk Unloading System	n/a	n/a
Truck Unloading to Plant Iron Stockpile No. 2	Bulk Unloading System	n/a	n/a
Truck Unloading to Plant Iron Stockpile No. 3	Bulk Unloading System	Wind Screen	n/a
Rail Unloading of Alumina to Trucks	Bulk Unloading System	n/a	n/a
Truck Unloading to Plant Alumina Stockpile	Bulk Unloading System	n/a	n/a
Truck Unloading to Gypsum Stockpile	Bulk Unloading System	n/a	n/a
Truck Unloading to Plant High-Grade Limestone Stockpile	Bulk Unloading System	n/a	n/a
Truck Unloading to Low-Grade Limestone Stockpile	Bulk Unloading System	n/a	n/a
Truck Unloading to Horseshoe	Bulk Unloading System	n/a	n/a
Truck Unloading to Inert Material Storage	Bulk Unloading System	n/a	n/a
Loading of Trucks at Plant Iron Stockpile No. 1	Bulk Loading System	n/a	n/a
Loading of Trucks at Plant Iron Stockpile No. 3	Bulk Loading System	Wind Screen	n/a
Loading of Trucks at Plant Alumina Stockpile	Bulk Loading System	n/a	n/a
Loading of Kiln Bricks into Trucks	Bulk Loading System	n/a	n/a
Loading of Off-Spec Clinker into Trucks	Bulk Loading System	Enclosure	n/a
Loading of Plant Materials into Trucks	Bulk Loading System	n/a	n/a
Loading of D4 Metal Rejects into Trucks	Bulk Loading System	n/a	n/a
Transfer of D4 Metal Rejects from D4 Bin into Loader	Transfer Point	n/a	n/a
Transfer of D4 Metal Rejects from Loader to Horseshoe	Transfer Point	n/a	n/a
Transfer from Loader to D4-HOP	Transfer Point, 100 tons per hour	Water Spray	n/a
Discharge of D4-HOP to D4-BF1	Transfer Point, 100 tons per hour	n/a	n/a

Emission Unit/Affected Source Name	Emission Unit/ Affected Source Description (Nominal Capacity)	Control Measure (Control Device ID Number)	Emission Point ID Number
Discharge of D4-BF1 to D4-BE1	Transfer Point, 100 tons per hour	Dust Collector (D4-DC2)	D4-DC2
Discharge of D4-DR1 to D4-SB3	Transfer Point, 525 tons per hour	Dust Collector (D4-DC2)	D4-DC2
Discharge of D4-DR1 to D4-SB4	Transfer Point, 525 tons per hour	Dust Collector (D4-DC2)	D4-DC2
Discharge of D4-DR1 to D4-SB5	Transfer Point, 525 tons per hour	Dust Collector (D4-DC2)	D4-DC2
Discharge of D4-DR1 to D4-SB6	Transfer Point, 525 tons per hour	Dust Collector (D4-DC2)	D4-DC2
Discharge of D4-BE1 to D4-DR1	Transfer Point, 525 tons per hour	Dust Collector (D4-DC2)	D4-DC2
Discharge of D4-DC2 to D4-DR1	Transfer Point	Dust Collector (D4-DC2)	D4-DC2
Discharge of B5-BC4 to B6-BC1	Transfer Point, 600 tons per hour	n/a	n/a
Discharge of D4-VB1-SG to D4-BS1	Transfer Point, 525 tons per hour	Dust Collector (D4-DC1)	D4-DC1
Discharge of D4-VB2-SG to D4-BS2	Transfer Point, 525 tons per hour	Dust Collector (D4-DC1)	D4-DC1
Discharge of D4-BS1 to D4-BC1	Transfer Point, 460 tons per hour	Dust Collector (D4-DC1)	D4-DC1
Discharge of D4-BS2 to D4-BC1	Transfer Point, 460 tons per hour	Dust Collector (D4-DC1)	D4-DC1
Discharge of C2-BC7 to C2-BC11	Transfer Point, 155 tons per hour	Dust Collector (C2-DC3)	C2-DC3
Discharge of C2-BC7 to C2-BC12	Transfer Point, 525 tons per hour	Dust Collector (C2-DC3)	C2-DC3
Discharge of C2-BC11 to C2-SB10	Transfer Point, 155 tons per hour	Dust Collector (C2-DC3)	C2-DC3
Discharge of C2-BC12 to C2-SB9	Transfer Point, 525 tons per hour	Dust Collector (C2-DC3)	C2-DC3
Discharge of C2-BC7 to C2-SB6	Transfer Point, 525 tons per hour	Dust Collector (C2-DC3)	C2-DC3
Discharge of C2-BC7 to C2-SB7	Transfer Point, 525 tons per hour	Dust Collector (C2-DC3)	C2-DC3
Discharge of C2-SB9 to D4-BS7	Transfer Point, 460 tons per hour	Dust Collector (D4-DC1)	D4-DC1
Discharge of C2-SB10 to D4-BS8	Transfer Point, 460 tons per hour	Dust Collector (D4-DC1)	D4-DC1
Discharge of D4-BS7 to D4-BC2	Transfer Point, 525 tons per hour	Dust Collector (D4-DC1)	D4-DC1
Discharge of D4-BS8 to D4-BC3	Transfer Point, 525 tons per hour	Dust Collector (D4-DC1)	D4-DC1
Discharge of D4-BC2 to D4-BC1	Transfer Point, 525 tons per hour	Dust Collector (D4-DC1)	D4-DC1
Discharge of D4-BC3 to D4-BC1	Transfer Point, 525 tons per hour	Dust Collector (D4-DC1)	D4-DC1

Emission Unit/Affected Source Name	Emission Unit/ Affected Source Description (Nominal Capacity)	Control Measure (Control Device ID Number)	Emission Point ID Number
Discharge of D4-VB3 to D4-BS3	Transfer Point, 525 tons per hour	Dust Collector (D4-DC1)	D4-DC1
Discharge of D4-VB4 to D4-BS4	Transfer Point, 525 tons per hour	Dust Collector (D4-DC1)	D4-DC1
Discharge of D4-VB5 to D4-BS5	Transfer Point, 525 tons per hour	Dust Collector (D4-DC1)	D4-DC1
Discharge of D4-VB6 to D4-BS6	Transfer Point, 525 tons per hour	Dust Collector (D4-DC1)	D4-DC1
Discharge of D4-BS3 to D4-BC1	Transfer Point, 525 tons per hour	Dust Collector (D4-DC1)	D4-DC1
Discharge of D4-BS4 to D4-BC1	Transfer Point, 525 tons per hour	Dust Collector (D4-DC1)	D4-DC1
Discharge of D4-BS5 to D4-BC1	Transfer Point, 525 tons per hour	Dust Collector (D4-DC1)	D4-DC1
Discharge of D4-BS6 to D4-BC1	Transfer Point, 525 tons per hour	Dust Collector (D4-DC1)	D4-DC1
Discharge of D4-DC1 to D4-BC1	Transfer Point	Dust Collector (D4-DC1)	D4-DC1
Discharge of D4-AS3 to HS-1	Transfer Point, 525 tons per hour	Dust Collector (F2-DC1)	F2-DC1
Discharge of F2-AS3 to F3-SB1	Transfer Point, 460 tons per hour	Dust Collector (F3-DC1)	F3-DC1
Discharge of F2-AS3 to F3-SB2	Transfer Point, 460 tons per hour	Dust Collector (F3-DC2)	F3-DC2
Discharge of F3-AS6 to H4-SB-KS	Transfer Point, 460 tons per hour	Dust Collector (H4-DC1)	H4-DC1
Discharge of D4-AS5 to F4-HS	Transfer Point, 525 tons per hour	Dust Collector (F4-DC1)	F4-DC1
Discharge of H4-FP1 to F4-HS	Transfer Point, 460 tons per hour	Dust Collector (F4-DC1)	F4-DC1
Discharge of H5-FP1 to F4-HS	Transfer Point, 300 tons per hour	Dust Collector (F4-DC1)	F4-DC1
Discharge of F4-DC1 to F4-HS	Transfer Point	Dust Collector (F4-DC1)	F4-DC1
Discharge of F5-AL to F4-HS	Transfer Point, 464 tons per hour	Dust Collector (F4-DC1)	F4-DC1
Discharge of H5-FP1 to F5-A1	Transfer Point, 300 tons per hour	Dust Collector (F5-DC1)	F5-DC1
Discharge of H5-BE1 to H5-SB1	Transfer Point, 300 tons per hour	Dust Collector (H5-DC1)	H5-DC1
Overhead Crane Building	Storage Bin	Dust Collector (RS-DC1)	RS-DC1
Discharge from H3-DC1-SC to H3-SB3	Transfer Point	Dust Collector (H3-DC2)	H3-DC2
Discharge of F5-AL to H4-A	Transfer Point, 464 tons per hour	Dust Collector (H4-DC2)	H4-DC2
Discharge of H2-HXC to H2-PF1	Transfer Point, 300 tons per hour	Dust Collector (H2-DC1)	H2-DC1
Discharge of H3-CC1 to H2-PF1	Transfer Point, 40 tons per hour	Dust Collector (H2-DC1)	H2-DC1

Emission Unit/Affected Source Name	Emission Unit/ Affected Source Description (Nominal Capacity)	Control Measure (Control Device ID Number)	Emission Point ID Number
Discharge of H2-QC to H2-PF1	Transfer Point, 300 tons per hour	Dust Collector (H2-GB)	H2-GB
Discharge of C2-VF1 to C2-BC8	Transfer Point, 155 tons per hour	Dust Collector (C2-DC14)	C2-DC14
Discharge of C2-DC14 to C2-BC8	Transfer Point	Dust Collector (C2-DC14)	C2-DC14
Discharge of C2-BC8 to C2-BC9	Transfer Point, 155 tons per hour	Dust Collector (C2-DC4)	C2-DC4
Discharge of C2-DC4 to C2-BC9	Transfer Point	Dust Collector (C2-DC4)	C2-DC4
Discharge of C2-BC9 to C2-BC10	Transfer Point, 155 tons per hour	Dust Collector (C2-DC11)	C2-DC11
Discharge of C2-BC9 to C2-BC5	Transfer Point, 155 tons per hour	Dust Collector (C2-DC2)	C2-DC2
Discharge of C2-DC2 to C2-BC5	Transfer Point	Dust Collector (C2-DC2)	C2-DC2
Discharge of C2-DC13 to B8-BC1A	Transfer Point	Dust Collector (C2-DC13)	C2-DC13
Discharge of C2-BC5 to C2-BC6	Transfer Point, 155 tons per hour	Dust Collector (C2-DC12)	C2-DC12
Discharge of C2-BC6 to C2-SB2	Transfer Point, 155 tons per hour	Dust Collector (C2-DC6)	C2-DC6
Discharge of C2-BC5 to C2-SB4	Transfer Point, 155 tons per hour	Dust Collector (C2-DC8)	C2-DC8
Discharge of C2-BC5 to C2-BC6A	Transfer Point, 155 tons per hour	Dust Collector (C2-DC12)	C2-DC12
Discharge of C2-BC6A to C2-SB6	Transfer Point, 155 tons per hour	Dust Collector (C2-DC10)	C2-DC10
Discharge of C2-SC1 to C2-BC10	Transfer Point, 155 tons per hour	Dust Collectors (C2-DC2 & C2-DC11)	C2-DC2 & C2-DC11
Discharge of C2-DC12 to C2-BC10	Transfer Point	Dust Collector (C2-DC12)	C2-DC12
Discharge of C2-BC4 to C2-BC5	Transfer Point, 155 tons per hour	Dust Collector (C2-DC13)	C2-DC13
Discharge of C2-BC4 to B8-BC1A	Transfer Point, 500 tons per hour	Dust Collector (C2-DC13)	C2-DC13
Discharge of C2-BC10 to C2-BC11A	Transfer Point, 155 tons per hour	Dust Collector (C2-DC12)	C2-DC12
Discharge of C2-BC10 to C2-BC11	Transfer Point, 155 tons per hour	Dust Collector (C2-DC12)	C2-DC12
Discharge of C2-BC11A to C2-SB5	Transfer Point, 155 tons per hour	Dust Collector (C2-DC9)	C2-DC9
Discharge of C2-BC10 to C2-SB3	Transfer Point, 155 tons per hour	Dust Collector (C2-DC7)	C2-DC7
Discharge of C2-BC11 to C2-SB1	Transfer Point, 155 tons per hour	Dust Collector (C2-DC5)	C2-DC5
Discharge of D2-SB2 to D2-BS2	Transfer Point, 155 tons per hour	Dust Collector (D2-DC1)	D2-DC1

Emission Unit/Affected Source Name	Emission Unit/ Affected Source Description (Nominal Capacity)	Control Measure (Control Device ID Number)	Emission Point ID Number
Discharge of D2-BS2 to D2-BC1	Transfer Point, 155 tons per hour	Dust Collector (D2-DC1)	D2-DC1
Discharge of D2-SB4 to D2-BS4	Transfer Point, 155 tons per hour	Dust Collector (D2-DC1)	D2-DC1
Discharge of D2-BS4 to D2-BC1	Transfer Point, 155 tons per hour	Dust Collector (D2-DC1)	D2-DC1
Discharge of D2-SB6 to D2-BS6	Transfer Point, 155 tons per hour	Dust Collector (D2-DC1)	D2-DC1
Discharge of D2-BS6 to D2-BC1	Transfer Point, 155 tons per hour	Dust Collector (D2-DC1)	D2-DC1
Discharge of D2-SB5 to D2-BS5	Transfer Point, 155 tons per hour	Dust Collector (D2-DC1)	D2-DC1
Discharge of D2-BS5 to D2-BC1	Transfer Point, 155 tons per hour	Dust Collector (D2-DC1)	D2-DC1
Discharge of D2-SB3 to D2-BS3	Transfer Point, 155 tons per hour	Dust Collector (D2-DC1)	D2-DC1
Discharge of D2-BS3 to D2-BS1	Transfer Point, 155 tons per hour	Dust Collector (D2-DC1)	D2-DC1
Discharge of D2-SB1 to D2-BS1	Transfer Point, 155 tons per hour	Dust Collector (D2-DC1)	D2-DC1
Discharge of D2-BS1 to D2-BC1	Transfer Point, 155 tons per hour	Dust Collector (D2-DC1)	D2-DC1
Discharge of D2-BC1 to D2-BC2	Transfer Point, 155 tons per hour	Dust Collector (D2-DC1)	D2-DC1
Discharge of D2-DC1 to D2-BC2	Transfer Point	Dust Collector (D2-DC1)	D2-DC1
Discharge of D2-BC2 to D2-BC6	Transfer Point, 155 tons per hour	Dust Collector (D2-DC3)	D2-DC3
Discharge of D2-DC3 to D2-BC6	Transfer Point	Dust Collector (D2-DC3)	D2-DC3
Discharge of H2-PF1 to H2-SB1	Transfer Point	Dust Collector (H2-DC3)	H2-DC3
Discharge of H2-PF1 to H2-PF2	Transfer Point	Dust Collector (H2-DC3)	H2-DC3
Discharge of H2-DC3 to H2-PF1	Transfer Point	Dust Collector (H2-DC3)	H2-DC3
Discharge of H2-PF2 to H2-PF3	Transfer Point	Dust Collector (J2-SD1-DC1)	J2-SD1-DC1
Clinker Dome J2-SD1	Storage Bin	Dust Collector (J2-SD1-DC1)	J2-SD1-DC1
Clinker Dome J2-SD2	Storage Bin	Dust Collector (J2-SD2-DC1)	J2-SD2-DC1
Discharge of J3-SD1-VF1 to J3-BC1	Transfer Point	Dust Collector (J3-DC1)	J3-DC1
Discharge of J3-SD1-VF2 to J3-BC1	Transfer Point	Dust Collector (J3-DC1)	J3-DC1
Discharge of J3-SD1-VF3 to J3-BC1	Transfer Point	Dust Collector (J3-DC1)	J3-DC1
Discharge of J3-SD1-VF4 to J3-BC1	Transfer Point	Dust Collector (J3-DC1)	J3-DC1

Emission Unit/Affected Source Name	Emission Unit/ Affected Source Description (Nominal Capacity)	Control Measure (Control Device ID Number)	Emission Point ID Number
Discharge of J3-SD1-VF5 to J3-BC1	Transfer Point	Dust Collector (J3-DC1)	J3-DC1
Discharge of J3-DC1 to J3-BC1	Transfer Point	Dust Collector (J3-DC1)	J3-DC1
Discharge of J3-SD2-VF1 to J3-BC1	Transfer Point	Dust Collector (J3-DC2)	J3-DC2
Discharge of J3-SD2-VF2 to J3-BC1	Transfer Point	Dust Collector (J3-DC2)	J3-DC2
Discharge of J3-SD2-VF3 to J3-BC1	Transfer Point	Dust Collector (J3-DC2)	J3-DC2
Discharge of J3-SD2-VF4 to J3-BC1	Transfer Point	Dust Collector (J3-DC2)	J3-DC2
Discharge of J3-SD2-VF5 to J3-BC1	Transfer Point	Dust Collector (J3-DC2)	J3-DC2
Discharge of J3-DC2 to J3-BC1	Transfer Point	Dust Collector (J3-DC2)	J3-DC2
Discharge of J3-BC1 to J3-BC2	Transfer Point	Dust Collector (J3-DC3)	J3-DC3
Discharge of J3-DC3 to J3-BC1	Transfer Point	Dust Collector (J3-DC3)	J3-DC3
Discharge of J3-BC2 to J3-BC3	Transfer Point	Dust Collector (J3-DC4)	J3-DC4
Discharge of JS-DC4 to J3-BC2	Transfer Point	Dust Collector (J3-DC4)	J3-DC4
Discharge of J3-BC3 to J3-BC4	Transfer Point	Dust Collector (J3-DC5)	J3-DC5
Clinker Storage Building	Storage Bin	Dust Collector (RS-DC1)	RS-DC1
Discharge of H2-DC2-SC1 to D3-1-BC1	Transfer Point, 150 tons per hour	Dust Collector (H2-DC2)	H2-DC2
Discharge of CM7-BS1-VF to CM7-RP1	Transfer Point, 69 tons per hour	Dust Collector (CM7-DC2)	CM7-DC2
Discharge of CM7-BS1-VF to CM7-RP2	Transfer Point, 69 tons per hour	Dust Collector (CM7-DC2)	CM7-DC2
Roll Crusher CM7-RP1	Finish Mill, 69 tons per hour	Dust Collector (CM7-DC2)	CM7-DC2
Roll Crusher CM7-RP2	Finish Mill, 69 tons per hour	Dust Collector (CM7-DC2)	CM7-DC2
Discharge of CM7-RP1 to CM7-BS1	Transfer Point, 69 tons per hour	Dust Collector (CM7-DC2)	CM7-DC2
Discharge of CM7-RP2 to CM7-BS1	Transfer Point, 69 tons per hour	Dust Collector (CM7-DC2)	CM7-DC2
Discharge of CM7 Gypsum Bin to CM7-BS2	Transfer Point, 69 tons per hour	Dust Collector (CM7-DC2)	CM7-DC2
Discharge of CM7 Limestone Bin to CM7-BS3	Transfer Point, 69 tons per hour	Dust Collector (CM7-DC2)	CM7-DC2
Discharge of CM7-BS1 to CM7-M	Transfer Point, 69 tons per hour	Dust Collector (CM7-DC1)	CM7-DC1
Discharge of CM7-BS2 to CM7-BC1	Transfer Point, 69 tons per hour	Dust Collector (CM7-DC2)	CM7-DC2

Emission Unit/Affected Source Name	Emission Unit/ Affected Source Description (Nominal Capacity)	Control Measure (Control Device ID Number)	Emission Point ID Number
Discharge of CM7-BC3 to CM7-BC1	Transfer Point, 69 tons per hour	Dust Collector (CM7-DC2)	CM7-DC2
Discharge of CM7-BC1 to CM7-M	Transfer Point, 69 tons per hour	Dust Collector (CM7-DC1)	CM7-DC1
Discharge of CM7-AS7 to CM7-M	Transfer Point, 69 tons per hour	Dust Collector (CM7-DC1)	CM7-DC1
Discharge of CM7-DC2 to CM7-M	Transfer Point	Dust Collector (CM7-DC1)	CM7-DC1
Finish Mill CM7-M	Finish Mill, 69 tons per hour	Dust Collectors (CM7-DC2 & CM7-DC3)	CM7-DC2 & CM7-DC3
Discharge of D2-1-AS1 to D2-FP1	Transfer Point, 155 tons per hour	Dust Collector (D2-DC4)	D2-DC4
Discharge of D2-BC6 to D2-1-BC1	Transfer Point, 155 tons per hour	Dust Collector (D2-1-DC1)	D2-1-DC1
Discharge of D2-1-BC1 to D2-1-M	Transfer Point, 155 tons per hour	Dust Collector (D2-1-DC1)	D2-1-DC1
Finish Mill D2-1-M	Finish Mill, 155 tons per hour	Dust Collector (D2-1-DC1)	D2-1-DC1
Discharge of H2-DC2-SC1 to D3-1-BC1	Transfer Point, 150 tons per hour	Dust Collector (D3-1-DC3)	D3-1-DC3
Discharge of CLINKER BIN to D3-1-BS1	Transfer Point, 150 tons per hour	Dust Collector (D3-1-DC3)	D3-1-DC3
Discharge of D3-1-BS1 to D3-1-BC1	Transfer Point, 150 tons per hour	Dust Collector (D3-1-DC3)	D3-1-DC3
Discharge of D3-1-VB1 to D3-1-BS2	Transfer Point, 150 tons per hour	Dust Collector (D3-1-DC3)	D3-1-DC3
Discharge of D3-1-BS2 to D3-1-BC1	Transfer Point, 150 tons per hour	Dust Collector (D3-1-DC3)	D3-1-DC3
Discharge of D3-1-BC1 to D3-1-BC2	Transfer Point, 150 tons per hour	Dust Collector (D3-1-DC3)	D3-1-DC3
Discharge of D3-1-VB to D3-1-BC2	Transfer Point, 150 tons per hour	Dust Collector (D3-1-DC3)	D3-1-DC3
Discharge of D3-1-BE1 to D3-1-BC3	Transfer Point, 150 tons per hour	Dust Collector (D3-1-DC3)	D3-1-DC3
Discharge of D3-1-BC3 to D3-1-BC4	Transfer Point, 150 tons per hour	Dust Collector (D3-1-DC3)	D3-1-DC3
Discharge of D3-1-BC3-SC to D3-1-BC4	Transfer Point, 150 tons per hour	Dust Collector (D3-1-DC3)	D3-1-DC3
Discharge of D3-1-BC4 to D3-1-HRP	Transfer Point, 150 tons per hour	Dust Collectors (D3-1-DC1 & D3-1-DC3)	D3-1-DC1 & D3-1-DC3
Discharge of D3-1-BC4 to D3-1-BE5	Transfer Point, 150 tons per hour	Dust Collector (D3-1-DC3)	D3-1-DC3
Discharge of D3-1-BC4-SC to D3-1-BE5	Transfer Point, 150 tons per hour	Dust Collector (D3-1-DC3)	D3-1-DC3
Finish Mill D3-1-M	Finish Mill, 150 tons per hour	Dust Collectors (D3-1-DC1 & D3-1-DC2)	D3-1-DC1 & D3-1-DC2
Roll Press D3-1-HRP1	Finish Mill, 150 tons per hour	Dust Collector (D3-1-DC1)	D3-1-DC1

Emission Unit/Affected Source Name	Emission Unit/ Affected Source Description (Nominal Capacity)	Control Measure (Control Device ID Number)	Emission Point ID Number
Roll Press D3-1-HRP2	Finish Mill, 150 tons per hour	Dust Collector (D3-1-DC1)	D3-1-DC1
Discharge of D5-SB1 to D5-WF1	Transfer Point, 160 tons per hour	Dust Collector (D5-DC1)	D5-DC1
Discharge of D5-WF1 to D5-BC1	Transfer Point, 160 tons per hour	Dust Collector (D5-DC1)	D5-DC1
Discharge of D5-SB2 to D5-WF2	Transfer Point, 160 tons per hour	Dust Collector (D5-DC1)	D5-DC1
Discharge of D5-WF2 to D5-BC1	Transfer Point, 160 tons per hour	Dust Collector (D5-DC1)	D5-DC1
Discharge of D5-SB3 to D5-WF3	Transfer Point, 160 tons per hour	Dust Collector (D5-DC1)	D5-DC1
Discharge of D5-WF3 to D5-BC1	Transfer Point, 160 tons per hour	Dust Collector (D5-DC1)	D5-DC1
Discharge of D5-DC1 to D5-BC1	Transfer Point	Dust Collector (D5-DC1)	D5-DC1
Discharge of D5-BC1 to D5-BE1	Transfer Point, 160 tons per hour	Dust Collector (D5-DC1)	D5-DC1
Discharge of D5-BE1 to D5-BC2	Transfer Point, 160 tons per hour	Dust Collector (D5-DC2)	D5-DC2
Discharge of D5-BC2 to D5-SB5	Transfer Point, 160 tons per hour	Dust Collector (D5-DC2)	D5-DC2
Discharge of D5-DC2 to D5-SB4	Transfer Point	Dust Collector (D5-DC2)	D5-DC2
Discharge of D5-SB1 to D5-BC3	Transfer Point, 160 tons per hour	Dust Collector (D5-DC2)	D5-DC2
Discharge of D5-FM to D5-FM-VB	Transfer Point, 160 tons per hour	Dust Collector (D5-PC)	D5-PC
OK-4 Roller Mill D5-FM with Air Heater D5-HTR	Finish Mill, 160 tons per hour	Dust Collector (D5-PC)	D5-PC
Discharge of D5-FM-VB to D5-BC4	Transfer Point, 160 tons per hour	Dust Collector (D5-DC1)	D5-DC1
Discharge of D5-BC4 to D5-BE1	Transfer Point, 160 tons per hour	Dust Collector (D5-DC1)	D5-DC1
Discharge of Airslide to CS-SB1	Transfer Point	Dust Collector (CM-DC12)	CM-DC12
Discharge of Airslide to CS-SB2	Transfer Point	Dust Collector (CM-DC12)	CM-DC12
Discharge of Airslide to CS-SB3	Transfer Point	Dust Collector (CM-DC12)	CM-DC12
Discharge of Airslide to CS-SB4	Transfer Point	Dust Collectors (CM-DC14 & CM-DC10)	CM-DC14 & CM-DC10
Discharge of Airslide to CS-SB5	Transfer Point	Dust Collectors (CM-DC14 & CM-DC10)	CM-DC14 & CM-DC10
Discharge of Airslide to CS-SB6	Transfer Point	Dust Collectors (CM-DC14 & CM-DC10)	CM-DC14 & CM-DC10
Discharge of Airslide to CS-SB7	Transfer Point	Dust Collector (CM-DC11)	CM-DC11

Emission Unit/Affected Source Name	Emission Unit/ Affected Source Description (Nominal Capacity)	Control Measure (Control Device ID Number)	Emission Point ID Number
Discharge of Airslide to CS-SB8	Transfer Point	Dust Collector (CM-DC11)	CM-DC11
Discharge of Airslide to CS-SB9	Transfer Point	Dust Collector (CM-DC11)	CM-DC11
Discharge of Airslide to CS-SB10	Transfer Point	Dust Collectors (CM-DC15 & CM-DC11)	CM-DC15 & CM-DC11
Discharge of Airslide to CS-SB11	Transfer Point	Dust Collectors (CM-DC15 & CM-DC10)	CM-DC15 & CM-DC10
Discharge of Airslide to CS-SB12	Transfer Point	Dust Collectors (CM-DC15 & CM-DC10)	CM-DC15 & CM-DC10
Discharge of Airslide to CS-SB13	Transfer Point	Dust Collectors (CM-DC15 & CM-DC9)	CM-DC15 & CM-DC9
Discharge of Airslide to CS-SB14	Transfer Point	Dust Collectors (CM-DC15 & CM-DC9)	CM-DC15 & CM-DC9
Discharge of Airslide to CS-SB15	Transfer Point	Dust Collectors (CM-DC15 & CM-DC9)	CM-DC15 & CM-DC9
Discharge of Airslide to CS-SB16	Transfer Point	Dust Collectors (CM-DC14 & CM-DC9)	CM-DC14 & CM-DC9
Discharge of Airslide to CS-SB17	Transfer Point	Dust Collectors (CM-DC14 & CM-DC9)	CM-DC14 & CM-DC9
Discharge of Airslide to CS-SB18	Transfer Point	Dust Collectors (CM-DC14 & CM-DC9)	CM-DC14 & CM-DC9
Discharge of Airslide to CS-SB19	Transfer Point	Dust Collectors (CM-DC8, CM-DC16 & CM-DC17)	CM-DC8, CM-DC16 & CM-DC17
Discharge of Airslide to CS-SB20	Transfer Point	Dust Collectors (CM-DC8, CM-DC16 & CM-DC17)	CM-DC8, CM-DC16 & CM-DC17
Discharge of Airslide to CS-SB21	Transfer Point	Dust Collectors (CM-DC8, CM-DC16 & CM-DC17)	CM-DC8, CM-DC16 & CM-DC17
Discharge of Airslide to CS-SB22	Transfer Point	Dust Collectors (CM-DC8, CM-DC16 & CM-DC17)	CM-DC8, CM-DC16 & CM-DC17
Discharge of Airslide to CS-SB23	Transfer Point	Dust Collectors (CM-DC8, CM-DC16 & CM-DC17)	CM-DC8, CM-DC16 & CM-DC17
Discharge of CS-SB1 to PH-SC1	Transfer Point, 276 tons per hour	Dust Collector (PH-DC1)	PH-DC1
Discharge of CS-SB2 to PH-SC1	Transfer Point, 276 tons per hour	Dust Collector (PH-DC1)	PH-DC1
Discharge of CS-SB3 to PH-SC1	Transfer Point, 276 tons per hour	Dust Collector (PH-DC1)	PH-DC1
Discharge of CS-SB4 to PH-SC1	Transfer Point, 276 tons per hour	Dust Collector (PH-DC1)	PH-DC1
Discharge of CS-SB5 to BL-SC2	Transfer Point, 276 tons per hour	Dust Collector (BL-DC1)	BL-DC1
Discharge of CS-SB6 to BL-SC2	Transfer Point, 276 tons per hour	Dust Collector (BL-DC1)	BL-DC1

Emission Unit/Affected Source Name	Emission Unit/ Affected Source Description (Nominal Capacity)	Control Measure (Control Device ID Number)	Emission Point ID Number
Discharge of CS-SB16 to BL-SC2	Transfer Point, 276 tons per hour	Dust Collector (BL-DC1)	BL-DC1
Discharge of CS-SB17 to BL-SC2	Transfer Point, 276 tons per hour	Dust Collector (BL-DC1)	BL-DC1
Discharge of CS-SB18 to BL-SC2	Transfer Point, 276 tons per hour	Dust Collector (BL-DC1)	BL-DC1
Discharge of CS-SB7 to PH-SC3	Transfer Point, 276 tons per hour	Dust Collector (PH-DC2)	PH-DC2
Discharge of CS-SB8 to PH-SC3	Transfer Point, 276 tons per hour	Dust Collector (PH-DC2)	PH-DC2
Discharge of CS-SB9 to PH-SC3	Transfer Point, 276 tons per hour	Dust Collector (PH-DC2)	PH-DC2
Discharge of CS-SB10 to PH-SC3	Transfer Point, 276 tons per hour	Dust Collector (PH-DC2)	PH-DC2
Discharge of CS-SB11 to BL-SC3	Transfer Point, 276 tons per hour	Dust Collector (BL-DC2)	BL-DC2
Discharge of CS-SB12 to BL-SC3	Transfer Point, 276 tons per hour	Dust Collector (BL-DC2)	BL-DC2
Discharge of CS-SB13 to BL-SC3	Transfer Point, 276 tons per hour	Dust Collector (BL-DC2)	BL-DC2
Discharge of CS-SB14 to BL-SC3	Transfer Point, 276 tons per hour	Dust Collector (BL-DC2)	BL-DC2
Discharge of CS-SB15 to BL-SC3	Transfer Point, 276 tons per hour	Dust Collector (BL-DC2)	BL-DC2
Discharge of CS-SB19 to PH-SC9	Transfer Point, 276 tons per hour	Dust Collector (PH-DC3)	PH-DC3
Discharge of CS-SB20 to PH-SC9	Transfer Point, 276 tons per hour	Dust Collector (PH-DC3)	PH-DC3
Discharge of CS-SB21 to PH-SC9	Transfer Point, 276 tons per hour	Dust Collector (PH-DC3)	PH-DC3
Discharge of CS-SB22 to PH-SC9	Transfer Point, 276 tons per hour	Dust Collector (PH-DC3)	PH-DC3
Discharge of CS-SB23 to PH-SC9	Transfer Point, 276 tons per hour	Dust Collector (PH-DC3)	PH-DC3
Discharge of CS-SB19 to BL-SC1A	Transfer Point, 276 tons per hour	Dust Collectors (BL-DC3 & BL-DC4)	BL-DC3 & BL-DC4
Discharge of CS-SB20 to BL-SC1A	Transfer Point, 276 tons per hour	Dust Collectors (BL-DC3 & BL-DC4)	BL-DC3 & BL-DC4
Discharge of CS-SB21 to BL-SC1A	Transfer Point, 276 tons per hour	Dust Collectors (BL-DC3 & BL-DC4)	BL-DC3 & BL-DC4
Discharge of CS-SB22 to BL-SC1A	Transfer Point, 276 tons per hour	Dust Collectors (BL-DC3 & BL-DC4)	BL-DC3 & BL-DC4
Discharge of CS-SB23 to BL-SC1B	Transfer Point, 276 tons per hour	Dust Collectors (BL-DC3 & BL-DC4)	BL-DC3 & BL-DC4
Discharge of BL-SC6 to BL-SB1	Transfer Point, 276 tons per hour	Dust Collector (BL-DC7)	BL-DC7
Discharge of BL-SC6 to BL-SB2	Transfer Point, 276 tons per hour	Dust Collector (BL-DC7)	BL-DC7

Emission Unit/Affected Source Name	Emission Unit/ Affected Source Description (Nominal Capacity)	Control Measure (Control Device ID Number)	Emission Point ID Number
Discharge of BL-SC6 to BL-SB3	Transfer Point, 276 tons per hour	Dust Collector (BL-DC7)	BL-DC7
Discharge of BL-SC6 to BL-SB4	Transfer Point, 276 tons per hour	Dust Collector (BL-DC7)	BL-DC7
Discharge of BL-SC7 to BL-SB1	Transfer Point, 276 tons per hour	Dust Collector (BL-DC7)	BL-DC7
Discharge of BL-SC7 to BL-SB2	Transfer Point, 276 tons per hour	Dust Collector (BL-DC7)	BL-DC7
Discharge of BL-SC7 to BL-SB3	Transfer Point, 276 tons per hour	Dust Collector (BL-DC7)	BL-DC7
Discharge of BL-SC7 to BL-SB4	Transfer Point, 276 tons per hour	Dust Collector (BL-DC7)	BL-DC7
Discharge of BL-BE3 to BL-SB5	Transfer Point, 450 tons per hour	Dust Collector (BL-SB5-DC1)	BL-SB5-DC1
Discharge of Pneumatic Line to BL-SB5	Transfer Point	Dust Collector (BL-SB5-DC1)	BL-SB5-DC1
Discharge of BL-SB3-SC to Rail Cars	Bulk Loading System, 276 tons per hour	Dust Collector (BL-DC5)	BL-DC5
Discharge of BL-AS2A to Trucks	Bulk Loading System, 276 tons per hour	Dust Collector (BL-DC6)	BL-DC6
Discharge of BL-AS2B to Trucks	Bulk Loading System, 276 tons per hour	Dust Collector (BL-DC6)	BL-DC6
Discharge of BL-SB5-AS1 to Trucks	Bulk Loading System, 276 tons per hour	Dust Collector (BL-SB5-DC2)	BL-SB5-DC2
Discharge of Pneumatic Line to C2-SB24	Transfer Point	Dust Collector (CM-DC18)	CM-DC18
Discharge of Pneumatic Line to C2-SB25	Transfer Point	Dust Collector (CM-DC18)	CM-DC18
Discharge of Pneumatic Line to C2-SB26	Transfer Point	Dust Collector (CM-DC18)	CM-DC18
Discharge of Pneumatic Line to C2-SB24	Transfer Point	Dust Collector (CM-DC18)	CM-DC18
Discharge of Pneumatic Line to C2-SB25	Transfer Point	Dust Collector (CM-DC18)	CM-DC18
Discharge of Pneumatic Line to C2-SB26	Transfer Point	Dust Collector (CM-DC18)	CM-DC18
Discharge of Pneumatic Line to C2-SB24	Transfer Point	Dust Collector (CM-DC18)	CM-DC18
Discharge of Pneumatic Line to C2-SB25	Transfer Point	Dust Collector (CM-DC18)	CM-DC18
Discharge of Pneumatic Line to C2-SB26	Transfer Point	Dust Collector (CM-DC18)	CM-DC18
Discharge of BL-SC8 to BL-SC3	Transfer Point, 276 tons per hour	Dust Collector (BL-DC8)	BL-DC8
Discharge of BL-SC8 to BL-SC2	Transfer Point, 276 tons per hour	Dust Collector (BL-DC8)	BL-DC8
Discharge of BL-DC8 to BL-SC3	Transfer Point	Dust Collector (BL-DC8)	BL-DC8

Emission Unit/Affected Source Name	Emission Unit/ Affected Source Description (Nominal Capacity)	Control Measure (Control Device ID Number)	Emission Point ID Number
Discharge of BL-DC8 to BL-SC2	Transfer Point	Dust Collector (BL-DC8)	BL-DC8
Discharge of Pneumatic Line to BL-SB7	Transfer Point	Dust Collector (BL-SB7-DC1)	BL-SB7-DC1
Discharge of BL-BE3 to BL-SB7	Transfer Point, 450 tons per hour	Dust Collector (BL-SB7-DC1)	BL-SB7-DC1
Discharge of BL-SB7-SPT (WEST)	Bulk Loading System, 450 tons per hour	Dust Collector (BL-SB7-DC1)	BL-SB7-DC1
Discharge of BL-SB7-SPT (EAST)	Bulk Loading System, 450 tons per hour	Dust Collector (BL-SPT-DC)	BL-SPT-DC
Truck Unloading to Mortar Additive Bins MA-B1, MA-B2, and MA-B3	Bulk Unloading System	Dust Collector (CM-MA-DC1)	CM-MA-DC1
Discharge of PH-P3	Bagging System, 276 tons per hour	Dust Collector (PH-DC1)	PH-DC1
Discharge of PH-P4	Bagging System, 276 tons per hour	Dust Collector (PH-DC2)	PH-DC2
Bagging Operation	Bagging System	Dust Collectors (PH-DC4 & PH-DC5)	PH-DC4 & PH-DC5

G. Particulate Matter Emission Standards

1. The Permittee shall not cause or allow to be emitted into the atmosphere from any emission unit listed in Condition V.A above any gases which exhibit opacity greater than 10 percent. [A.A.C. R18-2-1101(B)(50) {40 CFR §§ 63.1347 and 63.1348}]

2. The Permittee shall maintain and operate Dust Collectors CM7-DC1, CM7-DC3, D2-1-DC1, D2-PC, D3-1-DC1, D3-1-DC2, D5-PC, H4-DC2, and RS-DC1 such that the alarm of the associated Bag Leak Detection System, as required by Condition V.D.2.a of this Attachment, is not activated and alarm condition does not exist for more than 5 percent of the total operating time in a 6-month block period.
[A.A.C. R18-2-406(A)(4), R18-2-406(A)(5), and R18-2-1101(B)(50) {40 CFR § 63.1350(m)(9)}]

3. The Permittee shall not cause or allow to be emitted into the atmosphere from any Dust Collector listed in Condition V.A of this Attachment any gases which contain PM_{10} in excess of 0.005 gr/dscf, based on an average of three test runs of a minimum one hour duration each. [A.A.C. R18-2-406(A)(4)]

4. The Permittee shall not cause or allow to be emitted into the atmosphere from any Dust Collector gases which contain PM_{10} in excess of the following emission rates, based on an average of three test runs of a minimum one hour duration each. [A.A.C. R18-2-306.02 and R18-2-406(A)(5)]

Emission Point ID Number	PM_{10} Emission Limit (lbs/hr)
BL-DC1	0.11
BL-DC2	0.10
BL-DC3	0.12
BL-DC4	0.14

Emission Point ID Number	PM_{10} Emission Limit (lbs/hr)
BL-DC5	0.15
BL-DC6	0.16
BL-DC7	0.10
BL-DC8	0.21
BL-SB5-DC1	0.20
BL-SB5-DC2	0.06
BL-SB5-DC3	0.06
BL-SB7-DC1	0.17
BL-SPT-DC	0.10
C2-DC2	0.12
C2-DC3	0.20
C2-DC4	0.11
C2-DC5	0.47
C2-DC6	0.08
C2-DC7	0.10
C2-DC8	0.11
C2-DC9	0.07
C2-DC10	0.11
C2-DC11	0.11
C2-DC12	0.11
C2-DC13	0.12
C2-DC14	0.12
CM7-DC1	0.46
CM7-DC2	0.27
CM7-DC3	1.13
CM-DC10	0.25
CM-DC11	0.14
CM-DC12	0.25
CM-DC14	0.22
CM-DC15	0.22
CM-DC16	0.22
CM-DC17	0.16
CM-DC18	0.41
CM-DC8	0.16
CM-DC9	0.25
CM-MA-DC1	0.04
D2-1-DC1	0.50
D2-DC1	0.89
D2-DC3	0.04
D2-DC4	0.06

Emission Point ID Number	PM_{10} Emission Limit (lbs/hr)
D2-PC	3.15
D3-1-DC1	0.70
D3-1-DC2	3.78
D3-1-DC3	0.50
D4-DC1	0.27
D4-DC2	0.19
D5-DC1	0.28
D5-DC2	0.41
D5-PC	1.72
F2-DC1	0.29
F3-DC1	0.06
F3-DC2	0.07
F4-DC1	0.75
F5-DC1	0.28
H2-DC1	0.17
H2-DC2	0.01
H2-DC3	0.38
H4-DC1	0.08
H4-DC2	1.07
H5-DC1	0.20
J2-SD1-DC1	0.69
J2-SD2-DC1	0.69
J3-DC1	0.34
J3-DC2	0.34
J3-DC3	0.12
J3-DC4	0.12
J3-DC5	0.10
PH-DC1	0.20
PH-DC2	0.22
PH-DC3	0.15
PH-DC4	0.10
PH-DC5	0.27
RS-DC1	2.41

H. Air Pollution Control Requirements

At all times when any emission unit listed in Condition V.A of this Attachment is in operation, including periods of startup, shutdown, and malfunction, the Permittee shall, to the extent practicable, install, maintain and *operate the associated Dust Collector(s), Water Spray, Wind Screen, or Enclosure in a manner consistent with good air pollution control practice for minimizing particulate matter emissions*. This condition is not material in the event failure to comply is due to a sudden and unavoidable breakdown of

the process or the control equipment, resulted from unavoidable conditions during a startup or shutdown, or resulted from upset of operations.

[A.A.C. R18-2-331(A)(3)(d) and (e), R18-2-331(B), and R18-2-406(A)(4)]
[Material Permit Conditions are indicated with underline and italics]

I. Monitoring, Recordkeeping, and Reporting Requirements

1. Operations and Maintenance Plans

a. The Permittee shall prepare written operations and maintenance plans for each emission unit listed in Condition V.A of this Attachment.

[A.A.C. R18-2-1101(B)(50) {40 CFR § 63.1350(a)}]

b. Each plan required by Condition V.D.1.a above shall be submitted to the Director for review and approval using the appropriate permit revision mechanism in Title 18, Chapter 2, Article 3 of the Arizona Administrative Code. [A.A.C. R18-2-1101(B)(50) {40 CFR § 63.1350(a)}]

c. Each plan required by Condition V.D.1.a above shall include procedures for proper operation and maintenance of the affected source and air pollution control devices in order to meet the emission limits of Condition V.B.1. [A.A.C. R18-2-1101(B)(50) {40 CFR § 63.1350(a)(1)}]

d. For each Storage Bin, Conveying System Transfer Point, Bagging System, Bulk Unloading System, and Bulk Loading System listed in Condition V.A of this Attachment, the plan required by Condition V.D.1.a above shall include procedures to be used to periodically monitor the affected source. Such procedures must include the provisions of Condition V.D.3 of this Attachment. [A.A.C. R18-2-1101(B)(50) {40 CFR § 63.1350(a)(4)}]

e. Failure to comply with any provision of an operations and maintenance plan approved by the Director in accordance with Condition V.D.1.b above shall be a violation. [A.A.C. R18-2-1101(B)(50) {40 CFR § 63.1350(b)}]

2. Monitoring and Recordkeeping for Finish Mill and Certain Other Dust Collectors

a. *The Permittee shall install, calibrate,* maintain, *and operate Bag Leak Detection Systems for detecting leaks in Dust Collectors CM7-DC1, CM7-DC3, D2-1-DC1, D2-PC, D3-1-DC1, D3-1-DC2, D5-PC, H4-DC2, and RS-DC1.* This condition is not material in the event failure to comply is due to a sudden and unavoidable breakdown of the process or the control equipment, resulted from unavoidable conditions during a startup or shutdown, or resulted from upset of operations.

[A.A.C. R18-2-306(A)(3)(c) and (d), R18-2-331(A)(3)(c),R18-2-331(B), and R18-2-1101(B)(50) {40 CFR § 63.1350(m)}]
[Material Permit Conditions are indicated with underline and italics]

b. Each Bag Leak Detection System required by Condition V.D.2.a above shall meet the requirements of Conditions V.D.2.b(1) through V.D.2.b(11) below.

(1) Each Bag Leak Detection System must be certified by the manufacturer to be capable of detecting PM emissions at concentrations of 0.0044 grains per actual cubic foot or less. “Certify” shall mean that the instrument manufacturer has tested the instrument on gas streams having a range of particle size

distributions and confirmed by means of valid filterable PM tests that the minimum detectable concentration limit is 0.0044 grains per actual cubic foot or less.

[A.A.C. R18-2-306(A)(3)(c) and (d) and R18-2-1101(B)(50) {40 CFR § 63.1350(m)(1)}]

(2) The sensor on each Bag Leak Detection System must provide output of relative PM emissions.

[A.A.C. R18-2-306(A)(3)(c) and (d) and R18-2-1101(B)(50) {40 CFR § 63.1350(m)(2)}]

(3) Each Bag Leak Detection System must have an alarm that will activate automatically when it detects a significant increase in relative PM emissions greater than a preset level.

[A.A.C. R18-2-306(A)(3)(c) and (d) and R18-2-1101(B)(50) {40 CFR § 63.1350(m)(3)}]

(4) The presence of an alarm condition should be clearly apparent to facility operating personnel.

[A.A.C. R18-2-306(A)(3)(c) and R18-2-1101(B)(50) {40 CFR § 63.1350(m)(4)}]

(5) For a positive-pressure fabric filter, each compartment or cell must have a bag leak detector. For a negative-pressure or induced-air fabric filter, the bag leak detector must be installed downstream of the fabric filter. If multiple bag leak detectors are required (for either type of fabric filter), detectors may share the system instrumentation and alarm.

[A.A.C. R18-2-306(A)(3)(c) and (d) and R18-2-1101(B)(50) {40 CFR § 63.1350(m)(5)}]

(6) Each Bag Leak Detection System must be installed, operated, adjusted, and maintained so that it is based on the manufacturer's written specifications and recommendations.

[A.A.C. R18-2-306(A)(3)(c) and (d) and R18-2-1101(B)(50) {40 CFR § 63.1350(m)(6)}]

(7) The baseline output of each Bag Leak Detection System must be established as follows:

[A.A.C. R18-2-306(A)(3)(c) and R18-2-1101(B)(50) {40 CFR § 63.1350(m)(7)}]

(a) Adjust the range and the averaging period of the device; and

[A.A.C. R18-2-306(A)(3)(c) and R18-2-1101(B)(50) {40 CFR § 63.1350(m)(7)(i)}]

(b) Establish the alarm set points and the alarm delay time.

[A.A.C. R18-2-306(A)(3)(c) and R18-2-1101(B)(50) {40 CFR § 63.1350(m)(7)(ii)}]

(8) After initial adjustment, the range, averaging period, alarm set points, or alarm delay time may not be adjusted except as specified in the operations and maintenance plan required by Condition V.D.1.a of this Attachment. In no event may the range be increased by more than 100 percent or decreased by more than 50 percent over one calendar year period unless a responsible official as defined in 40 CFR § 63.2 certifies in writing to the Director that the Dust Collector has been inspected and found to be in good operating condition.

[A.A.C. R18-2-306(A)(3)(c) and R18-2-1101(B)(50) {40 CFR § 63.1350(m)(8)}]

(9) The Permittee shall continuously record the output from the Bag Leak Detection System during periods of normal operation.

Normal operation does not include periods when the Bag Leak Detection System is being maintained or during startup, shutdown or malfunction.

[A.A.C. R18-2-306(A)(3)(c) and R18-2-1101(B)(50) {40 CFR § 63.1350(m)(9)}]

(10) Except as provided in Condition V.D.2.b(11) below, each time the alarm activates, alarm time will be counted as the actual amount of time taken by the Permittee to initiate corrective actions.

[A.A.C. R18-2-306(A)(3)(c) and R18-2-1101(B)(50) {40 CFR § 63.1350(m)(9)}]

(11) If inspection of the Dust Collector demonstrates that no corrective actions are necessary, no alarm time will be counted.

[A.A.C. R18-2-306(A)(3)(c) and R18-2-1101(B)(50) {40 CFR § 63.1350(m)(9)}]

c. Each 6-month block period for which the Bag Leak Detection System alarm time, as determined in accordance with Conditions V.D.2.b(9) through V.D.2.b(11) above, exceeds 5% of the total operating time shall be considered a period of excess emissions. [A.A.C. R18-2-306(A)(5)(b)]

d. The Permittee shall report excess emissions and deviations in accordance with Sections XII.A and XII.B, respectively, in Attachment "A" of this permit. [A.A.C. R18-2-306(A)(5)(b)]

3. Periodic Visible Emissions Observations

For each Bagging System, Bulk Loading System, Bulk Unloading System, Storage Bin, and Transfer Point, listed in Condition V.A of this Attachment, the Permittee shall conduct periodic visible emissions observations in accordance with Conditions V.D.3.a through V.D.3.g below. This requirement does not apply to affected sources or associated dust collectors that utilize Bag Leak Detection Systems installed and operated in accordance with the requirements of Condition V.D.2 of this Attachment.

a. Except as provided in Condition V.D.3.e below, the Permittee must conduct a monthly 1-minute visible emissions test of the affected source in accordance with Method 22 of Appendix A to 40 CFR Part 60. The test must be conducted while the affected source is in operation.

[A.A.C. R18-2-1101(B)(50) {40 CFR § 63.1350(a)(4)(i)}]

b. If no visible emissions are observed in six consecutive monthly tests for an affected source, the Permittee may decrease the frequency of testing from monthly to semi-annually for that affected source. If visible emissions are observed during any semi-annual test, the Permittee must resume testing of that affected source on a monthly basis and maintain that schedule until no visible emissions are observed in six consecutive monthly tests. [A.A.C. R18-2-1101(B)(50) {40 CFR § 63.1350(a)(4)(ii)}]

c. If no visible emissions are observed during the semi-annual test for an affected source, the Permittee may decrease the frequency of testing from semi-annually to annually for that affected source. If visible emissions are observed during any annual test, the Permittee must resume testing of that affected source on a monthly basis and maintain that schedule until no visible emissions are observed in six consecutive monthly tests. [A.A.C. R18-2-1101(B)(50) {40 CFR § 63.1350(a)(4)(iii)}]

d. If visible emissions are observed during any Method 22 test, the Permittee must conduct a 6-minute test of opacity in accordance with Method 9 of Appendix A to 40 CFR Part 60. The Method 9 test must begin within one hour of any observation of visible emissions.

[A.A.C. R18-2-1101(B)(50) {40 CFR § 63.1350(a)(4)(iv)}]

e. The requirement to conduct Method 22 visible emissions monitoring under this paragraph shall not apply to any totally enclosed conveying system transfer point, regardless of the location of the transfer point. "Totally enclosed conveying system transfer point" shall mean a conveying system transfer point that is enclosed on all sides, top, and bottom. The enclosures for these transfer points shall be operated and maintained as total enclosures on a continuing basis in accordance with the facility operations and maintenance plan.

[A.A.C. R18-2-1101(B)(50) {40 CFR § 63.1350(a)(4)(v)}]

f. If any partially enclosed or unenclosed conveying system transfer point is located in a building, the Permittee shall have the option to conduct a Method 22 visible emissions monitoring test according to the requirements of Conditions V.D.3.a through V.D.3.d above for each such conveying system transfer point located within the building, or for the building itself, according to Condition V.D.3.g below.

[A.A.C. R18-2-1101(B)(50) {40 CFR § 63.1350(a)(4)(vi)}]

g. If visible emissions from a building are monitored pursuant to Condition V.D.3.f above, the requirements of Conditions V.D.3.a through V.D.3.d apply to the monitoring of the building, and the Permittee must also test visible emissions from each side, roof and vent of the building for at least 1 minute. The test must be conducted under normal operating conditions. [A.A.C. R18-2-1101(B)(50) {40 CFR § 63.1350(a)(4)(vii)}]

4. Recordkeeping, Reporting, and Notification Requirements for HAP Emission Standards

a. The Permittee shall maintain the following records:

[A.A.C. R18-2-1101(B)(50) {40 CFR § 63.1355(b)}]

(1) All records as required by 40 CFR §§ 63.10(b)(2) and (b)(3).

[A.A.C. R18-2-1101(B)(50) {40 CFR § 63.1355(b)}]

(2) All documentation supporting initial notifications and notifications of compliance status under 40 CFR § 63.9.

[A.A.C. R18-2-1101(B)(50) {40 CFR § 63.1355(b)(1)}]

(3) All records of applicability determination, including supporting analyses. [A.A.C. R18-2-1101(B)(50) {40 CFR § 63.1355(b)(2)}]

(4) If the Permittee has been granted a waiver under 40 CFR § 63.8(f)(6), any information demonstrating whether the source is meeting the requirements for a waiver of recordkeeping or reporting requirements.

[A.A.C. R18-2-1101(B)(50) {40 CFR § 63.1355(b)(3)}]

b. The Permittee shall comply with the reporting requirements specified in 40 CFR § 63.10 as follows: [R18-2-1101(B)(50) {40 CFR § 63.1354(b)}]

(1) As required by 40 CFR § 63.10(d)(2), the Permittee shall report the results of performance tests as Part of the notification of compliance status. [R18-2-1101(B)(50) {40 CFR § 63.1354(b)(1)}]

(2) As required by 40 CFR § 63.10(d)(3), the Permittee shall report the opacity results from tests required by Conditions V.E.4 of this Attachment. [R18-2-1101(B)(50) {40 CFR § 63.1354(b)(2)}]

(3) As required by 40 CFR § 63.10(d)(5), if actions taken by the Permittee during a startup, shutdown, or malfunction (including actions taken to correct a malfunction) are consistent with the procedures specified in the Permittee's startup, shutdown, and malfunction plan specified in 40 CFR § 63.6(e)(3), the Permittee shall state such information in a semi-annual report. Reports shall only be required if a startup, shutdown, or malfunction occurred during the reporting period. The startup, shutdown, and malfunction report may be submitted simultaneously with the excess emissions and continuous monitoring system performance reports. [R18-2-1101(B)(50) {40 CFR § 63.1354(b)(4)}]

(4) Any time an action taken by the Permittee during a startup, shutdown, or malfunction (including actions taken to correct a malfunction) is not consistent with the procedures in the startup, shutdown, and malfunction plan, the Permittee shall make an immediate report of the actions taken for that event within 2 working days, by telephone call or facsimile (fax) transmission. The immediate report shall be followed by a letter, certified by the Permittee, explaining the circumstances of the event, the reasons for not following the startup, shutdown, and malfunction plan, and whether any excess emissions and/or parameter monitoring exceedances are believed to have occurred.
[R18-2-1101(B)(50) {40 CFR § 63.1354(b)(5)}]

(5) As required by 40 CFR § 63.10(e)(2), the Permittee shall submit a written report of the results of the performance evaluation for the continuous monitoring system required by 40 CFR § 63.8(e). The Permittee shall submit the report simultaneously with the results of the performance test.
[R18-2-1101(B)(50) {40 CFR § 63.1354(b)(6)}]

(6) As required by 40 CFR § 63.10(e)(3), the Permittee shall submit an excess emissions and continuous monitoring system performance report for any event when the data provided by the continuous monitoring system indicate the source is not in compliance with the applicable emission limitation or operating parameter limit. [R18-2-1101(B)(50) {40 CFR § 63.1354(b)(8)}]

(7) The Permittee shall submit a summary report semiannually, along with the compliance certification, which contains the information specified in 40 CFR § 63.10(e)(3)(vi). In addition, the summary report shall include all failures to comply with any provision of any operation and maintenance plan required by Condition V.D.1.a of this Attachment.
[R18-2-1101(B)(50) {40 CFR § 63.1354(b)(9)}]

(8) If the total continuous monitoring system downtime for any continuous monitoring system is 10 percent or greater of the total operating time for the reporting period, the Permittee shall submit an excess emissions and continuous monitoring system performance report along with the summary report required by Condition V.D.4.b(7) of this Attachment.
[R18-2-1101(B)(50) {40 CFR § 63.1354(b)(10)}]

c. The Permittee shall comply with the notification requirements in 40 CFR § 63.9 as follows: [R18-2-1101(B)(50) {40 CFR § 63.1353(b)}]

(1) Notification of performance tests, as required by 40 CFR §§ 63.7 and 63.9(e). [R18-2-1101(B)(50) {40 CFR § 63.1353(b)(2)}]

(2) Notification of opacity and visible emission observations required by Condition V.E.4 of this Attachment in accordance with 40 CFR §§ 63.6(h)(5) and 63.9(f).
[R18-2-1101(B)(50) {40 CFR § 63.1353(b)(3)}]

(3) Notification of compliance status, as required by 40 CFR § 63.9(h). [R18-2-1101(B)(50) {40 CFR § 63.1353(b)(5)}]

d. The Permittee shall maintain files of all information (including all reports and notifications) required in a form suitable and readily available for inspection and review as required by 40 CFR § 63.10(b)(1). The files shall be retained for at least five years following the date of each occurrence, measurement, maintenance, corrective action, report, or record. At a minimum, the most recent two years of data shall be retained on site. The remaining three years of data may be retained off site. The files may be maintained on microfilm, on a computer, on floppy disks, on magnetic tape, or on microfiche.
[A.A.C. R18-2-1101(B)(50) {40 CFR § 63.1355(a)}]

5. Monitoring and Recordkeeping for Other Dust Collectors

For each Dust Collector listed in Condition V.A of this Attachment, the Permittee shall perform monitoring in accordance with Conditions V.D.5.a through V.D.5.d below. This requirement does not apply to affected sources or associated dust collectors that utilize Bag Leak Detection Systems installed and operated in accordance with the requirements of Condition V.D.2 of this Attachment.

a. The Permittee shall conduct a monthly visible emissions observation of the exhaust from each dust collector listed in Condition V.A of this Attachment, in accordance with EPA Reference Method 22. If visible emissions are observed during the monthly visible emissions observation, the Permittee shall initiate investigation of the dust collector within 24 hours of the occurrence, to identify any need for corrective action. If corrective action is required, the Permittee shall implement such corrective action as soon as practicable in order to avert or minimize possible exceedances of the emission standards in Conditions V.B.3 and V.B.4 of this Attachment.
[A.A.C. R18-403(A)(1), R18-2-406(A)(4), and R18-2-406(A)(5)]

b. *The Permittee shall install, calibrate*, maintain, and operate, according to the manufacturer's specifications, *a device for monitoring and recording the pressure drop across each dust collector*. This condition is not

material in the event failure to comply is due to a sudden and unavoidable breakdown of the process or the control equipment, resulted from unavoidable conditions during a startup or shutdown, or resulted from upset of operations.

[A.A.C. R18-2-331(A)(3)(c), R18-2-331(B), R18-403(A)(1), R18-2-406(A)(4), and R18-2-406(A)(5)]
[Material Permit Conditions are indicated with underline and italics]

c. The Permittee shall perform monthly inspections of each dust collector and the associated pressure drop continuous parameter monitoring system in accordance with the manufacturers' recommended procedures. The Permittee shall take corrective action following the discovery of any abnormal operation or required maintenance of any dust collector or the associated pressure drop continuous parameter monitoring system as expeditiously as practicable in accordance with good air pollution control practices for minimizing emissions, but no later than within 24 hours following detection.

[A.A.C. R18-403(A)(1), R18-2-406(A)(4), and R18-2-406(A)(5)]

d. If a monthly inspection performed pursuant to Condition V.D.5.c above indicates that the pressure drop across any dust collector is outside the range established pursuant to Condition V.E.5.b, the Permittee shall initiate investigation of the control equipment within 24 hours of the occurrence to identify any need for corrective action. If corrective action is required, the Permittee shall implement such corrective action as soon as practicable in order to avert or minimize possible exceedances of the emission standards in Conditions V.B.3 and V.B.4 of this Attachment.

[A.A.C. R18-403(A)(1), R18-2-406(A)(4), and R18-2-406(A)(5)]

6. Notification Requirements for Kiln 6 Project

a. On or before the date that this Section becomes effective, the Permittee shall submit written notification of the schedule for shutting down or modifying the emissions units covered by Sections VI of Attachment "C". [A.A.C. R18-2-306.01, R18-2-403(A)(2)]

b. The notification required by Condition V.D.6.a above shall include an updated PM netting analysis and an updated PM_{10} emission offset analysis for the Kiln 6 project. [A.A.C. R18-2-306.01, R18-2-403(A)(2)]

J. Testing Requirements

1. The Permittee shall perform initial and periodic performance tests in accordance with Conditions V.E.2 through V.E.5 below. Initial performance tests shall be performed within 180 days after initial startup of the affected source.

[A.A.C. R18-2-403(A)(1), R18-2-406(A)(4) and R18-2-1101(B)(1) {40 CFR §§ 63.6(h)(5) and 63.7(a) }]

2. For each performance test required pursuant to Condition V.E.1 above, the Permittee shall submit a test plan to the Director in accordance with Condition XVIII.D of Attachment "A".

[A.A.C. R18-2-312(B) and R18-2-1101(B)(50) {40 CFR § 63.1349(a)}]

3. Performance test results shall be documented in complete test reports that contain the information required by Conditions V.E.3.a through V.E.3.k below.

[A.A.C. R18-2-403(A)(1), R18-2-406(A)(4), R18-2-1101(B)(50) {40 CFR § 63.1349(a)}]

a. A brief description of the process and the air pollution control system;

[A.A.C. R18-2-403(A)(1), R18-2-406(A)(4), R18-2-1101(B)(50) {40 CFR § 63.1349(a)(1)}]

b. Sampling location description(s);

[A.A.C. R18-2-403(A)(1), R18-2-406(A)(4), R18-2-1101(B)(50) {40 CFR § 63.1349(a)(2)}]

c. A description of sampling and analytical procedures and any modifications to standard procedures;

[A.A.C. R18-2-403(A)(1), R18-2-406(A)(4), R18-2-1101(B)(50) {40 CFR § 63.1349(a)(3)}]

d. Test results;

[A.A.C. R18-2-403(A)(1), R18-2-406(A)(4), R18-2-1101(B)(50) {40 CFR § 63.1349(a)(4)}]

e. Quality assurance procedures and results;

[A.A.C. R18-2-403(A)(1), R18-2-406(A)(4), R18-2-1101(B)(50) {40 CFR § 63.1349(a)(5)}]

f. Records of operating conditions during the test, preparation of standards, and calibration procedures;

[A.A.C. R18-2-403(A)(1), R18-2-406(A)(4), R18-2-1101(B)(50) {40 CFR § 63.1349(a)(6)}]

g. Raw data sheets for field sampling and field and laboratory analyses;

[A.A.C. R18-2-403(A)(1), R18-2-406(A)(4), R18-2-1101(B)(50) {40 CFR § 63.1349(a)(7)}]

h. Documentation of calculations;

[A.A.C. R18-2-403(A)(1), R18-2-406(A)(4), R18-2-1101(B)(50) {40 CFR § 63.1349(a)(8)}]

i. All data recorded and used to establish parameters for compliance monitoring;

[A.A.C. R18-2-403(A)(1), R18-2-406(A)(4), R18-2-1101(B)(50) {40 CFR § 63.1349(a)(9)}]

j. Any other information required by the test method; and

[A.A.C. R18-2-403(A)(1), R18-2-406(A)(4), R18-2-1101(B)(50) {40 CFR § 63.1349(a)(10)}]

k. All other relevant information.

[A.A.C. R18-2-403(A)(1), R18-2-406(A)(4), R18-2-1101(B)(50) {40 CFR § 63.1349(a)}]

4. Test Methods and Procedures for Opacity of Visible Emissions

a. The Permittee shall demonstrate initial compliance with Condition V.B.1 of this Attachment by conducting tests in accordance with Method 9 of Appendix A to 40 CFR Part 60.

[A.A.C. R18-2-1101(B)(50) {40 CFR § 63.1349(b)(2)}]

b. Each performance test required by Condition V.E.4.a above shall be conducted under the conditions that exist when the affected source is operating at the representative performance conditions in accordance with 40 CFR § 63.7(e). [A.A.C. R18-2-1101(B)(50) {40 CFR § 63.1349(b)(2)}]

c. The maximum 6-minute average opacity exhibited during the test period shall be used to determine whether the affected source is in initial

compliance with the opacity standard.

[A.A.C. R18-2-1101(B)(50) {40 CFR § 63.1349(b)(2)}]

d. The duration of the Method 9 performance test shall be 3 hours (thirty 6-minute averages), except that the duration of the Method 9 performance test may be reduced to 1 hour if Conditions V.E.4.d(1) and V.E.4.d(2) below are met: [A.A.C. R18-2-1101(B)(50) {40 CFR § 63.1349(b)(2)}]

(1) There are no individual readings greater than 10 percent opacity;

[A.A.C. R18-2-1101(B)(50) {40 CFR § 63.1349(b)(2)(i)}]

(2) There are no more than three readings of 10 percent for the first 1-hour period. [A.A.C. R18-2-1101(B)(50) {40 CFR § 63.1349(b)(2)(ii)}]

5. Test Methods and Procedures for Particulate Matter

a. The Permittee shall demonstrate initial compliance with Conditions V.B.3 and V.B.4 of this Attachment by conducting performance tests as follows. [A.A.C. R18-2-403(A)(1), R-18-406(A)(4) and R-18-406(A)(5)]

(1) The Permittee shall use any of the following test methods to determine the PM_{10} concentration:

(a) Method 5 in Appendix A to 40 CFR Part 60;

(b) Method 201 in Appendix M to 40 CFR Part 51; or

(c) Method 201a in Appendix M to 40 CFR Part 51.

[A.A.C. R18-2-403(A)(1), R-18-406(A)(4) and R-18-406(A)(5)]

(2) Each performance test shall consist of three separate runs.

[A.A.C. R18-2-403(A)(1), R-18-406(A)(4) and R-18-406(A)(5)]

(3) Each test run shall be conducted for at least one hour, and the minimum sample volume shall be 30 dscf.

[A.A.C. R18-2-403(A)(1), R-18-406(A)(4) and R-18-406(A)(5)]

(4) The average of the three runs shall be used to determine compliance.

[A.A.C. R18-2-403(A)(1), R-18-406(A)(4) and R-18-406(A)(5)]

b. For each dust collector subject to the requirements of Condition V.D.5 of this Attachment, during each performance test conducted pursuant to Condition V.E.5.a above, the Permittee shall determine a range of pressure drop values for the dust collector using the following procedures:

(1) During each performance test run, continuously monitor and record the pressure drop across the dust collector as required under Condition V.D.5.b above;

[A.A.C. R18-2-306(A)(3)(c), R18-2-403(A)(1), R18-2-406(A)(4), and R18-2-406(A)(5)]

(2) Determine a range of dust collector pressure drop values and associated averaging time, based on the pressure drop data monitored during the performance test. The maximum pressure

drop (i.e., the high end of the range) shall be 3.0 in. w.c. greater than the arithmetic average of the pressure drop readings during the performance test. The minimum pressure drop (i.e., the low end of the range) shall be either one-half the arithmetic average of the pressure drop readings during the performance test or 3.0 in. w.c. less than the arithmetic average of the pressure drop readings during the performance test, whichever is greater.

[A.A.C. R18-2-306(A)(3)(c), R18-2-403(A)(1), R18-2-406(A)(4), and R18-2-406(A)(5)]

c. For any affected facility for which the initial performance tests required by Condition V.E.5.a above are performed with more than three years remaining in the permit term, the performance tests required by Condition V.E.5.a shall be repeated once during the permit term.

[A.A.C. R18-2-403(A)(1), R-18-406(A)(4) and R-18-406(A)(5)]

K. Permit Shield

Compliance with the terms of this Section shall be deemed compliance with the following applicable requirement(s) in effect on the date of permit issuance: 40 CFR Part 63 Subpart LLL. [A.A.C. R18-2-325]

VI. EMERGENCY GENERATOR

The requirements of this Section shall apply beginning on the first date when the emissions unit listed in Condition VI.A below becomes operational. The unit listed in Condition VI.A shall be deemed operational on the first calendar day following on-site installation.

A. List of Emission Units

Emission Unit Name (Equipment ID Number)	Emission Unit Description	Control Measure (Control Device ID Number)
Emergency Generator	Reciprocating internal combustion engine, diesel fuel-fired, driving emergency electrical generator, 1,249 kW output	Not applicable

B. Emission Limits/Standards

1. The Permittee shall not cause or allow the operation of the emergency generator to exceed the limits listed in Conditions VI.B.1.a and VI.B.1.b below.

[A.A.C. R18-2-306.01]

a. *The Permittee shall not cause or allow the emergency generator to operate in excess of 50 non-emergency hours per year. The following shall be excluded from consideration in determining compliance with this limitation:*

(1) *Operation for the purpose of maintenance checks and readiness testing, provided that the tests are recommended by the manufacturer, the vendor, or the insurance company associated with the engine.*

(2) *Operation in emergency situations.*

[A.A.C. R18-2-306.01(A) and R18-2-331(A)(3)(a)]
[Material Permit Conditions are indicated with underline and italics]

b. The Permittee shall not cause or allow the emergency generator to operate except for emergency operation as provided in Condition VI.B.1.b(1) below and maintenance and testing as provided by Condition VI.B.1.b(2) below.

(1) Except as provided in Condition VI.B.1.a above, there is no time limit on the use of the emergency generator in emergency situations.

(2) The emergency generator may be operated for the purpose of maintenance checks and readiness testing, provided that the tests are recommended by Federal, State, or local government, the manufacturer, the vendor, or the insurance company associated with the engine. Maintenance checks and readiness testing are limited to 100 hours per year.

[A.A.C. R18-2-403(A)(1), R18-2-406(A)(4), 40 CFR § 60.4211(e)]

2. The Permittee shall not install or operate the emergency generator unless said engine has been certified by the engine manufacturer to meet the certification emission standards for new nonroad compression ignition engines for the same model year and maximum engine power in 40 CFR § 89.112 and 40 CFR § 89.113 for all pollutants beginning in model year 2007. The engine must be installed and configured according to the manufacturer's specifications.

[A.A.C. R18-2-403(A)(1), R18-2-406(A)(4), 40 CFR §§ 60.4205(b) and 60.4211(c)]

3. The Permittee shall operate and maintain the emergency generator according to the manufacturer’s written instructions, or procedures developed by the Permittee that are approved by the engine manufacturer, over the entire life of the engine. The Permittee may change only those settings that are permitted by the engine manufacturer. [A.A.C. R18-2-403(A)(1), R18-2-406(A)(4), 40 CFR §§ 60.4206 and 60.4211(a)]

4. The Permittee shall not combust in the emergency generator any fuel other than diesel fuel that meets the requirements of 40 CFR § 80.510(b).

[A.A.C. R18-2-403(A)(1), R18-2-406(A)(4), 40 CFR § 60.4207(b)]

5. The Permittee shall not cause or allow to be emitted to the atmosphere from the emergency generator smoke for any period greater than 10 consecutive seconds which exceeds 40 percent opacity. Visible emissions when starting cold equipment shall be exempt from this requirement for the first 10 minutes.

[A.A.C. R18-2-719(E)]

6. Except as provided by Conditions VI.B.6.a and VI.B.6.b below, fuel shall not be combusted in the emergency generator except during periods when a valid visible emissions observation can be conducted in accordance with EPA Reference Method 9.

a. Condition VI.B.6 shall not apply to periods of emergency usage.

b. Operation of the emergency generator may occur during periods when a valid visible emissions observation in accordance with EPA Reference

Method 9 is not possible, provided that the requirements of Conditions VI.C.1.a and VI.C.1.b of this Attachment are met for that calendar day.

[A.A.C. R18-2-306(A)(3)]

C. Monitoring, Recordkeeping, and Reporting Requirements

1. The Permittee shall demonstrate compliance with the opacity limitation in Condition VI.B.5 of this Attachment as follows:

   a. A certified EPA Reference Method 9 observer shall conduct visible emissions observations on the emergency generator. All visible emissions observations shall be conducted in accordance with EPA Reference Method 9.

   b. Except as provided by Conditions VI.C.1.c and VI.C.1.d below, visible emissions observations required by Condition VI.C.1.a above shall be conducted for the emergency generator for at least one six-minute period each calendar day.

   c. Visible emissions observations shall not be required for the emergency generator for any calendar day on which no fuel is combusted in the emergency generator.

   d. Visible emissions observations shall not be required for the emergency generator for any calendar day on which the only fuel combustion in the emergency generator occurs during emergency operation.

[A.A.C. R18-2-306(A)(3)]

2. The Permittee shall maintain on-site, and readily available for inspection, a record of each visible emissions observation conducted as required by Conditions VI.C.1.a and VI.C.1.b of this Attachment. Each visible emissions observation record shall include the following:

   a. The emissions unit for which the visible emissions observation was performed;

   b. Location, date, and time of the visible emissions observation;

   c. The results of the visible emissions observation;

   d. The operating conditions existing at the time of the visible emissions observation; and

   e. The name of the observer.

[A.A.C. R18-2-306(A)(3)]

3. The Permittee shall maintain readily available records of the following:

   a. Records of the type and quantity of fuel combusted in the emergency generator.

      (1) Records required by Condition VI.C.3.a shall be created and maintained for each calendar day on which fuel is combusted in the emergency generator.

(2) Records required by Condition VI.C.3.a shall indicate the sulfur content of the fuel combusted and the method of determination.

b. Records of all maintenance performed on the internal combustion engine. These records shall be created and maintained for each calendar day on which maintenance is performed on the emergency generator.

[A.A.C. R18-2-306(A)(3)]

4. The Permittee shall install a non-resettable hour meter prior to startup of the emergency generator.

[A.A.C. R18-2-403(A)(1), R18-2-406(A)(4), 40 CFR § 60.4209(a)]

5. The Permittee shall submit the initial notification in 40 CFR § 63.9 (b) by the date specified. The notification should include the following:

a. The information in 40 CFR §§ 63.9(b)(2)(i) through (v).

b. A statement that the internal combustion engine has no additional requirements.

c. An explanation of the basis of the exclusion (i.e., that it operates exclusively as an emergency, stationary, reciprocating internal combustion engine).

[40 CFR §§ 63.6590(b) and 63.6645(d)]

D. Permit Shield

Compliance with the terms of this Section shall be deemed compliance with the following applicable requirement(s) in effect on the date of permit issuance: 40 CFR 60 Subpart IIII, 40 CFR Part 63 Subpart ZZZZ, A.A.C. R18-2-719(E). [A.A.C. R18-2-325]

This page was left blank intentionally.

ATTACHMENT "E": EQUIPMENT LIST (K1-K4)
AIR QUALITY CONTROL PERMIT NO. 47259
CALPORTLAND COMPANY - RILLITO CEMENT PLANT

Process Area/ Equipment ID	Type/Description	Nominal Capacity	Year Installed	Manufacturer	Model	Serial Number	Applicable Section
I. Quarry Crusher System							
Truck Dump	Hopper	150 ton	1971	N/A	N/A	N/A	Sec.III.A Att. C
B2-PF1	Pan feeder	1200 tph	1971	Stephens	N/A	N/A	Sec.III.A Att. C
				Adamson			
B2-VG1	Vibrating grizzly	1200 tph	1971	Allis Chalmers	N/A	B40565	Sec.III.A Att. C
B2-IC1	Impact crusher	1200 tph	1971	Hazmag	N1000	N/A	Sec.III.A Att. C
B2-BF1	Belt feeder	1200 tph	1971	Stephens Adamson	N/A	N/A	Sec.III.A Att. C
B2-BC1	Belt Conveyor	1200 tph	1971	Rex Chain Belt	N/A	N/A	Sec.III.A Att. C
B3-BC1	Belt Conveyor	1200 tph	1971	Rex Chain Belt	N/A	N/A	Sec.III.A Att. C
B3-BC2	Belt Conveyor	1200 tph	1971	Rex Chain Belt	N/A	N/A	Sec.III.A Att. C
B3-BC3	Belt Conveyor	1200 tph	1971	Rex Chain Belt	N/A	N/A	Sec.III.A Att. C
B3-BC4	Shuttle Conveyor	1200 tph	1971	Rex Chain Belt	N/A	N/A	Sec.III.A Att. C
B3-VS1	Vibrating screen	1200 tph	2003	METSO	8X20 SD	26A818	Sec.III.A Att. C
B2-DC1	Dust Collector	N/A	1971	Mikropul	2G3-96	70-H-1931	Sec.III.A Att. C
B3-DC1	Dust Collector	N/A	1971	Mikropul	1F3-24	70-H-1934	Sec.III.A Att. C
Various enclosed screw conveyor devices							
II. Overland Conveyor System							
B5-VF1 through B5-VF12	Vibrating feeders	1200 tph	1971	Eriez Magnetics	95A	RD4-109 through RD4120	Sec.III.A Att. C
B5-BC1	Belt Conveyor	1200 tph	1971	Rex Chain Belt	N/A	N/A	Sec.III.A Att. C
B5-BC2	Belt Conveyor	1200 tph	1971	Rex Chain Belt	N/A	N/A	Sec.III.A Att. C
B5-BC3	Belt Conveyor	1200 tph	1971	Rex Chain Belt	N/A	N/A	Sec.III.A Att. C
B5-BC4	Belt Conveyor	1200 tph	1971	Rex Chain Belt	N/A	N/A	Sec.III.A Att. C
B5-DC1	Dust Collector	N/A	1971	Mikropul	36S-8-30	70-H-1935	Sec.III.A Att. C
B5-DC2	Dust Collector	N/A	1971	Mikropul	36S-8-30	70-H-1936	Sec.III.A Att. C
B5-DC3	Dust Collector	N/A	1971	Mikropul	36S-8-30	71-H-390	Sec.III.A Att. C

Process Area/ Equipment ID	Type/Description	Nominal Capacity	Year Installed	Manufacturer	Model	Serial Number	Applicable Section
III: Stacker/Reclaimer and Storage Area							
B6-BC1	Belt Conveyor	600 tph	1971	Rex Chain Belt	N/A	N/A	Sec.III.A Att. C
B7-BC1	Belt Conveyor	1200 tph	1971	Rex Chain Belt	N/A	N/A	Sec.III.A Att. C
B7-BC2	Belt Conveyor	1200 tph	1971	MIAG	N/A	N/A	Sec.III.A Att. C
B7-BC3	Stacker Boom Conveyor	1200 tph	N/A	MIAG	N/A	N/A	Sec.III.A Att. C
B8-BC1	Belt Conveyor	450 tph	1971	N/A	N/A	N/A	Sec.III.A Att. C
B8-BC1A	Belt Conveyor	500 tph	1971	N/A	N/A	N/A	Sec.III.A Att. C
C2-BC4	Belt Conveyor	500 tph	1971	Rex Chain Belt	N/A	N/A	Sec.III.A Att. C
C2-TR1	Reclaimer	500 tph	1971	MIAG	N/A	N/A	Sec.III.A Att. C
B7-TS	Stacker	1200 tph	1971	MIAG	N/A	N/A	Sec.III.A Att. C
B6-DC3	Dust Collector	N/A	1971	Mikropul	100S-8-20	71-H-1396	Sec.III.A Att. C
B7-DC1	Dust Collector	N/A	1971	Mikropul	80S-8-20	N/A	Sec.III.A Att. C
B8-DC1	Dust Collector	N/A	1971	Mikropul	80S-8-20	N/A	Sec.III.A Att. C
B8-DC2	Dust Collector	N/A	1971	Mikropul	80S-8-20	N/A	Sec.III.A Att. C
IV: Roller Mill Feed Area							
D4-HOP	Hopper	50 Tons	2000	N/A	N/A	N/A	Sec.VI Att. C
D4-BF1	Belt Feeder	100 tph	2000	N/A	N/A	N/A	Sec.VI Att. C
D4-SB3	Additive Bin	150 tons	2000	N/A	N/A	N/A	Sec.VI Att. C
D4-SB4	Additive Bin	150 tons	2000	N/A	N/A	N/A	Sec.VI Att. C
D4-SB5	Additive Bin	150 tons	2000	N/A	N/A	N/A	Sec.VI Att. C
D4-SB6	Additive Bin	150 tons	2000	N/A	N/A	N/A	Sec.VI Att. C
C2-BC1	Belt Conveyor	460 tph	1971	MIAG	N/A	N/A	Sec.III.A Att. C
C2-BC2	Belt Conveyor	460 tph	1971	MIAG	N/A	N/A	Sec.III.A Att. C
C2-BC3	Belt Conveyor	460 tph	1971	Rex Chain Belt	N/A	N/A	Sec.III.A Att. C
C2-BC3-MGT-BC	Belt Conveyor	N/A	2009	Eriez Magnetics	N/A	N/A	
C2-BC7	Belt Conveyor	460 tph	2000	Terra Nova	N/A	N/A	Sec.VI Att. C

Process Area/ Equipment ID	Type/Description	Nominal Capacity	Year Installed	Manufacturer	Model	Serial Number	Applicable Section
D4-BC1	Belt Conveyor	460 tph	2000	Terra Nova	N/A	N/A	Sec.VI Att. C
C2-BC3-BF1	Belt Feeder	200 tph	1971	N/A	N/A	N/A	Sec.VI Att. C
C2-BC3-BS	Belt Scale	460 tph	1971	Merrick	L-430	L-430-9716	Sec.VI Att. C
D4-BS1	Belt Scale	460 tph	2000	Merrick	450	450-MC^2-24295	Sec.VI Att. C
D4-BS2	Belt Scale	460 tph	2000	Merrick	450	450-MC^2-24296	Sec.VI Att. C
D4-BS3	Belt Scale	460 tph	2009	Merrick	450	450-MC^2-30310	Sec.VI Att. C
D4-BS4	Belt Scale	460 tph	2000	Merrick	450	450-MC^2-24298	Sec.VI Att. C
D4-BS5	Belt Scale	460 tph	2000	Merrick	450	450-MC^2-24299	Sec.VI Att. C
D4-BS6	Belt Scale	460 tph	2006	Merrick	450	450-MC^2-28245	Sec.VI Att. C
D4-BE1	Bucket Elevator	100 tph	2000	Rexnord	2116M 34x64	250021	Sec.VI Att. C
C2-DR1	Drag Rake	100 tph	1971	MIAG	N/A	N/A	Sec.VI Att. C
C2-DR2	Drag Rake	100 tph	1971	MIAG	N/A	N/A	Sec.VI Att. C
D4-DR1	Drag Conveyor	100 tph	2000	Rexnord	N/A	N/A	Sec.VI Att. C
C2-BE3	Bucket Elevator	460 tph	1971	MIAG	N/A	N/A	Sec.VI Att. C
C2-BE4	Bucket Elevator	460 tph	1971	MIAG	N/A	N/A	Sec.VI Att. C
C2-SB7	Storage Bin	250 tons	2000	N/A	N/A	N/A	Sec.VI Att. C
C2-SB8	Storage Bin	250 tons	2000	N/A	N/A	N/A	Sec.VI Att. C
D4-VB1	Bin Vibrator	460 tph	2000	Vibra Screw	10’0” BA	2002188	Sec.VI Att. C
D4-VB2	Bin Vibrator	460 tph	2000	Vibra Screw	10’0” BA	2002189	Sec.VI Att. C
D4-VB4	Bin Vibrator	100 tph	2000	Vibra Screw	8’0” BA	N/A	Sec.VI Att. C
D4-VB5	Bin Vibrator	100 tph	2000	Vibra Screw	8’0” BA	N/A	Sec.VI Att. C
C2-DC1	Dust Collector	N/A	1971	Mikropul	36S-8-30	71-H-1631	Sec.VI Att. C
C2-DC3	Dust Collector	N/A	2000	Amerex	RP-12-36-D6	N/A	Sec.VI Att. C
D4-DC1	Dust Collector	N/A	2000	Amerex	RP-12-169-D6	N/A	Sec.VI Att. C
D4-DC2	Dust Collector	N/A	2000	Amerex	RP-12-81-D6	N/A	Sec.VI Att. C
V: Roller Mill							
D4-RM1	Roller Mill	460 tph	2000	Polysius Quadropol	RMR 45/23	N/A	Sec.VI Att. C
D4-SS1	Separator	460 tph	2000	Polysius	Sepol RMR 410	N/A	Sec.VI Att. C
D4-SB1	Storage Bin	460 tph	2000	N/A	N/A	N/A	Sec.VI Att. C

Process Area/ Equipment ID	Type/Description	Nominal Capacity	Year Installed	Manufacturer	Model	Serial Number	Applicable Section
D4-VF1	Vibrating Feeder	460 tph	2000	Kenergy	Sepol RMR 410	KDF-6447	Sec.VI Att. C
D4-BE2	Bucket Elevator	460 tph	2000	Rexnord	1630-24108 34x64	250025	Sec.VI Att. C
D4-CC1	Cyclone	460 tph	2000	Polysius	Sepol RMR 410	N/A	Sec.VI Att. C
D4-CC2	Cyclone	460 tph	2000	Polysius	N/A	N/A	Sec.VI Att. C
D4-CC3	Cyclone	460 tph	2000	Polysius	N/A	N/A	Sec.VI Att. C
D4-CC4	Cyclone	460 tph	2000	Polysius	N/A	N/A	Sec.VI Att. C
Various air slide devices							
Various enclosed screw conveyor devices							
VI: Homogenizing and Kiln Feed Silos							
F2-BE1	Bucket Elevator	300 tph	1971, 2002	Rexnord	N/A	N/A	Sec.VI Att. C
F2-PS-BE1	Bucket Elevator	100 tph	N/A	N/A	N/A	N/A	Sec.VI Att. C
F3-BE1	Bucket Elevator	250 tph	1971	Rex Chain Belt	N/A	N/A	Sec.VI Att. C
F2-SB1	Homogenizing Silo	2400 tons	1971	Fuller	N/A	N/A	Sec.VI Att. C
F3-SB1	Kiln Feed Storage Silo	2600 tons	1971	N/A	N/A	N/A	Sec.VI Att. C
F3-SB2	Kiln Feed Storage Silo	2600 tons	1971	N/A	N/A	N/A	Sec.VI Att. C
F2-DC1	Dust Collector	N/A	2002	Amerex	N/A	N/A	Sec.VI Att. C
F2-DC4	Dust Collector	N/A	1971	Mikropul	64S-8-20	71-H-391	Sec.VI Att. C
F3-DC1	Dust Collector	N/A	1971	Mikropul	36S-8-30	71-H-392	Sec.VI Att. C
F3-DC2	Dust Collector	N/A	1971	Mikropul	36S-8-30	71-H-393	Sec.VI Att. C
Various air slide devices							
Various enclosed screw conveyor devices							
VII: Raw Feed Materials to Rock Storage							
Crusher Hopper	Hopper	500 tph	1949	N/A	N/A	N/A	Sec.III.A Att. C
B9-PF1	Pan Conveyor	500 tph	1949	N/A	N/A	N/A	Sec.III.A Att. C
B9-IC	Impact Crusher	500 tph	1949	Pennsylvania Crusher	CF-15-50	1765	Sec.III.A Att. C
B9-VS1	Vibrating Screen	500 tph	2009	General Kinematics	FRC 72” X	C09904-01	Sec.III.A Att. C

Process Area/ Equipment ID	Type/Description	Nominal Capacity	Year Installed	Manufacturer	Model	Serial Number	Applicable Section
B9-VS2	Vibrating Screen	500 tph	1952	Hewitt Robbins	N/A	N/A	Sec.III.A Att. C
B9-BC1	Belt Conveyor	500 tph	1949	N/A	N/A	N/A	Sec.III.A Att. C
B9-BC2	Belt Conveyor	500 tph	1949	N/A	N/A	N/A	Sec.III.A Att. C
B9-BC3	Belt Conveyor	500 tph	1949	Stephens Adamson	5-S4	N/A	Sec.III.A Att. C
B9-BC4	Belt Conveyor	500 tph	1949	N/A	N/A	N/A	Sec.III.A Att. C
B9-BC4-BF	Belt feeder	50 tph	2000	N/A	N/A	N/A	Sec.III.B Att. C
B9-BC4-BFHOP	Hopper	50 tph	2000	N/A	N/A	N/A	Sec.III.A Att. C
B9-BC5	Belt Conveyor	500 tph	1951	N/A	N/A	N/A	Sec.III.A Att. C
B9-BC6	Belt Conveyor	500 tph	N/A	N/A	N/A	N/A	Sec.III.A Att. C
B9-DC1	Dust Collector	N/A	1971, 2001	Mikropul	N/A	N/A	Sec.III.A Att. C
B9-DC2	Dust Collector	N/A	1985	Mikropul	80F3-10	855192H1	Sec.III.A Att. C
B9-DC3	Dust Collector	N/A	1985	Mikropul	80F2-10	855193H1	Sec.III.A Att. C
B9-DC5	Dust Collector	N/A	1985	Mikropul	36S-8-30	71-H-1622	Sec.III.A Att. C
VIII. Raw Grinding - AC Area							
AC1 Mill	Mill	25 tph	1949	Allis Chalmers	N/A	N/A	Sec.VI Att. C
AC1-SS	Separator	25 tph	1949	Sturtevant	N/A	N/A	Sec.VI Att. C
AC1-BE1	Bucket Elevator	25 tph	1949	N/A	N/A	N/A	Sec.VI Att. C
AC1-BS1	Belt Scale	25 tph	1949	N/A	N/A	N/A	Sec.VI Att. C
AC1-SB	Feed Bin	30 tons	1949	N/A	N/A	N/A	Sec.VI Att. C
AC2 Mill	Mill	25 tph	1949	Allis Chalmers	N/A	N/A	Sec.VI Att. C
AC2-SS	Separator	25 tph	1949	Sturtevant	N/A	N/A	Sec.VI Att. C
AC2-BE1	Bucket Elevator	25 tph	1949	N/A	N/A	N/A	Sec.VI Att. C
AC2-BS1	Belt Scale	25 tph	1949	N/A	N/A	N/A	Sec.VI Att. C
AC2-BS1-VF1	Vibrating Feeder	25 tph	1949	N/A	N/A	N/A	Sec.VI Att. C
AC2-SB	Feed Bin	30 tons	1949	N/A	N/A	N/A	Sec.VI Att. C
AC3 Mill	Mill	25 tph	1951	Allis Chalmers	N/A	N/A	Sec.VI Att. C
AC3-SS	Separator	25 tph	1951	Sturtevant	N/A	N/A	Sec.VI Att. C
AC3-BE1	Bucket Elevator	25 tph	1951	N/A	N/A	N/A	Sec.VI Att. C

Process Area/ Equipment ID	Type/Description	Nominal Capacity	Year Installed	Manufacturer	Model	Serial Number	Applicable Section
AC3-BS1	Belt Scale	25 tph	1951	Merrick	N/A	N/A	Sec.VI Att. C
AC3-BS1-VF1	Vibrating Feeder	25 tph	1951	N/A	N/A	N/A	Sec.VI Att. C
AC3-SB	Feed Bin	30 tons	1951	N/A	N/A	N/A	Sec.VI Att. C
AC4 Mill	Mill	25 tph	1955	Allis Chalmers	N/A	N/A	Sec.VI Att. C
AC4-SS	Separator	25 tph	1955	Sturtevant	N/A	N/A	Sec.VI Att. C
AC4-BE1	Bucket Elevator	25 tph	1955	N/A	N/A	N/A	Sec.VI Att. C
AC4-BS1	Belt Scale	25 tph	1997	Merrick	450	450-MC^2-23019	Sec.VI Att. C
AC4-SB	Feed Bin	18 tons	1955	N/A	N/A	N/A	Sec.VI Att. C
AC-DR1	Drag Conveyor	100 tph	1949	N/A	N/A	N/A	Sec.VI Att. C
AC-BE1	Bucket Elevator	100 tph	1949	N/A	N/A	N/A	Sec.VI Att. C
AC-BC1	Belt Conveyor	100 tph	1949	N/A	N/A	N/A	Sec.VI Att. C
AC-BS1	Belt Scale	10 tph	1996	Merrick	450	450-MC^2-22187	Sec.VI Att. C
AC-BS2	Belt Scale	100 tph	1996	Merrick	450	450-MC^2-22188	Sec.VI Att. C
AC-BS3	Belt Scale	100 tph	1996	Merrick	450	450-MC^2-22189	Sec.VI Att. C
AC-BS4	Belt Scale	100 tph	1996	Merrick	450	450-MC^2-22190	Sec.VI Att. C
AC-DC3	Dust Collector	N/A	1981	Mikropul	221S-8-20	82129	Sec.VI Att. C
AC1-DC1	Dust Collector	N/A	1981	Mikropul	221S-10-20	7844H1	Sec.VI Att. C
AC2-DC1	Dust Collector	N/A	1979	Mikropul	221S-10-20	78444H2	Sec.VI Att. C
AC3-DC1	Dust Collector	N/A	1979	Mikropul	221S-10-20	78444H3	Sec.VI Att. C
AC4-DC1	Dust Collector	N/A	1979	Mikropul	221S-10-20	78444H4	Sec.VI Att. C
Various enclosed screw conveyor devices							
Various air slide devices							
IX: Proportioning Silos							
F2-PS-SB1	Storage Bin	280 Tons	1949	N/A	N/A	N/A	Sec.VI Att. C
F2-PS-SB2	Storage Bin	280 Tons	1949	N/A	N/A	N/A	Sec.VI Att. C
F2-PS-SB3	Storage Bin	280 Tons	1949	N/A	N/A	N/A	Sec.VI Att. C
F2-PS-SB4	Storage Bin	280 Tons	1949	N/A	N/A	N/A	Sec.VI Att. C
F2-PS-SB5	Storage Bin	280 Tons	1949	N/A	N/A	N/A	Sec.VI Att. C
F2-PS-SB6	Storage Bin	280 Tons	1949	N/A	N/A	N/A	Sec.VI Att. C

Process Area/ Equipment ID	Type/Description	Nominal Capacity	Year Installed	Manufacturer	Model	Serial Number	Applicable Section
F2-PS-SB7	Storage Bin	280 Tons	1951	N/A	N/A	N/A	Sec.VI Att. C
F2-PS-SB8	Storage Bin	280 Tons	1951	N/A	N/A	N/A	Sec.VI Att. C
F2-PS-SB9	Storage Bin	280 Tons	1951	N/A	N/A	N/A	Sec.VI Att. C
F2-PS-SB10	Storage Bin	280 Tons	1951	N/A	N/A	N/A	Sec.VI Att. C
F2-PS-SB11	Storage Bin	280 Tons	1951	N/A	N/A	N/A	Sec.VI Att. C
F2-PS-SB12	Storage Bin	280 Tons	1951	N/A	N/A	N/A	Sec.VI Att. C
F2-POD	Pneumatic Conveyance System	125 tph	2000	MODCO	N/A	N/A	Sec.VI Att. C
F2-PS-DC1	Dust Collector	N/A	1980	Mikropul	10/8/1930	73-H-897	Sec.VI Att. C
F2-PS-DC2	Dust Collector	N/A	1980	Mikropul	10/8/1930	N/A	Sec.VI Att. C
F2-PS-DC3	Dust Collector	N/A	N/A	Mikropul	N/A	N/A	Sec.VI Att. C
AC-BE2	Bucket Elevator	100 tph	1955	N/A	N/A	N/A	Sec.VI Att. C
AC-A1	Alleviator	100 tph	2000	N/A	N/A	N/A	Sec.VI Att. C
AC-DC1	Dust Collector	N/A	2000	N/A	N/A	N/A	Sec.VI Att. C
AC-BE2-DC	Dust Collector	N/A	2000	Mikropul	64S-8-20	76615H1	Sec.VI Att. C
Various enclosed screw conveyor devices							
Various pneumatic conveying devices							
X: Kilns 1, 2, and 3 Feed Silos							
F3-KS-SB1	Silo	575 Tons	1949	N/A	N/A	N/A	Sec.VI Att. C
F3-KS-SB2	Silo	575 Tons	1949	N/A	N/A	N/A	Sec.VI Att. C
F3-KS-SB3	Silo	575 Tons	1949	N/A	N/A	N/A	Sec.VI Att. C
F3-KS-SB4	Silo	575 Tons	1951	N/A	N/A	N/A	Sec.VI Att. C
F3-KS-SB5	Silo	575 Tons	1951	N/A	N/A	N/A	Sec.VI Att. C
F3-KS-SB6	Silo	575 Tons	1951	N/A	N/A	N/A	Sec.VI Att. C
F3-KS-BE1	Bucket Elevator	100 tph	1949	N/A	N/A	N/A	Sec.VI Att. C
F3-KS-SCF	Screw Feeder	100 tph	N/A	N/A	N/A	N/A	Sec.VI Att. C
F3-KS-SB	Storage Bin	15 tons	1992	N/A	N/A	N/A	Sec.VI Att. C
F3-KS-DC1	Dust Collector	N/A	1974	Mikropul	25S-8-20B	N/A	Sec.VI Att. C
Various enclosed screw conveyor devices							

Process Area/ Equipment ID	Type/Description	Nominal Capacity	Year Installed	Manufacturer	Model	Serial Number	Applicable Section
XI: Kilns 1, 2, and 3							
H3-K1-K	Rotary Kiln	19 tph	1949	Allis Chalmers	N/A	N/A	Sec.V Att. C
H3-K2-K	Rotary Kiln	19 tph	1951	Allis Chalmers	N/A	N/A	Sec.V Att. C
H3-K3-K	Rotary Kiln	19 tph	1955	FL Smidth	N/A	N/A	Sec.V Att. C
H4-K1-FBE1	Bucket Elevator	30 tph	N/A	N/A	N/A	N/A	Sec.VI Att. C
H4-K2-FBE1	Bucket Elevator	30 tph	N/A	N/A	N/A	N/A	Sec.VI Att. C
H4-K3-FBE1	Bucket Elevator	30 tph	N/A	N/A	N/A	N/A	Sec.VI Att. C
H4-K1-DBE1	Bucket Elevator	30 tph	N/A	N/A	N/A	N/A	Sec.VI Att. C
H4-K2-DBE1	Bucket Elevator	30 tph	N/A	N/A	N/A	N/A	Sec.VI Att. C
H4-K3-DBE1	Bucket Elevator	56 tph	N/A	N/A	N/A	N/A	Sec.VI Att. C
H4-K1-CC	Cyclone	19 tph	N/A	N/A	N/A	N/A	Sec.VI Att. C
H4-K2-CC	Cyclone	19 tph	N/A	N/A	N/A	N/A	Sec.VI Att. C
H4-K3-CC	Cyclone	19 tph	N/A	N/A	N/A	N/A	Sec.VI Att. C
Kiln #1 Bin	Kiln Feed Bin	92 tons	1949	NA	N/A	N/A	Sec.VI Att. C
Kiln #2 Bin	Kiln Feed Bin	92 tons	1951	NA	N/A	N/A	Sec.VI Att. C
Kiln #3 Bin	Kiln Feed Bin	92 tons	1955	NA	N/A	N/A	Sec.VI Att. C
H5-1-SCF	Screw Feeder	19 tph	1978	N/A	N/A	N/A	Sec.VI Att. C
H5-2-SCF	Screw Feeder	19 tph	1978	N/A	N/A	N/A	Sec.VI Att. C
H5-3-SCF1	Screw Feeder	19 tph	1978	N/A	N/A	N/A	Sec.VI Att. C
H5-5-SCF1	Screw Feeder	19 tph	1978	N/A	N/A	N/A	Sec.VI Att. C
H4-K1-DC	Dust Collector	N/A	N/A	N/A	N/A	N/A	Sec.VI Att. C
H4-K2-DC	Dust Collector	N/A	1974	Mikropul	25S-8-20B	73-H-901	Sec.VI Att. C
H4-K3-DC	Dust Collector	N/A	N/A	N/A	N/A	N/A	Sec.VI Att. C
H5-5-GB-BE1	Bucket Elevator	56 tph	1978	Rexnord	N/A	N/A	Sec.VI Att. C
H5-5 Dust Bin	Dust Bin	100 tons	1971	N/A	N/A	N/A	Sec.VI Att. C
H5-5-FP1	Fuller Kinyon Dust Pump	30 tph	N/A	N/A	N/A	N/A	Sec.VI Att. C
H5-5-GB	Dust Collector	N/A	1978	ICA	5535 S12	N/A	Sec.V Att. C
H5-5-DC1	Dust Collector	N/A	1978	Mikropul	36S-8-30	N/A	Sec.VI Att. C
H5-5-DC2	Dust Collector	N/A	1978	Mikropul	36S-8-30	N/A	Sec.VI Att. C

Process Area/ Equipment ID	Type/Description	Nominal Capacity	Year Installed	Manufacturer	Model	Serial Number	Applicable Section
Various enclosed screw conveyor devices							
Various air slide devices							
Various pneumatic conveying devices							
XII. Clinker Coolers 1, 2, and 3							
H2-QC1	Clinker Cooler	19 tph	1949	Fuller	N/A	N/A	Sec.V Att. C
H2-QC2	Clinker Cooler	19 tph	1951	Fuller	N/A	N/A	Sec.V Att. C
H2-QC3	Clinker Cooler	19 tph	1955	Fuller	N/A	N/A	Sec.V Att. C
H2-KB1	Belt Conveyor	56 tph	N/A	N/A	N/A	N/A	Sec.VI Att. C
H2-KB4	Belt Conveyor	19 tph	N/A	N/A	N/A	N/A	Sec.VI Att. C
H2-K1-BE1	Bucket Elevator	19 tph	1949	N/A	N/A	N/A	Sec.VI Att. C
H2-K2-BE1	Bucket Elevator	19 tph	1955	N/A	N/A	N/A	Sec.VI Att. C
H2-K3-BE1	Bucket Elevator	19 tph	1955	N/A	N/A	N/A	Sec.VI Att. C
H2-QC1-DR1	Drag Conveyor	19 tph	N/A	N/A	N/A	N/A	Sec.VI Att. C
H2-QC2-DR1	Drag Conveyor	19 tph	N/A	N/A	N/A	N/A	Sec.VI Att. C
H2-QC3-DR1	Drag Conveyor	19 tph	N/A	N/A	N/A	N/A	Sec.VI Att. C
H2-KB1-DC	Dust Collector	N/A	1981	N/A	N/A	N/A	Sec.VI Att. C
H2-1-DC	Dust Collector	N/A	1974	WH/FRYE	108	N/A	Sec.V Att. C
H2-2-DC	Dust Collector	N/A	1974	WH/FRYE	108	N/A	Sec.V Att. C
H2-3-DC	Dust Collector	N/A	1974	WH/FRYE	108	N/A	Sec.V Att. C
H2-KB3-DC	Dust Collector	N/A	1982	WH/FRYE	N/A	N/A	Sec.VI Att. C
H2-3-DC-BE	Bucket Elevator	N/A	1974	N/A	N/A	N/A	Sec.VI Att. C
Various enclosed screw conveyor devices							
XIII: Preheater and Kiln 4							
H3-K4-BE1	Bucket Elevator	207 tph	1989	N/A	N/A	N/A	Sec.VI Att. C
H3-K4-BC1	Belt Conveyor	N/A	1989	N/A	N/A	N/A	Sec.VI Att. C
H5 Dust Bin	Dust Bin	100 tons	1971	N/A	N/A	N/A	Sec.VI Att. C
H5-BE1	Bucket Elevator	75 tph	1971	N/A	N/A	N/A	Sec.VI Att. C
H5-FP1	Fuller Kinyon Pump	27 tph	1971	N/A	N/A	N/A	Sec.VI Att. C
H5-FP2	Fuller Kinyon Pump	27 tph	1989	N/A	N/A	N/A	Sec.VI Att. C

Process Area/ Equipment ID	Type/Description	Nominal Capacity	Year Installed	Manufacturer	Model	Serial Number	Applicable Section
H3-K4-HOP	Hopper	N/A	1989	N/A	N/A	N/A	Sec.VI Att. C
H4-SB-KS	Raw Mix Bin	25 tons	1971	N/A	N/A	N/A	Sec.VI Att. C
H3-K4-K	Rotary Kiln	207 tph	1971	Allis Chalmers	N/A	N/A	Sec.V Att. C
H3-K4-SCF1	Screw Feeder	25 tph	N/A	N/A	N/A	N/A	Sec.VI Att. C
H3-K4-WF1SB	Storage Bin	10 tons	N/A	N/A	N/A	N/A	Sec.VI Att. C
H3-K4-WF2SB	Storage Bin	10 tons	N/A	N/A	N/A	N/A	Sec.VI Att. C
H3-K4-WF1	Fuel Feeder	10 tph	N/A	Pfister	N/A	N/A	Sec.VI Att. C
H3-K4-WF2	Fuel Feeder	10 tph	N/A	Pfister	N/A	N/A	Sec.VI Att. C
H4-DC1	Dust Collector	N/A	1971	Mikropul	25S-8-30B	79318	Sec.VI Att. C
H4-BS	Weighbelt Feeder	300 tph	N/A	N/A	N/A	N/A	Sec.VI Att. C
H4-Feed bin	Kiln 4 Raw Mix Bin	15 tons	1971	N/A	N/A	N/A	Sec.VI Att. C
H4-BE1	Bucket Elevator	460 tph	1971	Rex Chain Belt	N/A	N/A	Sec.VI Att. C
H4-BE2	Bucket Elevator	460 tph	1971	Rex Chain Belt	N/A	N/A	Sec.VI Att. C
H4-RF2	Rotary Airlock	150 tph	1971	N/A	N/A	N/A	Sec.VI Att. C
H4-RF3	Rotary Airlock	150 tph	1971	N/A	N/A	N/A	Sec.VI Att. C
H4-CC1A	Cyclone	150 tph	1992	N/A	N/A	N/A	Sec.VI Att. C
H4-CC1B	Cyclone	150 tph	1971, 1992	N/A	N/A	N/A	Sec.VI Att. C
H4-CC2A	Cyclone	150 tph	1971, 1992	N/A	N/A	N/A	Sec.VI Att. C
H4-CC2B	Cyclone	150 tph	1971, 1992	N/A	N/A	N/A	Sec.VI Att. C
H4-CC3A	Cyclone	150 tph	1971, 1992	N/A	N/A	N/A	Sec.VI Att. C
H4-CC3B	Cyclone	150 tph	1971, 1992	N/A	N/A	N/A	Sec.VI Att. C
H4-CC4A	Cyclone	150 tph	1971, 1992	N/A	N/A	N/A	Sec.VI Att. C
Preheater	Preheater	207 tph	1971	Allis Chalmers	N/A	N/A	Sec.VI Att. C
Preheater	Calciner	207 tph	1985	Allis Chalmers	N/A	N/A	Sec.VI Att. C
H3-K4-DC1	Dust Collector	N/A	1990	Mikropul	N/A	N/A	Sec.IV/VI Att. C
H3-K4-DC2	Dust Collector	N/A	1990	Mikropul	N/A	N/A	Sec.IV/VI Att. C
H5-DC1	Dust Collector	N/A	1972	N/A	N/A	N/A	Sec.VI Att. C
H5-GB	Dust Collector	N/A	1972	Western Precipitation	CHP-SP-N	N/A	Sec.V Att. C
Various enclosed screw conveyor devices							

Process Area/ Equipment ID	Type/Description	Nominal Capacity	Year Installed	Manufacturer	Model	Serial Number	Applicable Section
XIV: Clinker Cooler 4							
H2-QC4	Clinker Cooler	207 tph	1971	Fuller	306X343	N/A	Sec.VI Att. C
H2-PF1	Pan Feeder	207 tph	2000	Rexnord	N/A	N/A	Sec.VI Att. C
H2-PF2	Pan Feeder	207 tph	2000	Magaldi	N/A	N/A	Sec.VI Att. C
H2-BE1	Bucket Elevator	207 tph	2003	N/A	N/A	N/A	Sec.VI Att. C
H2-DR1	Drag Conveyor	207 tph	1971	N/A	N/A	N/A	Sec.VI Att. C
H2-SB1	Storage Bin	100 tons	2003	N/A	N/A	N/A	Sec.VI Att. C
H2-GB	Dust Collector	N/A	1971	Wheelabrator	126	A-125748	Sec.V Att. C
H2-DC1	Dust Collector	N/A	1971	Mikropul	80S-8-20	72-H-588	Sec.VI Att. C
H2-DC2	Dust Collector	N/A	2000 2002	Mikropul	1F4	N/A	Sec.VI Att. C
H2-DC3	Dust Collector	N/A	2003	Amerex	RP-12-9-D6	N/A	Sec.VI Att. C
Various enclosed screw conveyor devices							
XV: Clinker/Gypsum Transport and Finish Mill Feed Bins							
C2-BC5	Belt Conveyor	155 tph	1971	Rex Chain Belt	N/A	N/A	Sec.VI Att. C
C2-BC6	Belt Conveyor	155 tph	1977	N/A	N/A	N/A	Sec.VI Att. C
C2-BC6A	Belt Conveyor	155 tph	1977	N/A	N/A	N/A	Sec.VI Att. C
C2-BC8	Belt Conveyor	155 tph	1971	Rex Chain Belt	N/A	N/A	Sec.VI Att. C
C2-BC9	Belt Conveyor	155 tph	1971	Rex Chain Belt	N/A	N/A	Sec.VI Att. C
C2-BC10	Belt Conveyor	155 tph	1971	Rex Chain Belt	N/A	N/A	Sec.VI Att. C
C2-BC11	Belt Conveyor	155 tph	1977	N/A	N/A	N/A	Sec.VI Att. C
C2-BC11A	Belt Conveyor	155 tph	1977	N/A	N/A	N/A	Sec.VI Att. C
D2-BC1	Belt Conveyor	155 tph	1971	Rex Chain Belt	N/A	N/A	Sec.VI Att. C
D2-BC2	Belt Conveyor	155 tph	2001	Rex Chain Belt	N/A	N/A	Sec.VI Att. C
D2-BC6	Belt Conveyor	155 tph	2001	Rex Chain Belt	N/A	N/A	Sec.VI Att. C
C2-BC5-BS	Belt Scale	155 tph	1998	Thayer	N/A	N/A	Sec.VI Att. C
D2-BS1	Belt Scale	155 tph	1971	Merrick	430	WLL9699	Sec.VI Att. C
D2-BS2	Belt Scale	155 tph	1971	Merrick	430	WLL9696	Sec.VI Att. C
D2-BS3	Belt Scale	155 tph	1971	Merrick	430	WLL9701	Sec.VI Att. C

Process Area/ Equipment ID	Type/Description	Nominal Capacity	Year Installed	Manufacturer	Model	Serial Number	Applicable Section
D2-BS4	Belt Scale	155 tph	1971	Merrick	430	WLL9698	Sec.VI Att. C
D2-BS5	Belt Scale	155 tph	1971	Merrick	430	WLL9700	Sec.VI Att. C
D2-BS6	Belt Scale	155 tph	1971	Merrick	430	WLL9697	Sec.VI Att. C
C2-SB1	Storage Bin	360 tons	1971	N/A	N/A	N/A	Sec.VI Att. C
C2-SB2	Storage Bin	360 tons	1971	N/A	N/A	N/A	Sec.VI Att. C
C2-SB3	Storage Bin	360 tons	1971	N/A	N/A	N/A	Sec.VI Att. C
C2-SB4	Storage Bin	360 tons	1971	N/A	N/A	N/A	Sec.VI Att. C
C2-SB5	Storage Bin	360 tons	1971	N/A	N/A	N/A	Sec.VI Att. C
C2-SB6	Storage Bin	360 tons	1971	N/A	N/A	N/A	Sec.VI Att. C
C2-VF1	Vibrating Feeder	155 tph	1971	N/A	N/A	N/A	Sec.VI Att. C
C2-DC2	Dust Collector	N/A	1971	Mikropul	36S-8-30	71-H-632	Sec.VI Att. C
C2-DC4	Dust Collector	N/A	1971	Mikropul	36S-8-30	71-H-1622	Sec.VI Att. C
C2-DC5	Dust Collector	N/A	1971	Mikropul	25S-8-30	71-H-394	Sec.VI Att. C
C2-DC6	Dust Collector	N/A	1971	Mikropul	25S-8-30	71-H-395	Sec.VI Att. C
C2-DC7	Dust Collector	N/A	1971	Mikropul	25S-8-30	71-H-396	Sec.VI Att. C
C2-DC8	Dust Collector	N/A	1971	Mikropul	25S-8-30	71-H-397	Sec.VI Att. C
C2-DC9	Dust Collector	N/A	1971	Mikropul	25S-8-30	71-H-398	Sec.VI Att. C
C2-DC10	Dust Collector	N/A	1971	Mikropul	25S-8-30	71-H-399	Sec.VI Att. C
C2-DC11	Dust Collector	N/A	1971	Mikropul	36S-8-30	71-H-633	Sec.VI Att. C
C2-DC12	Dust Collector	N/A	1986	Mikropul	25S-10-30	870085H1	Sec.VI Att. C
C2-DC13	Dust Collector	N/A	1986	Mikropul	25S-10-30	870085H2	Sec.VI Att. C
D2-DC1	Dust Collector	N/A	1971	Mikropul	1F2	71-H-816	Sec.VI Att. C
D2-DC3	Dust Collector	N/A	1971	Mikropul	36S-8-30	71-H-822	Sec.VI Att. C
Various enclosed screw conveyor devices							
XVI: Finish Milling - CM Area							
CM7-BC1	Belt Conveyor	69 tph	N/A	N/A	N/A	N/A	Sec.VI Att. C
CM7-BS1	Belt Scale	69 tph	2003	N/A	N/A	N/A	Sec.VI Att. C
CM7-BS2	Belt Scale	69 tph	2009	Merrick	465	465-MC^3-30848	Sec.VI Att. C

Process Area/ Equipment ID	Type/Description	Nominal Capacity	Year Installed	Manufacturer	Model	Serial Number	Applicable Section
CM7-BS3	Belt Scale	69 tph	2009	Merrick	465	465-MC^3-30849	Sec.VI Att. C
CM-BC1	Belt Conveyor	100 tph	N/A	N/A	N/A	N/A	Sec.VI Att. C
CM-BS1	Belt Scale	100 tph	1996	Merrick	450	450-MC^2-22296	Sec.VI Att. C
CM-BS2	Belt Scale	15 tph	1996	Merrick	450	450-MC^2-22295	Sec.VI Att. C
CM-BS3	Belt Scale	15 tph	2004	N/A	N/A	N/A	Sec.VI Att. C
CM1-BE1	Bucket Elevator	10 tph	1949	N/A	N/A	N/A	Sec.VI Att. C
CM2-BE1	Bucket Elevator	10 tph	1949	N/A	N/A	N/A	Sec.VI Att. C
CM3-BE1	Bucket Elevator	10 tph	1951	N/A	N/A	N/A	Sec.VI Att. C
CM4-BE1	Bucket Elevator	10 tph	1955	N/A	N/A	N/A	Sec.VI Att. C
CM5-BE1	Bucket Elevator	10 tph	1955	N/A	N/A	N/A	Sec.VI Att. C
CM6-BE1	Bucket Elevator	10 tph	1960	N/A	N/A	N/A	Sec.VI Att. C
CM7-BE1	Bucket Elevator	69 tph	1969	Rexnord	N/A	N/A	Sec.VI Att. C
CM7-BE2	Bucket Elevator	69 tph	1997	Rexnord	2120M-01	G33315	Sec.VI Att. C
CM-BE1	Bucket Elevator	60 tph	1969	N/A	N/A	N/A	Sec.VI Att. C
CM-BE4	Bucket Elevator	60 tph	1949	N/A	N/A	N/A	Sec.VI Att. C
CM-DR1	Drag Conveyor	60 tph	1959	N/A	N/A	N/A	Sec.VI Att. C
CM-DR2	Drag Conveyor	60 tph	1949	N/A	N/A	N/A	Sec.VI Att. C
CM-DR	Drag Conveyor	60 tph	1996	Kase	N/A	D-96H40-01	Sec.VI Att. C
CM-FP1	Pneumatic Conveyor	20 tph	1949	N/A	N/A	N/A	Sec.VI Att. C
CM-FP2	Pneumatic Conveyor	35 tph	1955	N/A	N/A	N/A	Sec.VI Att. C
CM-FP3	Pneumatic Conveyor	69 tph	1999	Fuller	200M, 110	200-M-98-10235	Sec.VI Att. C
CM1-M	Mill	10 tph	1949	Allis Chalmers	N/A	N/A	Sec.VI Att. C
CM2-M	Mill	10 tph	1949	Allis Chalmers	N/A	N/A	Sec.VI Att. C
CM3-M	Mill	10 tph	1951	Allis Chalmers	N/A	N/A	Sec.VI Att. C
CM4-M	Mill	10 tph	1955	Allis Chalmers	N/A	N/A	Sec.VI Att. C
CM5-M	Mill	10 tph	1955	Allis Chalmers	N/A	N/A	Sec.VI Att. C
CM6-M	Mill	10 tph	1960	Allis Chalmers	N/A	N/A	Sec.VI Att. C
CM7-M	Mill	69 tph	1969	Fuller	N/A	B11915	Sec.VI Att. C
CM7-CX	Mill Cooler	69 tph	1969	Fuller	N/A	N/A	Sec.VI Att. C

Process Area/ Equipment ID	Type/Description	Nominal Capacity	Year Installed	Manufacturer	Model	Serial Number	Applicable Section
CM7-RP1	Roll Crusher	69 tph	1969	N/A	N/A	N/A	Sec.VI Att. C
CM7-RP2	Roll Crusher	69 tph	1969	N/A	N/A	N/A	Sec.VI Att. C
CM1-BS1	Belt Scale	10 tph	1998	Merrick	450	450-MC^2-23473	Sec.VI Att. C
CM2-BS1	Belt Scale	10 tph	N/A	N/A	N/A	N/A	Sec.VI Att. C
CM3-BS1	Belt Scale	10 tph	N/A	N/A	N/A	N/A	Sec.VI Att. C
CM4-BS1	Belt Scale	10 tph	N/A	N/A	N/A	N/A	Sec.VI Att. C
CM5-BS1	Belt Scale	10 tph	N/A	N/A	N/A	N/A	Sec.VI Att. C
CM6-BS1	Belt Scale	10 tph	N/A	N/A	N/A	N/A	Sec.VI Att. C
CM-MA-SCF1	Screw Feeder	69 tph	N/A	N/A	N/A	N/A	Sec.VI Att. C
CM-MA-SCF2	Screw Feeder	69 tph	N/A	N/A	N/A	N/A	Sec.VI Att. C
CM-MA-SCF3	Screw Feeder	69 tph	N/A	N/A	N/A	N/A	Sec.VI Att. C
CM1-SS	Separator	10 tph	1949	Sturtevant	N/A	N/A	Sec.VI Att. C
CM2-SS	Separator	10 tph	1949	Sturtevant	N/A	N/A	Sec.VI Att. C
CM3-SS	Separator	10 tph	1951	Sturtevant	N/A	N/A	Sec.VI Att. C
CM4-SS	Separator	10 tph	1955	Sturtevant	N/A	N/A	Sec.VI Att. C
CM5-SS	Separator	10 tph	1955	Sturtevant	N/A	N/A	Sec.VI Att. C
CM6-SS	Separator	10 tph	1960	Sturtevant	N/A	N/A	Sec.VI Att. C
CM7-SS	Separator	69 tph	1997	Polysius	185/0	N/A	Sec.VI Att. C
CM7 Clinker Bin	Storage Bin	N/A	1969	N/A	N/A	N/A	Sec.VI Att. C
CM7 Gypsum Bin	Storage Bin	N/A	1969	N/A	N/A	N/A	Sec.VI Att. C
CM7 Limestone Bin	Storage Bin	N/A	1983	N/A	N/A	N/A	Sec.VI Att. C
CM-MA-BIN1	Storage Silo	100 tons	1970	N/A	N/A	N/A	Sec.VI Att. C
CM-MA-BIN2	Storage Silo	100 tons	1970	N/A	N/A	N/A	Sec.VI Att. C
CM-MA-BIN3	Storage Silo	230 tons	1970	N/A	N/A	N/A	Sec.VI Att. C
CM1-SB	Storage Bin	N/A	1949	N/A	N/A	N/A	Sec.VI Att. C
CM2-SB	Storage Bin	N/A	1949	N/A	N/A	N/A	Sec.VI Att. C
CM3-SB	Storage Bin	N/A	1951	N/A	N/A	N/A	Sec.VI Att. C
CM4-SB	Storage Bin	N/A	1955	N/A	N/A	N/A	Sec.VI Att. C
CM5-SB	Storage Bin	N/A	1955	N/A	N/A	N/A	Sec.VI Att. C

Process Area/ Equipment ID	Type/Description	Nominal Capacity	Year Installed	Manufacturer	Model	Serial Number	Applicable Section
CM6-SB	Storage Bin	N/A	1960	N/A	N/A	N/A	Sec.VI Att. C
CM2-BS1-VF1	Vibrating Feeder	10 tph	1949	N/A	N/A	N/A	Sec.VI Att. C
CM3-BS1-VF1	Vibrating Feeder	10 tph	1951	N/A	N/A	N/A	Sec.VI Att. C
CM4-BS1-VF1	Vibrating Feeder	10 tph	1955	N/A	N/A	N/A	Sec.VI Att. C
CM5-BS1-VF1	Vibrating Feeder	10 tph	1955	N/A	N/A	N/A	Sec.VI Att. C
CM6-BS1-VF1	Vibrating Feeder	10 tph	1960	N/A	N/A	N/A	Sec.VI Att. C
CM7-BS1-VF1	Vibrating Feeder	69 tph	1969	N/A	N/A	N/A	Sec.VI Att. C
CM1-DC1	Dust Collector	N/A	1979	Mikropul	221S-10-TR	79287	Sec.VI Att. C
CM2-DC1	Dust Collector	N/A	1979	Mikropul	221S-10-TR	72289	Sec.VI Att. C
CM3-DC1	Dust Collector	N/A	1979	Mikropul	221S-10-TR	80295	Sec.VI Att. C
CM4-DC1	Dust Collector	N/A	1979	Mikropul	221S-10-TR	79288	Sec.VI Att. C
CM5-DC1	Dust Collector	N/A	1980	Mikropul	221S-10-TR	80296	Sec.VI Att. C
CM6-DC1	Dust Collector	N/A	1979	Mikropul	221S-10-TR	79290	Sec.VI Att. C
CM7-DC1	Dust Collector	N/A	1997	Amerex	RP-12-240, D6	1597-100	Sec.VI Att. C
CM7-DC2	Dust Collector	N/A	1999	Amerex	RP-12-90	1597	Sec.VI Att. C
CM7-DC3	Product Collector	N/A	1997	Amerex	RP-12-675, D6	1597-102	Sec.VI Att. C
CM-DC4	Dust Collector	N/A	1982	Mikropul	221S-8-20	82127H1	Sec.VI Att. C
CM-DC5	Dust Collector	N/A	1979	Mikropul	512K8	78416	Sec.VI Att. C
CM-MA-DC1	Dust Collector	N/A	1970	Mikropul	16S-8-30	270-H-250	Sec.VI Att. C
Various enclosed screw conveyor devices							
Various airslide devices							
Various pneumatic conveying devices							
XVII: Finish Milling - D2 Area							
D2-1-BE3	Bucket Elevator	155 tph	1971	Rex Chain Belt	N/A	N/A	Sec.VI Att. C
D2-1-BE4	Bucket Elevator	155 tph	1971	Rex Chain Belt	N/A	N/A	Sec.VI Att. C
D2-1-BC1	Belt Conveyor	155 tph	1971	Rex Chain Belt	N/A	N/A	Sec.VI Att. C
D2-FP1	Pneumatic Pump	155 tph	2001	Fuller	N/A	N/A	Sec.VI Att. C
D2-1-M	Mill	155 tph	1971	Allis Chalmers	N/A	B-16786	Sec.VI Att. C
D2-1-SS	Separator	155 tph	2001	Polysius	Sepol 290	N/A	Sec.VI Att. C
D2-PC	Product Collector	N/A	2001	N/A	N/A	N/A	Sec.VI Att. C
D2-DC4	Dust Collector	N/A	2001	N/A	N/A	N/A	Sec.VI Att. C

Process Area/ Equipment ID	Type/Description	Nominal Capacity	Year Installed	Manufacturer	Model	Serial Number	Applicable Section
D2-1-DC1	Dust Collector	N/A	1975	Mikropul	283-96	71-H-612	Sec.VI Att. C
Various airslide devices							
XVIII: Finish Milling - D3 Area							
D3-1-AS5BMT	Material Trap	150 tph	1998	Polysius	N/A	N/A	Sec.VI Att. C
D3-1-RS1	Rotary Screen	150 tph	2006	Vroom	N/A	N/A	Sec.VI Att. C
D3-1-BC1	Belt Conveyor	150 tph	1987	FEECO	N/A	N/A	Sec.VI Att. C
D3-1-BC2	Belt Conveyor	150 tph	1992	FEECO	N/A	N/A	Sec.VI Att. C
D3-1-BC3	Belt Conveyor	150 tph	1992	FEECO	N/A	N/A	Sec.VI Att. C
D3-1-BC4	Belt Conveyor	150 tph	1992	FEECO	N/A	N/A	Sec.VI Att. C
D3-1-BS1	Belt Scale	150 tph	1988	Thayer	N/A	N/A	Sec.VI Att. C
D3-1-BS2	Belt Scale	150 tph	1974	Merrick	N/A	N/A	Sec.VI Att. C
D3-1-BC2-BS	Belt Scale	150 tph	1992	Milltronics	N/A	N/A	Sec.VI Att. C
D3-1-BE1	Bucket Elevator	450 tph	1987	Rexnord	N/A	N/A	Sec.VI Att. C
D3-1-BE2	Bucket Elevator	150 tph	1974	Rexnord	N/A	N/A	Sec.VI Att. C
D3-1-BE3	Bucket Elevator	150 tph	1974	Rexnord	N/A	N/A	Sec.VI Att. C
D3-1-BE4	Bucket Elevator	150 tph	1974	Rexnord	N/A	N/A	Sec.VI Att. C
D3-1-BE5	Bucket Elevator	150 tph	1987	Rexnord	N/A	N/A	Sec.VI Att. C
D3-1-CX	Cement Cooler	150 tph	1974	Fuller	N/A	N/A	Sec.VI Att. C
D3-1-FP1	Pneumatic Pump	150 tph	1987	Fuller	N/A	N/A	Sec.VI Att. C
D3-1-M	Finish Mill	150 tph	1974	Allis Chalmers	N/A	B40131	Sec.VI Att. C
D3-1-HRP1	Roll Press	150 tph	1987	Polysius	N/A	450-4	Sec.VI Att. C
D3-1-HRP2	Roll Press	150 tph	1987	Polysius	N/A	N/A	Sec.VI Att. C
D3-1-SS	Separator	150 tph	1999	Polysius	Sepol 290	N/A	Sec.VI Att. C
D3-1-SB1	Storage Bin	150 tph	1974	N/A	N/A	N/A	Sec.VI Att. C
D3-1-SB2	Storage Bin	150 tph	1974	N/A	N/A	N/A	Sec.VI Att. C
D3-1-VB1	Variable Feeder	150 tph	2000	Kinergy	N/A	N/A	Sec.VI Att. C
D3-1-BC5-HOP	Hopper	150 tons	2004	N/A	N/A	N/A	Sec.VI Att. C
D3-1-BC5	Belt Feeder	15 tph	2004	Schenck	N/A	N/A	Sec.VI Att. C
D3-1-DC1	Dust Collector	N/A	1974	Mikropul	2G3-96	72-H-2337	Sec.VI Att. C
D3-1-DC2	Product Collector	N/A	1987	Mikropul	720J-10-20-TR	860520H1-H2	Sec.VI Att. C

Process Area/ Equipment ID	Type/Description	Nominal Capacity	Year Installed	Manufacturer	Model	Serial Number	Applicable Section
D3-1-DC3	Dust Collector	N/A	1987	Mikropul	289S-10-20-TR	860520H3	Sec.VI Att. C
Various enclosed screw conveyor devices							
Various air slide devices.							
Various pneumatic conveying devices.							
XIX: Product Storage and Bulk Loadout							
CM-A1	Alleviator	276 tph	1970	N/A	N/A	N/A	Sec.VI Att. C
CM-A2	Alleviator	276 tph	1971	N/A	N/A	N/A	Sec.VI Att. C
CM-A3	Alleviator	276 tph	1971	N/A	N/A	N/A	Sec.VI Att. C
CM-A4	Alleviator	276 tph	1971	N/A	N/A	N/A	Sec.VI Att. C
CM-A5	Alleviator	276 tph	1971	N/A	N/A	N/A	Sec.VI Att. C
BL-BE1	Bucket Elevator	450 tph	1960	N/A	N/A	N/A	Sec.VI Att. C
BL-BE2	Bucket Elevator	450 tph	1960	N/A	N/A	N/A	Sec.VI Att. C
BL-BE3	Bucket Elevator	450 tph	1998	Rexnord	1636	1636-2613G	Sec.VI Att. C
BL-RS1	Rotary Screen	276 tph	1960	N/A	N/A	N/A	Sec.VI Att. C
BL-RS2	Rotary Screen	276 tph	1960	N/A	N/A	N/A	Sec.VI Att. C
BL-RS3	Rotary Screen	276 tph	1997	N/A	N/A	N/A	Sec.VI Att. C
BL-SB1	Storage Bin	150 Tons	1960	N/A	N/A	N/A	Sec.VI Att. C
BL-SB2	Storage Bin	150 Tons	1960	N/A	N/A	N/A	Sec.VI Att. C
BL-SB3	Storage Bin	150 Tons	1960	N/A	N/A	N/A	Sec.VI Att. C
BL-SB4	Storage Bin	150 Tons	1960	N/A	N/A	N/A	Sec.VI Att. C
BL-SB5	Storage Bin	850 Tons	1960	N/A	N/A	N/A	Sec.VI Att. C
BL-SB6	Storage Bin	100 tons	1960	N/A	N/A	N/A	Sec.VI Att. C
CS-SB1	Storage Silo	1300 Tons	1955	N/A	N/A	N/A	Sec.VI Att. C
CS-SB2	Storage Silo	1300 Tons	1955	N/A	N/A	N/A	Sec.VI Att. C
CS-SB3	Storage Silo	1300 Tons	1955	N/A	N/A	N/A	Sec.VI Att. C
CS-SB4	Storage Silo	1300 Tons	1955	N/A	N/A	N/A	Sec.VI Att. C
CS-SB5	Storage Silo	1300 Tons	1955	N/A	N/A	N/A	Sec.VI Att. C
CS-SB6	Storage Silo	1300 Tons	1955	N/A	N/A	N/A	Sec.VI Att. C
CS-SB7	Storage Silo	1300 Tons	1955	N/A	N/A	N/A	Sec.VI Att. C
CS-SB8	Storage Silo	1300 Tons	1955	N/A	N/A	N/A	Sec.VI Att. C
CS-SB9	Storage Silo	1300 Tons	1955	N/A	N/A	N/A	Sec.VI Att. C

Process Area/ Equipment ID	Type/Description	Nominal Capacity	Year Installed	Manufacturer	Model	Serial Number	Applicable Section
CS-SB10	Storage Silo	1300 Tons	1955	N/A	N/A	N/A	Sec.VI Att. C
CS-SB11	Storage Silo	1300 Tons	1955	N/A	N/A	N/A	Sec.VI Att. C
CS-SB12	Storage Silo	1300 Tons	1955	N/A	N/A	N/A	Sec.VI Att. C
CS-SB13	Storage Silo	1300 Tons	1955	N/A	N/A	N/A	Sec.VI Att. C
CS-SB14	Storage Silo	1300 Tons	1955	N/A	N/A	N/A	Sec.VI Att. C
CS-SB15	Storage Silo	1300 Tons	1955	N/A	N/A	N/A	Sec.VI Att. C
CS-SB16	Storage Silo	1300 Tons	1955	N/A	N/A	N/A	Sec.VI Att. C
CS-SB17	Storage Silo	1300 Tons	1955	N/A	N/A	N/A	Sec.VI Att. C
CS-SB18	Storage Silo	1300 Tons	1955	N/A	N/A	N/A	Sec.VI Att. C
CS-SB19	Storage Silo	3100 Tons	1960	N/A	N/A	N/A	Sec.VI Att. C
CS-SB20	Storage Silo	3100 Tons	1960	N/A	N/A	N/A	Sec.VI Att. C
CS-SB21	Storage Silo	3100 Tons	1960	N/A	N/A	N/A	Sec.VI Att. C
CS-SB22	Storage Silo	3100 Tons	1960	N/A	N/A	N/A	Sec.VI Att. C
CS-SB23	Storage Silo	3100 Tons	1960	N/A	N/A	N/A	Sec.VI Att. C
BL-SB5-DC1	Dust Collector	N/A	1974	Mikropul	36S-8-30	N/A	Sec.VI Att. C
BL-SB5-DC2	Dust Collector	N/A	1980	Mikropul	25S-8-30	79261H	Sec.VI Att. C
BL-SB5-DC3	Dust Collector	N/A	1980	Mikropul	25S-8-30	79318H1	Sec.VI Att. C
BL-DC1	Dust Collector	N/A	1984	Mikropul	49S-8-20	845034H1	Sec.VI Att. C
BL-DC2	Dust Collector	N/A	1984	Mikropul	49S-8-20	845038H1	Sec.VI Att. C
BL-DC3	Dust Collector	N/A	1984	Mikropul	100S-8-20	845060H1	Sec.VI Att. C
BL-DC4	Dust Collector	N/A	1984	Mikropul	100S-8-20	845060H2	Sec.VI Att. C
BL-DC5	Dust Collector	N/A	2001	Mikropul	49-S-10-20-TR	201087-H1	Sec.VI Att. C
BL-DC6	Dust Collector	N/A	1986	Mikropul	100S-8-20	860058	Sec.VI Att. C
BL-DC7	Dust Collector	N/A	1984	Mikropul	49S-10-20B	79545H1	Sec.VI Att. C
CM-DC8	Dust Collector	N/A	1980	Mikropul	144S-6-20	76583H1	Sec.VI Att. C
CM-DC9	Dust Collector	N/A	1973	Mikropul	130S-8-20	71-H-1179	Sec.VI Att. C
CM-DC10	Dust Collector	N/A	1973	Mikropul	130S-8-20	71-H-117~~9~~ 8	Sec.VI Att. C
CM-DC11	Dust Collector	N/A	1973	Mikropul	130S-8-20	71-H-1180	Sec.VI Att. C
CM-DC12	Dust Collector	N/A	1973	Mikropul	130S-8-20	71-H-1981	Sec.VI Att. C
CM-DC14	Dust Collector	N/A	1987	Fuller	196C10	N/A	Sec.VI Att. C
CM-DC15	Dust Collector	N/A	1987	Fuller	196C10	N/A	Sec.VI Att. C

Process Area/ Equipment ID	Type/Description	Nominal Capacity	Year Installed	Manufacturer	Model	Serial Number	Applicable Section
CM-DC16	Dust Collector	N/A	1987	Fuller	196C10	N/A	Sec.VI Att. C
CM-DC17	Dust Collector	N/A	2001	Fuller	N/A	N/A	Sec.VI Att. C
Various enclosed screw conveyor devices							
Various air slide devices							
XX: Cement Packhouse							
PH-PK3-BC1	Belt Conveyor	276 tph	N/A	N/A	N/A	N/A	Sec.VI Att. C
PH-PK3-BC2	Belt Conveyor	276 tph	1950	N/A	N/A	N/A	Sec.VI Att. C
PH-PK3-BC4	Belt Conveyor	276 tph	1950	N/A	N/A	N/A	Sec.VI Att. C
PH-PK3-BC5	Belt Conveyor	276 tph	1950	N/A	N/A	N/A	Sec.VI Att. C
PH-PK4-BC1	Belt Conveyor	276 tph	1950	N/A	N/A	N/A	Sec.VI Att. C
PH-BC2	Belt Conveyor	276 tph	1950	N/A	N/A	N/A	Sec.VI Att. C
PH-PZ2-BC1	Belt Conveyor	276 tph	1999	Mollers	N/A	N/A	Sec.VI Att. C
PH-PZ2-BC2	Belt Conveyor	276 tph	1999	Mollers	N/A	N/A	Sec.VI Att. C
PH-PZ2-BC3	Belt Conveyor	276 tph	1999	Mollers	N/A	N/A	Sec.VI Att. C
PH-PZ2-BC4	Belt Conveyor	276 tph	1999	Mollers	N/A	N/A	Sec.VI Att. C
PH-PZ2-BC5	Belt Conveyor	276 tph	1999	Mollers	N/A	N/A	Sec.VI Att. C
PH-BE1	Bucket Elevator	276 tph	1948	N/A	N/A	N/A	Sec.VI Att. C
PH-BE2	Bucket Elevator	276 tph	1952	N/A	N/A	N/A	Sec.VI Att. C
PH-FP1	Pneumatic Conveyor	276 tph	N/A	N/A	N/A	N/A	Sec.VI Att. C
PH-PK3	Cement Packer	276 tph	2003	Mollers	N/A	N/A	Sec.VI Att. C
PH-PK4	Cement Packer	276 tph	1950	St. Regis	N/A	N/A	Sec.VI Att. C
PH-PZ2	Palletizer	N/A	1999	Mollers	N/A	N/A	Sec.VI Att. C
PH-PZ3	Palletizer	N/A	1999	St. Regis	N/A	N/A	Sec.VI Att. C
PH-PZ2-GRC	Roller Conveyor	276 tph	1999	Mollers	N/A	N/A	Sec.VI Att. C
PH-PZ2-PRC1	Roller Conveyor	276 tph	1999	Mollers	N/A	N/A	Sec.VI Att. C
PH-PZ2-PRC2	Roller Conveyor	276 tph	1999	Mollers	N/A	N/A	Sec.VI Att. C
PH-RS1	Rotary Screen	276 tph	N/A	N/A	N/A	N/A	Sec.VI Att. C
PH-RS2	Rotary Screen	276 tph	N/A	N/A	N/A	N/A	Sec.VI Att. C
PH-PK3-SE1A	Stack Elevator	276 tph	1950	St. Regis	N/A	N/A	Sec.VI Att. C
PH-PK3-SE1B	Stack Elevator	276 tph	1950	St. Regis	N/A	N/A	Sec.VI Att. C

Process Area/ Equipment ID	Type/Description	Nominal Capacity	Year Installed	Manufacturer	Model	Serial Number	Applicable Section
PH-PZ2-SE1A	Sack Elevator	276 tph	N/A	St. Regis	N/A	N/A	Sec.VI Att. C
PH-PZ2-SE1B	Sack Elevator	276 tph	N/A	St. Regis	N/A	N/A	Sec.VI Att. C
PH-SB1	Storage Bin	N/A	N/A	N/A	N/A	N/A	Sec.VI Att. C
PH-SB2	Storage Bin	N/A	N/A	N/A	N/A	N/A	Sec.VI Att. C
PH-DC1	Dust Collector	N/A	1979	Mikropul	144S-10-20	79296H1	Sec.VI Att. C
PH-DC2	Dust Collector	N/A	1979	Mikropul	144S-10-20	79296H2	Sec.VI Att. C
PH-DC3	Dust Collector	N/A	1985	Mikropul	100S-8-20	855258H1	Sec.VI Att. C
PH-DC4	Dust Collector	N/A	1985	Mikropul	100S-8-20	855259	Sec.VI Att. C
PH-DC5	Dust Collector	N/A	1975	Mikropul	100S-8-20	N/A	Sec.VI Att. C
Various enclosed screw conveyor devices							
Various air slide devices							
Various pneumatic conveying devices							
XXI: Solid Fuel (Coal/Coke) System							
R6-BC1	Belt Conveyor	150 tph	Pre Oct. 1974	Thomas Conveyors	N/A	N/A	Sec.IV Att. C
R6-BC2	Belt Conveyor	100 tph	Pre Oct. 1974	Thomas Conveyors	N/A	N/A	Sec.IV Att. C
R6-BC3	Belt Conveyor	100 tph	Pre Oct. 1974	Thomas Conveyors	N/A	N/A	Sec.IV Att. C
R6-BS1	Belt Scale	50 tph	1993	Thayer	N/A	N/A	Sec.IV Att. C
R6-BC3-BS	Belt Scale	50 tph	1994	Thayer	N/A	N/A	Sec.IV Att. C
H3-K1-CM	Coal Mill	10 tph	Pre Oct. 1974	C. E. Raymond	493	N/A	Sec.IV Att. C
H3-K2-CM	Coal Mill	10 tph	Pre Oct. 1974	C. E. Raymond	493	N/A	Sec.IV Att. C
H3-K3-CM	Coal Mill	10 tph	Pre Oct. 1974	C. E. Raymond	493	N/A	Sec.IV Att. C
H3-K4-CM	Coal Mill	25 tph	Pre Oct. 1974	C. E. Raymond	713	N/A	Sec.IV Att. C
H3-K4-CM-SS	Separator	25 tph	2002	Alstom Prehater	N/A	N/A	Sec.IV Att. C
H3-K1-CM-CC	Cyclone	10 tph	Pre Oct. 1974	C.E. Raymond	N/A	N/A	Sec.IV Att. C
H3-K2-CM-CC	Cyclone	10 tph	Pre Oct. 1974	C.E. Raymond	N/A	N/A	Sec.IV Att. C
H3-K3-CM-CC	Cyclone	10 tph	Pre Oct. 1974	C.E. Raymond	N/A	N/A	Sec.IV Att. C
H3-K4-CM-CC	Cyclone	25 tph	Pre Oct. 1974	C.E. Raymond	N/A	N/A	Sec.IV Att. C
R6-HOP	Hopper	50 tons	1994	N/A	N/A	N/A	Sec.IV Att. C

Process Area/ Equipment ID	Type/Description	Nominal Capacity	Year Installed	Manufacturer	Model	Serial Number	Applicable Section
R6-IC1	Impact Crusher	50 tph	2009	Pennsylvania Crusher	TKK 26x30	N/A	Sec IV Att. C
R6-SCF1	Screw Feeder	50 tph	1994	N/A	N/A	N/A	Sec.IV Att. C
R6-SB	Silo	2500 tons	Pre Oct. 1974	N/A	N/A	N/A	Sec.IV Att. C
H3-K1-CM-SB	Storage Bin	54 tons	Pre Oct. 1974	N/A	N/A	N/A	Sec.IV Att. C
H3-K2-CM-SB	Storage Bin	54 tons	Pre Oct. 1974	N/A	N/A	N/A	Sec.IV Att. C
H3-K3-CM-SB	Storage Bin	54 tons	Pre Oct. 1974	N/A	N/A	N/A	Sec.IV Att. C
H3-K4-CM-SB	Storage Bin	150 tons	Pre Oct. 1974	N/A	N/A	N/A	Sec.IV Att. C
R6-VF1	Vibrating Feed Hopper	200 tph	2003	Kinergy	KDF-30-HD	KDF-7228	Sec.IV Att. C
R6-VF2	Vibrating Feed Hopper	50 tph	2003	Kinergy	KDF-30-HD	KDF-7229	Sec.IV Att. C
R6-VF3	Vibrating Feed Hopper	50 tph	Pre Oct. 1974	N/A	N/A	N/A	Sec.IV Att. C
R6-VF4	Vibrating Feed Hopper	50 tph	Pre Oct. 1974	N/A	N/A	N/A	Sec.IV Att. C
R6-VF5	Vibrating Feed Hopper	50 tph	Pre Oct. 1974	N/A	N/A	N/A	Sec.IV Att. C
R6-BA1	Vibrating Feeder	50 tph	Pre Oct. 1974	N/A	N/A	N/A	Sec.IV Att. C
R6-BA2	Vibrating Feeder	50 tph	Pre Oct. 1974	N/A	N/A	N/A	Sec.IV Att. C
R6-BA3	Vibrating Feeder	50 tph	Pre Oct. 1974	N/A	N/A	N/A	Sec.IV Att. C
H3-K1-BS1	Weigh Belt Feeder	10 tph	Pre Oct. 1974	Thayer	N/A	N/A	Sec.IV Att. C
H3-K2-BS1	Weigh Belt Feeder	10 tph	Pre Oct. 1974	Thayer	N/A	N/A	Sec.IV Att. C
H3-K3-BS1	Weigh Belt Feeder	10 tph	Pre Oct. 1974	Thayer	N/A	N/A	Sec.IV Att. C
H3-K4-BS1	Weigh Belt Feeder	25 tph	2008	Merrick	450	450-MC^3-29671	Sec.IV Att. C
Various enclosed screw conveyor devices							
XXII: Twin Peaks Rock and Stone Aggregate Plant							
F-2	Vibrating Grizzly Feeder	800 tph	1985	Diester	5x22	64-177	Sec.III.B Att. B
CR-3	Jaw Crusher	450 tph	1985	Kue Ken	34x42 Jaw	120S12857R	Sec.III.B Att. B

Process Area/ Equipment ID	Type/Description	Nominal Capacity	Year Installed	Manufacturer	Model	Serial Number	Applicable Section
C-4	Belt Conveyor	800 tph	1985	Spaulding	48x28	TR143-85-1338	Sec.III.B Att. B
C-5	Belt Conveyor	800 tph	1985	Spaulding	42x80	80x42T-851339	Sec.III.B Att. B
S-6	Screen	800 tph	1985	Diester	6x20 2 D	398592	Sec.III.B Att. B
C-6	Conveyor	400 tph	1985	Spaulding	36x18	TR144-85-1340	Sec.III.B Att. B
C-7	Conveyor	400 tph	1985	Spaulding	36x60	60x36T-851341	Sec.III.B Att. B
S-11	Screen	400 tph	1985	Diester	6x20 3 D	398593	Sec.III.B Att. B
S-12	Screen	400 tph	1985	Diester	6x20 3 D	398594	Sec.III.B Att. B
C-11	Belt Conveyor	400 tph	1985	Spaulding	36x18	TR145-85-1343	Sec.III.B Att. B
C-12	Belt Conveyor	400 tph	1985	Spaulding	36x18	TR145-85-1350	Sec.III.B Att. B
C-16	Radial Stacker	400 tph	1985	Spaulding	30x100RS	100x30T-851347	Sec.III.B Att. B
C-21	Belt Conveyor	400 tph	1985	Spaulding	24x54	78x24T-851353	Sec.III.B Att. B
C-22	Radial Stacker	800 tph	1985	Spaulding	N/A	100-36T-851359	Sec.III.B Att. B
C-26	Belt Conveyor	300 tph	1985	N/A	30x30	N/A	Sec.III.B Att. B
C-10	Belt Conveyor	400 tph	1985	N/A	30x100	N/A	Sec.III.B Att. B
C-13	Belt Conveyor	300 tph	1985	N/A	30x60	N/A	Sec.III.B Att. B
C-15	Belt Conveyor	300 tph	1985	N/A	30x60	N/A	Sec.III.B Att. B
C-27	Belt Conveyor	300 tph	1985	N/A	30x60	N/A	Sec.III.B Att. B
C-17	Belt Conveyor	400 tph	1985	N/A	30x30	N/A	Sec.III.B Att. B
Hopper 1	Hopper	N/A	1985	N/A	N/A	N/A	Sec.III.B Att. B
Hopper 2	Hopper	N/A	1985	N/A	N/A	N/A	Sec.III.B Att. B
N/A	Belt Conveyor	200 tph	1985	Spaulding	24x37	33x24T-851359	Sec.III.B Att. B
N/A	Stacker	200 tph	1985	Spaulding	24x100 FS	100x24T-851358	Sec.III.B Att. B
N/A	Portable Feeder Conveyor	200 tph	1985	Helmick	30x68	4635-1330-6083B	Sec.III.B Att. B
N/A	Portable Crushers (Maximum Qty: 3)	895 tph (combined)	N/A	N/A	N/A	N/A	Sec.III.B Att. B
N/A	Portable Screens (Maximum Qty: 4)	2,006 tph (combined)	N/A	N/A	N/A	N/A	Sec.III.B Att. B

Process Area/ Equipment ID	Type/Description	Nominal Capacity	Year Installed	Manufacturer	Model	Serial Number	Applicable Section
N/A	Portable Conveyors (Maximum Qty: 15)	4,483 tph (combined)	N/A	N/A	N/A	N/A	Sec.III.B Att. B
XXIII: Portable Grizzly Screen							
R1-SGR	Portable Grizzly	50 tons/hour	Apr-09	Designed and	N/A	N/A	Sec.III.B Att. B
	Screen for Processing Gypsum, Clinker, Iron or Limestone			fabricated on site			
XXIV: Fuel Burning Equipment							
Bunker C boiler	Natural Gas Boiler	6.275 MMBtu/hr	N/A	N/A	N/A	N/A	Sec.IV Att. B
D4-RM1-HTR	Natural Gas Heater	75 MMBtu/hr	2000	N/A	N/A	N/A	Sec.IV Att. B
Separator heaters (4)	Natural Gas	2 MMBtu/hr	N/A	N/A	N/A	N/A	Sec.IV Att. B
H3-K-MG	Natural Gas Motor Generator	100 Kw electric value	2000	Caterpillar	N/A	N/A	Section VIII Att. C
H3-K4-AUX	Natural Gas Auxiliary Engine	70 HP	1971	Caterpillar	N/A	N/A	Section VIII Att. C
Elevator heaters (4)	Natural Gas	0.5 MMBtu/hr	N/A	N/A	N/A	N/A	Sec.IV Att. B
Direct fired heaters (2)	Natural Gas	2 MMBtu/hr	N/A	N/A	N/A	N/A	Sec.IV Att. B
Heating boiler	Natural Gas Boiler	0.825 MMBtu/hr	N/A	N/A	N/A	N/A	Sec.IV Att. B
Radiant heaters (7)	Natural Gas	0.03 MMBtu/hr	N/A	N/A	N/A	N/A	Sec.IV Att. B
Carpenter Shop Unit Heater	Natural Gas	0.1 MMBtu/hr	N/A	N/A	N/A	N/A	Sec.IV Att. B
Office Furnaces (2)	Natural Gas	0.08 MMBtu/hr	N/A	N/A	N/A	N/A	Sec.IV Att. B

Process Area/ Equipment ID	Type/Description	Nominal Capacity	Year Installed	Manufacturer	Model	Serial Number	Applicable Section
Office Furnace	Natural Gas	0.05 MMBtu/hr	N/A	N/A	N/A	N/A	Sec.IV Att. B
Office Furnace	Natural Gas	0.18 MMBtu/hr	N/A	N/A	N/A	N/A	Sec.IV Att. B
Furnaces (3)	Natural Gas	0.04 MMBtu/hr	N/A	N/A	N/A	N/A	Sec.IV Att. B
Furnaces (3)	Natural Gas	0.025 MMBtu/hr	N/A	N/A	N/A	N/A	Sec.IV Att. B
Unit heater (3)	Natural Gas	0.25 MMBtu/hr	N/A	N/A	N/A	N/A	Sec.IV Att. B
Unit heater (2)	Natural Gas	0.075 MMBtu/hr	N/A	N/A	N/A	N/A	Sec.IV Att. B
Unit heater	Natural Gas	0.3 MMBtu/hr	N/A	N/A	N/A	N/A	Sec.IV Att. B
Water heater	Natural Gas Boiler	0.04 MMBtu/hr	N/A	N/A	N/A	N/A	Sec.IV Att. B
Water heater	Natural Gas Boiler	0.075 MMBtu/hr	N/A	N/A	N/A	N/A	Sec.IV Att. B
Water heater	Natural Gas Boiler	0.046 MMBtu/hr	N/A	N/A	N/A	N/A	Sec.IV Att. B
XXV: Petroleum Storage Tanks/Vessels							
Used Oil	Above ground	800 gallons	N/A	N/A	N/A	N/A	Sec.VI Att. B
Diesel	Above ground	50,000 gallons	pre-1980	N/A	N/A	N/A	Sec.VI Att. B
Lube Tank (3)	Above ground	1,000 gallons	N/A	N/A	N/A	N/A	Sec.VI Att. B
Gasoline	Underground	12,000 gallons	1986	N/A	N/A	N/A	Sec.V Att. B
On- specification Used Oil	Above ground	31,000 gallons	N/A	N/A	N/A	N/A	Sec.VI Att. B
On-specification Used Oil (2)	Above ground	28,700 gallons	N/A	N/A	N/A	N/A	Sec.VI Att. B
Bunker C	Aboveground	50,000 bbl	1974	N/A	N/A	N/A	Sec.VI Att. B

ATTACHMENT "F": EQUIPMENT LIST (K6)
AIR QUALITY CONTROL PERMIT NO. 47259
CALPORTLAND COMPANY - RILLITO CEMENT PLANT

EQUIPMENT ID	EQUIPMENT TYPE	MAX. CAPACITY	YEAR INSTALLED	MANUFACTURER	MODEL	SERIAL NUMBER
I. Quarry Crusher System						
B2-OC1	Overhead crane	1200 tph	1971	P&H/Harnishferger	N/A	CH23842
B2-OC2	Overhead crane	1200 tph	1971	P&H/Harnishferger	N/A	CH23843
Truck Dump	Hopper	150 ton	1971	N/A	N/A	N/A
B2-PF1	Pan feeder	1200 tph	1971	Stephens Adamson	N/A	N/A
B2-VG1	Vibrating grizzly	1200 tph	1971	Allis Chalmers	N/A	B40565
B2-IC1	Impact crusher	1200 tph	1971	Hazemag	N1000	N/A
B2-BF1	Belt feeder	1200 tph	1971	Stephens Adamson	N/A	N/A
B2-BC1	Belt Conveyor	1200 tph	1971	Rex Chain Belt	N/A	N/A
B3-BC1	Belt Conveyor	1200 tph	1971	Rex Chain Belt	N/A	N/A
B3-BC2	Belt Conveyor	1200 tph	1971	N/A	N/A	N/A
B3-BC3	Belt Conveyor	1200 tph	N/A	N/A	N/A	N/A
B3-BC4	Shuttle Conveyor	1200 tph	1971	Rex Chain Belt	N/A	N/A
B2-DC1-SC1	Screw Conveyor	1200 tph	1972	N/A	N/A	N/A
B2-DC1-SC2	Screw Conveyor	1200 tph	1972	N/A	N/A	N/A
B3-DC1-SC	Screw Conveyor	1200 tph	1972	N/A	N/A	N/A
B3-VS1	Vibrating screen	1200 tph	1971	Hewitt-Robbins	VS7856	N/A
B2-DC1	Dust Collector	N/A	1972	Mikropul	2G3-96	70-H-1931
B3-DC1	Dust Collector	N/A	1972	Mikropul	1F3-24	70-H-1934
II. Overland Conveyor System						
B5-VF1 through B5-VF12	Vibrating feeders	1200 tph	1971	Eriez Magnetics	95A	RD4-109 through RD4-120
B5-BC1	Belt Conveyor	1200 tph	1971	Rex Chain Belt	N/A	N/A
B5-BC2	Belt Conveyor	1200 tph	1971	Rex Chain Belt	N/A	N/A
B5-BC3	Belt Conveyor	1200 tph	1971	Rex Chain Belt	N/A	N/A

EQUIPMENT ID	EQUIPMENT TYPE	MAX. CAPACITY	YEAR INSTALLED	MANUFACTURER	MODEL	SERIAL NUMBER
B5-BC4	Belt Conveyor	1200 tph	N/A	N/A	N/A	N/A
B5-DC1	Dust Collector	N/A	1972	Mikropul	36S-8-30	70-H-1935
B5-DC2	Dust Collector	N/A	1972	Mikropul	36S-8-30	70-H-1936
B5-DC3	Dust Collector	N/A	1972	Mikropul	36S-8-30	71-H-390
III. Stacker/Reclaimer and Storage Area						
B6-BC1	Belt Conveyor	600 tph	1971	Rex Chain Belt	N/A	N/A
B7-BC1	Belt Conveyor	1200 tph	1971	Rex Chain Belt	N/A	N/A
B7-BC2	Drag Belt Conveyor	1200 tph	N/A	N/A	N/A	N/A
B7-BC3	Stacker Boom Conveyor	1200 tph	N/A	N/A	N/A	N/A
B8-BC1	Belt Conveyor	450 tph	1971	N/A	N/A	N/A
B8-BC1A	Belt Conveyor	500 tph	1971	N/A	N/A	N/A
C2-BC4	Belt Conveyor	500 tph	1971	Rex Chain Belt	N/A	N/A
D4-HOP	Hopper	50 Tons	2000	N/A	N/A	N/A
D4-BF1	Belt Feeder	100 tph	2000	N/A	N/A	N/A
C2-VF2	Vibrating Feeder	N/A	N/A	N/A	N/A	N/A
C2-TR1	Reclaimer	500 tph	1971	MIAG	N/A	N/A
B7-TS	Stacker	1200 tph	1971	MIAG	N/A	N/A
B7-DC1	Dust Collector	N/A	1972	Mikropul	80S-8-20	N/A
B8-DC1	Dust Collector	N/A	1972	Mikropul	80S-8-20	N/A
B8-DC2	Dust Collector	N/A	1972	Mikropul	80S-8-20	N/A
IV. Kiln 6 - Roller Mill Feed Bin Addition						
C2-SB9	Bin	250 tons	K6	N/A	N/A	N/A
C2-SB10	Bin	250 tons	K6	N/A	N/A	N/A
D4-BC2	Belt Conveyor	525 stph	K6	N/A	N/A	N/A
D4-BC3	Belt Conveyor	525 stph	K6	N/A	N/A	N/A
D4-VB9	Bin Vibrator	525 stph	K6	N/A	N/A	N/A
D4-VB10	Bin Vibrator	525 stph	K6	N/A	N/A	N/A
C2-BC12	Belt Conveyor	525 tph	K6	N/A	N/A	N/A

EQUIPMENT ID	EQUIPMENT TYPE	MAX. CAPACITY	YEAR INSTALLED	MANUFACTURER	MODEL	SERIAL NUMBER
C2-BC13	Belt Conveyor	525 tph	K6	N/A	N/A	N/A
D4-BS7	Belt Scale	525 tph	K6	N/A	N/A	N/A
D4-BS8	Belt Scale	525 tph	K6	N/A	N/A	N/A
V. Roller Mill Feed Area						
D4-SB3	Additive Bin	150 tons	2000	N/A	N/A	N/A
D4-SB4	Additive Bin	150 tons	2000	N/A	N/A	N/A
D4-SB5	Additive Bin	150 tons	2000	N/A	N/A	N/A
D4-SB6	Additive Bin	150 tons	2000	N/A	N/A	N/A
Future Additive Bin	Additive Bin	150 tons	N/A	N/A	N/A	N/A
C2-BC1	Belt Conveyor	460/525 tph	2000	N/A	N/A	N/A
C2-BC2	Belt Conveyor	460/525 tph	2000	N/A	N/A	N/A
C2-BC3	Belt Conveyor	460/525 tph	1971	Rex Chain Belt	N/A	N/A
C2-BC7	Belt Conveyor	460/525 tph	2000	N/A	N/A	N/A
D4-BC1	Belt Conveyor	460/525 tph	2000	N/A	N/A	N/A
D4-BC1-ML	Metal Detector	460/525 tph	2000	N/A	N/A	N/A
C2-BC3-BF1	Belt Feeder	460/525 tph	1971	N/A	N/A	N/A
C2-BC3-BS	Belt Scale	460/525 tph	1971	N/A	N/A	N/A
D4-BS1	Belt Scale	460/525 tph	2000	N/A	N/A	N/A
D4-BS2	Belt Scale	460/525 tph	2000	N/A	N/A	N/A
D4-BS3	Belt Scale	460/525 tph	2000	N/A	N/A	N/A
D4-BS4	Belt Scale	460/525 tph	2000	N/A	N/A	N/A
D4-BS5	Belt Scale	460/525 tph	2000	N/A	N/A	N/A
D4-BS6	Belt Scale	460/525 tph	2000	N/A	N/A	N/A
Future Belt scale	Belt Scale	460/525 tph	N/A	N/A	N/A	N/A
D4-BE1	Bucket Elevator	460/525 tph	2000	N/A	N/A	N/A
C2-DR1	Drag Conveyor	460/525 tph	2000	N/A	N/A	N/A
C2-DR1A-D	Drag Conveyor	460/525 tph	2000	N/A	N/A	N/A
C2-DR1B-D	Drag Conveyor	460/525 tph	2000	N/A	N/A	N/A
C2-DR2	Drag Conveyor	460/525 tph	2000	N/A	N/A	N/A

EQUIPMENT ID	EQUIPMENT TYPE	MAX. CAPACITY	YEAR INSTALLED	MANUFACTURER	MODEL	SERIAL NUMBER
C2-DR2A-D	Drag Conveyor	460/525 tph	2000	N/A	N/A	N/A
C2-DR2B-D	Drag Conveyor	460/525 tph	2000	N/A	N/A	N/A
D4-DR1	Drag Conveyor	460/525 tph	2000	N/A	N/A	N/A
C2-BE3	Bucket Elevator	460/525 tph	N/A	N/A	N/A	N/A
C2-BE4	Bucket Elevator	460/525 tph	N/A	N/A	N/A	N/A
C2-SB7	Storage Bin	250 tons	2000	N/A	N/A	N/A
C2-SB8	Storage Bin	250 tons	2000	N/A	N/A	N/A
D4-VB1	Bin Vibrator	460/525 tph	2000	N/A	N/A	N/A
D4-VB2	Bin Vibrator	460/525 tph	2000	N/A	N/A	N/A
D4-VB3	Bin Vibrator	460/525 tph	2000	N/A	N/A	N/A
D4-VB4	Bin Vibrator	460/525 tph	2000	N/A	N/A	N/A
D4-VB5	Bin Vibrator	460/525 tph	2000	N/A	N/A	N/A
D4-VB6	Bin Vibrator	460/525 tph	2000	N/A	N/A	N/A
C2-DC1	Dust Collector	N/A	1972	Mikropul	36S-8-30	71-H-1631
C2-DC3	Dust Collector	N/A	2000	N/A	N/A	N/A
D4-DC1	Dust Collector	N/A	2000	N/A	N/A	N/A
D4-DC2	Dust Collector	N/A	2000	N/A	N/A	N/A
VI. Roller Mill						
D4-RM1	Roller Mill	460/525 tph	2000/K6	Polysius Quadropol	RMR 45/23	N/A
D4-SS1	Separator	460/525 tph	2000/K6	N/A	N/A	N/A
D4-SB1	Storage Bin	460/525 tph	2000	N/A	N/A	N/A
D4-VF1	Vibrating Feeder	460/525 tph	2000	N/A	N/A	N/A
D4-RM1-OC1	Overhead Crane	460/525 tph	2000	N/A	N/A	N/A
D4-RM1-OC2	Overhead Crane	460/525 tph	2000	N/A	N/A	N/A
D4-RM1-OC3	Overhead Crane	460/525 tph	2000	N/A	N/A	N/A
D4-BE2	Bucket Elevator	460/525 tph	2000/K6	N/A	N/A	N/A
D4-CC1	Cyclone	460/525 tph	2000	N/A	N/A	N/A
D4-CC2	Cyclone	460/525 tph	2000	N/A	N/A	N/A
D4-CC3	Cyclone	460/525 tph	2000	N/A	N/A	N/A

EQUIPMENT ID	EQUIPMENT TYPE	MAX. CAPACITY	YEAR INSTALLED	MANUFACTURER	MODEL	SERIAL NUMBER
D4-CC4	Cyclone	460/525 tph	2000	N/A	N/A	N/A
D4-CC-BL1	Fan	460/525 tph	2000/K6	N/A	N/A	N/A
D4-AS1	Air Slide	460/525 tph	2000	N/A	N/A	N/A
D4-AS2	Air Slide	460/525 tph	2000	N/A	N/A	N/A
D4-AS3	Air Slide	460/525 tph	2000	N/A	N/A	N/A
D4-RM1-HTR	Air Heater	N/A	2000	N/A	N/A	N/A
VII. Homogenizing and Kiln Feed Silos						
F2-AS1	Air Slide	460 TPH	N/A	N/A	N/A	N/A
F2-AS2	Air Slide	460 TPH	N/A	N/A	N/A	N/A
F2-AS3	Air Slide	460 TPH	N/A	N/A	N/A	N/A
F2-AS5	Air Slide	460 TPH	2000	N/A	N/A	N/A
F2-OT-AS	Air Slide	460 TPH	N/A	N/A	N/A	N/A
F3-AS1	Air Slide	460 TPH	N/A	N/A	N/A	N/A
F3-AS2	Air Slide	460 TPH	N/A	N/A	N/A	N/A
F3-AS3	Air Slide	461 TPH	N/A	N/A	N/A	N/A
F3-AS4	Air Slide	460 TPH	N/A	N/A	N/A	N/A
F3-AS6	Air Slide	460 TPH	N/A	N/A	N/A	N/A
F2-BE1	Bucket Elevator	460 TPH	N/A	N/A	N/A	N/A
F3-BE1	Bucket Elevator	460 TPH	1971	N/A	N/A	N/A
HS-1	Homogenizing Silo	3300 tons	1971	N/A	N/A	N/A
F3-SB1	Kiln Feed Storage Silo	3000 Tons	1971	N/A	N/A	N/A
F3-SB2	Kiln Feed Storage Silo	3000 Tons	1971	N/A	N/A	N/A
H4-SB-KS	Raw Mix Bin	25 tons	1971	N/A	N/A	N/A
H4-SC2	Screw Conveyor	460 TPH	N/A	N/A	N/A	N/A
H4-BS	Weighbelt Feeder	460 TPH	N/A	N/A	N/A	N/A
H4-FP1	Pneumatic Conveyance System	460 TPH	K6	N/A	N/A	N/A

EQUIPMENT ID	EQUIPMENT TYPE	MAX. CAPACITY	YEAR INSTALLED	MANUFACTURER	MODEL	SERIAL NUMBER
H4-FC1	Compressor	460 TPH	K6	N/A	N/A	N/A
H4-DC1	Dust Collector	N/A	1972	Mikropul	25S-8-30B	79318
F2-DC1	Dust Collector	N/A	2000	N/A	N/A	N/A
F3-DC1	Dust Collector	N/A	1972	Mikropul	36S-8-30	71-H-392
F3-DC2	Dust Collector	N/A	1972	Mikropul	36S-8-30	71-H-393
VIII. Kiln 6 - Homogenizing Silo						
D4-AS3-DG1	Gate	525 stph	K6	N/A	N/A	N/A
D4-AS4	Air Slide	525 stph	K6	N/A	N/A	N/A
D4-BE3	Bucket Elevator	525 stph	K6	N/A	N/A	N/A
D4-AS5	Airslide	525 stph	K6	N/A	N/A	N/A
F4-HS	Homogenizing Silo	12,500 tons	K6	N/A	N/A	N/A
F4-AS1	Airslide	464 TPH	K6	N/A	N/A	N/A
F4-AS2	Airslide	464 TPH	K6	N/A	N/A	N/A
F4-AS3	Airslide	464 TPH	K6	N/A	N/A	N/A
F4-AS4	Airslide	464 TPH	K6	N/A	N/A	N/A
F4-AS5	Airslide	464 TPH	K6	N/A	N/A	N/A
F4-AS6	Airslide	464 TPH	K6	N/A	N/A	N/A
F4-BL1	Blower	464 TPH	K6	N/A	N/A	N/A
F4-BL2	Blower	464 TPH	K6	N/A	N/A	N/A
F4-BL3	Blower	464 TPH	K6	N/A	N/A	N/A
F4-BL4	Blower	464 TPH	K6	N/A	N/A	N/A
F4-DC1	Dust Collector	N/A	K6	N/A	N/A	N/A
F5-SB1	Calibration Bin	464 TPH	K6	N/A	N/A	N/A
F5-AS1	Airslide	464 TPH	K6	N/A	N/A	N/A
F5-AS2	Airslide	464 TPH	K6	N/A	N/A	N/A
F5-AS3	Airslide	464 TPH	K6	N/A	N/A	N/A
F5-DC1	Dust Collector	N/A	K6	N/A	N/A	N/A
IX. Raw Feed Materials to Rock Storage						
Crusher Hopper	Hopper	500 tph	N/A	N/A	N/A	N/A

EQUIPMENT ID	EQUIPMENT TYPE	MAX. CAPACITY	YEAR INSTALLED	MANUFACTURER	MODEL	SERIAL NUMBER
B9-PF1	Pan Conveyor	500 tph	N/A	N/A	N/A	N/A
B9-OC1	Overhead Crane	N/A	N/A	N/A	N/A	N/A
RS-OC1	Overhead Crane	N/A	N/A	N/A	N/A	N/A
RS-OC2	Overhead Crane	N/A	N/A	N/A	N/A	N/A
B9-IC	Impact Crusher	500 tph	1952	Hewitt Robbins	N/A	N/A
B9-VS1	Vibrating Screen	500 tph	1952	Hewitt Robbins	N/A	N/A
B9-VS2	Vibrating Screen	500 tph	1952	Hewitt Robbins	N/A	N/A
B9-BC1	Belt Conveyor	500 tph	N/A	N/A	N/A	N/A
B9-BC2	Belt Conveyor	500 tph	N/A	N/A	N/A	N/A
B9-BC3	Belt Conveyor	500 tph	1949	Stephens Adamson	5-S4	N/A
B9-BC4	Belt Conveyor	500 tph	N/A	N/A	N/A	N/A
B9-BC4-BF	Belt feeder	500 tph	N/A	N/A	N/A	N/A
B9-BC4-BF-Hopper	Hopper	500 tph	N/A	N/A	N/A	N/A
B9-BC5	Belt Conveyor	500 tph	1951	N/A	N/A	N/A
B9-BC6	Belt Conveyor	500 tph	N/A	N/A	N/A	N/A
B9-DC1	Dust Collector	N/A	1985	Nordblow	BA-12	949-106
B9-DC2	Dust Collector	N/A	1985	Mikropul	80F3-10	855192H1
B9-DC3	Dust Collector	N/A	1985	Mikropul	80F2-10	855193H1
B9-DC5	Dust Collector	N/A	1985	Mikropul	36S-8-30	71-H-1622
X. Kiln 6 - Preheater and Kiln						
H4-KF	Fan	300 tph	K6	N/A	N/A	N/A
H4-WST	Gas Conditioning Tower	300 tph	K6	N/A	N/A	N/A
H4-HC1	Air compressor	N/A	K6	N/A	N/A	N/A
H4-HC2	Air compressor	N/A	K6	N/A	N/A	N/A
H4-DRC1	Drag Chain Conveyor	300 tph	K6	N/A	N/A	N/A
H4-DRC2	Drag Chain Conveyor	300 tph	K6	N/A	N/A	N/A

EQUIPMENT ID	EQUIPMENT TYPE	MAX. CAPACITY	YEAR INSTALLED	MANUFACTURER	MODEL	SERIAL NUMBER
H5-BE1	Bucket Elevator	300 tph	K6	N/A	N/A	N/A
H5-SB1	Bin	365 tons	K6	N/A	N/A	N/A
H5-AS	Airslide	300 tph	K6	N/A	N/A	N/A
H5-FP1	Pneumatic Conveyor	300 tph	K6	N/A	N/A	N/A
H5-FC1	Blower	300 tph	K6	N/A	N/A	N/A
H5-FP2	Pneumatic Conveyor	300 tph	K6	N/A	N/A	N/A
H5-FC2	Blower	300 tph	K6	N/A	N/A	N/A
F5-SB1	Bin	300 tph	K6	N/A	N/A	N/A
F5-AS1	Kiln Feed System	300 tph	K6	N/A	N/A	N/A
F5-AS2	Kiln Feed System	300 tph	K6	N/A	N/A	N/A
F5-AS3	Airslide	300 tph	K6	N/A	N/A	N/A
F5-A	Alleviator	300 tph	K6	N/A	N/A	N/A
F5-AL	Airlift Conveyor	300 tph	K6	N/A	N/A	N/A
F5-AL-BL3	Blower	300 tph	K6	N/A	N/A	N/A
F5-AL-BL2	Blower	300 tph	K6	N/A	N/A	N/A
F5-AL-BL1	Blower	300 tph	K6	N/A	N/A	N/A
H4-A	Alleviator	300 tph	K6	N/A	N/A	N/A
H4-AS1	Airslide	300 tph	K6	N/A	N/A	N/A
H4-AS4	Airslide	300 tph	K6	N/A	N/A	N/A
H4-AS2	Airslide	300 tph	K6	N/A	N/A	N/A
H4-AS3	Airslide	300 tph	K6	N/A	N/A	N/A
H4-AS5	Airslide	300 tph	K6	N/A	N/A	N/A
H4-CC1A	Preheater Stage 1	300 tph	K6	N/A	N/A	N/A
H4-CC2A	Preheater Stage 2	300 tph	K6	N/A	N/A	N/A
H4-CC3A	Preheater Stage 3	300 tph	K6	N/A	N/A	N/A
H4-CC4A	Preheater Stage 4	300 tph	K6	N/A	N/A	N/A
H4-CC5A	Preheater Stage 5	300 tph	K6	N/A	N/A	N/A
H4-CC1B	Preheater Stage 1	300 tph	K6	N/A	N/A	N/A
H4-CC2B	Preheater Stage 2	300 tph	K6	N/A	N/A	N/A

EQUIPMENT ID	EQUIPMENT TYPE	MAX. CAPACITY	YEAR INSTALLED	MANUFACTURER	MODEL	SERIAL NUMBER
H4-CC3B	Preheater Stage 3	300 tph	K6	N/A	N/A	N/A
H4-CC4B	Preheater Stage 4	300 tph	K6	N/A	N/A	N/A
H4-CC5B	Preheater Stage 5	300 tph	K6	N/A	N/A	N/A
H4-CI	Calciner	300 tph	K6	N/A	N/A	N/A
H3-K6	Kiln	300 tph	K6	N/A	N/A	N/A
H3-CB	Kiln Burner	300 tph	K6	N/A	N/A	N/A
H4-TDF	Tire Handling System	300 tph	K6	N/A	N/A	N/A
H4-SNCR	SNCR system	300 tph	K6	N/A	N/A	N/A
H4-DC2	Dust Collector	N/A	K6	N/A	N/A	N/A
H5-DC1	Dust Collector	N/A	K6	N/A	N/A	N/A
H5-GB	Dust Collector	N/A	K6	N/A	N/A	N/A
XI. Kiln 6 - Clinker Cooler						
H2-QC	Clinker Cooler	300 tph	K6	N/A	N/A	N/A
H2-QC-BL1	Fan	300 tph	K6	N/A	N/A	N/A
H2-QC-BL2	Fan	300 tph	K6	N/A	N/A	N/A
H2-QC-BL3	Fan	300 tph	K6	N/A	N/A	N/A
H2-QC-BL4	Fan	300 tph	K6	N/A	N/A	N/A
H2-QC-BL5	Fan	300 tph	K6	N/A	N/A	N/A
H2-QC-BL6	Fan	300 tph	K6	N/A	N/A	N/A
H2-QC-BL7	Fan	300 tph	K6	N/A	N/A	N/A
H2-QC-BL8	Fan	300 tph	K6	N/A	N/A	N/A
H2-QC-RB	Clinker Roll Crusher	300 tph	K6	N/A	N/A	N/A
H2-HXC	Heat Exchanger	300 tph	K6	N/A	N/A	N/A
H2-HXC-CF1	Cooling Air Fans	300 tph	K6	N/A	N/A	N/A
H2-HXC-CF2	Cooling Air Fans	300 tph	K6	N/A	N/A	N/A
H2-HXC-CF3	Cooling Air Fans	300 tph	K6	N/A	N/A	N/A
H2-HXC-CF4	Cooling Air Fans	300 tph	K6	N/A	N/A	N/A
H2-HXC-CF5	Cooling Air Fans	300 tph	K6	N/A	N/A	N/A

EQUIPMENT ID	EQUIPMENT TYPE	MAX. CAPACITY	YEAR INSTALLED	MANUFACTURER	MODEL	SERIAL NUMBER
H2-HXC-CF6	Cooling Air Fans	300 tph	K6	N/A	N/A	N/A
H2-HXC-CF7	Cooling Air Fans	300 tph	K6	N/A	N/A	N/A
H2-HXC-CF8	Cooling Air Fans	300 tph	K6	N/A	N/A	N/A
H2-HXC-CF9	Cooling Air Fans	300 tph	K6	N/A	N/A	N/A
H2-HXC-CF10	Cooling Air Fans	300 tph	K6	N/A	N/A	N/A
H2-HXC-CF11	Cooling Air Fans	300 tph	K6	N/A	N/A	N/A
H2-HXC-CF12	Cooling Air Fans	300 tph	K6	N/A	N/A	N/A
H2-HXC-SC1	Screw Conveyor	300 tph	K6	N/A	N/A	N/A
H2-HXC-SC2	Screw Conveyor	300 tph	K6	N/A	N/A	N/A
H2-HXC-SC3	Screw Conveyor	300 tph	K6	N/A	N/A	N/A
H2-HXC-SC4	Screw Conveyor	300 tph	K6	N/A	N/A	N/A
H2-GB	Dust Collector	N/A	K6	N/A	N/A	N/A
XII. Clinker/Gypsum Transport and Finish Mill Feed Bins						
C2-BC5	Belt Conveyor	155 tph	1971	Rex Chain Belt	N/A	N/A
C2-BC6	Belt Conveyor	155 tph	1977	N/A	N/A	N/A
C2-BC6A	Belt Conveyor	155 tph	1977	N/A	N/A	N/A
C2-BC8	Belt Conveyor	155 tph	1971	Rex Chain Belt	N/A	N/A
C2-BC9	Belt Conveyor	155 tph	1971	Rex Chain Belt	N/A	N/A
C2-BC10	Belt Conveyor	155 tph	1971	Rex Chain Belt	N/A	N/A
C2-BC11	Belt Conveyor	155 tph	1977	N/A	N/A	N/A
C2-BC11A	Belt Conveyor	155 tph	1977	N/A	N/A	N/A
D2-BC1	Belt Conveyor	155 tph	1971	Rex Chain Belt	N/A	N/A
D2-BC2	Belt Conveyor	155 tph	2001	Rex Chain Belt	N/A	N/A
D2-BC6	Belt Conveyor	155 tph	2001	Rex Chain Belt	N/A	N/A
C2-BC5-BS	Belt Scale	155 tph	1971	Rex Chain Belt	N/A	N/A
D2-BS1	Belt Scale	155 tph	1971	Merrick	430	WLL9699
D2-BS2	Belt Scale	155 tph	1972	Merrick	430	WLL9696
D2-BS3	Belt Scale	155 tph	1973	Merrick	430	WLL9701
D2-BS4	Belt Scale	155 tph	1974	Merrick	430	WLL9698

EQUIPMENT ID	EQUIPMENT TYPE	MAX. CAPACITY	YEAR INSTALLED	MANUFACTURER	MODEL	SERIAL NUMBER
D2-BS5	Belt Scale	155 tph	1975	Merrick	430	WLL9700
D2-BS6	Belt Scale	155 tph	1976	Merrick	430	WLL9697
C2-SC1	Screw Conveyor	155 tph	1972	N/A	N/A	N/A
C2-SB1	Storage Bin	360 tons	1971	N/A	N/A	N/A
C2-SB2	Storage Bin	360 tons	1971	N/A	N/A	N/A
C2-SB3	Storage Bin	360 tons	1971	N/A	N/A	N/A
C2-SB4	Storage Bin	360 tons	1971	N/A	N/A	N/A
C2-SB5	Storage Bin	360 tons	1971	N/A	N/A	N/A
C2-SB6	Storage Bin	360 tons	1971	N/A	N/A	N/A
C2-VF1	Vibrating Feeder	155 tph	N/A	N/A	N/A	N/A
C2-DC2	Dust Collector	N/A	1972	Mikropul	36S-8-30	71-H-632
C2-DC4	Dust Collector	N/A	1972	Mikropul	36S-8-30	71-H-1622
C2-DC5	Dust Collector	N/A	1972	Mikropul	25S-8-30	71-H-394
C2-DC6	Dust Collector	N/A	1972	Mikropul	25S-8-30	71-H-395
C2-DC7	Dust Collector	N/A	1972	Mikropul	25S-8-30	71-H-396
C2-DC8	Dust Collector	N/A	1972	Mikropul	25S-8-30	71-H-397
C2-DC9	Dust Collector	N/A	1972	Mikropul	25S-8-30	71-H-398
C2-DC10	Dust Collector	N/A	1972	Mikropul	25S-8-30	71-H-399
C2-DC11	Dust Collector	N/A	1972	Mikropul	36S-8-30	71-H-633
C2-DC12	Dust Collector	N/A	1986	Mikropul	25S-10-30	870085H1
C2-DC13	Dust Collector	N/A	1986	Mikropul	25S-10-30	870085H2
C2-DC14	Dust Collector	N/A	K6	N/A	N/A	N/A
D2-DC1	Dust Collector	N/A	1972	Mikropul	1F2	71-H-816
D2-DC3	Dust Collector	N/A	1972	Mikropul	36S-8-30	71-H-822
XIII. Kiln 6 - Clinker Storage						
H2-PF1	Metallic conveyor	N/A	K6	N/A	N/A	N/A
H2-PF2	Pan Conveyor	N/A	K6	N/A	N/A	N/A
H2-PF3	Pan Conveyor	N/A	K6	N/A	N/A	N/A
J2-SD1	Clinker Dome	N/A	K6	N/A	N/A	N/A

EQUIPMENT ID	EQUIPMENT TYPE	MAX. CAPACITY	YEAR INSTALLED	MANUFACTURER	MODEL	SERIAL NUMBER
J3-SD1-VF1	Vibrating Feeder	N/A	K6	N/A	N/A	N/A
J3-SD1-VF2	Vibrating Feeder	N/A	K6	N/A	N/A	N/A
J3-SD1-VF3	Vibrating Feeder	N/A	K6	N/A	N/A	N/A
J3-SD1-VF4	Vibrating Feeder	N/A	K6	N/A	N/A	N/A
J3-SD1-VF5	Vibrating Feeder	N/A	K6	N/A	N/A	N/A
J2-SD2	Clinker Dome	N/A	K6	N/A	N/A	N/A
J3-SD2-VF1	Vibrating Feeder	N/A	K6	N/A	N/A	N/A
J3-SD2-VF2	Vibrating Feeder	N/A	K6	N/A	N/A	N/A
J3-SD2-VF3	Vibrating Feeder	N/A	K6	N/A	N/A	N/A
J3-SD2-VF4	Vibrating Feeder	N/A	K6	N/A	N/A	N/A
J3-SD2-VF5	Vibrating Feeder	N/A	K6	N/A	N/A	N/A
H2-SB1	Clinker Bin	N/A	K6	N/A	N/A	N/A
H2-SB1-SPT	Loading Spout	N/A	K6	N/A	N/A	N/A
J3-BC1	Belt Conveyor	N/A	K6	N/A	N/A	N/A
J3-BC2	Belt Conveyor	N/A	K6	N/A	N/A	N/A
J3-BC3	Belt conveyor	N/A	K6	N/A	N/A	N/A
J3-BC4	Belt conveyor	N/A	K6	N/A	N/A	N/A
H2-DC1	Dust Collector	N/A	K6	N/A	N/A	N/A
H2-DC3	Dust Collector	N/A	K6	N/A	N/A	N/A
J2-SD1-DC1	Dust Collector	N/A	K6	N/A	N/A	N/A
J2-SD2-DC1	Dust Collector	N/A	K6	N/A	N/A	N/A
J3-DC1	Dust Collector	N/A	K6	N/A	N/A	N/A
J3-DC2	Dust Collector	N/A	K6	N/A	N/A	N/A
J3-DC3	Dust Collector	N/A	K6	N/A	N/A	N/A
J3-DC4	Dust Collector	N/A	K6	N/A	N/A	N/A
J3-DC5	Dust Collector	N/A	K6	N/A	N/A	N/A
J3-DC6	Dust Collector	N/A	K6	N/A	N/A	N/A
H2-DC2-SC1	Screw Conveyor	207 tph	2000	N/A	N/A	N/A
H2-DC2-SC2	Screw Conveyor	207 tph	2000	N/A	N/A	N/A

EQUIPMENT ID	EQUIPMENT TYPE	MAX. CAPACITY	YEAR INSTALLED	MANUFACTURER	MODEL	SERIAL NUMBER
H2-DC2	Dust Collector	N/A	2000	N/A	N/A	N/A
RS-DC1	Dust Collector	N/A	K6	N/A	N/A	N/A
XIV. Finish Milling - CM Area						
CM7-AS1A	Air Slide	69 tph	1997	Bayshore	N/A	N/A
CM7-AS1B	Air Slide	69 tph	1997	Bayshore	N/A	N/A
CM7-AS1-MT	Metal Trap	69 tph	1997	Bayshore	N/A	N/A
CM7-AS2	Air Slide	69 tph	1997	Bayshore	N/A	N/A
CM7-AS3	Air Slide	69 tph	N/A	N/A	N/A	N/A
CM7-AS4	Air Slide	69 tph	N/A	N/A	N/A	N/A
CM7-AS5	Air Slide	69 tph	N/A	N/A	N/A	N/A
CM7-AS6	Air Slide	69 tph	N/A	N/A	N/A	N/A
CM7-AS7	Air Slide	69 tph	N/A	N/A	N/A	N/A
CM7-DC1-AS	Air Slide	69 tph	N/A	N/A	N/A	N/A
CM7-DC3-AS	Air Slide	69 tph	N/A	N/A	N/A	N/A
CM7-CX-AS	Air Slide	69 tph	N/A	N/A	N/A	N/A
CM7-BC1	Belt Conveyor	69 tph	N/A	N/A	N/A	N/A
CM7-BS1	Belt Scale	69 tph	1982	N/A	N/A	N/A
CM7-BS2	Belt Scale	69 tph	1982	N/A	N/A	N/A
CM7-BS3	Belt Scale	69 tph	N/A	N/A	N/A	N/A
CM7-BE1	Bucket Elevator	69 tph	1998	Rexnord	N/A	N/A
CM7-BE2	Bucket Elevator	69 tph	1998	Rexnord	N/A	N/A
CM-FP3	Pneumatic Conveyor	69 tph	N/A	N/A	N/A	N/A
CM-FP3-AS	Air Slide	69 tph	N/A	N/A	N/A	N/A
CM7-MT1	Material Trap	69 tph	N/A	N/A	N/A	N/A
CM7-MT1-BL1	Material Trap	69 tph	N/A	N/A	N/A	N/A
CM7-M	Mill	69 tph	1970	Allis Chalmers	N/A	B11915
CM7-CX	Mill Cooler	69 tph	1970	N/A	N/A	N/A
CM7-SC1	Screw Conveyor	69 tph	N/A	N/A	N/A	N/A
CM-OC1	Overhead Crane	N/A	N/A	N/A	N/A	N/A

EQUIPMENT ID	EQUIPMENT TYPE	MAX. CAPACITY	YEAR INSTALLED	MANUFACTURER	MODEL	SERIAL NUMBER
CM7-RP1	Roll Crusher	69 tph	N/A	N/A	N/A	N/A
CM7-RP2	Roll Crusher	69 tph	N/A	N/A	N/A	N/A
CM-MA-SC1	Screw Conveyor	69 tph	N/A	N/A	N/A	N/A
CM-MA-SC2	Screw Conveyor	69 tph	N/A	N/A	N/A	N/A
CM-MA-SCF1	Scew Feeder	69 tph	N/A	N/A	N/A	N/A
CM-MA-SCF2	Screw Feeder	69 tph	N/A	N/A	N/A	N/A
CM-MA-SCF3	Screw Feeder	69 tph	N/A	N/A	N/A	N/A
CM7-SS	Separator	69 tph	1997	N/A	N/A	N/A
CM7 Clinker Bin	Storage Bin	N/A	1970	N/A	N/A	N/A
CM7 Gypsum Bin	Storage Bin	N/A	1970	N/A	N/A	N/A
CM7 Limestone Bin	Storage Bin	N/A	1982	N/A	N/A	N/A
CM-MA-BIN1	Storage Silo	150 tons	1970	N/A	N/A	N/A
CM-MA-BIN2	Storage Silo	150 tons	1970	N/A	N/A	N/A
CM-MA-BIN3	Storage Silo	150 tons	1970	N/A	N/A	N/A
CM7-BS1-VF1	Vibrating Feeder	69 tph	N/A	N/A	N/A	N/A
CM7-DC1	Dust Collector	N/A	1997	Amerex	N/A	N/A
CM7-DC2	Dust Collector	N/A	1998	Amerex	N/A	N/A
CM7-DC3	Dust Collector	N/A	1997	Amerex	N/A	N/A
CM-MA-DC1	Dust Collector	N/A	1970	Mikropul	16S-8-30	270-H-250
XV. Finish Milling - D2 Area						
D2-AS1	Air Slide	155 tph	N/A	N/A	N/A	N/A
D2-AS2	Air Slide	155 tph	2001	N/A	N/A	N/A
D2-AS3	Air Slide	155 tph	2001	N/A	N/A	N/A
D2-1-AS1	Air Slide	155 tph	2001	N/A	N/A	N/A
D2-1-AS1A	Air Slide	155 tph	N/A	N/A	N/A	N/A
D2-1-AS1B	Air Slide	155 tph	N/A	N/A	N/A	N/A
D2-1-AS1C	Air Slide	155 tph	N/A	N/A	N/A	N/A
D2-1-AS2	Air Slide	155 tph	N/A	N/A	N/A	N/A
D2-1-AS3A	Air Slide	155 tph	N/A	N/A	N/A	N/A

EQUIPMENT ID	EQUIPMENT TYPE	MAX. CAPACITY	YEAR INSTALLED	MANUFACTURER	MODEL	SERIAL NUMBER
D2-1-AS3B	Air Slide	155 tph	N/A	N/A	N/A	N/A
D2-1-AS4A	Air Slide	155 tph	N/A	N/A	N/A	N/A
D2-1-AS4B	Air Slide	155 tph	N/A	N/A	N/A	N/A
D2-1-AS4C	Air Slide	155 tph	N/A	N/A	N/A	N/A
D2-1-AS5A	Air Slide	155 tph	N/A	N/A	N/A	N/A
D2-1-AS5B	Air Slide	155 tph	N/A	N/A	N/A	N/A
D2-1-AS8A	Air Slide	155 thp	N/A	N/A	N/A	N/A
D2-1-DC1-AS	Air Slide	155 tph	N/A	N/A	N/A	N/A
D2-PC-AS1A	Air Slide	155 tph	N/A	N/A	N/A	N/A
D2-PC-AS1B	Air Slide	155 tph	N/A	N/A	N/A	N/A
D2-PC-AS2A	Air Slide	155 tph	N/A	N/A	N/A	N/A
D2-PC-AS2B	Air Slide	155 tph	N/A	N/A	N/A	N/A
D2-1-BE3	Bucket Elevator	155 tph	1971	Rex Chain Belt	N/A	N/A
D2-1-BE4	Bucket Elevator	155 tph	1971	Rex Chain Belt	N/A	N/A
D2-1-BC1	Belt Conveyor	155 tph	1971	Rex Chain Belt	N/A	N/A
D2-CX	Cement Cooler	155 tph	Future	N/A	N/A	N/A
D2-FP1	Pnuematic Pump	155 tph	N/A	N/A	N/A	N/A
D2-FC1	Compressor	155 tph	N/A	N/A	N/A	N/A
D2-FC2	Compressor	155 tph	N/A	N/A	N/A	N/A
D2-OC1	Overhead Crane	N/A	N/A	N/A	N/A	N/A
D2-1-M	Raw Mill	155 tph	1971	Allis Chalmers	N/A	B-16786
D2-1-SS	Separator	155 tph	PI	N/A	N/A	N/A
D2-PC	Product Collector	N/A	N/A	N/A	N/A	N/A
D2-DC4	Dust Collector	N/A	N/A	N/A	N/A	N/A
D2-1-DC1	Dust Collector	N/A	1975	Mikropul	283-96	71-H-612
XVI. Finish Milling - D3 Area						
D3-1-AS1	Air Slide	150 tph	N/A	N/A	N/A	N/A
D3-1-AS2A	Air Slide	150 tph	N/A	N/A	N/A	N/A
D3-1-AS2B	Air Slide	150 tph	N/A	N/A	N/A	N/A

EQUIPMENT ID	EQUIPMENT TYPE	MAX. CAPACITY	YEAR INSTALLED	MANUFACTURER	MODEL	SERIAL NUMBER
D3-1-AS3	Air Slide	150 tph	N/A	N/A	N/A	N/A
D3-1-AS4A	Air Slide	150 tph	1973	Fuller	N/A	N/A
D3-1AS4B	Air Slide	150 tph	1987	Fluidor	N/A	N/A
D3-1-AS5A	Air Slide	150 tph	N/A	N/A	N/A	N/A
D3-1-AS5B	Air Slide	150 tph	1987	Fluidor	N/A	N/A
D3-1-AS5B-MT	Material Trap	150 tph	N/A	N/A	N/A	N/A
D3-1-AS5B-MT-BL	Material Trap Blower	150 tph	N/A	N/A	N/A	N/A
D3-1-AS6	Air Slide	150 tph	N/A	N/A	N/A	N/A
D3-1-AS7	Air Slide	150 tph	1987	Fluidor	N/A	N/A
D3-1-AS8	Air Slide	150 tph	1987	Fluidor	N/A	N/A
D3-1-AS9	Air Slide	150 tph	N/A	N/A	N/A	N/A
D3-1-AS10	Air Slide	150 tph	N/A	N/A	N/A	N/A
D3-1-AS11	Air Slide	150 tph	1987	Fluidor	N/A	N/A
D3-1-AS12	Air Slide	150 tph	1973	Fuller	N/A	N/A
D3-1-AS13	Air Slide	150 tph	N/A	N/A	N/A	N/A
D3-1-DC2-AS1A	Air Slide	150 tph	N/A	N/A	N/A	N/A
D3-1-DC2-AS2A	Air Slide	150 tph	N/A	N/A	N/A	N/A
D3-1-DC2-AS1B	Air Slide	150 tph	N/A	N/A	N/A	N/A
D3-1-DC2-AS2B	Air Slide	150 tph	N/A	N/A	N/A	N/A
D3-1-BC1	Belt Conveyor	150 tph	1987	Rex Chain Belt	N/A	N/A
D3-1-BC2	Belt Conveyor	150 tph	1973	Rexnord	N/A	N/A
D3-1-BC3	Belt Conveyor	150 tph	1987	Polysius	N/A	N/A
D3-1-BC4	Belt Conveyor	150 tph	N/A	N/A	N/A	N/A
D3-1-BS1	Belt Scale	150 tph	1988	Thayer	N/A	N/A
D3-1-BS2	Belt Scale	150 tph	1973	Merrick	N/A	N/A
D3-1-BC2-BS	Belt Scale	150 tph	1973	Merrick	N/A	N/A
D3-1-BE1	Bucket Elevator	150 tph	1987	Rexnord	N/A	N/A
D3-1-BE2	Bucket Elevator	150 tph	1987	N/A	N/A	N/A

EQUIPMENT ID	EQUIPMENT TYPE	MAX. CAPACITY	YEAR INSTALLED	MANUFACTURER	MODEL	SERIAL NUMBER
D3-1-BE3	Bucket Elevator	150 tph	1987	N/A	N/A	N/A
D3-1-BE4	Bucket Elevator	150 tph	1973	Rex Chain Belt	N/A	N/A
D3-1-BE5	Bucket Elevator	150 tph	1987	Rexnord	N/A	N/A
D3-1-CX	Cement Cooler	150 tph	N/A	N/A	N/A	N/A
D3-1-FP1	Pnuematic Pump	150 tph	N/A	N/A	N/A	N/A
D3-1-FC1	Compressor	150 tph	N/A	N/A	N/A	N/A
D3-1-FC2	Compressor	150 tph	N/A	N/A	N/A	N/A
D3-1-WC1	Cooling Tower	150 tph	N/A	N/A	N/A	N/A
D3-1-SS-CC	Cyclone	150 tph	N/A	N/A	N/A	N/A
D3-1-M	Finish Mill	150 tph	1973	Allis Chalmers	N/A	B40131
D3-1-OC	Overhead Crane	150 tph	N/A	N/A	N/A	N/A
D3-1-HRP1	Roll Press	150 tph	1987	Polysius	N/A	450-4
D3-1-HRP2	Roll Press	150 tph	N/A	N/A	N/A	N/A
D3-1-BC3-SC	Screw Conveyor	150 tph	N/A	N/A	N/A	N/A
D3-1-BC4-SC	Screw Conveyor	150 tph	N/A	N/A	N/A	N/A
D3-1-DC1-SC1	Screw Conveyor	150 tph	1974	N/A	N/A	N/A
D3-1-DC1-SC2	Screw Conveyor	150 tph	1974	N/A	N/A	N/A
D3-1-DC3-SC	Screw Conveyor	150 tph	1987	N/A	N/A	N/A
D3-1-SC1	Screw Conveyor	150 tph	N/A	N/A	N/A	N/A
D3-1-SS	Separator	150 tph	N/A	Polysius	Sepol 290	N/A
D3-1-SB1	Storage Bin	150 tph	N/A	N/A	N/A	N/A
D3-1-SB2	Storage Bin	150 tph	N/A	N/A	N/A	N/A
D3-1-SB3	Storage Bin	150 tph	K6	N/A	N/A	N/A
D3-1-VB	Variable Feeder	150 tph	N/A	N/A	N/A	N/A
D3-1-VB1	Variable Feeder	150 tph	N/A	N/A	N/A	N/A
D3-1-BC5-HOP	Hopper	150 tph	N/A	N/A	N/A	N/A
D3-1-BC5	Belt Feeder	150 tph	N/A	N/A	N/A	N/A
D3-1-DC1	Dust Collector	N/A	1974	Mikropul	289S-10-20-T	72-H-2337
D3-1-DC2	Dust Collector	N/A	1987	Mikropul	289S-10-20-T	N/A

EQUIPMENT ID	EQUIPMENT TYPE	MAX. CAPACITY	YEAR INSTALLED	MANUFACTURER	MODEL	SERIAL NUMBER
D3-1-DC3	Dust Collector	N/A	1987	Mikropul	289S-10-20-T	N/A
XVII. Kiln 6 - D5 Finish Mill System						
D5-SB1	Clinker Storage Bin	500 tons	K6	N/A	N/A	N/A
D5-SB2	Gypsum Storage Bin	250 tons	K6	N/A	N/A	N/A
D5-SB3	Additive/LS Storage Bin	250 tons	K6	N/A	N/A	N/A
D5-SB4	Mill Feed Storage Bin	30 tons	K6	N/A	N/A	N/A
D5-SB5	Bin - Rejects	20 tons	K6	N/A	N/A	N/A
D5-WF1	Belt Weigh Feeder	160 tph	K6	N/A	N/A	N/A
D5-WF2	Belt Weigh Feeder	160 tph	K6	N/A	N/A	N/A
D5-WF3	Belt Weigh Feeder	160 tph	K6	N/A	N/A	N/A
D5-BC1	Belt Conveyor	160 tph	K6	N/A	N/A	N/A
D5-BE1	Bucket Elevator	160 tph	K6	N/A	N/A	N/A
D5-BC2	Belt Conveyor	160 tph	K6	N/A	N/A	N/A
D5-BC2-MGT	Magnetic Separator	N/A	K6	N/A	N/A	N/A
D5-BC2-ML	Metal Detector	N/A	K6	N/A	N/A	N/A
D5-DG1	Diverter Gate	160 tph	K6	N/A	N/A	N/A
D5-BC3	Belt Conveyor	160 tph	K6	N/A	N/A	N/A
D5-FM-RF	Rotary Airlock	160 tph	K6	N/A	N/A	N/A
D5-FM	OK-4 Roller Mill	160 tph	K6	N/A	N/A	N/A
D5-SS1	Separator	160 tph	K6	N/A	N/A	N/A
D5-FM-VB	Vibrating Feeder	160 tph	K6	N/A	N/A	N/A
D5-BC4	Belt Conveyor	160 tph	K6	N/A	N/A	N/A
D5-CC1	Cyclone	160 tph	K6	N/A	N/A	N/A
D5-CC2	Cyclone	160 tph	K6	N/A	N/A	N/A
D5-HTR	Natural Gas Heater	N/A	K6	N/A	N/A	N/A
D5-AS1	Air slide	160 tph	K6	N/A	N/A	N/A
D5-AS2	Air slide	160 tph	K6	N/A	N/A	N/A

EQUIPMENT ID	EQUIPMENT TYPE	MAX. CAPACITY	YEAR INSTALLED	MANUFACTURER	MODEL	SERIAL NUMBER
D5-CX1	Powder cooler	160 tph	K6	N/A	N/A	N/A
D5-CX2	Powder cooler	160 tph	K6	N/A	N/A	N/A
D5-FP1	FK Pump	160 tph	K6	N/A	N/A	N/A
D5-FC1	FK Compressor	160 tph	K6	N/A	N/A	N/A
D5-DC1	Dust Collector	N/A	K6	N/A	N/A	N/A
D5-DC2	Dust Collector	N/A	K6	N/A	N/A	N/A
D5-PC	Product Collector	N/A	K6	N/A	N/A	N/A
XVI. Product Storage and Bulk Loadout						
BL-AS1	Air Slide	276 tph	N/A	N/A	N/A	N/A
BL-AS1B	Air Slide	276 tph	N/A	N/A	N/A	N/A
BL-AS2	Air Slide	400 tph	N/A	N/A	N/A	N/A
BL-AS2A	Air Slide	276 tph	N/A	N/A	N/A	N/A
BL-AS2B	Air Slide	276 tph	N/A	N/A	N/A	N/A
BL-AS3	Air Slide	276 tph	N/A	N/A	N/A	N/A
BL-AS3A	Air Slide	276 tph	N/A	N/A	N/A	N/A
BL-AS3B	Air Slide	276 tph	N/A	N/A	N/A	N/A
BL-AS4	Air Slide	276 tph	N/A	N/A	N/A	N/A
BL-AS5	Air Slide	276 tph	N/A	N/A	N/A	N/A
BL-AS6	Air Slide	276 tph	N/A	N/A	N/A	N/A
BL-DC3-AS1	Air Slide	276 tph	N/A	N/A	N/A	N/A
BL-DC4-AS1	Air Slide	276 tph	N/A	N/A	N/A	N/A
BL-SB5-AS1	Air Slide	276 tph	N/A	N/A	N/A	N/A
BL-SB5-AS2	Air Slide	276 tph	N/A	N/A	N/A	N/A
BL-SB6-OTAS	Air Slide	276 tph	N/A	N/A	N/A	N/A
CM-A1	Alleviator	276 tph	1970	N/A	N/A	N/A
CM-A2	Alleviator	276 tph	1971	N/A	N/A	N/A
CM-A3	Alleviator	276 tph	1971	N/A	N/A	N/A
CM-A4	Alleviator	276 tph	1971	N/A	N/A	N/A
CM-A5	Alleviator	276 tph	1971	N/A	N/A	N/A

EQUIPMENT ID	EQUIPMENT TYPE	MAX. CAPACITY	YEAR INSTALLED	MANUFACTURER	MODEL	SERIAL NUMBER
CM-A1-AS13 through CM-A1-AS18	Air slides	276 tph	1971	N/A	N/A	N/A
CM-A2-AS13 through CM-A2-AS18	Air slides	276 tph	1971	N/A	N/A	N/A
CM-A3-AS13 through CM-A3-AS18	Air slides	276 tph	1971	N/A	N/A	N/A
CM-A4-AS13 through CM-A4-AS18	Air slides	276 tph	1971	N/A	N/A	N/A
CM-A5-AS13 through CM-A5-AS18	Air slides	276 tph	1971	N/A	N/A	N/A
BL-BE1	Bucket Elevator	450 tph	1959	N/A	N/A	N/A
BL-BE2	Bucket Elevator	450 tph	1959	N/A	N/A	N/A
BL-BE3	Bucket Elevator	450 tph	1999	N/A	N/A	N/A
BL-RS1	Rotary Screen	276 tph	N/A	N/A	N/A	N/A
BL-RS2	Rotary Screen	276 tph	N/A	N/A	N/A	N/A
BL-RS3	Rotary Screen	276 tph	N/A	N/A	N/A	N/A
BL-SC1A	Screw Conveyor	276 tph	N/A	N/A	N/A	N/A
BL-SC1B	Screw Conveyor	276 tph	N/A	N/A	N/A	N/A
BL-SC2	Screw Conveyor	276 tph	1959	N/A	N/A	N/A
BL-SC3	Screw Conveyor	276 tph	1959	N/A	N/A	N/A
BL-SC4	Screw Conveyor	276 tph	1959	N/A	N/A	N/A
BL-SC5	Screw Conveyor	276 tph	1959	N/A	N/A	N/A
BL-SC6	Screw Conveyor	276 tph	N/A	N/A	N/A	N/A
BL-SC7	Screw Conveyor	276 tph	N/A	N/A	N/A	N/A
BL-SB3-SC	Screw Conveyor	276 tph	N/A	N/A	N/A	N/A
BL-AS5-SC1	Screw Conveyor	276 tph	N/A	N/A	N/A	N/A

EQUIPMENT ID	EQUIPMENT TYPE	MAX. CAPACITY	YEAR INSTALLED	MANUFACTURER	MODEL	SERIAL NUMBER
BL-AS5-SC2	Screw Conveyor	276 tph	N/A	N/A	N/A	N/A
CM-SC5	Screw Conveyor	276 tph	N/A	N/A	N/A	N/A
BL-SB1	Storage Bin	150 Tons	N/A	N/A	N/A	N/A
BL-SB2	Storage Bin	150 Tons	N/A	N/A	N/A	N/A
BL-SB3	Storage Bin	150 Tons	N/A	N/A	N/A	N/A
BL-SB4	Storage Bin	150 Tons	N/A	N/A	N/A	N/A
BL-SB5	Storage Bin	850 Tons	1975	N/A	N/A	N/A
BL-SB6	Storage Bin	100 tons	N/A	N/A	N/A	N/A
CS-SB1	Storage Silo	1300 Tons	1955	N/A	N/A	N/A
CS-SB2	Storage Silo	1300 Tons	1955	N/A	N/A	N/A
CS-SB3	Storage Silo	1300 Tons	1955	N/A	N/A	N/A
CS-SB4	Storage Silo	1300 Tons	1955	N/A	N/A	N/A
CS-SB5	Storage Silo	1300 Tons	1955	N/A	N/A	N/A
CS-SB6	Storage Silo	1300 Tons	1955	N/A	N/A	N/A
CS-SB7	Storage Silo	1300 Tons	1955	N/A	N/A	N/A
CS-SB8	Storage Silo	1300 Tons	1955	N/A	N/A	N/A
CS-SB9	Storage Silo	1300 Tons	1955	N/A	N/A	N/A
CS-SB10	Storage Silo	1300 Tons	1955	N/A	N/A	N/A
CS-SB11	Storage Silo	1300 Tons	1955	N/A	N/A	N/A
CS-SB12	Storage Silo	1300 Tons	1955	N/A	N/A	N/A
CS-SB13	Storage Silo	1300 Tons	1955	N/A	N/A	N/A
CS-SB14	Storage Silo	1300 Tons	1955	N/A	N/A	N/A
CS-SB15	Storage Silo	1300 Tons	1955	N/A	N/A	N/A
CS-SB16	Storage Silo	1300 Tons	1955	N/A	N/A	N/A
CS-SB17	Storage Silo	1300 Tons	1955	N/A	N/A	N/A
CS-SB18	Storage Silo	1300 Tons	1955	N/A	N/A	N/A
CS-SB19	Storage Silo	3100 Tons	pre 1970	N/A	N/A	N/A
CS-SB20	Storage Silo	3100 Tons	pre 1970	N/A	N/A	N/A
CS-SB21	Storage Silo	3100 Tons	pre 1970	N/A	N/A	N/A

EQUIPMENT ID	EQUIPMENT TYPE	MAX. CAPACITY	YEAR INSTALLED	MANUFACTURER	MODEL	SERIAL NUMBER
CS-SB22	Storage Silo	3100 Tons	pre 1970	N/A	N/A	N/A
CS-SB23	Storage Silo	3100 Tons	pre 1970	N/A	N/A	N/A
BL-SB5-DC1	Dust Collector	N/A	1980	Mikropul	36S-8-30	N/A
BL-SB5-DC2	Dust Collector	N/A	1980	Mikropul	25S-8-30	79261H
BL-SB5-DC3	Dust Collector	N/A	1980	Mikropul	25S-8-30	79318H1
BL-DC1	Dust Collector	N/A	1984	Mikropul	49S-8-20	845034H1
BL-DC2	Dust Collector	N/A	1984	Mikropul	49S-8-20	845038H1
BL-DC3	Dust Collector	N/A	1984	Mikropul	100S-8-20	845060H1
BL-DC4	Dust Collector	N/A	1984	Mikropul	100S-8-20	845060H2
BL-DC5	Dust Collector	N/A	1950's	Nordblow	BA-12	960-20
BL-DC6	Dust Collector	N/A	1986	Mikropul	100S-8-20	860058
BL-DC7	Dust Collector	N/A	1984	Mikropul	49S-10-20B	79545H1
CM-DC8	Dust Collector	N/A	1980	Mikropul	144S-6-20	76583H1
CM-DC9	Dust Collector	N/A	1973	Mikropul	130S-8-20	71-H-1179
CM-DC10	Dust Collector	N/A	1973	Mikropul	130S-8-20	71-H-1179
CM-DC11	Dust Collector	N/A	1973	Mikropul	130S-8-20	71-H-1180
CM-DC12	Dust Collector	N/A	1973	Mikropul	130S-8-20	71-H-1981
CM-DC14	Dust Collector	N/A	1987	Fuller	196C10	N/A
CM-DC15	Dust Collector	N/A	1987	Fuller	196C10	N/A
CM-DC16	Dust Collector	N/A	1987	Fuller	196C10	N/A
CM-DC17	Dust Collector	N/A	2001	N/A	N/A	N/A
XVIII. Kiln 6- Cement Silos						
CS-SB24	Silo	6700 tons	K6	N/A	N/A	N/A
CS-SB25	Silo	6700 tons	K6	N/A	N/A	N/A
CS-SB26	Silo	6700 tons	K6	N/A	N/A	N/A
BL-SC8	Screw Conveyor	300 tph	K6	N/A	N/A	N/A
CM-DC18	Dust Collector	N/A	K6	N/A	N/A	N/A
BL-DC8	Dust Collector	N/A	K6	N/A	N/A	N/A
XIX. Kiln 6- Bulk Loading						

EQUIPMENT ID	EQUIPMENT TYPE	MAX. CAPACITY	YEAR INSTALLED	MANUFACTURER	MODEL	SERIAL NUMBER
BL-SB7	Storage Bin	500 tons	K6	N/A	N/A	N/A
BL-SB7-AS	Air Slide	500 tph	K6	N/A	N/A	N/A
BL-SB7-SPT	Loading Spout	500 tph	K6	N/A	N/A	N/A
BL-SB7-DC1	Dust Collector	N/A	K6	N/A	N/A	N/A
BL-SPT-DC	Dust Collector	N/A	K6	N/A	N/A	N/A
XX. Cement Packhouse						
PH-DC-AS	Air Slide	276 tph	N/A	N/A	N/A	N/A
PH-PK3-BC1	Belt Conveyor	276 tph	1950	St. Regis	N/A	N/A
PH-PK3-BC2	Belt Conveyor	276 tph	1969	St. Regis	N/A	N/A
PH-PK3-BC4	Belt Conveyor	276 tph	1969	St. Regis	N/A	N/A
PH-PK3-BC5	Belt Conveyor	276 tph	1969	St. Regis	N/A	N/A
PH-PK4-BC1	Belt Conveyor	276 tph	1950	St. Regis	N/A	N/A
PH-BC2	Belt Conveyor	276 tph	1969	St. Regis	N/A	N/A
PH-PZ2-BC1	Belt Conveyor	276 tph	N/A	N/A	N/A	N/A
PH-PZ2-BC2	Belt Conveyor	276 tph	N/A	N/A	N/A	N/A
PH-PZ2-BC3	Belt Conveyor	276 tph	N/A	N/A	N/A	N/A
PH-PZ2-BC4	Belt Conveyor	276 tph	N/A	N/A	N/A	N/A
PH-PZ2-BC5	Belt Conveyor	276 tph	N/A	N/A	N/A	N/A
PH-BE1	Bucket Elevator	276 tph	1948	N/A	N/A	N/A
PH-BE2	Bucket Elevator	276 tph	1952	N/A	N/A	N/A
PH-FP1	Pneumatic Conveyor	276 tph	N/A	N/A	N/A	N/A
PH-FC1	Pneumatic Conveyor	276 tph	N/A	N/A	N/A	N/A
PH-FC2	Pneumatic Conveyor	276 tph	N/A	N/A	N/A	N/A
PH-PK3	Cement Packer	276 tph	2003	Mollers	N/A	N/A
PH-PK4	Cement Packer	276 tph	1950	N/A	N/A	N/A
PH-PZ2	Palletizer	N/A	1999	Mollers	N/A	N/A
PH-PZ3	Palletizer	N/A	1999	Mollers	N/A	N/A
PH-PZ2-GRC	Roller Conveyor	276 tph	1999	Mollers	N/A	N/A
PH-PZ2-PRC1	Roller Conveyor	276 tph	1999	Mollers	N/A	N/A

EQUIPMENT ID	EQUIPMENT TYPE	MAX. CAPACITY	YEAR INSTALLED	MANUFACTURER	MODEL	SERIAL NUMBER
PH-PZ2-PRC2	Roller Conveyor	276 tph	1999	Mollers	N/A	N/A
PH-RS1	Rotary Screen	276 tph	N/A	N/A	N/A	N/A
PH-RS2	Rotary Screen	276 tph	N/A	N/A	N/A	N/A
PH-PK3-SC1	Screw Conveyor	276 tph	1950	N/A	N/A	N/A
PH-SC1	Screw Conveyor	276 tph	1959	N/A	N/A	N/A
PH-SC2	Screw Conveyor	276 tph	N/A	N/A	N/A	N/A
PH-SC3	Screw Conveyor	276 tph	1959	N/A	N/A	N/A
PH-SC4	Screw Conveyor	276 tph	N/A	N/A	N/A	N/A
PH-SC5	Screw Conveyor	276 tph	N/A	N/A	N/A	N/A
PH-SC6	Screw Conveyor	276 tph	1969	N/A	N/A	N/A
PH-SC8N	Screw Conveyor	276 tph	1959	N/A	N/A	N/A
PH-SC8S	Screw Conveyor	276 tph	1959	N/A	N/A	N/A
PH-SC9	Screw Conveyor	276 tph	1959	N/A	N/A	N/A
PH-PZ2-SC1	Screw Conveyor	276 tph	N/A	N/A	N/A	N/A
PH-PK3-SE1A	Sack Elevator	276 tph	1950	N/A	N/A	N/A
PH-PK3-SE1B	Sack Elevator	276 tph	1950	N/A	N/A	N/A
PH-PZ2-SE1A	Sack Elevator	276 tph	N/A	N/A	N/A	N/A
PH-PZ2-SE1B	Sack Elevator	276 tph	N/A	N/A	N/A	N/A
PH-SB1	Storage Bin	N/A	N/A	N/A	N/A	N/A
PH-SB2	Storage Bin	N/A	N/A	N/A	N/A	N/A
PH-DC1	Dust Collector	N/A	1979	Mikropul	144S-10-20	79296H1
PH-DC2	Dust Collector	N/A	1979	Mikropul	144S-10-20	79296H2
PH-DC3	Dust Collector	N/A	1985	Mikropul	100S-8-20	855258H1
PH-DC4	Dust Collector	N/A	1985	Mikropul	100S-8-20	855259
PH-DC5	Dust Collector	N/A	1975	Mikropul	100S-8-20	N/A
XXI. Solid Fuel (Coal/Coke) System						
R6-BC2	Belt Conveyor	50 tph	N/A	N/A	N/A	N/A
R6-BC3	Belt Conveyor	50 tph	N/A	N/A	N/A	N/A
R6-BC3-BS	Belt Scale	50 tph	N/A	N/A	N/A	N/A

EQUIPMENT ID	EQUIPMENT TYPE	MAX. CAPACITY	YEAR INSTALLED	MANUFACTURER	MODEL	SERIAL NUMBER
H3-K4-CM	Coal Mill	25 tph	N/A	Raymond	713	N/A
H3-K4-CM-SS	Separator	25 tph	N/A	Raymond	N/A	N/A
H3-K4-CM-CC	Cyclone	25 tph	N/A	C.E.	N/A	N/A
R6-OC	Overhead Crane	N/A	N/A	N/A	N/A	N/A
R6-RP1	Rotary Crusher	50 tph	N/A	N/A	N/A	N/A
R6-SC1	Screw Conveyor	50 tph	N/A	N/A	N/A	N/A
R6-SC2	Screw Conveyor	50 tph	N/A	N/A	N/A	N/A
R6-SB	Silo	2500 tons	N/A	N/A	N/A	N/A
H3-K4-CM-SB	Storage Bin	150 tons	N/A	N/A	N/A	N/A
R6-VF1	Vibrating Feed Hopper	50 tph	N/A	N/A	N/A	N/A
R6-VF2	Vibrating Feed Hopper	50 tph	N/A	N/A	N/A	N/A
R6-VF3	Vibrating Feed Hopper	50 tph	N/A	N/A	N/A	N/A
R6-VF4	Vibrating Feed Hopper	50 tph	N/A	N/A	N/A	N/A
R6-VF5	Vibrating Feed Hopper	50 tph	N/A	N/A	N/A	N/A
R6-BA1	Vibrating Feeder	50 tph	N/A	N/A	N/A	N/A
R6-BA2	Vibrating Feeder	50 tph	N/A	N/A	N/A	N/A
R6-BA3	Vibrating Feeder	50 tph	N/A	N/A	N/A	N/A
H3-K4-BS1	Weigh Belt Feeder	25 tph	N/A	Thayer	N/A	N/A
H3-K4-BS1-SC	Scavenging Screw	25 tph	N/A	N/A	N/A	N/A
R6-BC1A	Belt Conveyor	300 tph	K6	N/A	N/A	N/A
R6-BC1B	Belt Conveyor	300 tph	K6	N/A	N/A	N/A
R6-BC4	Belt Conveyor	300 tph	K6	N/A	N/A	N/A
R6-BC5	Belt Conveyor	300 tph	K6	N/A	N/A	N/A
R6-BC6	Belt Conveyor	300 tph	K6	N/A	N/A	N/A
R6-BC7	Belt Conveyor	300 tph	K6	N/A	N/A	N/A

EQUIPMENT ID	EQUIPMENT TYPE	MAX. CAPACITY	YEAR INSTALLED	MANUFACTURER	MODEL	SERIAL NUMBER
R6-BE1	Bucket Elevator	300 tph	K6	N/A	N/A	N/A
R6-RDS	Stacker	300 tph	K6	N/A	N/A	N/A
R6-RP2	Rotary Crusher	300 tph	K6	N/A	N/A	N/A
H3-SB1	Storage Bin	1000 tons	K6	N/A	N/A	N/A
H3-SB2	Storage Bin	670 tons	K6	N/A	N/A	N/A
H3-SB3	Storage Bin	75 tons	K6	N/A	N/A	N/A
H3-SB4	Storage Bin	10 tons	K6	N/A	N/A	N/A
H3-BC1	Belt Conveyor	40 tph	K6	N/A	N/A	N/A
H3-BC2	Belt Conveyor	40 tph	K6	N/A	N/A	N/A
H3-BC3	Belt Conveyor	40 tph	K6	N/A	N/A	N/A
H3-BC3-DG	Diverter Gate	40 tph	K6	N/A	N/A	N/A
H3-MGT	Magnetic Separator	N/A	K6	N/A	N/A	N/A
H3-ML	Metal Detector	N/A	K6	N/A	N/A	N/A
H3-CM1-SCF	Screw Feeder	40 tph	K6	N/A	N/A	N/A
H3-CC1	Cyclone	40 tph	K6	N/A	N/A	N/A
H3-CM1	Coal Mill	40 tph	K6	N/A	N/A	N/A
H3-CM1-SS	Separator	40 tph	K6	N/A	N/A	N/A
H3-SC1	Screw Conveyor	40 tph	K6	N/A	N/A	N/A
H3-WF1	Rotor Scale	40 tph	K6	N/A	N/A	N/A
H3-WF2	Rotor Scale	40 tph	K6	N/A	N/A	N/A
H3-WF1-BL	Conveying Blower	40 tph	K6	N/A	N/A	N/A
H3-WF2-BL	Conveying Blower	40 tph	K6	N/A	N/A	N/A
H3-WF-BL	Conveying Blower	40 tph	K6	N/A	N/A	N/A
H3-DC1-SC	Screw Conveyor	40 tph	K6	N/A	N/A	N/A
H3-CO2	CO2 Inerting System	N/A	K6	N/A	N/A	N/A
H3-K4-WF1-SB	Storage Bin	10 tons	N/A	N/A	N/A	N/A
H3-K4-WF2-SB	Storage Bin	10 tons	N/A	N/A	N/A	N/A
H3-K4-WF1	Fuel Feeder	207 stph	N/A	Pfister	N/A	N/A

EQUIPMENT ID	EQUIPMENT TYPE	MAX. CAPACITY	YEAR INSTALLED	MANUFACTURER	MODEL	SERIAL NUMBER
H3-K4-WF2	Fuel Feeder	207 stph	N/A	Pfister	N/A	N/A
H3-K4-DC1	Dust Collector	N/A	1990	Mikropul	N/A	N/A
H3-K4-DC1-SC	Screw Conveyor	40tph	1990	N/A	N/A	N/A
H3-K4-DC2	Dust Collector	N/A	1990	Mikropul	N/A	N/A
H3-DC1	Dust Collector	N/A	K6	N/A	N/A	N/A
H3-DC2	Dust Collector	N/A	K6	N/A	N/A	N/A
H3-DC3	Dust Collector	N/A	K6	N/A	N/A	N/A
XXII: Twin Peaks Rock and Stone Aggregate Plant						
F-2	Vibrating Grizzly Feeder	800 tph	1985	Diester	5x22	64-177
CR-3	Jaw Crusher	450 tph	1985	Kue Ken	34x42 Jaw	120S12857R
C-4	Belt Conveyor	800 tph	1985	Spaulding	48x28	TR143-85-1338
C-5	Belt Conveyor	800 tph	1985	Spaulding	42x80	80x42T-85-1339
S-6	Screen	800 tph	1985	Diester	6x20 2 D	398592
C-6	Conveyor	400 tph	1985	Spaulding	36x18	TR144-85-1340
C-7	Conveyor	400 tph	1985	Spaulding	36x60	60x36T-85-1341
S-11	Screen	400 tph	1985	Diester	6x20 3 D	398593
S-12	Screen	400 tph	1985	Diester	6x20 3 D	398594
C-11	Belt Conveyor	400 tph	1985	Spaulding	36x18	TR145-85-1343
C-12	Belt Conveyor	400 tph	1985	Spaulding	36x18	TR145-85-1350
C-16	Radial Stacker	400 tph	1985	Spaulding	30x100RS	100x30T-85-1347
C-21	Belt Conveyor	400 tph	1985	Spaulding	24x54	78x24T-85-1353
C-22	Radial Stacker	800 tph	1985	Spaulding	N/A	100-36T-85-1359
C-26	Belt Conveyor	300 tph	1985	N/A	30x30	N/A
C-10	Belt Conveyor	400 tph	1985	N/A	30x100	N/A
C-13	Belt Conveyor	300 tph	1985	N/A	30x60	N/A
C-15	Belt Conveyor	300 tph	1985	N/A	30x60	N/A
C-27	Belt Conveyor	300 tph	1985	N/A	30x60	N/A
C-17	Belt Conveyor	400 tph	1985	N/A	30x30	N/A

EQUIPMENT ID	EQUIPMENT TYPE	MAX. CAPACITY	YEAR INSTALLED	MANUFACTURER	MODEL	SERIAL NUMBER
Hopper 1	Hopper	N/A	1985	N/A	N/A	N/A
Hopper 2	Hopper	N/A	1985	N/A	N/A	N/A
N/A	Belt Conveyor	200 tph	1985	Spaulding	24x37	33x24T-85-1359
N/A	Stacker	200 tph	1985	Spaulding	24x100 FS	100x24T-85-1358
N/A	Portable Feeder Conveyor	200 tph	1985	Helmick	30x68	4635-1330-60-83B
N/A	Portable Crushers (Maximum Qty: 3)	895 tph (combined)	N/A	N/A	N/A	N/A
N/A	Portable Screens (Maximum Qty: 4)	2,006 tph (combined)	N/A	N/A	N/A	N/A
N/A	Portable Conveyors (Maximum Qty: 15)	4,483 tph (combined)	N/A	N/A	N/A	N/A
XXII: Portable Grizzly Screen						
R1-SGR	Portable Grizzly Screen for Processing Gypsum or Limestone	50 tons/hour	April 2009	Designed and fabricated on site	N/A	N/A
R1-SGR	Portable Grizzly Screen for Processing Clinker or Iron	50 tons/hour	April 2009	Designed and fabricated on site	N/A	N/A
XXIII. Fuel Burning Equipment						
Bunker C boiler	Natural Gas Boiler	6.275 MMBtu/hr	N/A	N/A	N/A	N/A
D4-RM1-HTR	Natural Gas Heater	75 MMBtu/hr	N/A	N/A	N/A	N/A
D5-HTR	Natural Gas Heater	11.3 MMBtu/hr	K6	N/A	N/A	N/A
Emergency Generator	Diesel	13 MMBtu/hr	N/A	N/A	N/A	N/A
Direct fired heaters (2)	Natural Gas	2 MMBtu/hr	N/A	N/A	N/A	N/A
Heating boiler	Natural Gas Boiler	0.825 MMBtu/hr	N/A	N/A	N/A	N/A
Radiant heaters (7)	Natural Gas	0.03 MMBtu/hr	N/A	N/A	N/A	N/A

EQUIPMENT ID	EQUIPMENT TYPE	MAX. CAPACITY	YEAR INSTALLED	MANUFACTURER	MODEL	SERIAL NUMBER
Carpenter Shop Unit Heater	Natural Gas	0.1 MMBtu/hr	N/A	N/A	N/A	N/A
Office Furnaces (2)	Natural Gas	0.08 MMBtu/hr	N/A	N/A	N/A	N/A
Office Furnace	Natural Gas	0.05 MMBtu/hr	N/A	N/A	N/A	N/A
Office Furnace	Natural Gas	0.18 MMBtu/hr	N/A	N/A	N/A	N/A
Furnaces (3)	Natural Gas	0.04 MMBtu/hr	N/A	N/A	N/A	N/A
Furnaces (3)	Natural Gas	0.025 MMBtu/hr	N/A	N/A	N/A	N/A
Unit heater (3)	Natural Gas	0.25 MMBtu/hr	N/A	N/A	N/A	N/A
Unit heater (2)	Natural Gas	0.075 MMBtu/hr	N/A	N/A	N/A	N/A
Unit heater	Natural Gas	0.3 MMBtu/hr	N/A	N/A	N/A	N/A
Water heater	Natural Gas Boiler	0.04 MMBtu/hr	N/A	N/A	N/A	N/A
Water heater	Natural Gas Boiler	0.075 MMBtu/hr	N/A	N/A	N/A	N/A
Water heater	Natural Gas Boiler	0.046 MMBtu/hr	N/A	N/A	N/A	N/A
XXIV. Petroleum Storage Tanks/Vessels						
Used Oil	Above ground	800 gallons	N/A	N/A	N/A	N/A
Diesel	Above ground	50,000 gallons	pre-1980	N/A	N/A	N/A
Lube Tank (3)	Above ground	1,000 gallons	N/A	N/A	N/A	N/A
Gasoline	Underground	12,000 gallons	1986	N/A	N/A	N/A
On-specification Used Oil	Above ground	31,000 gallons	N/A	N/A	N/A	N/A
On-specification Used Oil (2)	Above ground	28,700 gallons	N/A	N/A	N/A	N/A
Bunker C	Aboveground	50,000 bbl	1972	N/A	N/A	N/A

Appendix-1

Phase I Dust Control Plan

Kilns 1-4

PHASE I UNPAVED ROAD DUST CONTROL PLAN

ARIZONA PORTLAND CEMENT COMPANY

RILLITO, ARIZONA

SUBMITTED FOR APPROVAL TO:

Arizona Department of Environmental Quality
1110 West Washington Street
Phoenix, Arizona 85007

April 4, 2008

TABLE OF CONTENTS

Page

1. INTRODUCTION 1

2. UNPAVED ROAD SYSTEM 1
   2.1 Unpaved Road Traffic 1
   2.2 Description of Control Measures 1

3. DUST CONTROL PLAN 2
   3.1 Description of Dust Control Plan 2
   3.2 Demonstration that the Dust Control Plan Provides a 65% Control Efficiency 3

4. RECORDS OF TREATMENT APPLICATION 3

5. MODIFICATIONS TO THE DUST CONTROL PLAN 4

APPENDIX A: *FIELD TESTS OF UNPAVED ROAD DUST CONTROL, FINAL REPORT*, MRI Project No. 310559.1.002, March 13, 2006

APPENDIX B: DRAFT RECORDKEEPING FORM

1. INTRODUCTION

Air Quality Permit No. M190310P1-00 requires that Arizona Portland Cement Company (APCC) conduct tests to demonstrate that 65% control efficiency has been achieved on unpaved roads at APCC's facility and, based on those test results, submit a revised Phase I Dust Control Plan to the Arizona Department of Environmental Quality (ADEQ).

APCC retained Midwest Research Institute (MRI) to conduct a three-series field testing program to evaluate whether measures used to control unpaved road dust at APCC's facility provide 65% control of particulate matter. MRI's report is attached as Appendix A. It concludes, "the data collected during the testing program demonstrate that APC[C] has consistently achieved 65% control for all of the roads in use at its facility."

This document presents APCC's revised Phase I Dust Control Plan, based on MRI's field tests, to continuously achieve and demonstrate 65% average dust control efficiency from the following unpaved roads:

1. All active roads at the quarry and unpaved portions of the Quarry Road;

2. All active unpaved roads at the cement plant.

Section 2 provides background information concerning traffic on APCC's unpaved road system and unpaved road dust control measures. Section 3 describes the dust control plan and the demonstration that the controls used achieve 65% control efficiency. The monitoring and recordkeeping requirements that will be used to demonstrate compliance with the dust control plan are presented in Section 4. Modifications to the Dust Control Plan will be made in accordance with Section 5.

2. UNPAVED ROAD SYSTEM

2.1 UNPAVED ROAD TRAFFIC

Traffic on unpaved roads at the cement plant consists primarily of import trucks delivering additives to storage piles, haul trucks transporting additives delivered by rail to storage piles, haul trucks transporting limestone to storage piles, front-end loaders transporting additives and limestone to feed hoppers, and front-end loaders transporting coal and petroleum coke to and from storage piles. Traffic on unpaved roads at the quarry consists primarily of haul trucks transporting limestone and waste rock/overburden from the quarry face.

2.2 DESCRIPTION OF CONTROL MEASURES

APCC uses both chemical stabilizers and watering to control emissions from unpaved roads at the cement plant and the quarry. Lignin sulfonate is applied to unpaved roads at the cement plant, and Coherex, a petroleum resin-based stabilizer, and Lignin are applied to unpaved roads at the quarry.

Routine application of these chemical stabilizers over several years has stabilized the surfaces of the unpaved roads, which has reduced loose materials available for resuspension by traffic. However, loose material can deposit on the stabilized road surfaces through atmospheric deposition of particulate matter from the air or through trackout or spillage of material onto the stabilized road surfaces. Routine treatment of the unpaved roads by APCC agglomerates this loose material to provide additional emission control.

3. DUST CONTROL PLAN

3.1 DESCRIPTION OF DUST CONTROL PLAN

The dust control plan includes the following:

1. Barring access (by the use of gates, berms, steel cable, marker cones, or other physical barriers) to all road sections which will not be controlled; and

2. Implementing the following observation/ treatment control program, which will achieve an average 65% or better control of emissions of particulate matter (PM) and particulate matter less than or equal to 10 microns nominal aerodynamic diameter (PM_{10}). Treatment denotes an application of water or a water and chemical dust suppressant blend.

Observation/Treatment Schedule

	Observation/Treatment Schedule
Cement Plant	
Coal yard loop	• Apply treatment at start of shift, unless conditions do not warrant application. • Observe again approximately 30 minutes later. Apply treatment if necessary. • Observe approximately every 90 minutes while traffic is present and apply treatment unless conditions do not warrant application.
Other roads	• Apply treatment at start of shift, unless conditions do not warrant application. • Observe again approximately 75 minutes later. Apply treatment if necessary. • Observe approximately every 135 minutes while traffic is present and apply treatment unless conditions do not warrant application.
Quarry	• Apply treatment at start of shift, unless conditions do not warrant application. • Observe approximately every 240 minutes while traffic is present and apply treatment unless conditions do not warrant application.

The observation/treatment frequencies are based on the following observations:

a) Treatment begins at the start of day shift and suspends at the end of day shift or by mid-swing shift, unless conditions do not warrant application. Day shift activities, which are the major traffic generators at the plant and quarry, usually run between 8 and 12 hours.

b) Due to spillage and trackout, the coal yard loop is considered separately from other roads at the cement plant.

c) The initial averaging period is taken from the "lowest performing" test in Figures 3-3 through 3-6 of Appendix A. For example, the 30-min interval for the coal yard loop is based on the curve for the CRO-1047 test series in Figure 3-5. In that curve, 65% average control occurs at approximately 35 minutes after application. The 75-min period for other cement plant roads follows from the lowest performing test series at either the stacker reclaimer road or the east yard. Finally, the 240-min value for the quarry corresponds to the CRO-1027 test series in Figure 3-6[1].

d) The 90-min subsequent application interval for the coal yard loops follows from the average curve in Figure 3-5 in Appendix A. The 135-min interval was found by combining the "average" curves in Figures 3-3, 3-4 and 3-5. The 240-min value for the quarry follows from Figure 3-6 by the same reasoning as in item c).

The proposed observation/treatment schedule represents worst case application frequencies. Meteorological and other site-specific conditions (i.e. rainfall, low evaporation, damp surfaces, etc.) may dictate less frequent applications at certain times. Every active road segment will be observed according to the treatment frequency schedule above. If no application is needed on a road segment at the time of the periodic observation, then the periodic application will be resumed when conditions warrant.

3.2 DEMONSTRATION THAT THE DUST CONTROL PLAN PROVIDES A 65% CONTROL EFFICIENCY

MRI conducted comprehensive field tests at APCC's facility. MRI's Final Report, entitled "Field Tests of Unpaved Road Dust Control," dated March 13, 2006, (attached as Appendix A) demonstrates that this plan will continue to achieve, maintain, and demonstrate an average 65% control efficiency.

4. RECORDS OF TREATMENT APPLICATION

Records which will be maintained demonstrating compliance with the treatment application requirements of the Dust Control Program are as follows:

1. Time and date of application
2. Explanation if no application needed
3. Initials of person completing the records and any applicable comments.

An example of a hypothetical set of records is presented in Appendix B.

---

[1] All the average control values plotted in Figure 3-6 are above 75%. The 240-min application interval was chosen because it represents the longest period over which data were collected at the quarry.

5. MODIFICATIONS TO THE DUST CONTROL PLAN

Implementation of the dust control program will equal or exceed the required 65% average control efficiency for PM and PM_{10}. Modifications to this revised Phase I Dust Control Plan will be made by the submittal to ADEQ of the appropriate revision mechanism in Title 18, Chapter 2, Article 3 of the Arizona Administrative Code. All revisions will include a demonstration that the revised dust control plan will achieve 65% control efficiency for both PM and PM_{10}. Implementation of revisions to the revised Phase I Dust Control Plan will be made in accordance with the appropriate revision mechanisms in Title 18, Chapter 2, Article 3 of the Arizona Administrative Code.

Appendix-2

Operation &Maintenance Plan

Kilns 1-4

ARIZONA PORTLAND CEMENT COMPANY

P. O. Box 338
RILLITO, ARIZONA 85654

TEL: (520) 682-2221 FAX (520) 682-4345

Operations and Maintenance Plan

For affected sources under 40 CFR 63 Subpart LLL

Submitted for Approval to:

Arizona Department of Environmental Quality
1110 West Washington Street
Phoenix, Arizona 85007

March 17, 2008

Table of Contents

Section 1.0 Introduction 1
Section 2.0 Affected Sources 3
Section 3.0 General Operation and Maintenance Procedures 5
Section 3.1 Preventative Maintenance Procedures for Affected Sources 7
Section 3.2 Troubleshooting Procedures for Air Pollution Control Devices 10
Section 4.0 Corrective Actions When Required Pursuant to Section 63.1350(e) 12
Section 5.0 Procedure for Combustion System Operation and Inspection 14
Section 6.0 Opacity Monitoring Procedures 15

Attachment 1: Sample Work Orders and Inspection Sheets
Attachment 2: Sample Forms of Vibration Analysis
Attachment 3: Troubleshooting Procedures for Air Pollution Control Devices
Attachment 4: Sample Inspection Sheets for the Kiln Combustion Systems
Attachment 5: Indirect Coal Firing System "Safety and Maintenance Procedure Information" Manual for Kiln 4

Section 1.0 Introduction

Section 1.0 Introduction

Arizona Portland Cement Company (APCC) operates a cement plant and quarry in Rillito, Arizona. The cement plant is a Major Source of hazardous air pollutants (HAPs), and must therefore comply with the National Emission Standards for Hazardous Air Pollutants (NESHAP) From the Portland Cement Manufacturing Industry, set forth in 40 C.F.R. 63 Subpart LLL. Section 63.1350(a) of the NESHAP requires APCC to prepare an Operations and Maintenance Plan (O&M Plan) for each affected source subject to the provisions of Subpart LLL. Affected sources at APCC include kilns and in-line kilns/raw mills; clinker coolers; raw mills; finish mills; raw material dryers; raw material, clinker or finished product storage bins; conveying system transfer points; bagging systems; and bulk loading or unloading systems. This document is APCC's O&M Plan, and is designed to be a manual for APCC operators and technicians that are responsible for maintaining the affected sources and their associated air pollution control devices (APCDs) in proper operating condition.

The O&M Plan consists of 6 sections. Section 1.0 is an introduction. Section 2.0 refers to the list of all affected sources and/or APCDs. Section 3.0 states the General Operating and Maintenance Procedures for affected sources and APCDs. Section 3.1 generally describes preventative maintenance procedures for plant equipment including APCDs. Section 3.2 specifically describes troubleshooting procedures for APCDs. Section 4.0 briefly describes corrective actions to be taken when visible emissions are observed from the raw mill and finish mill APCDs. Section 5.0 describes preventative maintenance and maintenance procedures for the components of the combustion system of each kiln and each in-line kiln raw mill. Section 6.0 lists procedures to be used to periodically monitor affected sources subject to opacity standards under 40 CFR §§ 63.1346 and 63.1348.

Section 2.0 Affected Sources

Section 2.0 Affected Sources

All affected sources and their associated air pollution control devices are listed in the "Equipment List" in APCC's Class I Permit. This O&M Plan covers those affected sources listed in the "Equipment List" that are subject to permit conditions authorized by 40 CFR 63 subpart LLL.

APCC may make changes to the "Equipment List" without having to modify this O&M Plan.

Section 3.0 General Operation and Maintenance Procedures

Section 3.0 General Operation and Maintenance Procedures

Arizona Portland Cement Company (APCC) is committed to the safe and compliant operation and maintenance of equipment in the process of making portland cement. Proper and safe operation of equipment is determined through a conglomeration of industry standards, manufacturers recommendations, safety and health regulations, environmental regulations and over 50 years of continuous operation in the manufacture of cement.

APCC will follow the operation and maintenance procedures included in the Allis-Chalmers Instruction Book, Maintenance for Rotary Kilns for Kiln 4. Sections 3.1 and 3.2 of this Plan identify preventative maintenance and troubleshooting procedures for all of the affected sources and/or their associated air pollution control devices (APCDs). These procedures will be used in order to ensure compliance with the emission limits and operating limits of 40 C.F.R. §§ 63.1343 through 63.1348. Specifically, Section 3.1 identifies APCC's preventative maintenance procedures for affected sources, including associated APCDs. Section 3.2 identifies troubleshooting procedures for the APCDs.

Section 3.1 Preventative Maintenance Procedures for Affected Sources

Section 3.1 Preventative Maintenance Procedures for Affected Sources

Preventative Maintenance Inspections

Preventative maintenance, during which equipment will be inspected for defects, damage or wear, will be conducted pursuant to the following schedule:

- APCDs of affected sources (other than kiln systems) that are in continuous operation: At least once per year
- Kiln system equipment: During major kiln brick replacement
- Affected sources not in continuous operation: Per 8,760 hours of operation

Results of inspections will be recorded and repair work orders will be issued and completed as necessary. Sample inspection sheets of selected equipment/systems are included in Attachment 1. The inspection sheets may be modified periodically to meet the future needs of the facility and are therefore subject to change.

Periodic vibration analysis and thermography are performed on equipment deemed critical to the production of cement. The specific equipment and the frequency of the inspections are determined by the production requirements at the time. Sample forms of vibration analysis are found in Attachment 2. The sample vibration analysis forms may be modified periodically to meet the future needs of the facility and are therefore subject to change. The following chart is a list of equipment subject to Periodic Vibration Analysis. This chart will be revised automatically upon approval of future equipment changes or additions.

Equipment Subject to Periodic Vibration Analysis

Tag Name	Description
D3-1-DC2-DF	Dust Collector Draft Fan
D2-PC-DF	Dust Collector Draft Fan
CM7-DC3-DF	Dust Collector Draft Fan
D4-CC1-BL	Dust Collector Draft Fan
H5-GB-BL1	Bag House Draft Fan
H2-GB-BL	Cooler Bag House Draft Fan

All records, including inspection sheets and repair work orders, will be retained for a period of five (5) years.

Repair Work Orders

When problems occur or are observed during operation, a repair work order is written, as deemed necessary, by qualified personnel. The work order is determined to fit one of three priority categories: Emergency, Urgent or Routine. Emergency work orders are handled as soon as is feasible by maintenance personnel, who are on-hand 24 hours per day. Urgent work orders are addressed usually within 48 hours and Routine work orders are addressed as soon as is reasonable depending upon the production and maintenance schedules at the time.

Determination of the priority of the problem is based on safety hazards to plant personnel, potential compliance considerations, damage to equipment and production requirements. Any problems that result in immediate safety or compliance considerations are treated as an Emergency and addressed as soon as possible. Maintenance personnel are trained to diagnose and repair problems with air pollution control devices (APCDs).

Sample work orders for various equipment/systems are included in Attachment 4. The sample work orders may be modified periodically to meet the future needs of the facility and are therefore subject to change.

Section 3.2 Troubleshooting Procedures for Air Pollution Control Devices

Section 3.2 Troubleshooting Procedures for Air Pollution Control Devices

The chart in Attachment 3 identifies the troubleshooting procedures to be utilized by plant personnel (maintenance, production, or other) for the purpose of diagnosing a problem with an air pollution control device (APCD) associated with the affected sources. Also included in this section is a sample inspection sheet for the APCDs. The inspection sheet may be modified periodically to meet the future needs of the facility and is therefore subject to change.

Section 4.0 Corrective Actions When Required Pursuant to Section 63.1350(e)

Section 4.0 Corrective Actions When Required Pursuant to Section 63.1350(e)

When required pursuant to the opacity monitoring procedures in 40 CFR § 63.1350(e), APCC will initiate corrective action on the raw mills or finish mills. Section 63.1350(e) requires daily, six-minute visual emissions observations of mill sweep and air separator PM control devices for affected raw mills and finish mills. The visual emissions observations must be conducted in accordance with the EPA Method 22 and conducted while the affected raw mill or finish mill is operating at the highest load or capacity level reasonably expected to occur within the day. If visible emissions are observed, specific actions must be taken, as summarized below:

- Initiate, within one hour, the troubleshooting procedures as identified in Section 3.2.

- If necessary, prepare a work order pursuant to the procedures described in Section 3.1.

APCC will maintain a record of all work orders written pursuant to this Section and Section 3.1 for a period of five (5) years.

Section 5.0 Procedure for Combustion System Operation and Inspection

Section 5.0 Procedure for Combustion System Operation and Inspection

Arizona Portland Cement Company (APCC) is committed to the safe and compliant operation and maintenance of combustion system equipment in the process of making portland cement. Proper and safe operation of equipment is determined through a conglomeration of industry standards, manufacturers recommendations, safety and health regulations, environmental regulations and over 50 years of continuous operation in the manufacture of cement.

Preventative Maintenance Inspections

Preventative maintenance will be conducted on the components of the combustion system of each kiln and each in-line kiln raw mill at least once per year as long as the equipment is in continuous operation. Equipment not in continuous operation will be inspected by 8,760 hours of operation. Results of inspections will be recorded and repair work orders will be issued and completed as necessary. Samples of inspection sheets are included in Attachment 4. The inspection sheets may be modified periodically to meet the future needs of the facility and are therefore subject to change. APCC's Indirect Coal Firing System "Safety and Maintenance Procedure Information" manual for Kiln 4 is included in Attachment 5. The following chart is a current list of kiln combustion components to which this section is applicable. This chart will be revised automatically upon approval of future equipment changes or additions.

List of Kiln Combustion Components

Name	Description
H3-K1-BA1	Bin Activator
H3-K1-BS1	Beltscale
H3-K1-CB	Combination Burner
H3-K1-CM (493)	Coal Mill - Includes Coal Mill Fan
H3-K1-CM-CC	Hot Air Duct Cyclone
H3-K1-CM-RF	Coal Mill Rotary Feeder
H3-K2-BA1	Bin Activator
H3-K2-CB	Comb. Burner
H3-K2-CM (493)	Coal Mill - Includes Coal Mill Fan
H3-K2-CM-CC	Hot Air Duct Cyclone
H3-K2-CM-RF	Coal Mill Rotary Feeder
H3-K3-BA1	Bin Activator
H3-K3-BS1	Beltscale
H3-K3-CB	Combination Burner
H3-K3-CM	Coal Mill - Includes Coal Mill Fan
H3-K3-CM-CC	Hot Air Duct Cyclone
H3-K3-CM-RF	Coal Mill Rotary Feeder
H3-K4-BL2	1100 SCFM Blower
H3-K4-BL3	Primary Air Blower Spencer Blower
H3-K4-BL3A & 3B	Auxiliary Primary Air Blowers
H3-K4-BL4	1600 SCFM Blower
H3-K4-CB	Combination Burner
H3-K4-CM-CC	Cyclone Collector
H3-K4-CM-DO	Coal Mill Damper Operator
H3-K4-WF1	Pfister Rotary Scale
H3-K4-WF2	Pfister Rotary Scale
H4 Coal Hoses	H4 Tower coal hoses from coal line to tower coal burners - located on H4 tower
H4 Coal Line	H4 Coal line from tower Pfister to tower
H4 Coal Wiffle Splitter	H4 Coal Splitter - located on tower
H4 Tower Gas Control Valve	H4 Tower Gas Control Valve - located on K4 burner floor
H4 Tower Gas Hose	H4 gas hose between H4 gas line and H4 gas burner
H4 Tower Gas Line	Gas line from burner floor to tower
H4 Tower Gas Maxxon	H4 Tower gas Maxxon valve - located on K4 burner floor
H4 Tower oil line	Oil Line from oil pump to tower
H4-PBC1	Tower Coal Burner #1

Name	Description
H4-PBC2	Tower Coal Burner #2
H4-PBG1	Tower Gas Burner #1
H4-POB1	Tower Oil Burner #1
H4-POB2	Tower Oil Burner #2
K1 Coal Line	K1 coal line from H3-K1-CM to Coal Burner
K1 Gas Burner Pipe	Kiln 1 gas burner pipe
K1 Gas Control Valve	Kiln 1 gas Control Valve - located on old kiln burner floor
K1 Gas Hose	Kiln 1 gas hose between Kiln 1 gas line and Kiln 1 gas burner
K1 Gas Line	Kiln 1 Gas line on old kiln burner floor
K1 Gas Maxxon	Kiln 1 gas Maxxon Valve - located on old kiln burner floor
K2 Coal Line	K1 coal line from H3-K1-CM to Coal Burner
K2 Gas Burner Pipe	Kiln 2 gas burner pipe
K2 Gas Control Valve	Kiln 2 gas Control Valve - located on old kiln burner floor
K2 Gas Hose	Kiln 2 gas hose between Kiln 2 gas line and Kiln 2 gas burner
K2 Gas Line	Kiln 2 Gas line on old kiln burner floor
K2 Gas Maxxon	Kiln 2 gas Maxxon Valve - located on old kiln burner floor
K3 Coal Line	K1 coal line from H3-K1-CM to Coal Burner
K3 Gas Burner Pipe	Kiln 3 gas burner pipe
K3 Gas Control Valve	Kiln 3 gas Control Valve - located on old kiln burner floor
K3 Gas Hose	Kiln 3 gas hose between Kiln 3 gas line and Kiln 3 gas burner
K3 Gas Line	Kiln 3 Gas line on old kiln burner floor
K3 Gas Maxxon	Kiln 3 gas Maxxon Valve - located on old kiln burner floor
K4 Coal Hose	Kiln 4 coal hose from Kiln 4 coal line to combination burner - located on K4 burner floor
K4 Coal Line	Kiln 4 coal line from Pfister scale to burner floor
K4 Gas Control Valve	Kiln 4 Gas Control Valve - located on K4 burner floor
K4 Gas Hose	Kiln 4 gas hose between gas line and combination burner - on K4 burner floor
K4 Gas Line	K4 gas line on K4 burner floor
K4 Gas Maxxon	Kiln 4 gas Maxxon valve - located on K4 burner floor
K4 Primary Air Hose	Kiln 4 primary air hose from Primary air line to combination burner - located on K4 burner floor
K4 Primary Air Line	Kiln 4 primary air line from H3-K4-BL3 to burner floor
R4-PO1	Used oil pump for H4 tower
H3-K4-SCF1	Solid Fuel Hopper Screw Feeder
H3-K4-BE1	Solid Fuel Elevator
H3-K4-BE1 - Disch chute and dump valve	Solid Fuel Elevator discharge chute and dump valve
H3-K4-BC1	Belt Conveyor from solid fuel hopper to elevator

All records, including inspection sheets and repair work orders, will be retained for a period of five (5) years.

Repair Work Orders

When problems occur or are observed during operation, a repair work order is written, as deemed necessary, by qualified personnel. The work order is determined to fit one of three priority categories: Emergency, Urgent or Routine. Emergency work orders are handled as soon as is feasible by on-hand maintenance personnel, there are both mechanical and electrical maintenance personnel on hand 24 hours per day. Urgent work orders are addressed usually within 48 hours and Routine work orders are addressed as soon as is reasonable depending upon the production and maintenance schedules at the time.

Determination of the priority of the problem is based on safety hazards to plant personnel, potential compliance considerations, damage to equipment and production requirements. Any problems that result in immediate safety or compliance considerations are treated as an Emergency and addressed as soon as possible. Maintenance personnel are trained to diagnose and repair problems with combustion equipment.

Section 6.0 Opacity Monitoring Procedures

Section 6.0 Opacity Monitoring Procedures

APCC will use the following procedures to periodically monitor affected sources subject to opacity standards under 40 CFR §§ 63.1346 and 63.1348:

(i) Conduct a monthly 1-minute visible emissions test of each affected source in accordance with Method 22 of Appendix A to part 60 of this chapter. The test must be conducted while the affected source is in operation.

(ii) If no visible emissions are observed in six consecutive monthly tests for any affected source, decrease the frequency of testing from monthly to semi-annually for that affected source. If visible emissions are observed during any semi-annual test, resume testing of that affected source on a monthly basis and maintain that schedule until no visible emissions are observed in six consecutive monthly tests.

(iii) If no visible emissions are observed during the semi-annual test for any affected source, decrease the frequency of testing from semi-annually to annually for that affected source. If visible emissions are observed during any annual test, resume testing of that affected source on a monthly basis and maintain that schedule until no visible emission are observed in six consecutive monthly tests.

(iv) If visible emissions are observed during any Method 22 test, conduct a 6-minute test of opacity in accordance with Method 9 of appendix A to part 60 of this chapter. The Method 9 test must begin within one hour of any observation of visible emissions.

APCC will maintain a record of the affected source, date, time and results of each Method 22 or Method 9 observation.

Broken Bag Detectors: If broken bag detectors are used in lieu of the opacity monitoring procedures, they shall be operated, calibrated and maintained according to the recommendations of the manufacturer.

Attachment 1

Sample Inspection Sheets

Sample Inspection Sheet

Attachment 1

ARIZONA PORTLAND CEMENT CO.

Subject to change

MAINTENANCE JOB PLAN

Equipment Location (Dept.) Quarry, Crusher #2 Bldg. , Ground Level	Equipment No. **B2-IC1**	Prepared by	File No. 1b-4
Equipment Description Impact Crusher for System		Approved by	Date Prepared 10/9/98
Description of Work PM Inspection 138-1205			
PM Inspection	Repetitive Job? Yes No	Job Frequency 6 months	

JOB STEP	JOB STEP DESCRIPTION
1	Call Shift Electrician to PULL main disconnects, then Lock Out.
2	After opening crusher with hydraulic system, complete check list.
3	Leave unit in running condition after required work & inspection is completed.

QTY.	MATERIAL REQUIRED	QTY.	SPECIAL TOOLS REQUIRED
	BLO-Bars 216-0175	1	Tool Kit
	MONO-Block 229-0030	1	Flashlight
	2nd. Breaker Liners 227-0035	1	Cleaning Solvent
	2nd. Breaker Liners 200-0040	2	Safety Locks
	1-1/2" Liner bolts 200-9157		
	Rear Impact 2nd. Block 156-0005		

Sample Inspection Sheet

Subject to change

B2-IC INSPECTION REPORT
ARIZONA PORTLAND CEMENT CO. AREA 1B

Repairmen: _____ Date: _____ Cost Center: '138-1205 WO#:

CHECK	INITIAL	CONDITION AND REPAIRS MADE
Gear Reducer (Visual)		
Coupling (Visual)		
Motor Mounts		
Chutes & Liners		
Rotor Bearings		
Hydraulic Cylinders		
BLO-Bars (Date of last C/O)		
Breaker Bars		
Guards		
Shaft Seals		
Chain Curtain		

OTHER INFO:

Date Started: Completed:

M.H.'s Inspection: Repair:

Estimated M.H.'s to Repair:

Foreman's Approval:

Sample Inspection Sheet

Subject to change

ARIZONA PORTLAND CEMENT CO.
MAINTENANCE JOB PLAN

Equipment Location (Dept.)	Equipment No.	Prepared by	File No.
Quarry			1b-12
Equipment Description	B3-BC4-TT	Approved by	Date Prepared
Traveling Tripper			10/14/98

Description of Work
PM Inspection

PM Inspection	Repetitive Job? Yes No	Job Frequency
		2 weeks

JOB STEP	JOB STEP DESCRIPTION
1	Lock Out.
2	Do check list.
3	After PM is completed, leave unit in normal running condition.

QTY.	MATERIAL REQUIRED	QTY.	SPECIAL TOOLS REQUIRED
		1	Lock
		1	Flashlight

Sample Inspection Sheet

Subject to change

B3-BC4-TT INSPECTION REPORT
ARIZONA PORTLAND CEMENT CO. AREA 1B

Repairmen: _____ Date: _____ Cost Center: '138-1205 WO#:

CHECK	INITIAL	CONDITION AND REPAIRS MADE
Tripper Idlers		
Track & Tripper Wheels		
Electric Cable Frame		
Cable Rollers & Framing		
Coupling		
Drive Sprockets & Chain		
Chain Guard		
Frame Condition of Tripper		
Grizzly Bars		
Tripper Stops		

OTHER INFO:

Date Started: Completed:

M.H.'s Inspection: Repair:

Estimated M.H.'s to Repair:

Foreman's Approval:

Sample Inspection Sheet

Subject to change

ARIZONA PORTLAND CEMENT CO.
MAINTENANCE JOB PLAN

Equipment Location (Dept.) South Side of Reclaimer/ Stacker Building	Equipment No. B7-TS	Prepared by agq	File No. 4-1
Equipment Description Rock stacker, belt conveyor		Approved by	Date Prepared 10/16/98
Description of Work PM Inspection			
	Repetitive Job? Yes No	Job Frequency 6 months	

JOB STEP	JOB STEP DESCRIPTION
1	Notify & place Work Tag at Central Control. Lock out M.D.'s required for belt conveyors & drives on stacker.
2	If possible, check drive units with unit running. (Wheels, clutches, etc.)
3	Check frames / braces for cracks or damage.
4	Leave unit in normal running condition after work & inspection are completed.

QTY.	MATERIAL REQUIRED		QTY.	SPECIAL TOOLS REQUIRED
	POWER TRAC Shaft Bearing	100-2885	1	Tool kit
	POWER TRAC Drum	241-0030	1	Flashlight
	Pinion Drive 312 mm	105-0075	4	Safety locks
	Size 70 Module Worm Gear	102-0365		
	FALK Torque Coupling	125-0515		
	FALK Torque Coupling	125-0520		

Sample Inspection Sheet

Subject to change

Traveling Stacker
B7-TS INSPECTION REPORT
ARIZONA PORTLAND CEMENT CO. AREA 4

Repairmen: _____ Date: _____ Cost Center: '138-1206 WO#:

CHECK	INITIAL	CONDITION AND REPAIRS MADE
CARRIAGE:		
Wheels/Bushings		
Wheels for Wear		
Frame/Cracks/Damage		
Ladders/Steps		
DRIVE UNITS:		
Drive Motor		
Clutch/Guards		
Travel Gearboxes		
Torque Clutches		
POWER TRAC:		
Both SETS of Wheels		
Wheel Bearings		
Cable Frames		
T' Brackets		
Boom Belt Cable/ Pivots		
Main Wheels/Bushings		

OTHER INFO:

Date Started: Completed:

M.H.'s Inspection: Repair:

Estimated M.H.'s to Repair:

Foreman's Approval:

Sample Inspection Sheet

Subject to change

ARIZONA PORTLAND CEMENT CO.
MAINTENANCE JOB PLAN

Equipment Location (Dept.) South Side of Building along B7-BC1	Equipment No. **B7-TS-PWT**	Prepared by agq	File No. 4
Equipment Description Power Track System to Supply Power to the Stacker		Approved by	Date Prepared Mar. 15, 02
Description of Work PM Inspection			
	Repetitive Job? Yes No	Job Frequency 6 months	

JOB STEP	JOB STEP DESCRIPTION
1	Place work tag at Central Control Room, if it applies. Lock out drive motor. Of B7-TS
2	Where repairs need to be made, tie ribbon to frame.
	Inspect Pulleys and Drums for cracks. Check bearings in the drums.
3	Inspect power track trough to make sure plates are interlocking properly.
4	After inspection and work required, be sure to leave belt conveyor in running condition, unless advised by Supervisor.
5	
6	

QTY.	MATERIAL REQUIRED	QTY.	SPECIAL TOOLS REQUIRED
		1	Tool kit
		1	Flashlight
		1	Cleaning solvent
		1	Identification tape
		4	Safety locks

Sample Inspection Sheet

Subject to change

Power Track
B7-TS-PWT_ INSPECTION REPORT
ARIZONA PORTLAND CEMENT CO. AREA 4

.epairmen: _____ Date: _____ Cost Center: '138-1206 WO#:

CHECK	INITIAL	CONDITION AND REPAIRS MADE
LARGE DRUM (general condition)		
SMALL DRUM (general condition) GREASE DURING INSP.		
CARRIAGE ROLLERS		
TUBING SUPPORT (general condition)		
POWER TRACK SEGEMENTS (loose bolts etc)		
TENSIONING CABLES		
POWER CABLE		
OTHER:		

OTHER INFO: _____

Date Started: Completed:

M.H.'s Inspection: Repair:

Estimated M.H.'s to Repair:

Foreman's Approval:

Sample Inspection Sheet

Subject to change

ARIZONA PORTLAND CEMENT CO.
MAINTENANCE JOB PLAN

Equipment Location (Dept.) East Reclaimer Elevator	Equipment No. **C2-BE4 (E)**	Prepared by agq	File No. 6-5
Equipment Description MIAG Reclaimer Bucket Elevator		Approved by	Date Prepared 11/13/98
Description of Work PM Inspection			
	Repetitive Job? Yes No	Job Frequency 6 months	

JOB STEP	JOB STEP DESCRIPTION
1	Place work tag at Central Control Room. Lock out drive motor at motor disconnect. Unit can be run on TEST.
2	Complete the check list. Complete ONLY minor repairs, as time allows. List ANY major repairs needed on other side of report.
3	Check Drive Units: a. Drive chain, both sprockets, guards, alignment. b. Check motor to Gearbox couplers. c. Drive unit base plate, mount bolts, braces, etc. d. Remove inspection plate on gearbox, inspect gears. e. Inspect head traction bearings, shaft & hub segments.
4	After inspection, be sure to leave elevator in running condition unless advised by Supervisor. Notify Central Control when inspection is completed & RESET ALL trip cords.

QTY.	MATERIAL REQUIRED	QTY.	SPECIAL TOOLS REQUIRED
	Bottom Bearing 100-2340	1	Tool Kit
	Hydraulic Fluid Coupling 107-0140	1	Flashlight
	Flex Half Coupling, 1015G10 Falk 107-0235	1	Cleaning Solvent
	Octagon Drive Sprocket Segments 109-0655	1	Spray Paint
	Seal, C/R#17285 or National #4710504 116-0900	2	Safety Locks
	Elevator Bucket 209-0015		

Sample Inspection Sheet

Subject to change

C2-BE4 (E) INSPECTION REPORT
ARIZONA PORTLAND CEMENT CO. AREA 6

Repairmen: _____ Date: _____ Cost Center: '138-1310 WO#:

CHECK	INITIAL	CONDITION AND REPAIRS MADE
Boot Traction		
Boot Traction Bearings		
Head Traction/ Segments & Hub		
Head Traction Bearings		
Bottom Liners & Top Cover		
Elevator Chain/ Keeper Pins		
Elevator Buckets/ 'L' Supports		
Discharge Chute		
Motor Mounts		
Tension on Chain		
Gear Reducer		
Drive Coupler		
Guards		
Lube System		
Main Rails for Chain		

OTHER INFO:

Date Started: Completed:

M.H.'s Inspection: Repair:

Estimated M.H.'s to Repair:

Foreman's Approval:

Sample Inspection Sheet ARIZONA PORTLAND CEMENT CO.

Subject to change MAINTENANCE JOB PLAN

Equipment Location (Dept.)	Equipment No.	Prepared by	File No.
C2-Area, west BOOM Drag Rake		agq	6-2
Equipment Description	**C2-DR1**	Approved by	Date Prepared
MIAG Reclaimer Drag Rake			11/13/98

Description of Work
PM Inspection

	Repetitive Job?	Job Frequency
	Yes No	6 months

JOB STEP	JOB STEP DESCRIPTION
1	Place work tag at Central Control Room, IF IT applies. Lock out drive motor at motor disconnect. Unit can be run on TEST.
2	Complete the check list. Complete ONLY minor repairs, as time allows. List ANY major repairs needed on other side of report.
3	Leave unit in running condition after required work & inspection is completed. Unless repairs are required as emergency! Notify the Mill Foreman!
4	Notify Central Control when inspection is completed & reset ALL trip cords.

QTY.	MATERIAL REQUIRED	QTY.	SPECIAL TOOLS REQUIRED
		1	Tool Kit
		1	Flashlight
		1	Cleaning Solvent
		2	Safety Locks

Sample Inspection Sheet C2-DR1 INSPECTION REPORT

Subject to change ARIZONA PORTLAND CEMENT CO. AREA 6

Repairmen: _____ Date: _____ Cost Center: '138-1310 WO#:

CHECK	INITIAL	CONDITION AND REPAIRS MADE
Guard Condition		
Grease Lines		
Cable & Pivot Yoke		
Chain & Chain Pins/ Cotter Pins		
Loose Bolts on Drag & 'L' Support		
Cracks on Frame		
Tail Traction & Traction Guide		
Bearings		
Tension on Chain		
Drive: Motor, Coupler & Gearbox		
Head Traction		
Main Rails for Chain		

OTHER INFO:

Date Started: Completed:

M.H.'s Inspection: Repair:

Estimated M.H.'s to Repair:

Foreman's Approval:

Sample Inspection Sheet

Subject to change

ARIZONA PORTLAND CEMENT CO.
MAINTENANCE JOB PLAN

Equipment Location (Dept.) C2-Area, west BOOM Drag Rake	Equipment No. **C2-DR1**	Prepared by agq	File No. 6-2
Equipment Description MIAG Reclaimer Drag Rake		Approved by	Date Prepared 11/13/98
Description of Work PM Inspection			
	Repetitive Job? Yes No	Job Frequency 6 months	

JOB STEP	JOB STEP DESCRIPTION
1	Place work tag at Central Control Room, IF IT applies. Lock out drive motor at motor disconnect. Unit can be run on TEST.
2	Complete the check list. Complete ONLY minor repairs, as time allows. List ANY major repairs needed on other side of report.
3	Leave unit in running condition after required work & inspection is completed. Unless repairs are required as emergency! Notify the Mill Foreman!
4	Notify Central Control when inspection is completed & reset ALL trip cords.

QTY.	MATERIAL REQUIRED	QTY.	SPECIAL TOOLS REQUIRED
		1	Tool Kit
		1	Flashlight
		1	Cleaning Solvent
		2	Safety Locks

Sample Inspection Sheet

Subject to change

C2-DR1 INSPECTION REPORT
ARIZONA PORTLAND CEMENT CO. AREA 6

Repairmen: _____ Date: _____ Cost Center: '138-1310 WO#:

CHECK	INITIAL	CONDITION AND REPAIRS MADE
Guard Condition		
Grease Lines		
Cable & Pivot Yoke		
Chain & Chain Pins/ Cotter Pins		
Loose Bolts on Drag & 'L' Support		
Cracks on Frame		
Tail Traction & Traction Guide		
Bearings		
Tension on Chain		
Drive: Motor, Coupler & Gearbox		
Head Traction		
Main Rails for Chain		

OTHER INFO:

Date Started: Completed:

M.H.'s Inspection: Repair:

Estimated M.H.'s to Repair:

Foreman's Approval:

Sample Inspection Sheet

Subject to change

ARIZONA PORTLAND CEMENT CO.
MAINTENANCE JOB PLAN

Equipment Location (Dept.) C2-Area, north unit in stacker/ reclaimer building	Equipment No. **C2-TR1 (Reclaimer)**	Prepared by agq	File No. 6-1
Equipment Description MIAG Reclaimer		Approved by	Date Prepared 11/13/98
Description of Work PM Inspection			
	Repetitive Job? Yes No	Job Frequency 6 months	

JOB STEP	JOB STEP DESCRIPTION
1	Place work tag at Central Control Room, IF IT applies. Lock out drive motor at motor disconnect. Unit can be run in TEST.
2	Complete the check list. Complete ONLY minor repairs, as time allows. List ANY major repairs needed on other side of report.
3	Leave unit in running condition after required work & inspection is completed. Unless major repairs are required as Emergency! Notify Mill Foreman!
4	Notify Central Control when Inspection is completed & reset ALL trip cords.

QTY.	MATERIAL REQUIRED	QTY.	SPECIAL TOOLS REQUIRED
		1	Tool Kit
		1	Flashlight
		1	Cleaning solvent
		2	Safety Locks

Sample Inspection Sheet

C2-TR1 INSPECTION REPORT

Subject to change ARIZONA PORTLAND CEMENT CO. AREA 6

Repairmen: _____ Date: _____ Cost Center: '138-1310 WO#:

CHECK	INITIAL	CONDITION AND REPAIRS MADE
Guard Condition		
Wheels & Track for Wear		
Wheel Guides		
Drive Sprocket & Bearings		
Motor Mount: Loose Bolts		
Drive Clutch & Mounts		
Oil Level in Gear Box		
Chutes for Wear		
Cables-visual check		
Power Track Keepers		
Structure for Weld Cracks		
Ladders & Handrails		
Condition of Area		

OTHER INFO:

Date Started: Completed:

M.H.'s Inspection: Repair:

Estimated M.H.'s to Repair:

Foreman's Approval:

Sample Inspection Sheet

Subject to change

ARIZONA PORTLAND CEMENT CO.
MAINTENANCE JOB PLAN

Equipment Location (Dept.) stacker/ reclaimer building East wall Power Track	Equipment No.	Prepared by agq	File No. 6
Equipment Description Power Track for Reclaimer	**C2-PWT** **Reclaimer Power Track**	Approved by	Date Prepared 15 March 2002
Description of Work PM Inspection			
	Repetitive Job? Yes No	Job Frequency 6 months	

JOB STEP	JOB STEP DESCRIPTION
1	Place work tag at Central Control Room, IF IT applies. Lock out C2-TR1 drive motor at motor disconnect. Unit can be run in TEST
2	Flag equipment where repairs are needed. Also note location on PM sheet..
3	Complete the check list. Complete ONLY minor repairs, as time allows. List ANY major repairs needed on other side of report.
4	Leave unit in running condition after required work & inspection is completed. Unless major repairs are required as Emergency! Notify Mill Foreman! Notify Central Control when Inspection is completed & reset ALL trip cords.

QTY.	MATERIAL REQUIRED	QTY.	SPECIAL TOOLS REQUIRED
		1	Tool Kit
		1	Flashlight
		1	Cleaning solvent
		2	Safety Locks

Sample Inspection Sheet

Subject to change

Power Track System for Reclaimer
C2-PWT INSPECTION REPORT
ARIZONA PORTLAND CEMENT CO. AREA 6

.epairmen: _____ Date: _____ Cost Center: '138-1310 WO#:

CHECK	INITIAL	CONDITION AND REPAIRS MADE
LARGE DRUM (general condition)		
SMALL DRUM (general condition) GREASE DURING INSP.		
CARRIAGE ROLLERS		
TUBING SUPPORT (general condition)		
POWER TRACK SEGEMENTS (loose bolts etc)		
TENSIONING CABLES		
POWER CABLE		
OTHER:		

OTHER INFO: _____

Date Started: Completed:

M.H.'s Inspection: Repair:

Estimated M.H.'s to Repair:

Foreman's Approval:

Sample Inspection Sheet

Subject to change

ARIZONA PORTLAND CEMENT CO.
MAINTENANCE JOB PLAN

Equipment Location (Dept.) Bottom of Tunnel for C2-BC8	Equipment No. **C2-VF1**	Prepared by agq	File No. 6-18
Equipment Description ERIEZ Magnetic Feeder		Approved by	Date Prepared 11/16/98
Description of Work PM Inspection			
	Repetitive Job? Yes No	Job Frequency 6 months	

JOB STEP	JOB STEP DESCRIPTION
1	Place work tag & notify Central Control. A warning light device MUST be used if repairs to the inside of feeder are necessary. Place light on TOP of storage bin, after notifying crane operator on shift.
2	To TEST equipment for vibration, Main Control Panel is in Central Control. Or call Shift Electrician to place unit in TEST.
3	Leave unit in normal running condition after PM inspection & work are complete.

QTY.	MATERIAL REQUIRED	QTY.	SPECIAL TOOLS REQUIRED
		1	Tool Kit
		1	Flashlight
		1	Safety Lock

Sample Inspection Sheet C2-VF1 INSPECTION REPORT

Subject to change ARIZONA PORTLAND CEMENT CO. AREA 6

Repairmen: _____ Date: _____ Cost Center: '138-1310 WO#:

CHECK	INITIAL	CONDITION AND REPAIRS MADE
Hanger Cables		
Eye Bolts, Shackles, etc.		
Tray Liners		
Check for Loose Bolts		
Test Vibration		

OTHER INFO: _____

Date Started: Completed:

M.H.'s Inspection: Repair:

Estimated M.H.'s to Repair:

Foreman's Approval:

Sample Inspection Sheet

Subject to change

ARIZONA PORTLAND CEMENT CO.
MAINTENANCE JOB PLAN

Equipment Location (Dept.) Ground floor, finish end, old mill room	Equipment No. **CM1-Mill Drive**	Prepared by agq	File No. 19b1-2a
Equipment Description Mill Pinion Shaft, Journals & Lube System		Approved by	Date Prepared 3/15/02
Description of Work PM Inspection			
	Repetitive Job? Yes No	Job Frequency	

JOB STEP	JOB STEP DESCRIPTION
1.	Have electrician disconnect main fuses & lock out mill motor.
2.	PINION ASSEMBLY—Pull coupling bolts, check shaft for level & alignment to the mill motor. Pull bearing caps on all bearings. Check for damage, condition of oil rings, condition of seals, gauge clearance/shaft to bearing surface.
3.	THRUST COLLARS—Measure the machined part only. New ring is 15/16".
4.	PINION STRIKE—Pull felt seal on side of main guard. Wash area where gears mesh. (See attached sheet).
5.	WATER LINES—Check for leaks, condition of all piping, water flow going through check valves.
6.	JOURNALS—Check surfaces for grooves! Log any grooves. If a large groove is found, the top housing should be removed & journal surface measured.
7.	LUBRICATORS—Check lines & fill with lubrication.
8.	LUBE GEAR IN THE BASEMENT—Pull inspection plate & inspect gears, shaft & flange bearings. Add girth gear lube if required.
9.	COUPLING HALVES—If it is necessary to pull jack—shaft, both halves of coupling must be washed & repacked with lubrication after completion.

QTY.	MATERIAL REQUIRED	QTY.	SPECIAL TOOLS REQUIRED
			Set of 'feeler' gauges
		1	Tool kit
		1	Drop cord light
			Standard step ladder (Mill basement)
		4	Safety locks

Sample Inspection Sheet CM1-Drive INSPECTION REPORT

Subject to change ARIZONA PORTLAND CEMENT CO. AREA 19B

Repairmen: _____ Date:_____ Cost Center: '138-1531 WO#:

REMOVE UNIT FOR CLEANING

CHECK	INITIAL	CONDITION AND REPAIRS MADE
PINION SSEMBLY: Shaft Bearings, Gauge Clearance		
Oil Rings		
Both Lubricators & Liners		
Thickness of Both Thrust Collars		
Condition of Journals		
Water Lines, Both Ways		
Girth Gear Lube **(in basement)**		
Thrust Plates: Pull 'Jack' Shaft (if it applies)		
Both Shaft Couplings (grease)		
Pinion Bearing Housings: Oil Cavity/Oil Caps Seals, Gaskets, Bolts		
Pinion Strike/Girth Gear		

OTHER INFO: _____

Date Started: Completed:

M.H.'s Inspection: Repair:

Estimated M.H.'s to Repair:

Foreman's Approval:

Sample Inspection Sheet

Subject to change

ARIZONA PORTLAND CEMENT CO.
MAINTENANCE JOB PLAN

Equipment Location (Dept.) Top floor, East wall of D2 Mill Building.	Equipment No. **D2-1-BE3**	Prepared by	File No. 7-25
Equipment Description Bucket Elevator		Approved by	Date Prepared 3/15/02
Description of Work PM Inspection			
	Repetitive Job? Yes No	Job Frequency 3000 hrs	

JOB STEP	JOB STEP DESCRIPTION
1	Place work tag at Central Control Room. Lock out drive motor at motor disconnect. Unit can be run on TEST.
2	Remove cover half on head traction to inspect buckets, or inspection door. Spray paint starting point. Check for loose or missing bolts/buckets. If excessive work is found, notify Supervisor.
3	Check drive units: a. Drive belts/chain, both sheaves, guards, alignment b. Check motor to gearbox couplers. c. Drive unit base plate, mount bolts, braces, etc. d. Remove inspection plate on gearbox, inspect gears. e. Inspect head traction bearings & shaft. f. Inspect hub segments & bolts.
4	Remove cover on tail traction & inspect.
5	After inspection, be sure to leave elevator in running condition unless advised by Supervisor.

QTY.	MATERIAL REQUIRED	QTY.	SPECIAL TOOLS REQUIRED
		1	Tool Kit
		1	Flashlight
		1	Cleaning Solvent
		1	Spray Paint
		2	Safety Locks

Sample Inspection Sheet D2-1-BE3 INSPECTION REPORT

Subject to change ARIZONA PORTLAND CEMENT CO. AREA 7

Repairmen: _____ Date: _____ Cost Center: '138-1311 WO#:

CHECK	INITIAL	CONDITION AND REPAIRS MADE
Boot Traction/Rails/Stops		
Boot Traction Bearings/Shaft		
Head Traction/Hub/Segments		
Head Traction Bearings (Range is 0.006" to 0.012")		
Elevator Chain		
Elevator Buckets		
Discharge Chute		
Drive/Driven Sprocket		
Drive Chain		
Gear Reducer/Coupling		
Elevator Case		

OTHER INFO:

Date Started: Completed:

M.H.'s Inspection: Repair:

Estimated M.H.'s to Repair:

Foreman's Approval:

BUCKET ELEVATOR INSPECTIONS

Sample Inspection Sheet

Subject to change

Elevator Inspection - every 3,000 hours

Correct and or Note any Deficiencies:

A) SEGMENTAL TRACTION WHEEL(S) AND SPROCKETS
   1) Check for unusual or extensive wear patterns - particularly "divots" where at segment joints.
   2) Check tightness of rim bolts and key.
   3) Check shaft dust seals.
   4) Check head shaft bearing clearances.
   5) Check boot traction shaft bearings for wear.
   6) Check gravity take-up guides and bolts.

B) ELEVATOR CHAIN AND BUCKETS
   1) Check for missing cotters and loose pins.
   2) Check for loose, missing or damaged buckets.
   3) Check chain sidebars for unusual wear or cracks.
   4) Check pin covers for flat spots or wear.
   5) Accurately measure a nominal 10 foot length of chain to determine elongation, record length and check against table below:

Chain Number	No. of Pitches	Unworn Length	1-½% Wear Length
[illegible] S-111	26	123-13/16"	125½"
[illegible]/S856/ER856	20	120"	121-13/16"
X857/ER857	20	120"	121-13/16"
X864/ER864	17	119"	120-3/4"
ER958	20	120"	121-13/16"

   6) If 1-½% elongation is exceeded, chain will be due for change out in near future. Check at least one more segment for confirmation.

C) DISCHARGE CHUTE
   1) Check for obstructions
   2) Inspect and adjust rubber wear lip

D) DRIVE
   1) Check base for looseness or cracks.
   2) Check drive chain and sprockets for wear.
   3) Check chain guard for damage or leaks.

Sample Inspection Sheet

Subject to change ARIZONA PORTLAND CEMENT CO.
MAINTENANCE JOB PLAN

Equipment Location (Dept.) Mill Sweep Dust Collector	Equipment No.	Prepared by agq	File No. 7-
Equipment Description Rotary Feeder	**D2-1-DC1-RF**	Approved by	Date Prepared 3/15/02
Description of Work PM Inspection 138-1534			
	Repetitive Job? Yes No	Job Frequency	

JOB STEP	JOB STEP DESCRIPTION
	NOTE:
1	Call Central Control and have them tag out the unit with all of the names of the personnel working on this piece of equipment. LOCK OUT Equipment at the M. D.
2	Complete the Check lists.
3	Leave Equipment in Normal Running Condition, after Required Work & PM Inspection is Completed, unless Otherwise Advised by Supervisor.

QTY.	MATERIAL REQUIRED	QTY.	SPECIAL TOOLS REQUIRED
		1	Tool Kit
		1	Flash Light
			Wiping Material
		2	Safety Locks

Sample Inspection Sheet D2-1-DC1-RF INSPECTION REPORT

Subject to change ARIZONA PORTLAND CEMENT CO. AREA 7

.epairmen: _____ Date: _____ Cost Center: '138-1534 WO#:

CHECK	INITIAL	CONDITION AND REPAIRS MADE
Feeder, Shaft Seals, Repack if Necessary!		
Drive: Chain & Sprockets		
Chain Guard Condition		
Gearbox		
Pipe Fittings		
Mount Base Condition		
General Condition of Area		
Lube Feeder Bearings		
Blade Condition		

OTHER INFO: _____

Date Started: Completed:

M.H.'s Inspection: Repair:

Estimated M.H.'s to Repair:

Foreman's Approval:

Sample Inspection Sheet

Subject to change

ARIZONA PORTLAND CEMENT CO.
MAINTENANCE JOB PLAN

Equipment Location (Dept.) D2 finish grinding mill top of bldg.	Equipment No. **D2-1-SS**	Prepared by agq	File No. 7
Equipment Description Air separator		Approved by	Date Prepared 3/15/02
Description of Work PM Inspection			
	Repetitive Job? Yes No	Job Frequency	

JOB STEP	JOB STEP DESCRIPTION
1	Notify and place work tag at central control, lock out M.D.
2	Open doors for check.
3	Do check list.
4	Note:
5	Leave separator open and notify Foreman so inside bearing can be grease by Oilers.
6	Leave in normal running condition after required work and PM is completed.

QTY.	MATERIAL REQUIRED	QTY.	SPECIAL TOOLS REQUIRED
		1	Tool kit
		1	Drop light
		2	Safety locks
		1	Air hose & lance

Sample Inspection Sheet D2-1-SS INSPECTION REPORT

ARIZONA PORTLAND CEMENT CO. AREA 7

Subject to change

Repairmen: _____ Date: _____ Cost Center: '138-1534 WO#:

CHECK	INITIAL	CONDITION AND REPAIRS MADE
Door: cover, top		
Fan blades & arms		
Outside casing		
Upper distribution plate		
Lower distribution plate		
Centering bolts		
Air vanes		
Access door		

OTHER INFO: _____

Date Started: Completed:

M.H.'s Inspection: Repair:

Estimated M.H.'s to Repair:

Foreman's Approval:

Sample Inspection Sheet

Subject to change

ARIZONA PORTLAND CEMENT CO.
MAINTENANCE JOB PLAN

Equipment Location (Dept.) Under D2-1-SS (separator)	Equipment No.	Prepared by agq	File No. 7
Equipment Description Tipping Valves	**D2-1-SS-VT**	Approved by	Date Prepared 3/15/02
Description of Work PM Inspection	138-1534		
	Repetitive Job? Yes No	Job Frequency	

JOB STEP	JOB STEP DESCRIPTION
1	Call central control and let them know the names of the individuals working on the unit. Lock out associated equipment and the unit you are working on if possible.
2	Check oil level in gear box.
3	Check arms for wear.
4	Check damper plates inside box covers.
5	Check electric connection.
6	Leave in running condition after PM is completed.
7	
8	

QTY.	MATERIAL REQUIRED	QTY.	SPECIAL TOOLS REQUIRED
		1	Tool Kit
		1	' In-Sert' Grease gun
		1	Flash Light

Sample Inspection Sheet

Subject to change

D2-1-SS-VT INSPECTION REPORT
ARIZONA PORTLAND CEMENT CO. AREA 7

Repairmen: _____ Date: _____ Cost Center: '138-1534 WO#:

CHECK	INITIAL	CONDITION AND REPAIRS MADE
Oil level in Gear Box if applicable		
Arms for Wear		
Motor mount bolts for Tightness		
Damper plates for wear		
Electric Connection		
----If Applicable-----		
Drive Sprocket		
Driven Sprocket		
Drive Chain		
Damper Bearings		

OTHER INFO: _____

Date Started: Completed:

M.H.'s Inspection: Repair:

Estimated M.H.'s to Repair:

Foreman's Approval:

Sample Inspection Sheet

Subject to change

ARIZONA PORTLAND CEMENT CO.
MAINTENANCE JOB PLAN

Equipment Location (Dept.) D2 Finish Mill Fuller Compressor	Equipment No. **D2-FC2**	Prepared by agq	File No. 7
Equipment Description Fuller Compressor		Approved by	Date Prepared 3/15/02
Description of Work PM Inspection 138-1412			
	Repetitive Job? Yes No	Job Frequency	

JOB STEP	
	NOTE: First LOCK OUT EQUIPMENT
1	Periodic inspection of the interior of machine is recommended. This is easily done by removing the rear cylinder head so the blades are accessible. Do not disturb the bearing to remove the head. The outer bearing race will slip off the inner race with the head. Remove the cylinder stud nuts and use the Allen backing off screws in the head to pull the head off the dowel pins
2	Remove the blades by lifting them in the rotor slots & pulling them out the open end. Clean & inspect the Blades carefully. When replacing the original or new blades, they should be tried in the slots to be sure They work freely & then well oiled before installing. If necessary the slots should be cleaned by pulling out the dirt with a scraper.
3	When replacing the head, the original expansion clearance, as shown on the nameplate, must be maintained between the head face and end of the rotor.
4	The clearance at "G" is a predetermined & very important figure as per stamping on CLEARANCE DATA PLATE. First use thickness gauge & straight edge & determine between end of rotor & end face of cylinder. Ordinarily the rotor will not extend out to the end of the cylinder. Subtract this figure from the total clearance Requires at "G", and the remainder will be the total thickness of gaskets necessary at point "E". Allow .002" per gasket for clearance.
5	Install the necessary gasket at "E" & place a lead wire of slightly greater thickness than the clearance desired At point "G". This is for measuring gauge.
6	After reassembling is complete, turn Water back on and check for leaks!
7	Leave in normal running condition after PM is complete.

QTY.	MATERIAL REQUIRED	QTY.	SPECIAL TOOLS REQUIRED
		1	Tool Kit Wiping Material
		1	Feeler Gauges Lead Wire
		1	Scraper

Sample Inspection Sheet

Subject to change

D2-FC2 INSPECTION REPORT
ARIZONA PORTLAND CEMENT CO. AREA 7
-See Front Page for Stock Numbers-

Repairmen: _____ Date:_____ Cost Center: '138-1534 WO#:

CHECK	INITIAL	CONDITION AND REPAIRS MADE
EXPANSION BEARING: (Check for roughness, pitting or irregular marks)		
HUB SEAL RING: (check for Wear or breakage)		
BLADES: (new 0.XXX" thick) Charring, Splitting, Chipping Concave wear in thickness at point Of contact with Rotor Slot wear, Width (if standout is greater than 60% of blade width, check for replacement). Free not binding XXX-XXXX Gasket Set		
ROTOR SLOTS		
DOWEL PINS (straight not off-set)		
CYLINDER BORE (must be smooth true surface)		
CYLINDER JACKETING		
CARBON BUILDUP: (Surfaces Should show a polish with light Film of oil)		
LUBRICATION SYSTEM:		
LINES: Clean		
LUBRICATOR: Clean		
CHECK VALVES		
GUARDS		
FILTER: (Clean and replace Elements)		
Drive Motor and Coupling (Alignment)		
Test run:		
OTHER:		
NOTE: All items should appear Reasonably clean & unworn, if Not, possible further dismantling & part replacement is indicated.		

OTHER INFO: _____

Date Started: Completed:

M.H.'s Inspection: Repair:

Estimated M.H.'s to Repair:

Foreman's Approval:

Sample Inspection Sheet

Subject to change

ARIZONA PORTLAND CEMENT CO.
MAINTENANCE JOB PLAN

Equipment Location (Dept.)	Equipment No.	Prepared by	File No.
D2 Finish Mill		agq	7
Equipment Description	**D2-FC2-LOP**	Approved by	Date Prepared
Ful-Lube Lube Oil Pump			3/15/02
Description of Work			
PM Inspection	138-1534		
	Repetitive Job? Yes No	Job Frequency	

JOB STEP	JOB STEP DESCRIPTION
1	Check with Central Control & lock out at panel located at M. D.
2	Inspect all mount bolts.
3	Inspect lines for leaks.
4	Running Check.
5	Inspect electric connections.

QTY.	MATERIAL REQUIRED	QTY.	SPECIAL TOOLS REQUIRED
		1	Tool Kit
			Wiping Material
		1	Safety Locks

Sample Inspection Sheet D2-FC2-LOP INSPECTION REPORT

Subject to change ARIZONA PORTLAND CEMENT CO. AREA 9b

Repairmen: _____ Date: _____ Cost Center: '138-534 WO#:

CHECK	INITIAL	CONDITION AND REPAIRS MADE
Condition of Guard		
Reservoir Oil Tank		
Oil Level		
Drive Coupling		
Motor (703-0162)		
Only One Pump Should be Engaged		
Mount bolts for tightness		
Running check for vibration		
Condition of electric Connections		
Condition of Area		

OTHER INFO: _____

Date Started: Completed:

M.H.'s Inspection: Repair:

Estimated M.H.'s to Repair:

Foreman's Approval:

Sample Inspection Sheet

Subject to change

ARIZONA PORTLAND CEMENT CO.
MAINTENANCE JOB PLAN

Equipment Location (Dept.) D2 finish grinding mill	Equipment No. **D2-FP1**	Prepared by agq	File No. 7
Equipment Description Fuller kinyon pump 250 MM		Approved by	Date Prepared 3/15/02
Description of Work PM Inspection			
	Repetitive Job? Yes No	Job Frequency 2500 hours	

JOB STEP	JOB STEP DESCRIPTION
1	Notify and place a work tag at Central Control, check with Central Control & lock out at M.D. Also lock out D2-FC1 and
2	D2-FC2
3	Remove and inspect guard.
4	Check coupling tire and bolts for tightness.
5	Remove side plate on bearing housing, lubricate shaft.
6	Disconnect air line to seal, check for cement buildup.
7	Remove side cover on screw assembly box & measure flights of screw visible.
8	Remove flapper valve housing cover.
9	Check pressure gauges.
10	Check orifices in flapper housing for buildup.
	Leave in normal running condition after required work an PM are completed.

QTY.	MATERIAL REQUIRED	QTY.	SPECIAL TOOLS REQUIRED
		1	Tool kit
		1	Grease gun
		1	Flashlight
		2	Safety lock

Sample Inspection Sheet

D2-FP1 INSPECTION REPORT
ARIZONA PORTLAND CEMENT CO. AREA 7

Subject to change

epairmen: _____ Date: _____ Cost Center: '138-1534 WO#:

CHECK	INITIAL	CONDITION AND REPAIRS MADE
Guard for condition		
Coupling: tire, loose bolts		
Flapper arm: flapper & housing wear, screw for wear		
Orifices going to manifold for buildup. Clean out.		
Motor: mount bolts, electric connection		
Air Seal Condition		
Air Supply for Lubricators and Driers for the Air Seal		
Filter/Regulator for Air Seal		
Base for cracks		
Bearings removed and repacked		
Seals replaced		
Screw Condition		

OTHER INFO: _____

Date Started: Completed:

M.H.'s Inspection: Repair:

Estimated M.H.'s to Repair:

Foreman's Approval:

Sample Inspection Sheet

Subject to change

ARIZONA PORTLAND CEMENT CO.
MAINTENANCE JOB PLAN

Equipment Location (Dept.) D2 Raw Grinding	Equipment No. **D2-M**	Prepared by	File No. 7-31
Equipment Description Ball Mill		Approved by	Date Prepared 3/15/02
Description of Work PM Inspection			
	Repetitive Job? Yes No	Job Frequency 2500 hrs	

JOB STEP	JOB STEP DESCRIPTION
	(If Mill needs to be spotted, Mill Foreman must be present.)
1	Place work tag at Central Control Room.
2	Call shift electrician to pull the mains.
3	Lock out the mains.
4	Pull back the feed chute.
5	Do the check list.
6	After Mill Foreman is through with his checks & PM, work required is completed, feed chute can be reinstalled.

QTY.	MATERIAL REQUIRED	QTY.	SPECIAL TOOLS REQUIRED
		1	½" Drive impact & sockets
		1	Light extension
		1	Flashlight
		1	Tool Kit
		1	Come along
		2	Safety Locks

Sample Inspection Sheet

Subject to change

D2-M INSPECTION REPORT
ARIZONA PORTLAND CEMENT CO. AREA 7

Repairmen: _____ Date: _____ Cost Center: '138-1311 WO#:

CHECK	INITIAL	CONDITION AND REPAIRS MADE
Manhole Door Studs		
Journal Bearing Clearance		
Inner Feed End Liner		
Outer Feed End Liner		
Shell Liners, Feed End		
Ball Load		
Shell Liners		
Discharge Screens		
Discharge Wear Plate		
Discharge Cone		
Feed Chute from Feed Bin		
Grease Pinions & Bearings		
Water Lines (Journal)		
Firth Gear Guard		
Journal Lubricator		
Running Check		

OTHER INFO: _____

Date Started: Completed:

M.H.'s Inspection: Repair:

Estimated M.H.'s to Repair:

Foreman's Approval:

Sample Inspection Sheet

Subject to change

ARIZONA PORTLAND CEMENT CO.
MAINTENANCE JOB PLAN

Equipment Location (Dept.) Below roll press, above D3-1-BC2	Equipment No. **D3-1-HRP1**	Prepared by agq	File No. 10-25
Equipment Description Vibrating feeder		Approved by	Date Prepared 3/15/02
Description of Work PM Inspection			
	Repetitive Job? Yes No	Job Frequency 2500 hours	

JOB STEP	JOB STEP DESCRIPTION
1	Place work tag at Central Control Room. Lock out all equipment involved with roll press.
2	Complete check list.
3	Leave unit in running condition after required work & inspection is completed unless instructed by Supervisor.

QTY.	MATERIAL REQUIRED	QTY.	SPECIAL TOOLS REQUIRED

Sample Inspection Sheet

Subject to change

D3-1-HRP1 INSPECTION REPORT
ARIZONA PORTLAND CEMENT CO. AREA 10

Repairmen: _____ Date: _____ Cost Center: '138-1532 WO#:

CHECK	INITIAL	CONDITION AND REPAIRS MADE
Turning roller		
Base frame		
Plates on outside/inside for cracks		
Upper frame assembly		
Rubber boots (4)		
New water assembly		
Guards		
Inspection doors		
Hydraulic doors		
Grease lines		

OTHER INFO: _____

Date Started: Completed:

M.H.'s Inspection: Repair:

Estimated M.H.'s to Repair:

Foreman's Approval:

Sample Inspection Sheet

Subject to change

ARIZONA PORTLAND CEMENT CO.
MAINTENANCE JOB PLAN

Equipment Location (Dept.)	Equipment No.	Prepared by	File No.
D3-1 bldg. west wall		agq	10-26
Equipment Description	**D3-1-HRP1-D**	Approved by	Date Prepared
Hydraulic roll press drive			3/15/02
Description of Work			
PM Inspection			
	Repetitive Job? Yes No	Job Frequency 2500 hours	

JOB STEP	JOB STEP DESCRIPTION
1	Notify and place work tag at Central Control. Lock out all equipment involved with roll press.
2	Complete PM check list.
3	After inspection & required work is completed, leave unit in normal running condition unless otherwise instructed by Supervisor.

QTY.	MATERIAL REQUIRED	QTY.	SPECIAL TOOLS REQUIRED

Sample Inspection Sheet

Subject to change

D3-1-HRP1-D INSPECTION REPORT
ARIZONA PORTLAND CEMENT CO. AREA 10

Repairmen: _____ Date: _____ Cost Center: '138-1532 WO#:

CHECK	INITIAL	CONDITION AND REPAIRS MADE
Motor base frame		
Clutch assembly to motor coupling		
Condition of gearbox		
Pillow block bearings		
Guards		
Clutch to gearbox coupling		
Area general condition		

OTHER INFO: _____

Date Started: Completed:

M.H.'s Inspection: Repair:

Estimated M.H.'s to Repair:

Foreman's Approval:

Sample Inspection Sheet

Subject to change

ARIZONA PORTLAND CEMENT CO.
MAINTENANCE JOB PLAN

Equipment Location (Dept.)	Equipment No.	Prepared by agq	File No. 7B
Equipment Description **AIRSLIDE**	**D4-AS1**	Approved by	Date Prepared 1-1-00

Description of Work
PM Inspection

	Repetitive Job? Yes No	Job Frequency

JOB STEP	JOB STEP DESCRIPTION
	Call Central Control (ext 4234 or 4252) to have them tag the associated blower out with all the names of the individuals working on the airslide Lock out drive motor at the motor disconnect. If there is a test switch, push the button to make sure the blower will not turn. Perform the inspection according to the PM sheet. Unless informed by the Supervisor to leave the Unit down and locked out, leave the Unit in running condition. Put the motor disconnect handle to the energized position and make sure the test switch is set to normal.

QTY.	MATERIAL REQUIRED	QTY.	SPECIAL TOOLS REQUIRED

Sample Inspection Sheet

Subject to change

D4-AS1 INSPECTION REPORT

ARIZONA PORTLAND CEMENT CO.

Area:

Repairmen: _____ Date: _____ Cost Center: '138-1311 WO#:

CHECK	INITIAL	CONDITION AND REPAIRS MADE
Inspect air piping and valves for leaks		
Air chamber for material build up (clean out by opening lower port and operating blower)		
Check canvas for holes.		
Check screen for holes (if applies)		
Check deflection bars (if applies)		
Check material chamber for wear at sides where material flows.		

OTHER INFO: _____

Date Started: Completed:

M.H.'s Inspection: Repair:

Estimated M.H.'s to Repair:

Foreman's Approval:

Sample Inspection Sheet

Subject to change

ARIZONA PORTLAND CEMENT CO.
MAINTENANCE JOB PLAN

Equipment Location (Dept.)	Equipment No.	Prepared by	File No.
Under Belt Scales – Feeds to Roller Mill	**D4-BC1**	agq	7B
Equipment Description		Approved by	Date Prepared
CONVEYOR BELT			
Description of Work			
PM Inspection			

PM Inspection	Repetitive Job? Yes No	Job Frequency 6 months

JOB STEP	JOB STEP DESCRIPTION
1	Lock out drive motor at motor disconnect. Unit can be run on TEST.
2	Roller inspection should be made with belt running. If belt is making contact with rollers & is NOT turning, tie a ribbon to frame. This will identify roller that needs repair. If changes are needed, jot down model number or justification.
3	Description. E.g. width, degree of roller, size of assembly.
4	Inspect drive units: a. Drive belts, sheaves alignment & guards, IF IT applies. b. Drive motor & gearbox; seals, mount bolts, braces, etc.
5	Inspect discharge chute liners. Where it applies, inspect belt covers, take up assembly & hold back units
6	After inspection & work required, be sure to leave belt conveyor in running condition, unless advised by Supervisor.

QTY.	MATERIAL REQUIRED	QTY.	SPECIAL TOOLS REQUIRED
		1	Tool kit
		1	Flashlight
		1	Identification tape
		2	Safety Locks

Sample Inspection Sheet

Subject to change

D4-BC1 INSPECTION REPORT

ARIZONA PORTLAND CEMENT CO.

File#

Repairmen: _____ Date: _____ Cost Center: '138- WO#:

CHECK	INITIAL	CONDITION AND REPAIRS MADE
Tail Pulley & Bearings		
Take up Pulley & Bearings		
Bend Pulleys & Bearings		
Take up Guides		
Snub Pulley & Bearings		
Head Pulley & Bearings		
Gear Reducer/ Drive Belts		
Motor Mounts/ Drive Sheaves		
Chutes & Liners		
Belt, Holes/ Splices		
Skirting		
Pull cords: cord brackets		
Return Rollers/ Troughing Rollers		
Self Centering Rollers		
Guards		
Hold Back Mechanism		
Drive Coupling		
Belt Covers		

OTHER INFO: _____

Date Started: Completed:

M.H.'s Inspection: Repair:

Estimated M.H.'s to Repair:

Foreman's Approval:

Sample Inspection Sheet

Subject to change

ARIZONA PORTLAND CEMENT CO.
MAINTENANCE JOB PLAN

Equipment Location (Dept.)	Equipment No.	Prepared by	File No.
From Hopper to D4-BE1	**D4-BF1**	agq	7B
Equipment Description		Approved by	Date Prepared
CONVEYOR BELT			
Description of Work			
PM Inspection			

PM Inspection	Repetitive Job? Yes No	Job Frequency
		6 months

JOB STEP	JOB STEP DESCRIPTION
1	Lock out drive motor at motor disconnect. Unit can be run on TEST.
2	Roller inspection should be made with belt running. If belt is making contact with rollers & is NOT turning, tie a ribbon to frame. This will identify roller that needs repair. If changes are needed, jot down model number or justification.
3	Description. E.g. width, degree of roller, size of assembly.
4	Inspect drive units: c. Drive belts, sheaves alignment & guards, IF IT applies. d. Drive motor & gearbox; seals, mount bolts, braces, etc.
5	Inspect discharge chute liners. Where it applies, inspect belt covers, take up assembly & hold back units
6	After inspection & work required, be sure to leave belt conveyor in running condition, unless advised by Supervisor.

QTY.	MATERIAL REQUIRED	QTY.	SPECIAL TOOLS REQUIRED
		1	Tool kit
		1	Flashlight
		1	Identification tape
		2	Safety Locks

Sample Inspection Sheet

Subject to change

D4-BF1 INSPECTION REPORT

ARIZONA PORTLAND CEMENT CO.

File#

:pairmen: _____ Date: _____ Cost Center: '138- WO#:

CHECK	INITIAL	CONDITION AND REPAIRS MADE
Tail Pulley & Bearings		
Take up Pulley & Bearings		
Bend Pulleys & Bearings		
Take up Guides		
Snub Pulley & Bearings		
Head Pulley & Bearings		
Gear Reducer/ Coupling		
Motor Mounts		
Chutes & Liners (chill cast)		
Belt, Holes/ Splices		
Skirting		
Pull cords: cord brackets		
Return Rollers/ Troughing Rollers		
Self Centering Rollers		
Guards		
Hold Back Mechanism		
Drive Coupling		
Belt Covers		

OTHER INFO:

Date Started: Completed:

M.H.'s Inspection: Repair:

Estimated M.H.'s to Repair:

Foreman's Approval:

Sample Inspection Sheet

Subject to change

ARIZONA PORTLAND CEMENT CO.
MAINTENANCE JOB PLAN

Equipment Location (Dept.) Bottom of C2-SB7 Mix Rock (West Bin)	Equipment No. **D4-BS1**	Prepared by agq	File No. 7B
Equipment Description **BELT SCALE**		Approved by	Date Prepared
Description of Work PM Inspection			
	Repetitive Job? Yes No	Job Frequency	

JOB STEP	JOB STEP DESCRIPTION
1	Call Central Control (ext 4234 or 4252) to have them tagout the belt scale with all the names of the individuals working on the unit.
2	Perform the inspection according to the PM sheet.
3	Unless informed by the Supervisor to leave the Unit down and Locked out, leave the Unit in running condition. Put the motor disconnect handle to the energized position and make sure the test switch is set to normal..

QTY.	MATERIAL REQUIRED	QTY.	SPECIAL TOOLS REQUIRED

Sample Inspection Sheet

Subject to change

D4-BS1 INSPECTION REPORT

ARIZONA PORTLAND CEMENT CO.

Area:

Repairmen: _____ Date: _____ Cost Center: '138- 1311 WO#:

CHECK	INITIAL	CONDITION AND REPAIRS MADE
Tail Pulley & Bearings		
Take Up Pulley & Bearings		
Take Up Mechanism		
Return Rollers		
Load Rollers		
Alignment Switch Bracket		
Training Idler		
Head Pulley & Bearings		
Gear Reducer		
Motor Mounts		
Drive/Driven Sprockets		
Drive Chain		
Chain Guard		
Chutes & Liners		
Feed Chute/Pins/Slots		
Belt, Holes, Splices/Hi-Wall		
Skirting		
Discharge End Belt Wiper		
Guards & Pull Chords(brackets)		
Running Check (alignment)		

OTHER INFO: _____

Date Started: Completed:

M.H.'s Inspection: Repair:

Estimated M.H.'s to Repair:

Foreman's Approval:

Sample Inspection Sheet

Subject to change

MAINTENANCE JOB PLAN

Equipment Location (Dept.)	Equipment No.	Prepared by agq	File No. 7B
Equipment Description Cyclone Blower	**D4-CC1-BL**	Approved by	Date Prepared 3/15/02
Description of Work PM Inspection			
	Repetitive Job? Yes No	Job Frequency	

JOB STEP	JOB STEP DESCRIPTION
1	Place tag at Central Control Room.
2	Lock out the M.D.
3	Do the check list.
4	Balance check with Electronic Department.
5	Leave in normal running condition after required work & PM is complete.

QTY.	MATERIAL REQUIRED	QTY.	SPECIAL TOOLS REQUIRED
		1	Tool Kit
		1	Vibration Test Machine
		2	Safety Locks

Sample Inspection Sheet

Subject to change

D4-CC1-BL INSPECTION REPORT
ARIZONA PORTLAND CEMENT CO.

epairmen: _____ Date:_____ Cost Center: WO#:

CHECK	INITIAL	CONDITION AND REPAIRS MADE
Motor: Vibration Check		
Motor: Heat Check		
Shaft Bearings: Vibration Check		
Shaft Bearings: Heat Check		
Belts & Sheaves: Tightness Alignment (if applicable).		
Coupling Condition (if applicable).		
Motor Base		
Belt Guard		
Fan Case		
Fan: Buildup Wear		
Balance Check		
Expansion Joints		

OTHER INFO: _____

Date Started: Completed:

M.H.'s Inspection: Repair:

Estimated M.H.'s to Repair:

Foreman's Approval:

Sample Inspection Sheet

Subject to change

ARIZONA PORTLAND CEMENT CO.
MAINTENANCE JOB PLAN

Equipment Location (Dept.)	Equipment No.	Prepared by agq	File No. 7B
Equipment Description Fuller Rotary Feeder	D4-CC1-RF	Approved by	Date Prepared '10-20-99
Description of Work PM Inspection			
	Repetitive Job? Yes No	Job Frequency	

JOB STEP	JOB STEP DESCRIPTION
1.	Notify & place work tag at Central Control.
2.	Lock out equipment at M. D.
3.	Complete check list.
4.	Leave equipment in normal running condition after required work & PM inspection are completed, unless otherwise advised by supervisor.

QTY.	MATERIAL REQUIRED	QTY.	SPECIAL TOOLS REQUIRED
		1	Tool kit
		1	Flashlight
		2	Safety locks
			Standard set of Allen wrenches

Sample Inspection Sheet D4-CC1-RF

Subject to change

INSPECTION REPORT
ARIZONA PORTLAND CEMENT CO.

Repairmen: _____ Date: _____ Cost Center: WO#:

CHECK	INITIAL	CONDITION AND REPAIRS MADE
Feeder, Shaft Seals (Repack if necessary!)		
Drive: Chain & Sprockets		
Chain Guard Condition		
Vari-Drive unit (If it applies!)		
Gearbox		
Pipe Fittings		
Mount Base Condition		
General Condition of Area		
Lube Feeder Bearings		

OTHER INFO: _____

Date Started: Completed:

M.H.'s Inspection: Repair:

Estimated M.H.'s to Repair:

Foreman's Approval:

UST COLLECTOR NAME:

Sample Inspection Sheet

Subject to change

NSPECTED BY (FULL NAMES): D4-DC2

NSPECTION DATE: _____ 19___

PM WORK ORDER NO: _____

REPAIR W.O. NO: _____

INSPECTION ITEMS	COMMENTS
DUST BAGS INSPECT ALL BAGS FROM SIDE OR BOTTOM, LOOK FOR HOLES IN BAGS, HEAVILY BLINDED BAGS, "MUD" ON BAGS, MISSING OR BROKEN BAGS, MISSING OR DAMAGED BAND CLAMPS, ETC... IF TIME PERMITS, CHANGE DAMAGED OR WORN BAGS AS NEEDED.	CONDITION OF BAGS: NUMBER OF BAGS CHANGED _____
WITH FAN RUNNING & DOORS CLOSED, NOTE DIFF. PRESSURE	DIFF. PRESSURE: _____INCHES
BLOW TUBES AND VENTURIS INSPECT BLOW TUBES - LOOK FOR LEAKING DRESSER COUPLINGS (INCLUDING DAMAGED OR WORN SEALS), PROPER ATTACHMENT TO DUST COLLECTOR, DAMAGED OR ELONGATED BLOW TUBE HOLES, ETC... REPLACE ANY DRESSER COUPLING SEALS AS REQUIRED INSPECT VENTURIS - LOOK FOR AIR STREAMING DAMAGE, DENTS, HOLES, ETC... REPAIR OR REPLACE AS REQUIRED, INSPECT DIFFUSER (IF (APPLICABLE)	CONDITION OF BLOW TUBES: CONDITION OF VENTURIS: NOTE ANY WORK DONE:
DOORS & CASING INSPECT DOOR - LOOK FOR DAMAGED OR WORN DOOR SEALS, BROKEN, WORN OR DAMAGED HINGES, CLAMP BOLTS, ETC. REPLACE DOOR SEALS AND REPAIR DOOR(S) AS REQUIRED. NOTE CASING FOR BUCKELLING OR CRACKING AND REPAIR AS NECESSARY.	CONDITION OF DOORS: NOTE ANY WORK DONE:
SOLENOID VALVES REMOVE COVERS AND INSPECT ALL DIAPHRAGMS, REPLACE ANY THAT ARE WORN, CRACKED OR IF PARTS ARE MISSING, IF MORE THAN HALF OF DIAPHRAGMS ARE BAD, REPLACE ALL DIAPHRAGMS	CONDITION OF DIAPHRAGMS: NUMBER REPLACED: _____
MANOMETER (OR GUAGE) INSPECT FOR CRACKED OR DAMAGED MANOMETER TUBES, PLUGGED LINES, REPAIR OR REPLACE MANOMETER, ADD FLUID AS REQUIRED. CLEAN WATER TRAPS, INSPECT GUAGES.	NOTE ANY WORK DONE:
	NOTE ANY WORK DONE:
CLEAN AIR COMPARTMENT REMOVE COVERS AND INSPECT CLEAN AIR COMPARTMENT, LOOK FOR EXCESSIVE DUST, DAMAGED TUBE SHEETS, ETC.. SEAL AND RE-INSTALL DOORS (COVERS)	CONDITION OF DIRTY AIR COMPARTMENT: CHECK IF NOT ACCESSIBLE: _____
DRAFT FAN AND ROTARY FEEDER(S) CHECK CONDITION OF DRIVE BELTS, SHEAVES, FAN HOUSING, FAN WHEEL, SHAFT, BEARINGS, COUPLINGS, GUARDS, FEEDER BLADES, FEEDER HOUSING, ETC...	NOTE ANY PROBLEMS OR REPAIRS:

Sample Inspection Sheet

Subject to change

ARIZONA PORTLAND CEMENT CO.
MAINTENANCE JOB PLAN

Equipment Location (Dept.) D4 Tower –	Equipment No. **D4-DO1**	Prepared by agq	File No. 7B
Equipment Description **Damper Operator**		Approved by	Date Prepared
Description of Work PM Inspection			
	Repetitive Job? Yes No	Job Frequency	

JOB STEP	JOB STEP DESCRIPTION
1	Call Central Control (ext 4234 or 4252) to have them tagout the belt scale with all the names of the individuals working on the unit.
2	Perform the inspection according to the PM sheet.
3	Unless informed by the Supervisor to leave the Unit down and Locked out, leave the Unit in running condition. Put the motor disconnect handle to the energized position and make sure the test switch is set to normal..

QTY.	MATERIAL REQUIRED	QTY.	SPECIAL TOOLS REQUIRED

Sample Inspection Sheet

Subject to change

D4-DO1 INSPECTION REPORT
ARIZONA PORTLAND CEMENT CO.
Area: 7b

Repairmen: _____ Date: _____ Cost Center: '138- 1311 WO#:

CHECK	INITIAL	CONDITION AND REPAIRS MADE
Blade Seals: Inspect the throat seals. Replace torn seals.		
Electro-Mechanical Actuator: If possible test run by closing to 20% then re-opening. Check for smooth operation.		
Check for loose/missing bolts.		
Check Couplings and Set Screws		
Inspect Rack and Pinion: Note gear mesh and wear.		
Check Casing		

OTHER INFO:

Date Started: Completed:

M.H.'s Inspection: Repair:

Estimated M.H.'s to Repair:

Foreman's Approval:

ARIZONA PORTLAND CEMENT CO.
MAINTENANCE JOB PLAN

Equipment Location (Dept.) Top of the D4 Additive Bins	Equipment No. **D4-DR1**	Prepared by agq	File No. 7B
Equipment Description Drag Chain Conveyor		Approved by	Date Prepared 3/15/02
Description of Work PM Inspection			
	Repetitive Job? Yes No	Job Frequency	

JOB STEP	JOB STEP DESCRIPTION
1	Lock out drive motor at motor disconnect. Unit can be run on TEST.
2	Drag Link inspection should be made with drag chain running. Note how much hard facing is left.
3	Check drag chain for wear on the connecting pin and washers which are normally welded to each end of the link.
4	Check return idlers for wear on the idler surface, the condition of the packing gland, and check bearing condition.
5	Check casing and inspection ports.
6	Check drive chain guard.
7	Check side and bottom liners for wear.
8	Check the slide gates for correct operation, check slide gate air connections.
9	Inspect feed and discharge chute liners.
10	Check head section and tail section for wear to the link drive sprocket.
11	Check drive and driven sprockets and chain for alignment and wear.
12	After inspection & work required, be sure to leave belt conveyor in running condition, unless advised by Supervisor.

Sample Inspection Sheet

Subject to change

QT.	MATERIAL REQUIRED	QTY.	SPECIAL TOOLS REQUIRED

Sample Inspection Sheet

Subject to change

D4-DR1 INSPECTION REPORT
ARIZONA PORTLAND CEMENT CO AREA7B

Repairmen: _____ Date: _____ Cost Center: '138-1314 WO#:

CHECK	INITIAL	CONDITION AND REPAIRS MADE
Head Traction: Sprocket Wear Chain Bearings		
Drive Chain and Sprocket		
Driven Sprocket		
Drive Chain Guard		
Gear Reducer: Heat and Vibration, Oil Level		
Tail Traction: Bearings Take-Up Sprocket Wear		
Case Condition/Port Condition		
Drag Chain:		
Idler: Condition Bearings		
Side Liners		
Bottom Liners		
Slide Gate: Air Lines Operation		

OTHER INFO:

Date Started: Completed:

M.H.'s Inspection: Repair:

Estimated M.H.'s to Repair:

Foreman's Approval:

Sample Inspection Sheet ARIZONA PORTLAND CEMENT CO.

Subject to change MAINTENANCE JOB PLAN

Equipment Location (Dept.) Feeds Clinker from Kilns into Crane Storage	Equipment No. **H2-PF1**	Prepared by agq	File No. 9D
Equipment Description **ApronConveyor---Rexnord AFT Conveyor**		Approved by	Date Prepared 3/15/02
Description of Work PM Inspection			
	Repetitive Job? Yes No	Job Frequency	

JOB STEP	JOB STEP DESCRIPTION
	Call Central Control (4252 or 4234) with the names of all personnel who will be working on this piece of equipment. Lock out drive motor at motor disconnect. Unit can be run on TEST. Have Central Control try to start this piece of equipment to be sure you have correctly locked it out. Use spray paint to distinguish starting point. Check for loose or missing bolts/buckets/segments. If excessive work is found notify Supervisor. Check drive units: a. Motor Coupling and Gearbox, alignment b. Check Drive Traction Sprocket for wear/alignment. Check for signs of uneven wear to the chain/sprocket. c. drive unit base plate, mount bolts, braces, etc. d. remove inspection plate on gear box, inspect gears e. inspect head traction bearings, shaft & hub segments f. Inspect Pull cords and hand rails and grating associated with this unit. g. Inspect rails, pan rollers, and chain for wear and looseness. h. Inspect both feed and discharge chutes for wear. i. Measure chain stretch. j. Check Motion detector star wheel for mechanical integrity. Remove cover on tail traction & inspect take-up bearings and cable connections and sheaves. After inspection be sure to leave elevator in running condition unless advised by Supervisor.

QTY.	MATERIAL REQUIRED	QTY.	SPECIAL TOOLS REQUIRED
		1	Tool Kit
		1	Flashlight
		1	Spray Paint
		2	Safety Locks

Sample Inspection Sheet

Subject to change

Rexnord AFT Conveyor **H2-PF1** INSPECTION REPORT
ARIZONA PORTLAND CEMENT CO. AREA 9D

Repairmen: _____ Date: _____ Cost Center: '138-1404 WO#:

CHECK	INITIAL	CONDITION AND REPAIRS MADE
Head Section:		
Motor, coupling, guard, frame		
Gearbox, for leaks, oil level/condition		
Head traction bearings		
Head Sprockets for wear, face cracking, alignment, etc.		
Chute to Magaldi belt. (H2-PF2)		
Pan Section:		
Pan condition, wear, overlap		
Chain links for wear or cracks		
Pan Carrying Rollers		
Rail Condition		
Check Chute from Old Kiln for wear.		
Measure Chain Stretch		
Pull Cords and Eye Bolts. (test pull cord while running)		
Check Guard condition.		
Tail Section		
Smooth Traction condition		
Bearings		
Take-up connections cables and sheaves.		
Tail Bonnet & Chute Condition		

OTHER INFO:

Date Started: Completed:

M.H.'s Inspection: Repair:

Estimated M.H.'s to Repair:

Foreman's Approval:

Sample Inspection Sheet

Subject to change

ARIZONA PORTLAND CEMENT CO.
MAINTENANCE JOB PLAN

Equipment Location (Dept.) Diverter gate from Magaldi Belt to By Pass Elevator	Equipment No. **H2-PF1-DG1**	Prepared by agq	File No. 9D
Equipment Description **Diverter Gate**		Approved by	Date Prepared 3/15/02
Description of Work PM Inspection			
	Repetitive Job? Yes No	Job Frequency	

JOB STEP	JOB STEP DESCRIPTION
	Call Central Control (4252 or 4234) with the names of all personnel who will be working on this piece of equipment. Lock out drive motor at motor disconnect of H2-PF1, H2-PF2, H2-BE1. Lock out all pieces of equipment which may become a saftey hazard when working with this piece of equipment. Shut off air to diverter gate.

QTY.	MATERIAL REQUIRED	QTY.	SPECIAL TOOLS REQUIRED
		1	Tool Kit
		1	Flashlight
		1	Spray Paint
		2	Safety Locks

Sample Inspection Sheet

Subject to change

H2-PF1-DG1 INSPECTION REPORT
ARIZONA PORTLAND CEMENT CO. AREA 9D

Repairmen: _____ Date: _____ Cost Center: '138-1404 WO#:

CHECK	INITIAL	CONDITION AND REPAIRS MADE

OTHER INFO:

Date Started: Completed:

M.H.'s Inspection: Repair:

Estimated M.H.'s to Repair:

Foreman's Approval:

Sample Inspection Sheet

Subject to change

ARIZONA PORTLAND CEMENT CO.
MAINTENANCE JOB PLAN

Equipment Location (Dept.) Feeds Clinker from Kilns into Crane Storage	Equipment No. **H2-PF2**	Prepared by agq	File No. 9D
Equipment Description **Magaldi Conveyor**		Approved by	Date Prepared 3/15/02
Description of Work PM Inspection			
	Repetitive Job? Yes No	Job Frequency	

JOB STEP	JOB STEP DESCRIPTION
1	Call Central Control (4252 or 4234) with the names of all personnel who will be working on this piece of equipment.
2	Lock out drive motor at motor disconnect. Unit can be run on TEST. Have Central Control try to start this piece of equipment to be sure you have correctly locked it out.
3	Use spray paint to distinguish starting point. Check for loose or missing bolts/buckets/segments. If excessive work is found notify Supervisor.
	Check drive units:
	k. Motor Coupling and Gearbox, alignment
	l. Check Drive Traction Sprocket for wear/alignment. Check for signs of uneven wear to the chain/sprocket.
	m. drive unit base plate, mount bolts, braces, etc.
4	n. remove inspection plate on gear box, inspect gears
5	o. inspect head traction bearings, shaft & hub segments
	p. Inspect Pull cords and hand rails and grating associated with this unit.
	Remove cover on tail traction & inspect bushings, sprocket, channel guides.
	After inspection be sure to leave elevator in running condition unless advised by Supervisor.

QTY.	MATERIAL REQUIRED	QTY.	SPECIAL TOOLS REQUIRED
		1	Tool Kit
		1	Flashlight
		1	Spray Paint
		2	Safety Locks

Sample Inspection Sheet

Subject to change

H2-PF2 INSPECTION REPORT
ARIZONA PORTLAND CEMENT CO. AREA 9D

Repairmen: _____ Date: _____ Cost Center: '138-1404 WO#:

CHECK	INITIAL	CONDITION AND REPAIRS MADE
Head Section:		
Motor, coupling, guard, frame		
Gearbox, for leaks, oil level/condition		
Head traction bearings		
Head Pulley for wear, face cracking, etc.		
Door: hanging dust panels		
Magaldi Belt		
Pan condition, wear, overlap		
Chain, Pins, Connectors		
Top Carrying Rollers		
Bottom Return Rollers		
Pull Cords and Eye Bolts. (test pull cord while running)		
Tail Section		
Tail Pulley condition		
Bearings		
Take-up Air Rams		
Air Regulator & Air Filter		
Air hose condition		
Back up Nitrogen tank for pressure, hose condition		
Chutes Feeding Magaldi		
Tail Bonnet Condition		

OTHER INFO:

Date Started: Completed:

M.H.'s Inspection: Repair:

Estimated M.H.'s to Repair:

Foreman's Approval:

Sample Inspection Sheet

Subject to change

ARIZONA PORTLAND CEMENT CO.
MAINTENANCE JOB PLAN

Equipment Location (Dept.) K-3 Hood	Equipment No. **H3-K3-CB**	Prepared by agq	File No. 18-16
Equipment Description Kiln Coal & Gas Pipe Burner		Approved by	Date Prepared 3/15/02
Description of Work PM Inspection			
	Repetitive Job? Yes No	Job Frequency Reline	

JOB STEP	JOB STEP DESCRIPTION
1.	Wait until hood is pulled back before doing inspection.
2.	Any major problems will be noticed upon disassembling hood.
3.	Complete the check list.
4.	All tip repairs should be completed before hood is reassembled.

QTY.	MATERIAL REQUIRED	QTY.	SPECIAL TOOLS REQUIRED

Sample Inspection Sheet

Subject to change

H3-K3-CB

Kiln Gas & Coal Pipes INSPECTION REPORT
ARIZONA PORTLAND CEMENT CO. AREA 18

Repairmen: _____ Date: _____ Cost Center: '138-1403 WO#:

CHECK	INITIAL	CONDITION AND REPAIRS MADE
Coal Pipe Blast Gate-TEST Run		
Seal		
Telescope Section		
Flange Connections		
Mount Bolts		
Crank Assembly & Cable		
Dou-Nuts & Tip		
Gas Pipe Flex Line Condition		
Quick Connection		
Adjustment Assembly		
Gauges		
Mounts		
Pipe Nozzle		

OTHER INFO:

Date Started: Completed:

M.H.'s Inspection: Repair:

Estimated M.H.'s to Repair:

Foreman's Approval:

Sample Inspection Sheet

Subject to change

ARIZONA PORTLAND CEMENT CO.
MAINTENANCE JOB PLAN

Equipment Location (Dept.) Kiln #3—west side	Equipment No. **H3-K3-CM**	Prepared by agq	File No. 18-21
Equipment Description Coal Mill & Blower 2		Approved by	Date Prepared 3/15/02
Description of Work PM Inspection			
	Repetitive Job? Yes No	Job Frequency Reline	

JOB STEP	JOB STEP DESCRIPTION
1.	Lock out.
2.	Remove shell doors & make interior inspection.
3.	Do exterior check list.
4.	Leave in normal running condition after required work & PM inspection are completed.

QTY.	MATERIAL REQUIRED	QTY.	SPECIAL TOOLS REQUIRED
		1	Tool kit
		2	Safety locks
		1	Light

Sample Inspection Sheet

Subject to change

H3-K3-CM

Coal Mill INSPECTION REPORT

ARIZONA PORTLAND CEMENT CO. AREA 18

Repairmen: _____ Date: _____ Cost Center: '138-1403 WO#:

CHECK	INITIAL	CONDITION AND REPAIRS MADE
Victaulic Couplings		
Fan Intake Pipe		
Converter Head & Vane		
Deflector Reg. Assembly		
Separator Top		
Deflector Ring		
Deflector Assembly		
Inner Cone		
Air Seal Assembly		
Journal Assembly		
Scraper & Guard Assembly		
Insulation & Cover Assembly		
Tramp Iron Spout Assembly		
Oil Gauge & Piping Assembly		
Mounting Plates		
Mill Drive & Bowl Assembly		
Foundation		
Worm Shaft Assembly		
Mill Side Liner Assembly		
Upper Mill Side & Separator Liner Arrang.		
Feed Chute		
Motor & Base		
Coupling: Grids & Alignment		
Pedistal Bearing: Oil Level & Condition		
Overall Condition		
Fan Housing		
Fan Blades		
Upper Side Liners		
Spider Assembly		
Foundation—Grout		

		H3-K3-Coal Mill PM Sheet Page 2
Balance Fan		
Misc. Equipment Handrails & Ladder		
Guards		
Condition of Fire Extinguishers in Area		**Sample Inspection Sheet** Subject to change

OTHER INFO:

Date Started: Completed:

M.H.'s Inspection: Repair:

Estimated M.H.'s to Repair:

Foreman's Approval:

Attachment 2

Sample Forms of Vibration Analysis

LARONI INCORPORATED

2025 W. HIGHWAY DR., TUCSON, AZ. 85705
Tel (520) 887-4816 Fax (520) 888-6551

Overall Condition Rating Summary

Arizona Portland Cement

K4 AREA

DATA TAKEN ON 12-21-07

Machines Below Overall Alarms | Machines with problems Detected (In Alarm)

Good to Excelent Operating Condition	Good to Excellent Operating Condition	Trend Problem Only Priority 3	Schedule Repair at Convenience Priority 2	Maintenance Required ASAP Priority 1
H2-PF2 Belt	H5-5 BLOWER H5-5-GB	K4 ID FAN H4-KF1		QUENCHER 2 H2-QC4-BL2
INCLINE DRIVE H2-QC4-DB	PRIMARY AIR 4 H3-K4-BL4			QUENCHER 5 H2-QC4-BL5
REVERSE AIR 2 H5-GB-BL2	QUENCHER 4 H2-QC4-BL4			
QUENCHER 7 H2-QC4-BL7	KILN DRIVE 4 H3-K4-D			
QUENCHER 6 H2-QC4-BL6	COOLER AIR 1 H5-GB-BL1			
COAL MILL H3-K4-CM	PRIMARY AIR 2 H3-K4-BL2			
ID Fan H3-K4-CM-BC1	QUENCHER 1 H2-QC4-BL1			
	PRIMARY AIR 3 H3-K4-BL3			
	QUENCHER 3 H2-QC4-BL3			
	BAGHOUSE H2-GB-BL1			

K4 AREA
FINDINGS
DATA TAKEN ON 12-21-07

Priority 1

Machine: H2-QC4-BL2 Quencher

The readings on both fan bearings have increased to Priority 1 levels. Both of these bearings could possibly be loose on the shaft. Both bearings look like they have been replaced recently.

Machine: H2-QC4-BL5 Quencher

The fan outboard bearing readings have increased a large amount since last survey. I suggest changing out this bearing as soon as possible.

Priority 3

Machine: H4-KF1 ID Fan

The readings on the motor inboard bearing are changing from survey to survey. There still seems to be a trend to a fault in the readings. I will continue to trend for any increase in the readings.

H2-QC4-BL2 Quencher 2

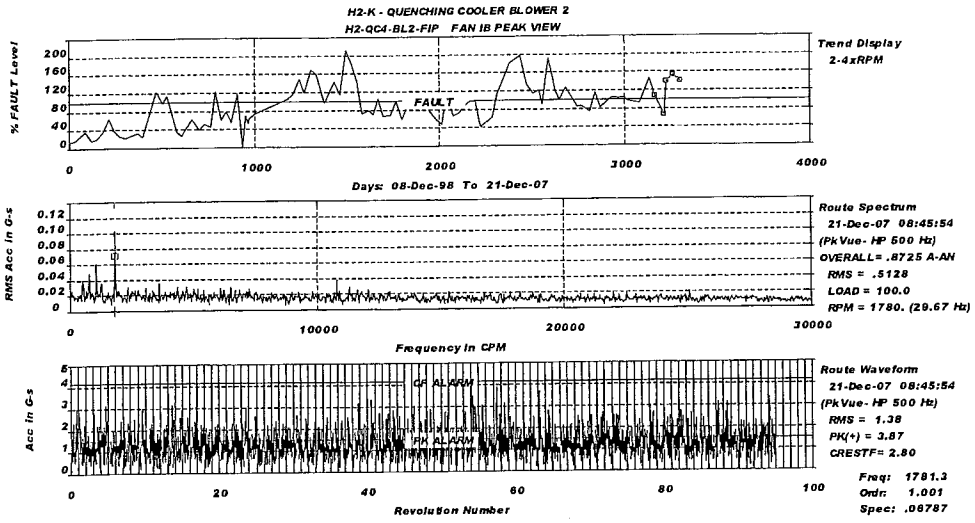

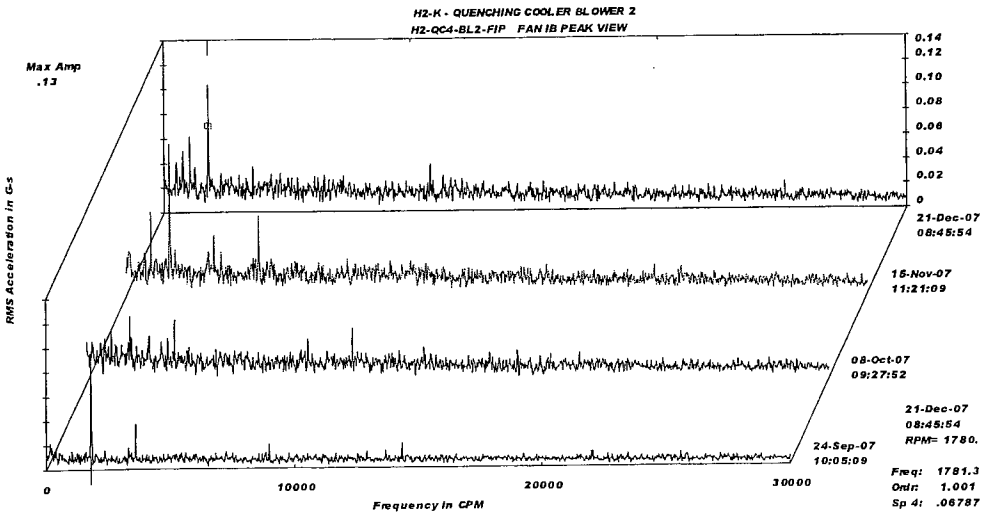

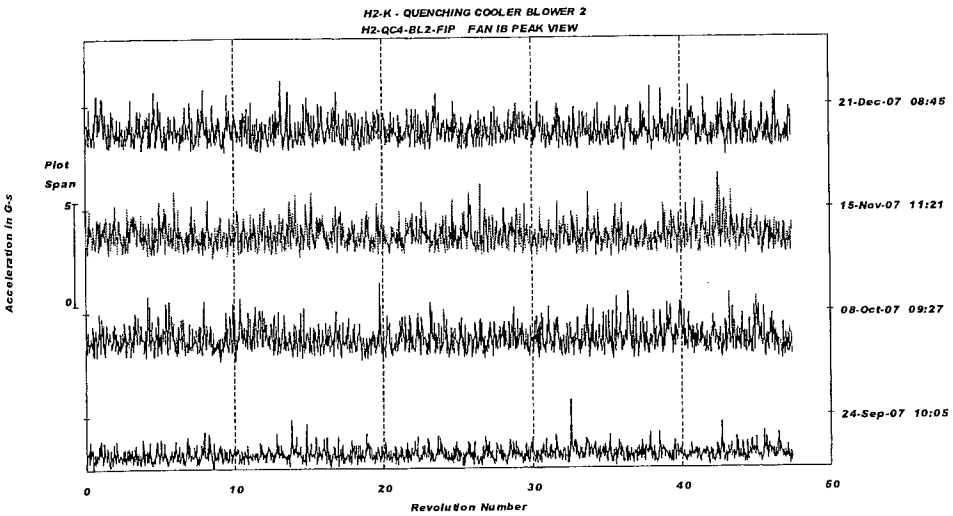

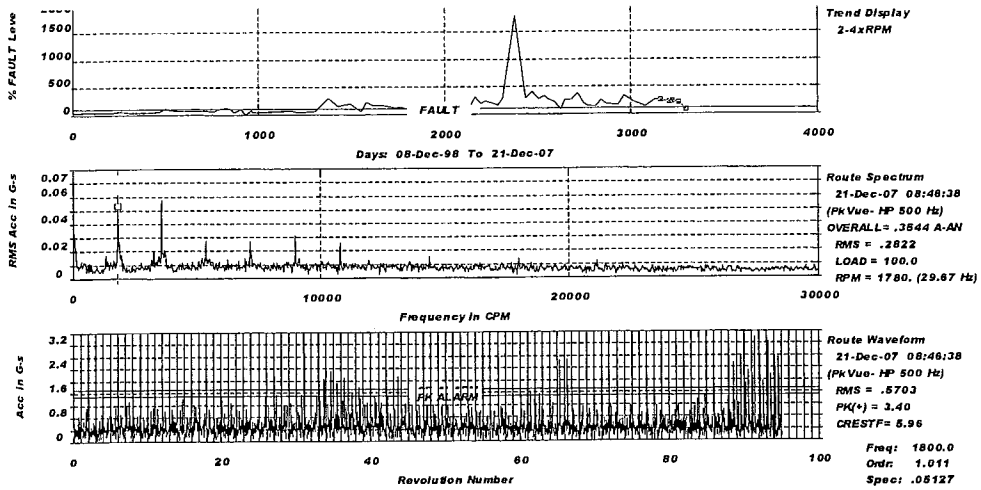
% FAULT Leve
1500
1000
500
0
FAULT
0
1000
2000
3000
4000
Days: 08-Dec-98 To 21-Dec-07
Trend Display
2-4xRPM
RMS Acc In G-s
0.07
0.06
0.04
0.02
0
0
10000
20000
30000
Frequency In CPM
Route Spectrum
21-Dec-07 08:46:38
(PkVue- HP 500 Hz)
OVERALL= .3544 A-AN
RMS = .2822
LOAD = 100.0
RPM = 1780. (29.67 Hz)
Acc In G-s
3.2
2.4
1.6
0.8
0
FK ALARM
0
20
40
60
80
100
Revolution Number
Route Waveform
21-Dec-07 08:46:38
(PkVue- HP 500 Hz)
RMS = .5703
PK(+) = 3.40
CRESTF= 5.96
Freq: 1800.0
Ordr: 1.011
Spec: .05127

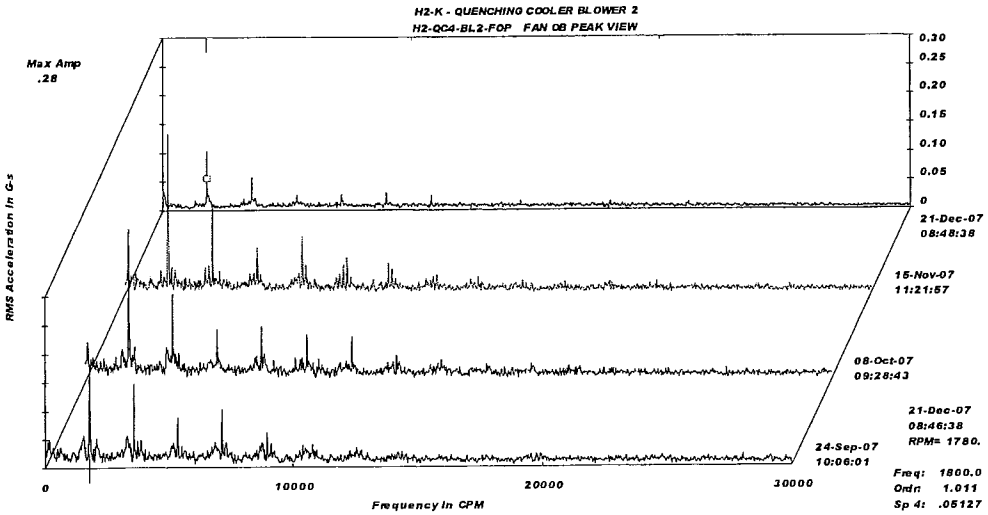
H2-K - QUENCHING COOLER BLOWER 2
H2-QC4-BL2-FOP FAN OB PEAK VIEW
Max Amp
.28
RMS Acceleration In G-s
0.30
0.25
0.20
0.15
0.10
0.05
0
21-Dec-07
08:46:38
15-Nov-07
11:21:57
08-Oct-07
09:28:43
24-Sep-07
10:06:01
21-Dec-07
08:46:38
RPM= 1780.
0
10000
20000
30000
Frequency In CPM
Freq: 1800.0
Ordr: 1.011
Sp 4: .05127

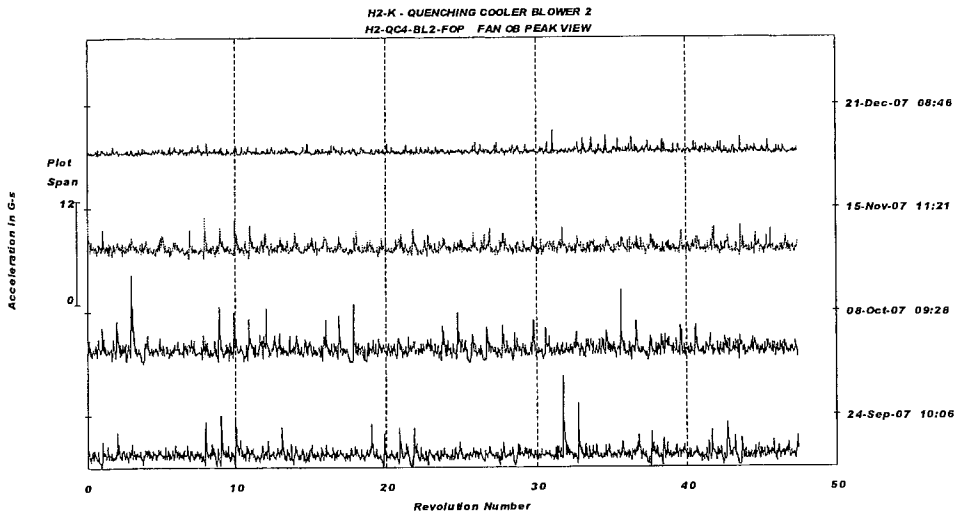
H2-K - QUENCHING COOLER BLOWER 2
H2-QC4-BL2-FOP FAN OB PEAK VIEW
Acceleration In G-s
Plot
Span
12
0
21-Dec-07 08:46
15-Nov-07 11:21
08-Oct-07 09:28
24-Sep-07 10:06
0
10
20
30
40
50
Revolution Number

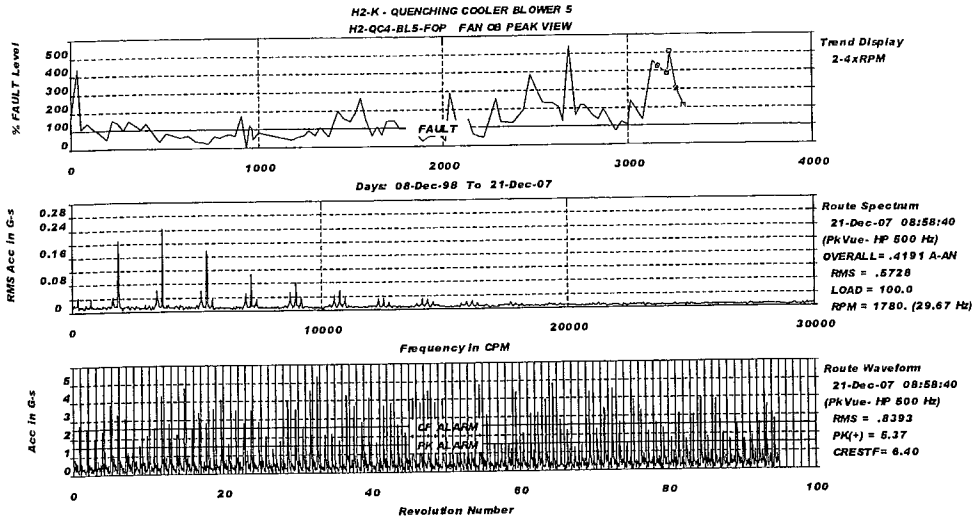
H2-K - QUENCHING COOLER BLOWER 5
H2-QC4-BL5-FOP FAN OB PEAK VIEW
% FAULT Level
Trend Display
2-4xRPM
FAULT
Days: 08-Dec-98 To 21-Dec-07
RMS Acc in G-s
Route Spectrum
21-Dec-07 08:58:40
(PkVue- HP 500 Hz)
OVERALL= .4191 A-AN
RMS = .5728
LOAD = 100.0
RPM = 1780. (29.67 Hz)
Frequency in CPM
Acc in G-s
Route Waveform
21-Dec-07 08:58:40
(PkVue- HP 500 Hz)
RMS = .8393
PK(+) = 5.37
CRESTF= 6.40
CF ALARM
PK ALARM
Revolution Number

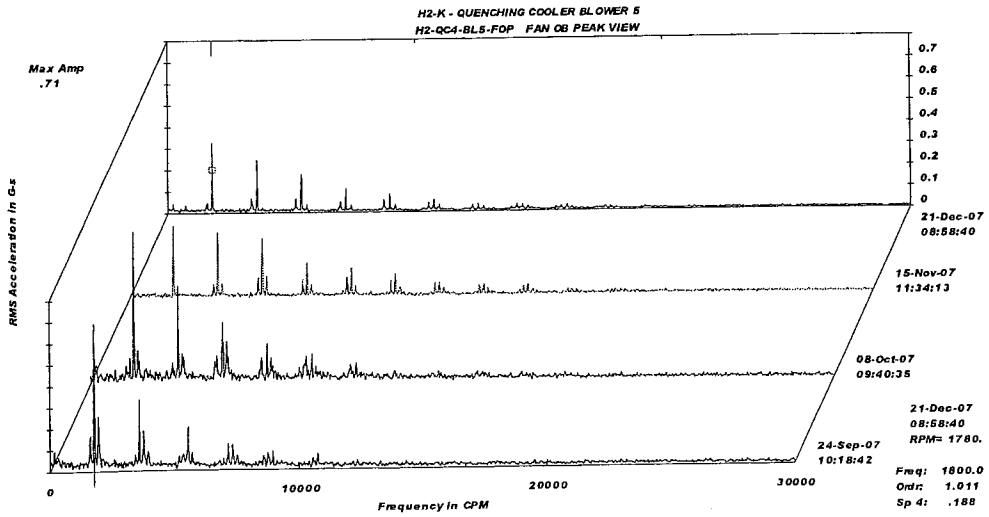
H2-K - QUENCHING COOLER BLOWER 5
H2-QC4-BL5-FOP FAN OB PEAK VIEW
Max Amp
.71
RMS Acceleration in G-s
21-Dec-07
08:58:40
15-Nov-07
11:34:13
08-Oct-07
09:40:35
24-Sep-07
10:18:42
21-Dec-07
08:58:40
RPM= 1780.
Freq: 1800.0
Ordr: 1.011
Sp 4: .188
Frequency in CPM

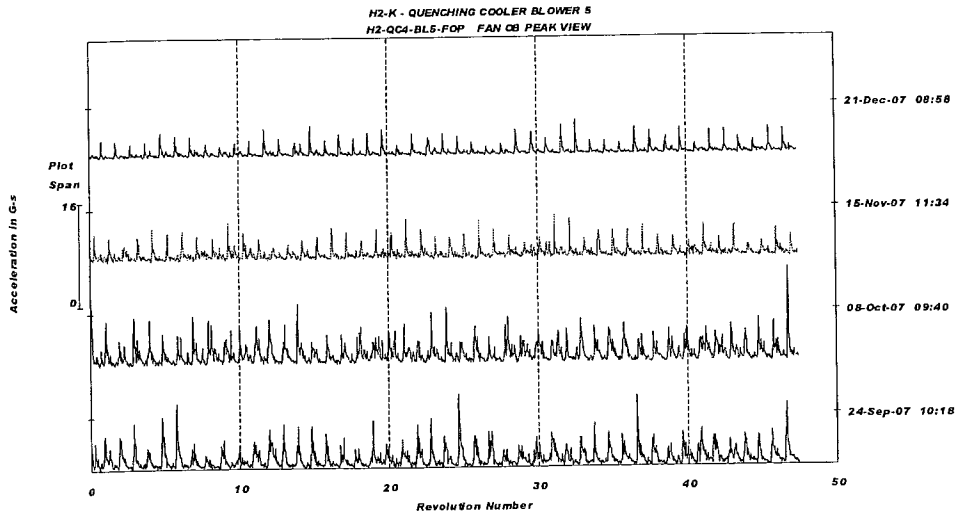
H2-K - QUENCHING COOLER BLOWER 5
H2-QC4-BL5-FOP FAN OB PEAK VIEW
Plot
Span
Acceleration in G-s
21-Dec-07 08:58
15-Nov-07 11:34
08-Oct-07 09:40
24-Sep-07 10:18
Revolution Number

H4-KF1 ID Fan

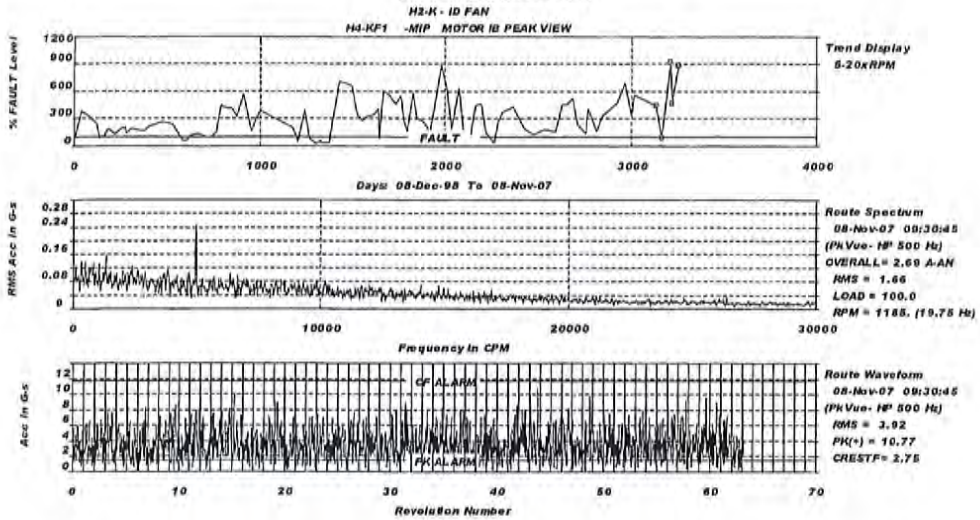
H2-K - ID FAN
H4-KF1 -MIP MOTOR IB PEAK VIEW
% FAULT Level
1200
900
600
300
0
FAULT
0
1000
2000
3000
4000
Days: 08-Dec-98 To 08-Nov-07
Trend Display
5-20xRPM
RMS Acc in G-s
0.28
0.24
0.16
0.08
0
0
10000
20000
30000
Frequency in CPM
Route Spectrum
08-Nov-07 09:30:45
(PkVue- HP 500 Hz)
OVERALL= 2.69 A-AN
RMS = 1.66
LOAD = 100.0
RPM = 1185. (19.75 Hz)
Acc in G-s
12
10
8
6
4
2
0
CF ALARM
PK ALARM
0
10
20
30
40
50
60
70
Revolution Number
Route Waveform
08-Nov-07 09:30:45
(PkVue- HP 500 Hz)
RMS = 3.92
PK(+) = 10.77
CRESTF= 2.75

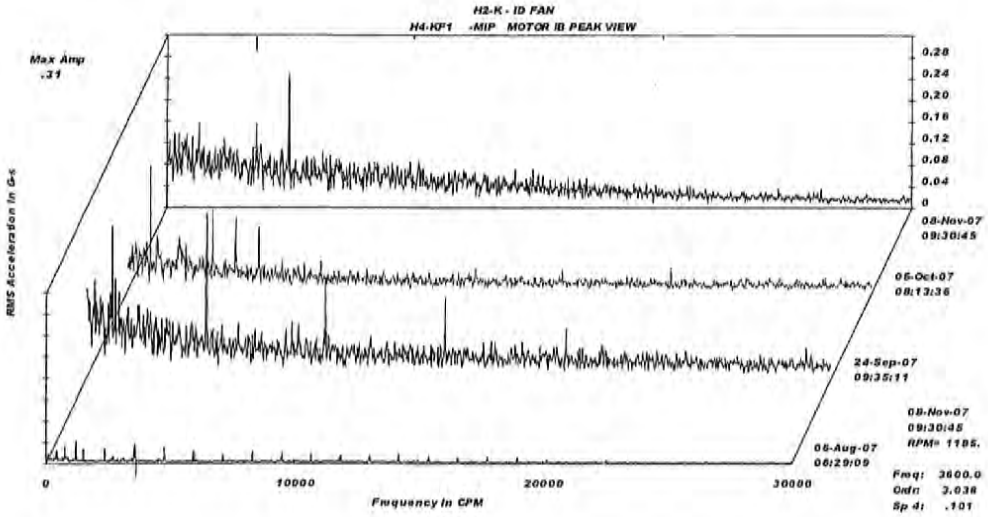
H2-K - ID FAN
H4-KF1 -MIP MOTOR IB PEAK VIEW
Max Amp
.31
RMS Acceleration in G-s
0.28
0.24
0.20
0.16
0.12
0.08
0.04
0
08-Nov-07
09:30:45
05-Oct-07
08:13:36
24-Sep-07
09:35:11
06-Aug-07
06:29:09
08-Nov-07
09:30:45
RPM= 1185.
Freq: 3600.0
Ordr: 3.038
Sp 4: .101
0
10000
20000
30000
Frequency in CPM

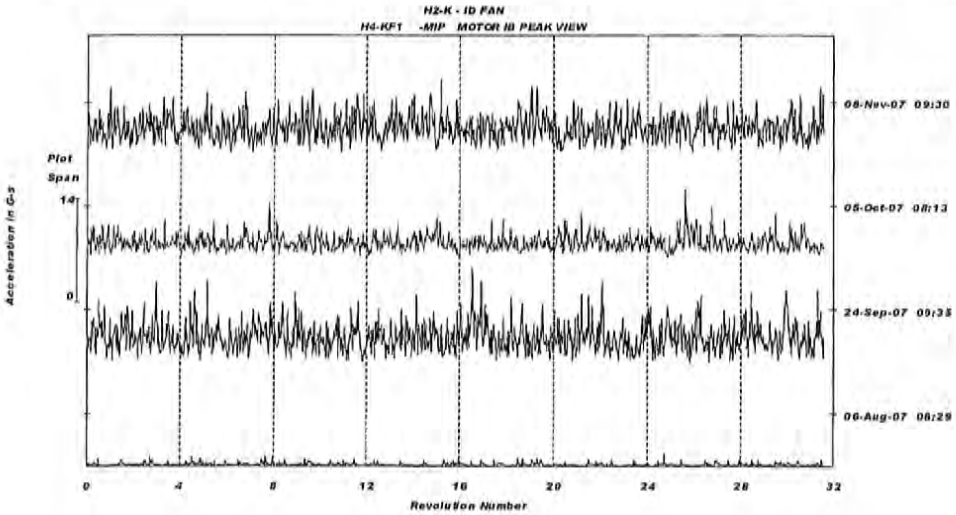
H2-K - ID FAN
H4-KF1 -MIP MOTOR IB PEAK VIEW
Plot
Span
14
0
Acceleration in G-s
08-Nov-07 09:30
05-Oct-07 08:13
24-Sep-07 09:35
06-Aug-07 06:29
0
4
8
12
16
20
24
28
32
Revolution Number

Overall Condition Rating Summary

QUARRY AREA

DATA TAKEN ON 2-11-08

Machines Below Overall Alarms	Machines with problems Detected (In Alarm)			
Good to Excelent Operating Condition	OPERATIONAL	Trend Problem Only Priority 3	Schedule Repair at Convenience Priority 2	Maintenance Required ASAP Priority 1
	PAN FEEDER B2-PF1 OVERLAND DRIVE 4 B5-BC4 OVERLAND DRIVE 2 B5-BC3-D2 OVERLAND DRIVE 1 B5-BC3-D1		IMPACT CRUSHER B2-1C1 OVERLAND DRIVE 3 B5-BC3-D3	

Priority 1: These machines have such high levels that they may suffer catastrophic failure if action is not taken quickly.

Priority 2: Although these machines also have significant vibration levels or noticeable component wear problems, the Maintenance Department should schedule repair at their earliest convenience.

Priority 3: Problems detected on these machines require only trending, future surveys will check for possible condition deterioration.

QUARRY AREA
FINDINGS
DATA TAKEN ON 2-11-08

Priority 2

Machine: Overland Drive Gearbox B5-BC3-D3

The gearbox on this drive is showing increased gearmesh frequinces. The readings are not high enough for any action to be taken at this time. I will continue to check this unit for any change in the readings and monitor on a more frequent basis.

Machine: B2-1C1 Impact Crusher

The outboard bearing on the crusher is showing signs of a fault. The waveform is showing a large spike. The crusher was not loaded at time of survey giving me a good look at just the bearing. I will continue to trend for any increase in the readings.

Machine: B2-1C1 Impact Crusher

The motor inboard bearing is showing signs of a fault. The readings have been increasing for a few surveys. I will continue to trend this bearing for any increase in the readings.

B5-BC3-D3 Gearbox

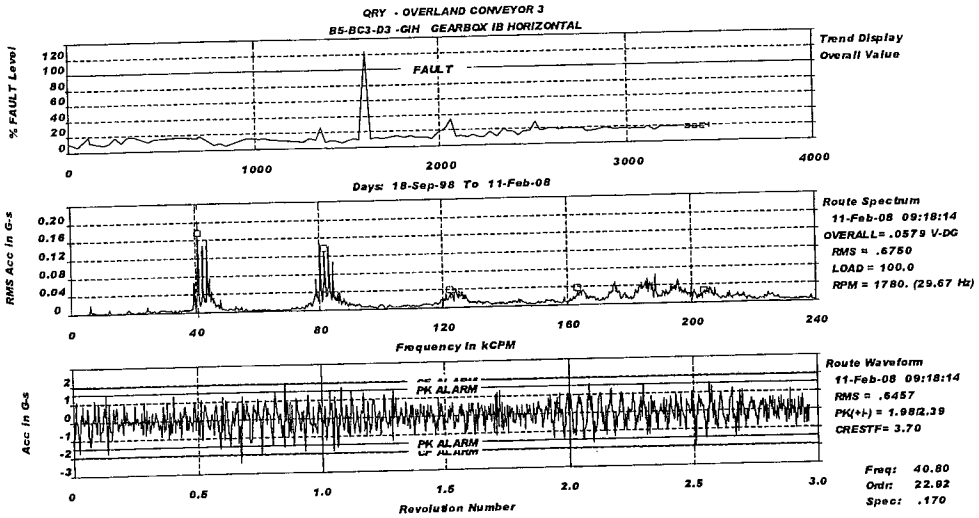

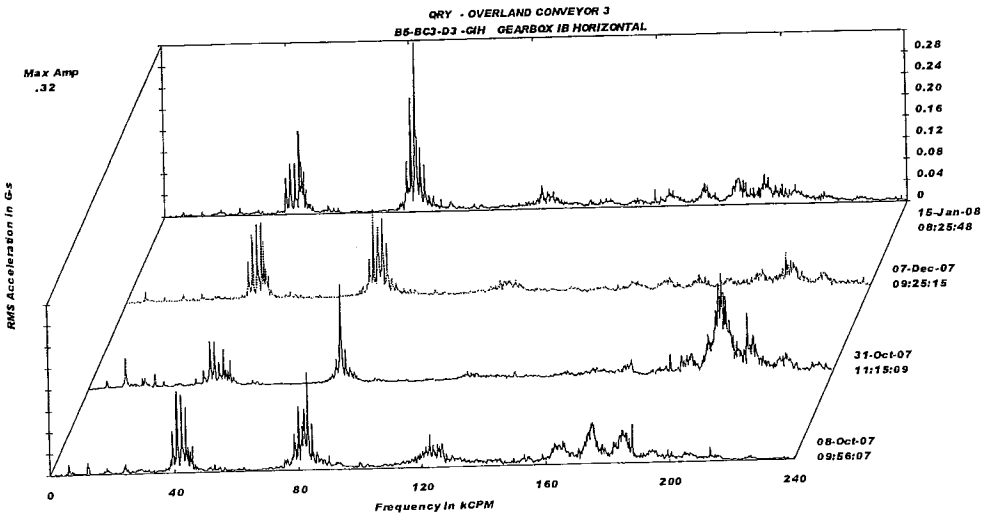

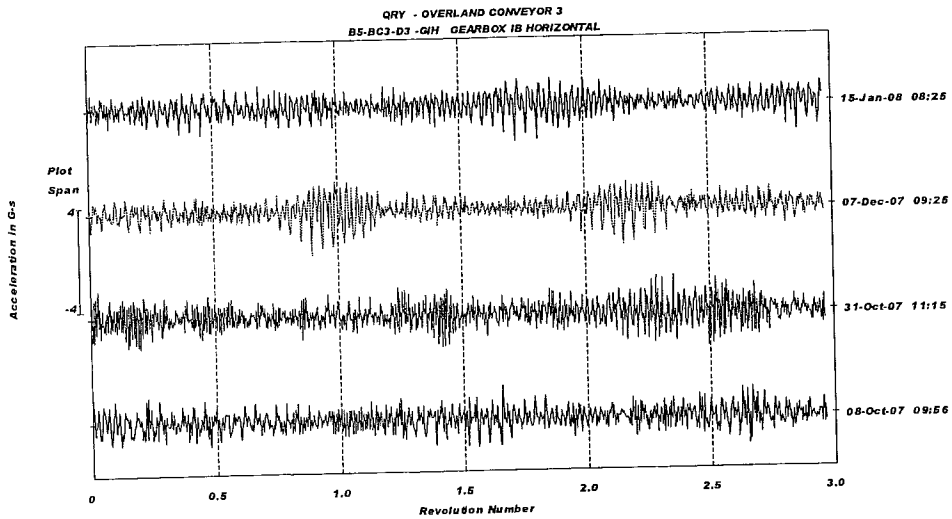

B2-1C1 Crusher Outboard Bearing

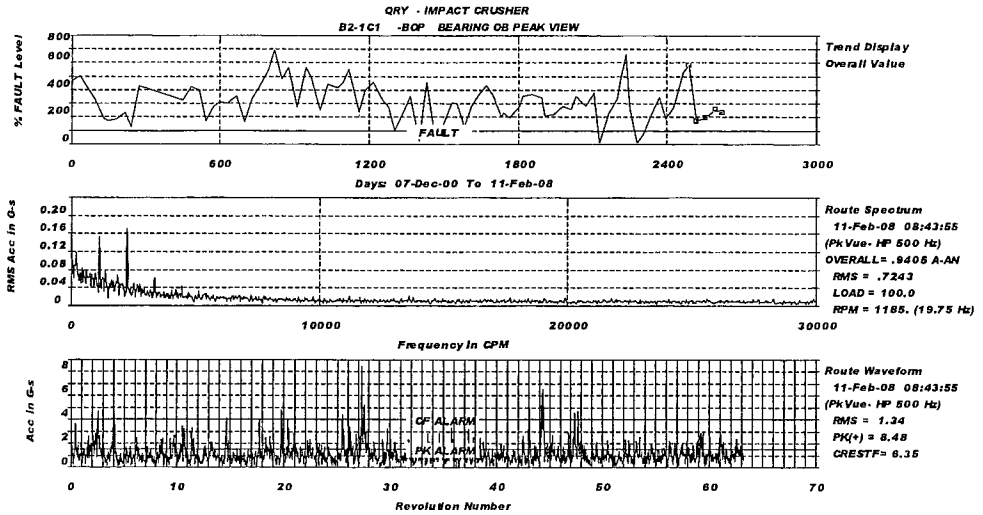

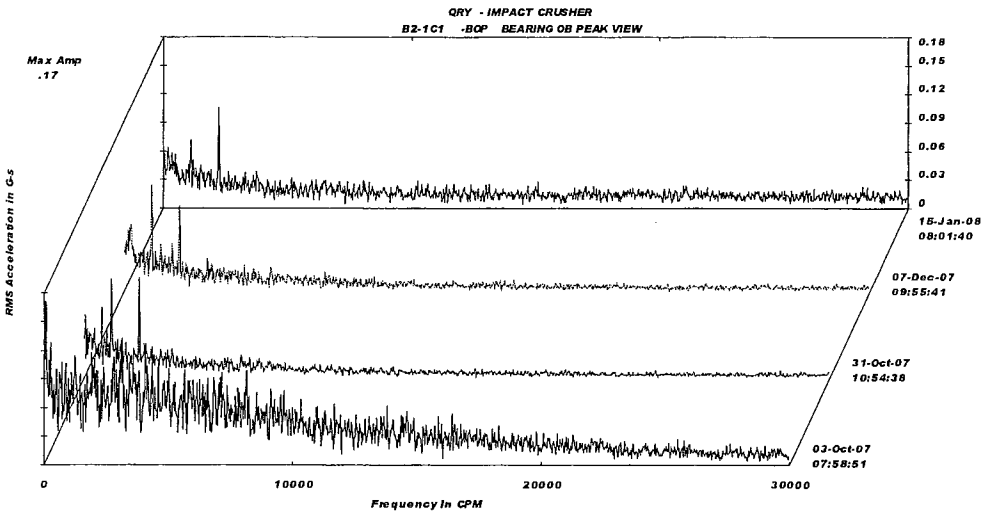

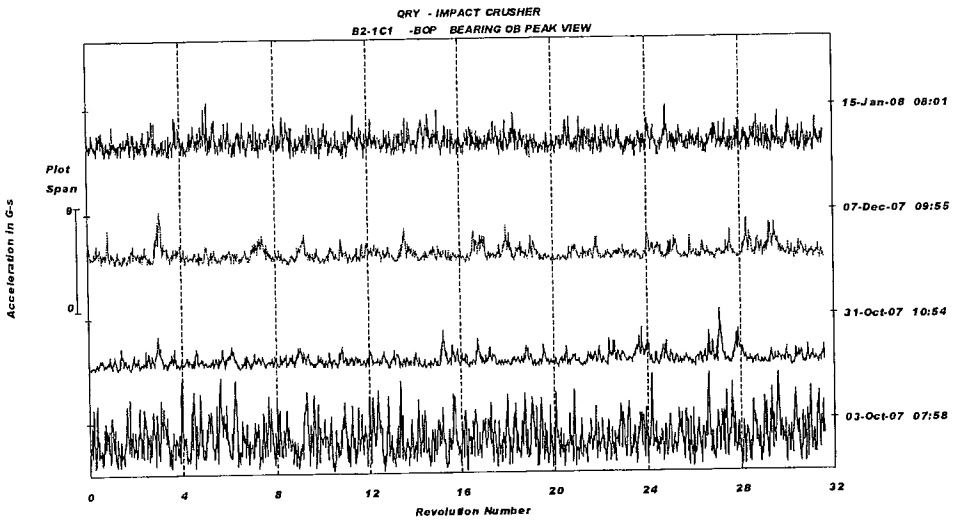

B2-1C1 Impact Crusher Motor Inboard Bearing

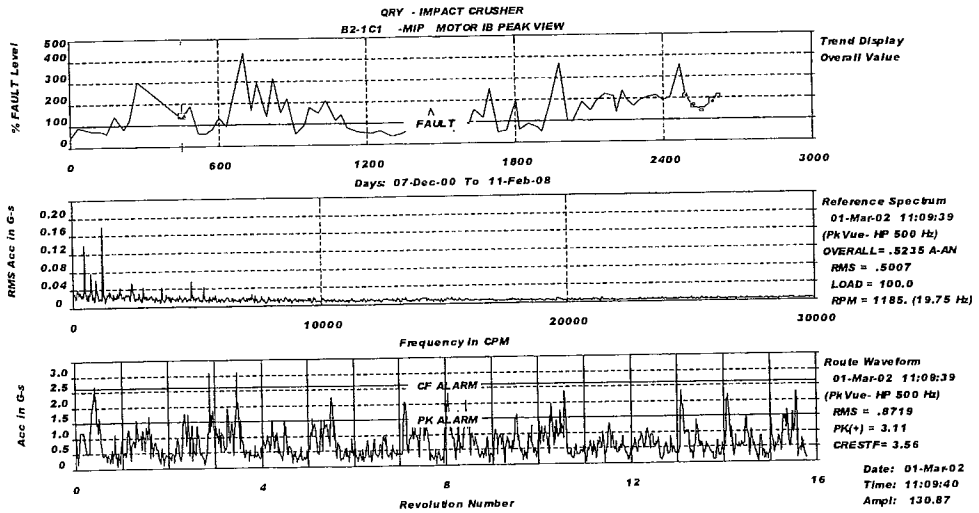

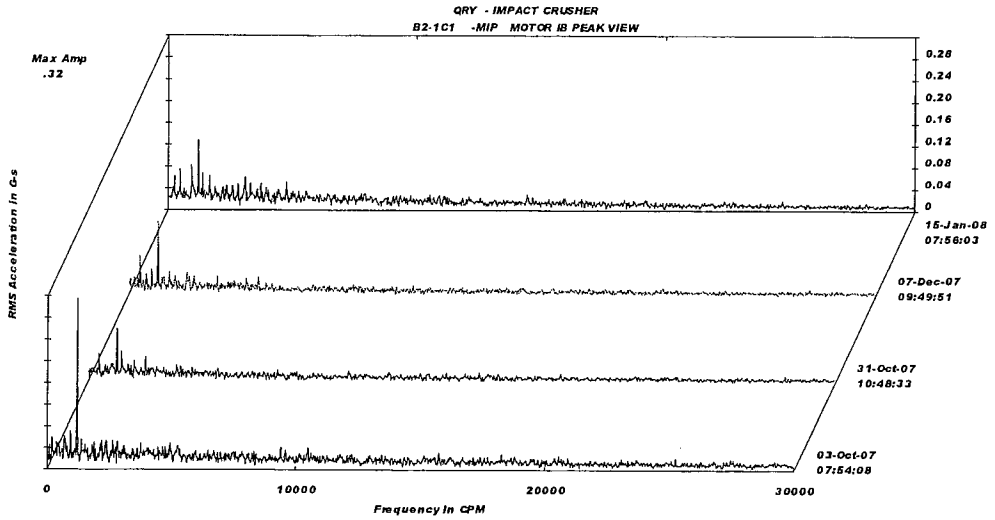
QRY - IMPACT CRUSHER
B2-1C1 -MIP MOTOR IB PEAK VIEW
Max Amp
.32
RMS Acceleration in Gs
0.28
0.24
0.20
0.16
0.12
0.08
0.04
0
15-Jan-08
07:56:03
07-Dec-07
09:49:51
31-Oct-07
10:48:33
03-Oct-07
07:54:08
0
10000
20000
30000
Frequency in CPM

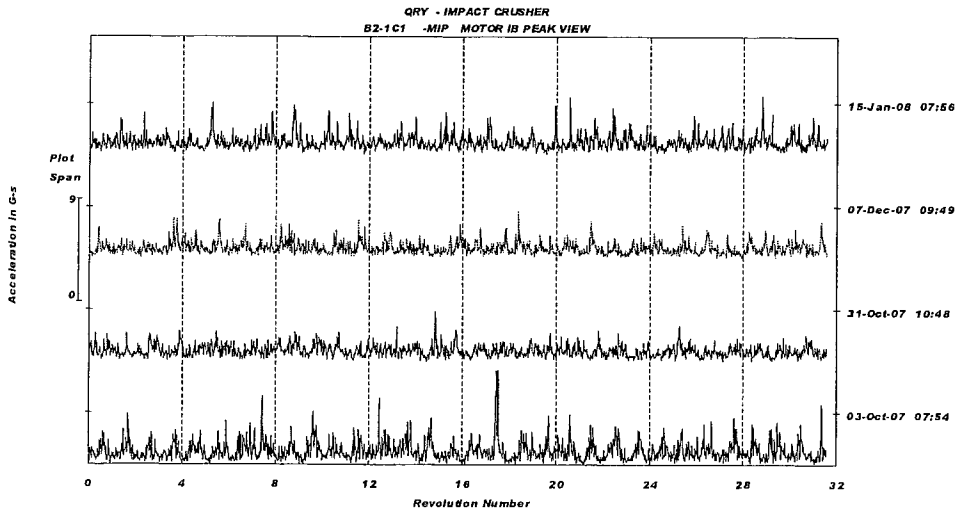
QRY - IMPACT CRUSHER
B2-1C1 -MIP MOTOR IB PEAK VIEW
Plot
Span
9
0
Acceleration in G-s
15-Jan-08 07:56
07-Dec-07 09:49
31-Oct-07 10:48
03-Oct-07 07:54
0
4
8
12
16
20
24
28
32
Revolution Number

2025 W. HIGHWAY DR., TUCSON, AZ. 85705
Tel (520) 887-4816 Fax (520) 888-6551

Overall Condition Rating Summary

D4 AREA

DATA TAKEN ON 2-11-08

Machines Below Overall Alarms		Machines with problems Detected (In Alarm)		
Equipment not Operating	Good to Excellent Operating Condition	Trend Problem Only Priority 3	Schedule Repair at Convenience Priority 2	Maintenance Required ASAP Priority 1
	FEED CONV D4-BC1-MD DUST COLLECT C2-DC3-DF DUST COLLECT D4-DC2-DF SEPARATOR D4-SS1 DUST COLLECT D4-DC1-DF COMPRESSOR F2-POD-BL1 CYCLONE BL D4-CC1-BL MILL MOTOR D4-RM1-D		COMPRESSOR F2-POD-BL2	

Priority 1: These machines have such high levels that they may suffer catastrophic failure if action is not taken quickly.

Priority 2: Although these machines also have significant vibration levels or noticeable component wear problems, the Maintenance Department should schedule repair at their earliest convenience.

Priority 3: Problems detected on these machines require only trending, future surveys will check for possible condition deterioration.

D4 AREA
FINDINGS
DATA TAKEN ON 2-11-08

Priority 2

Machine: F2-POD-BL2 Compressor

The "G" readings at 3 to 8 x running speed have increased a small amount. This 8 order reading is possibly the number of rotor lobes on both shafts of the compressor indicating that the rotors may be contacting each other. I will continue to trend for any increase in the readings.

F2-POD-BL2 Compressor

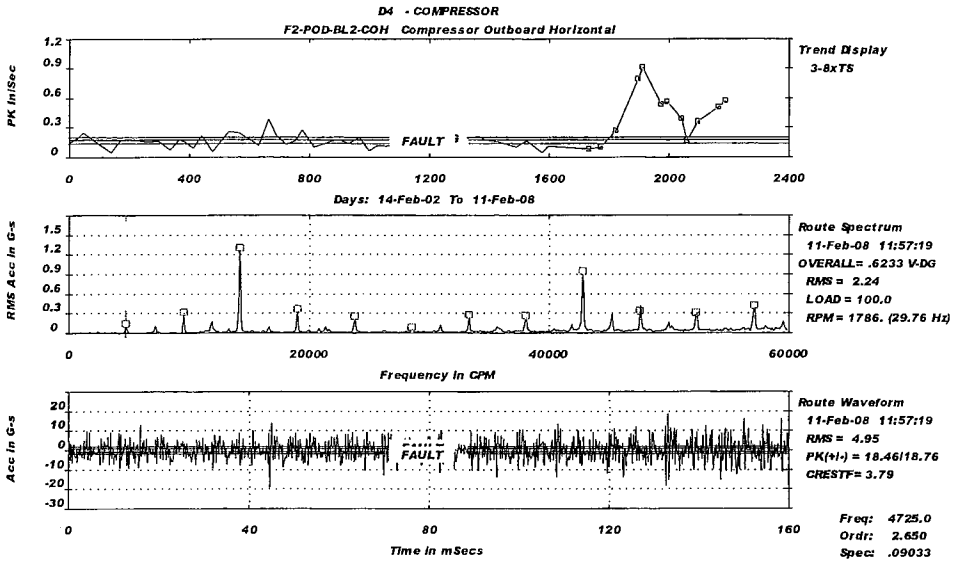

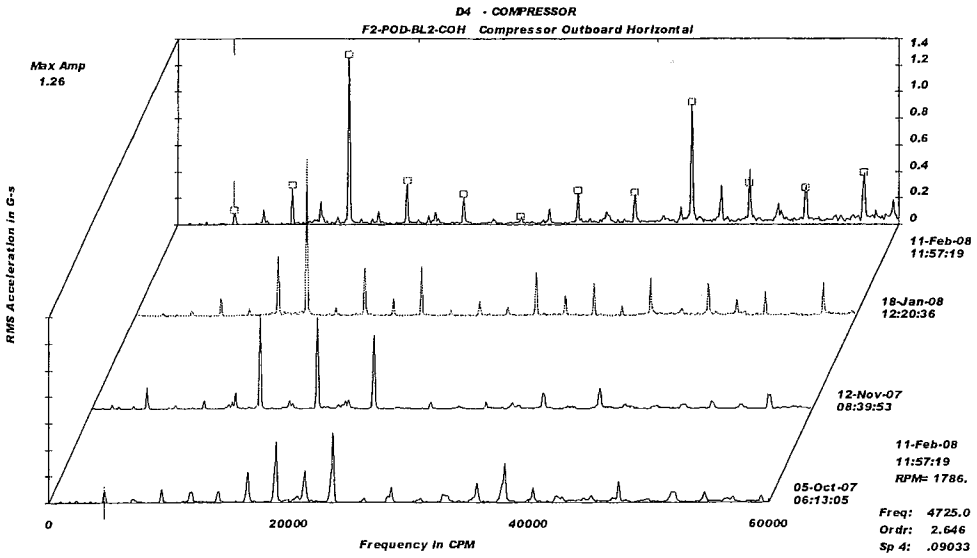

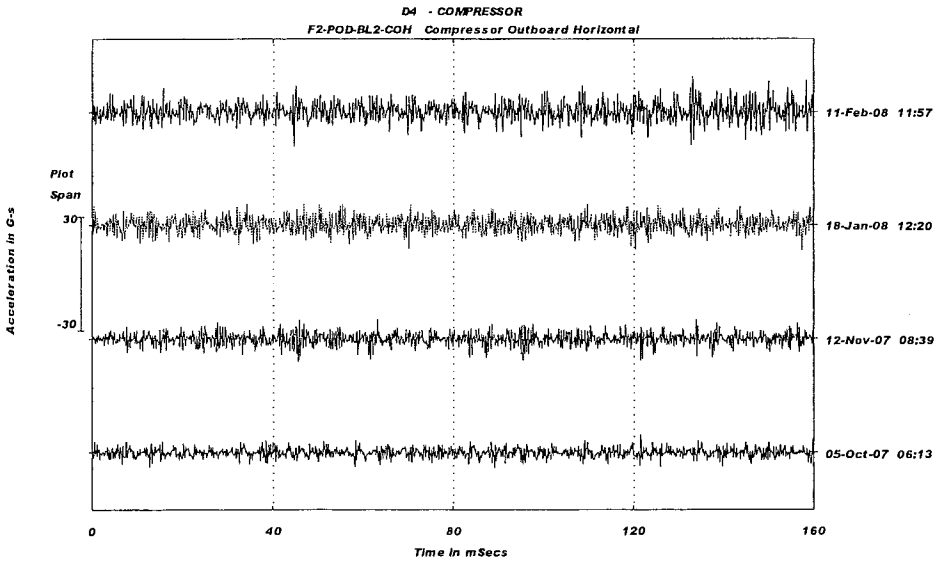

Overall Condition Rating Summary

D3 AREA

DATA TAKEN ON 2-13-08

Machines Below Overall Alarms | **Machines with problems Detected (In Alarm)**

Good to Excellent Operating Condition	Good to Excellent Operating Condition	Trend Problem Only Priority 3	Schedule Repair at Convenience Priority 2	Maintenance Required ASAP Priority 1
ROLL CRU 2 D3-1-HRP2	DRAFT FAN 1 D3-1-DC1			
ROLL CRU 1 D3-1-HRP1	COMP 1 D3-1-FC1			
SEPARATOR D3-1-SS1	COMP 2 D3-1-FC2			
DRAFT FAN 2 D3-DC2	D3 MILL D3-1-M-D			
DRAFT FAN 3 D3-1-DC3	CEM PUMP D3-1-FP1			

D-3 AREA
FINDINGS
DATA TAKEN ON 2-13-08

All equipment in this area is operating at acceptable levels of vibration at time of survey.

Overall Condition Rating Summary

D2 AREA

DATA TAKEN ON 11-06-07

Machines Below Overall Alarms | **Machines with problems Detected (In Alarm)**

Equipment not Operating	Good to Excellent Operating Condition	Trend Problem Only Priority 3	Schedule Repair at Convenience Priority 2	Maintenance Required ASAP Priority 1
	Compressor **D2-1-FC2** **Compressor** **D2-PC-AS-PL** **Seperator** **D2-SS** **Draft Fan** **D2-DC4-DF** **Draft Fan** **D2-PC-DF** **Draft Fan** **D2-1-DC1-DF** **Mill Drive** **D2-MD**		**Compressor** **D2-1-FC1** **Cement Pump** **D2-1-FP1**	

Priority 1: These machines have such high levels that they may suffer catastrophic failure if action is not taken quickly.
Priority 2: Although these machines also have significant vibration levels or noticeable component wear problems, the Maintenance Department should schedule repair at their earliest convenience.
Priority 3: Problems detected on these machines require only trending, future surveys will check for possible condition deterioration.

D-2 AREA
FINDINGS
DATA TAKEN ON 11-06-07

Priority 2

Machine: D2-1-FC1 Compressor

Both motor bearing readings have not increased since last survey. I will trend this unit for one more month for any increase in the readings.

Machine: D2-1-FP1 Cement Pump

The outboard pump bearing is showing signs of a fault. The readings are only trendable at this time.

D2-1-FC1 Motor Bearings

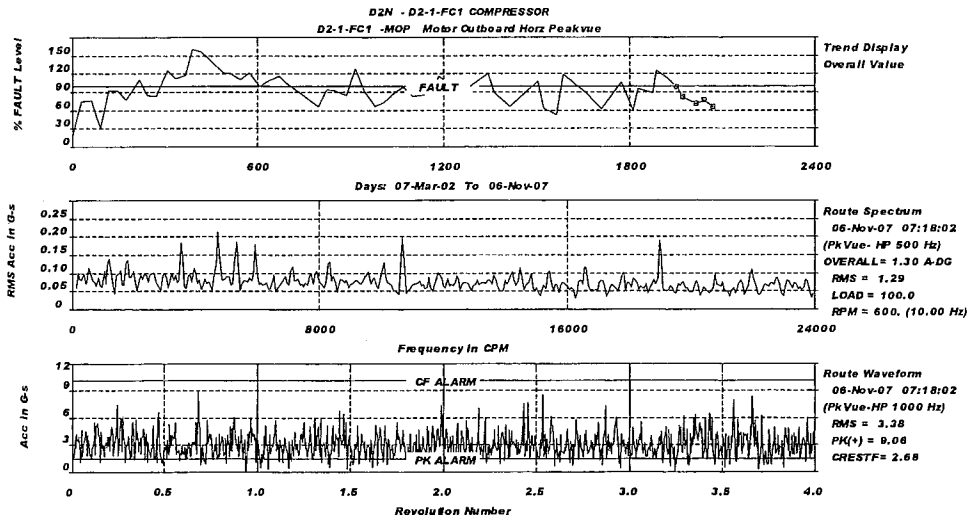

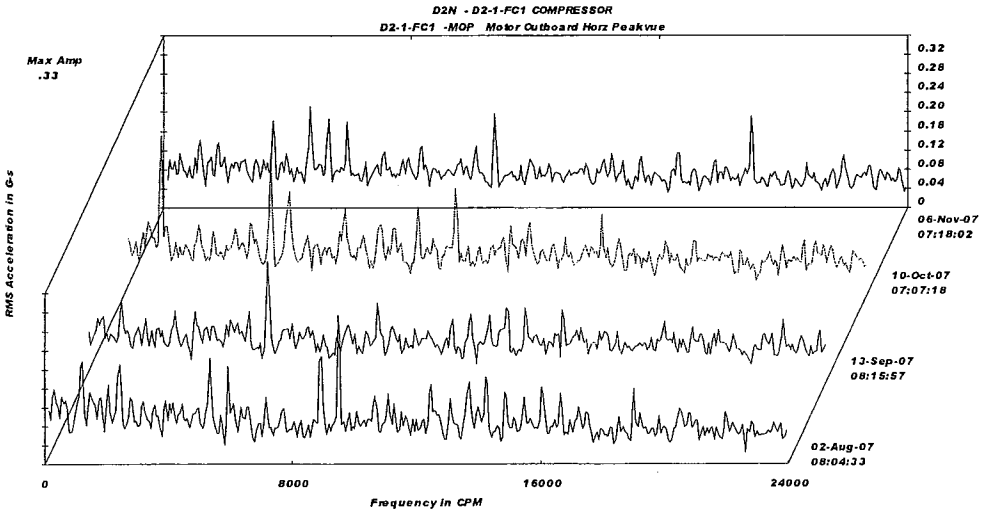

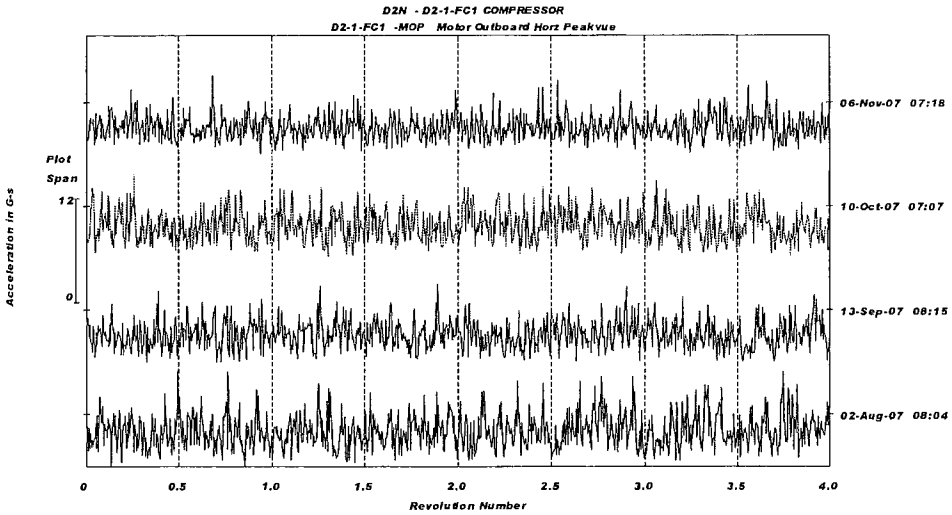

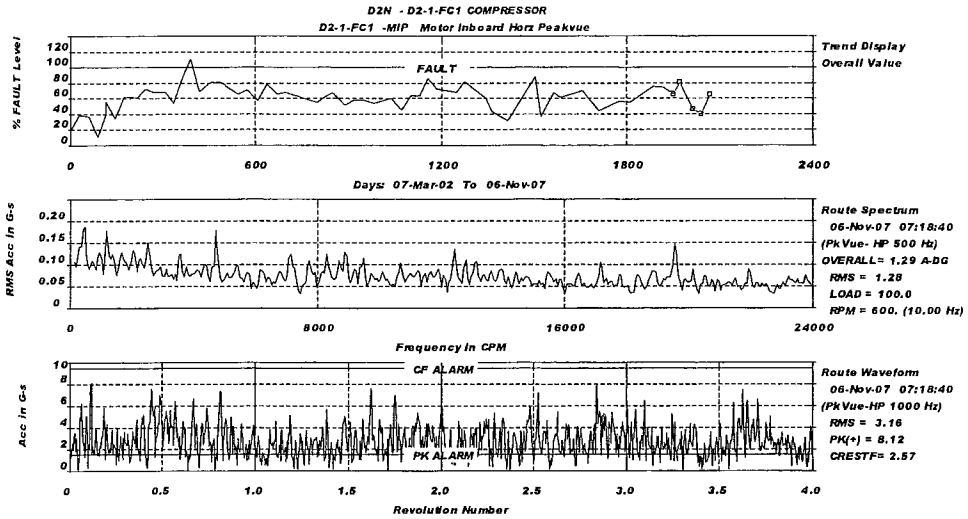
D2N - D2-1-FC1 COMPRESSOR
D2-1-FC1 -MIP Motor Inboard Horz Peakvue
% FAULT Level
FAULT
Trend Display
Overall Value
Days: 07-Mar-02 To 06-Nov-07
RMS Acc in G-s
Route Spectrum
06-Nov-07 07:18:40
(PkVue- HP 500 Hz)
OVERALL= 1.29 A-DG
RMS = 1.28
LOAD = 100.0
RPM = 600. (10.00 Hz)
Frequency in CPM
Acc in G-s
CF ALARM
PK ALARM
Route Waveform
06-Nov-07 07:18:40
(PkVue-HP 1000 Hz)
RMS = 3.16
PK(+) = 8.12
CRESTF= 2.57
Revolution Number

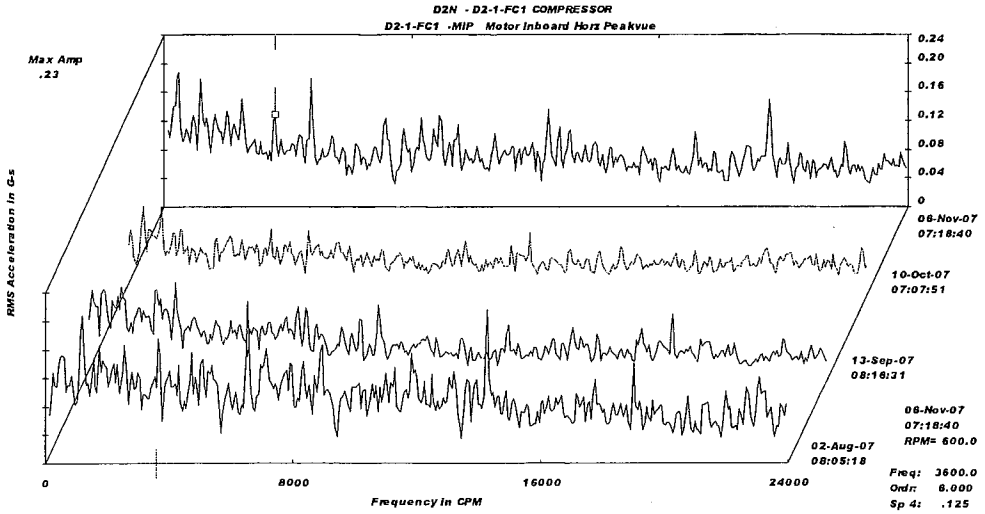
D2N - D2-1-FC1 COMPRESSOR
D2-1-FC1 -MIP Motor Inboard Horz Peakvue
Max Amp
.23
RMS Acceleration in G-s
06-Nov-07
07:18:40
10-Oct-07
07:07:51
13-Sep-07
08:16:31
02-Aug-07
08:05:18
06-Nov-07
07:18:40
RPM= 600.0
Freq: 3600.0
Ordr: 6.000
Sp 4: .125
Frequency in CPM

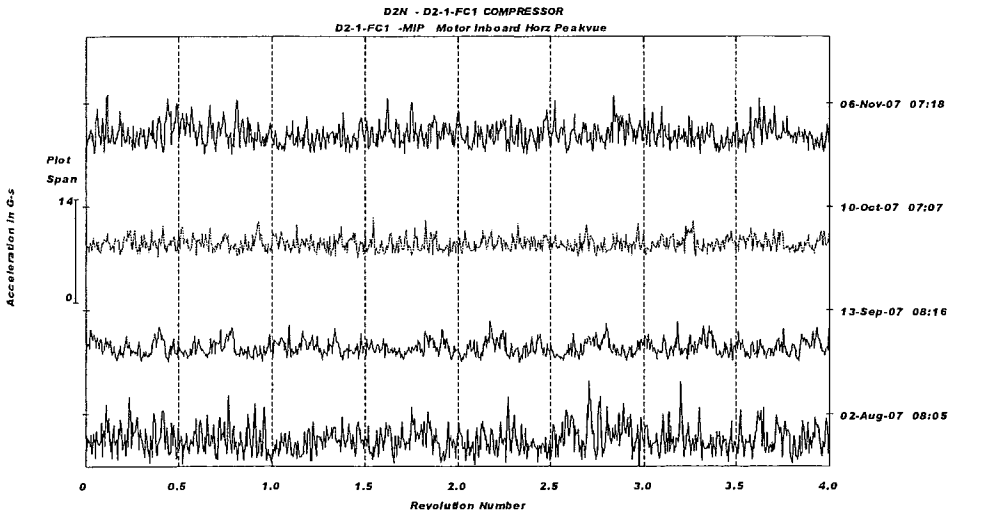
D2N - D2-1-FC1 COMPRESSOR
D2-1-FC1 -MIP Motor Inboard Horz Peakvue
Plot
Span
Acceleration in G-s
06-Nov-07 07:18
10-Oct-07 07:07
13-Sep-07 08:16
02-Aug-07 08:05
Revolution Number

D2-1-FP1 Cement Pump Bearing

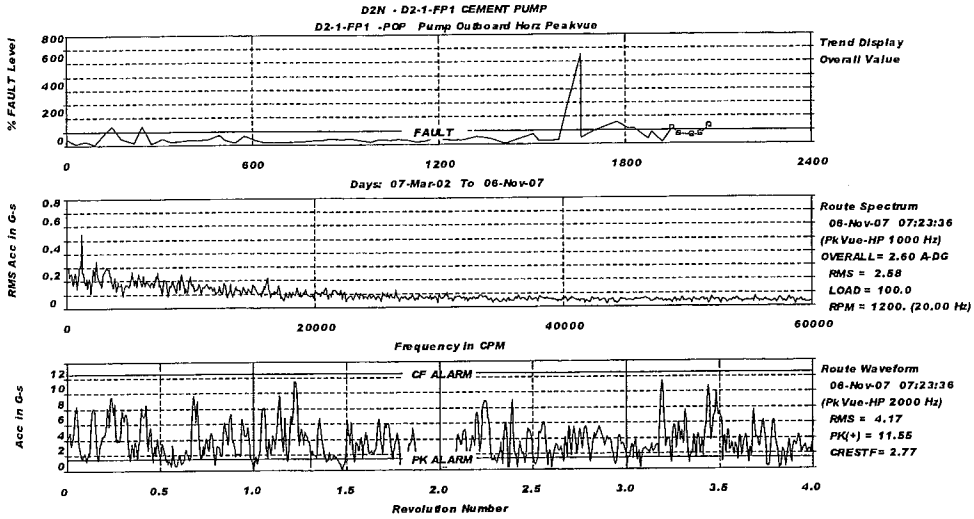

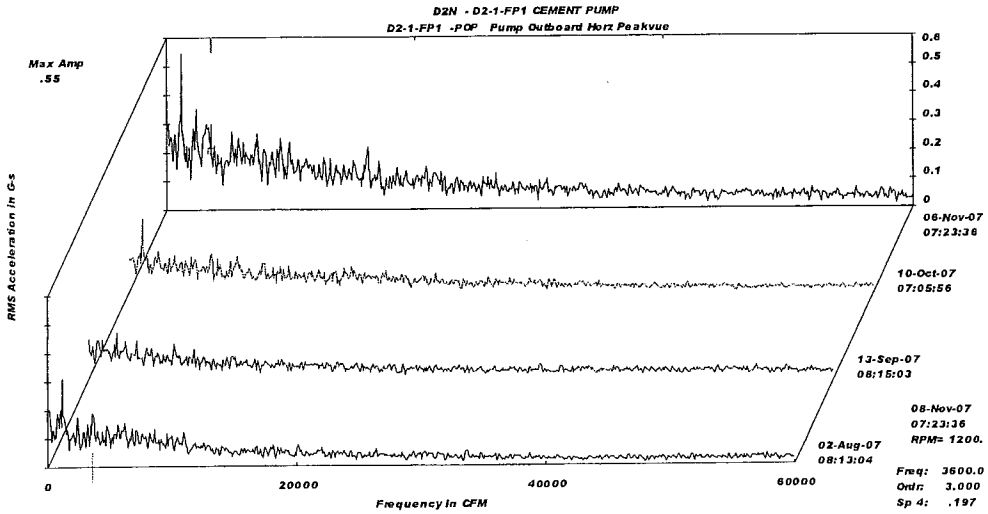

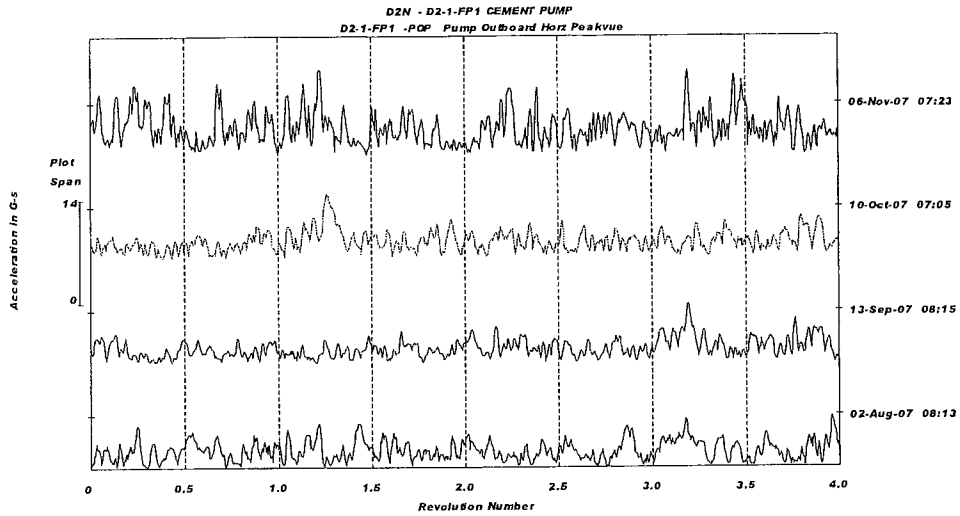

Attachment 3

Troubleshooting Procedures for Air Pollution Control Devices

Troubleshooting Chart

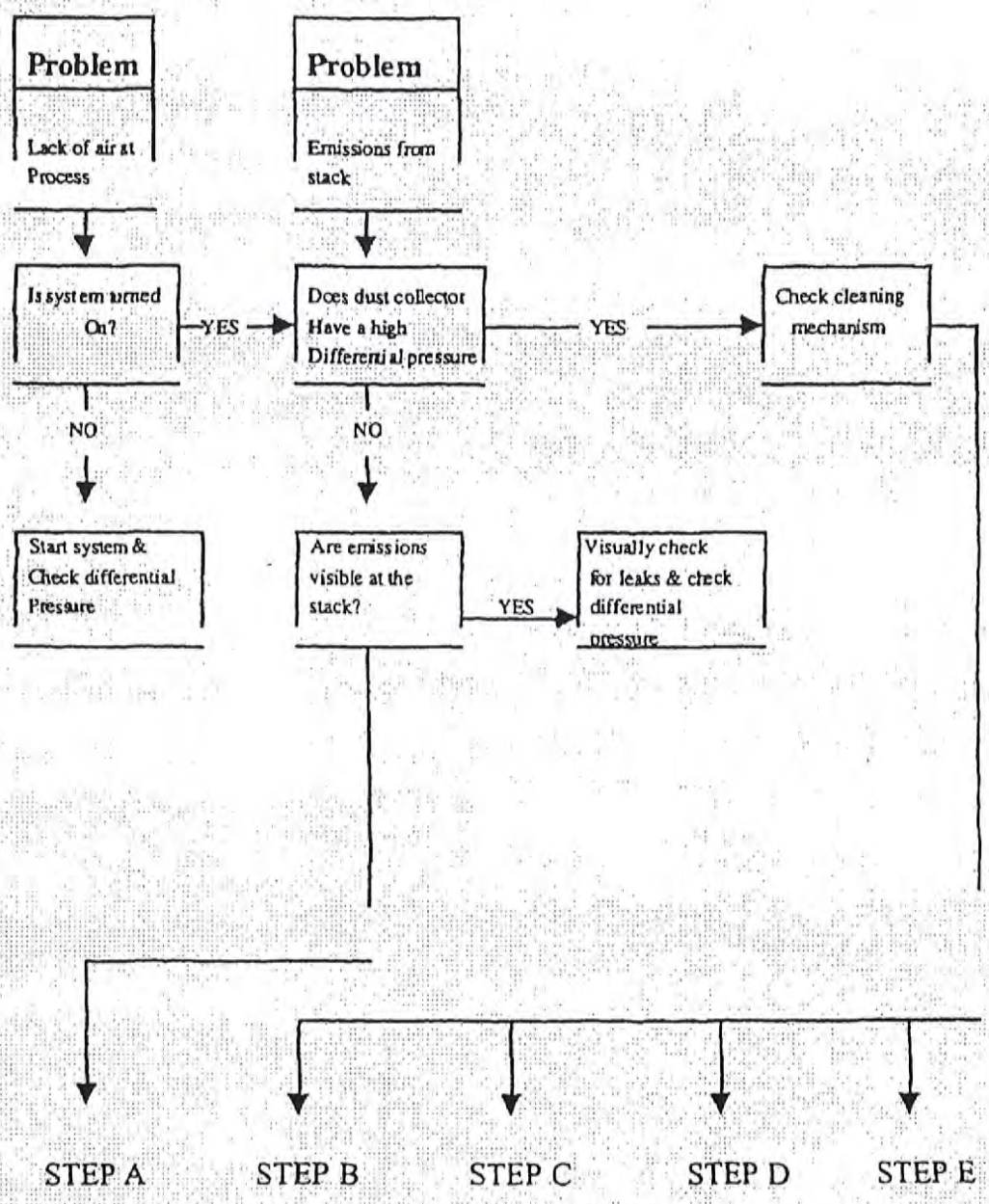

STEP A

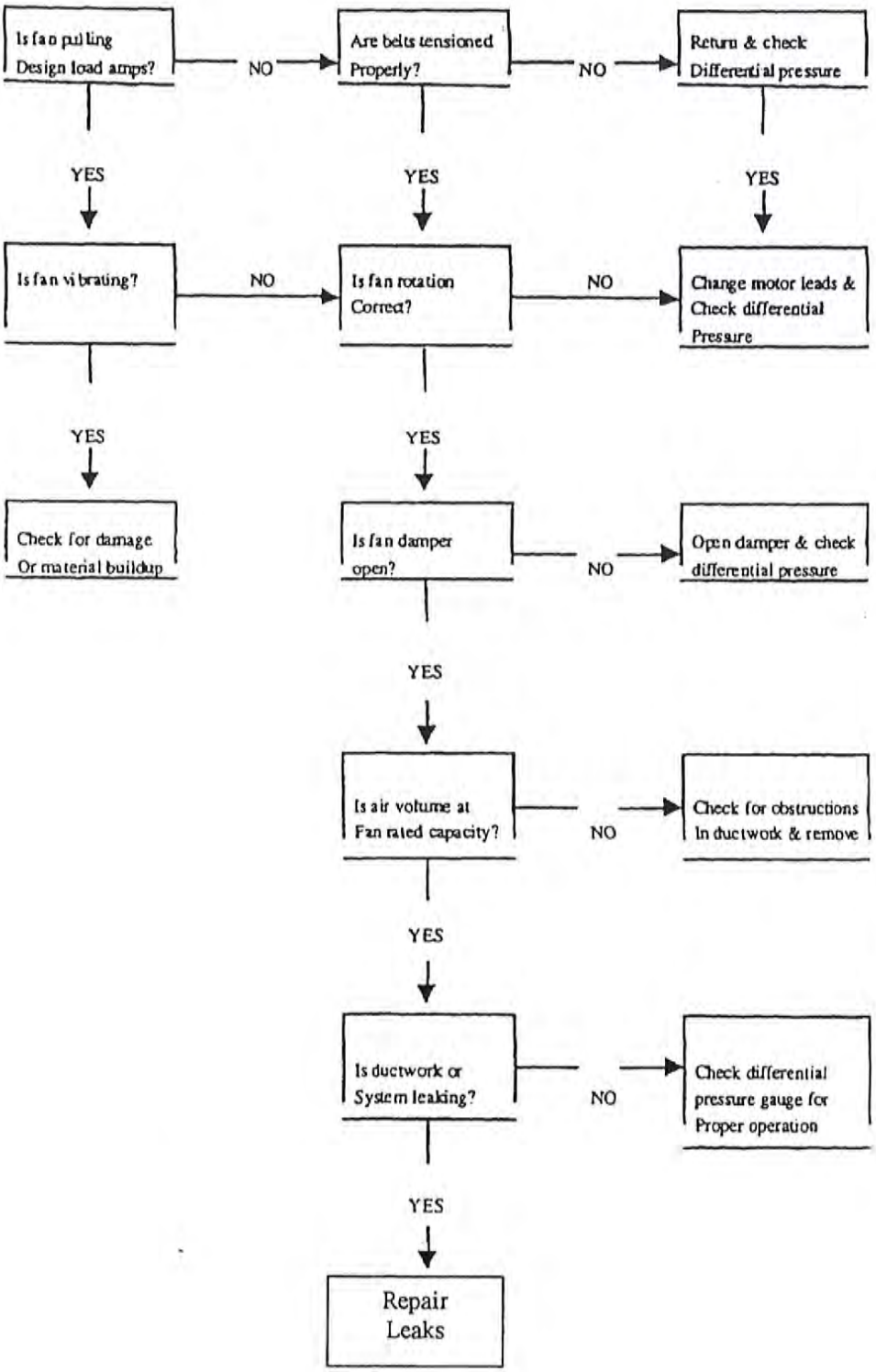
Is fan pulling Design load amps?
NO
Are belts tensioned Properly?
NO
Return & check Differential pressure
YES
YES
YES
Is fan vibrating?
NO
Is fan rotation Correct?
NO
Change motor leads & Check differential Pressure
YES
YES
Check for damage Or material buildup
Is fan damper open?
NO
Open damper & check differential pressure
YES
Is air volume at Fan rated capacity?
NO
Check for obstructions In ductwork & remove
YES
Is ductwork or System leaking?
NO
Check differential pressure gauge for Proper operation
YES
Repair Leaks

STEP B

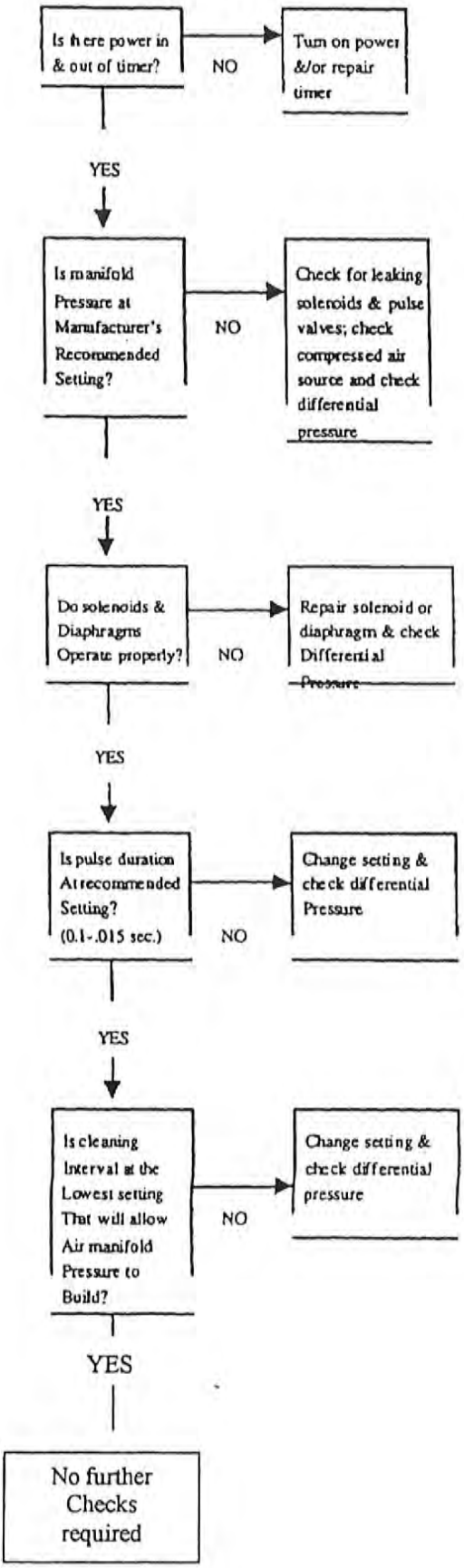
Is there power in & out of timer?
NO
Turn on power &/or repair timer
YES
Is manifold Pressure at Manufacturer's Recommended Setting?
NO
Check for leaking solenoids & pulse valves; check compressed air source and check differential pressure
YES
Do solenoids & Diaphragms Operate properly?
NO
Repair solenoid or diaphragm & check Differential Pressure
YES
Is pulse duration At recommended Setting? (0.1-.015 sec.)
NO
Change setting & check differential Pressure
YES
Is cleaning Interval at the Lowest setting That will allow Air manifold Pressure to Build?
NO
Change setting & check differential pressure
YES
No further Checks required

STEP C

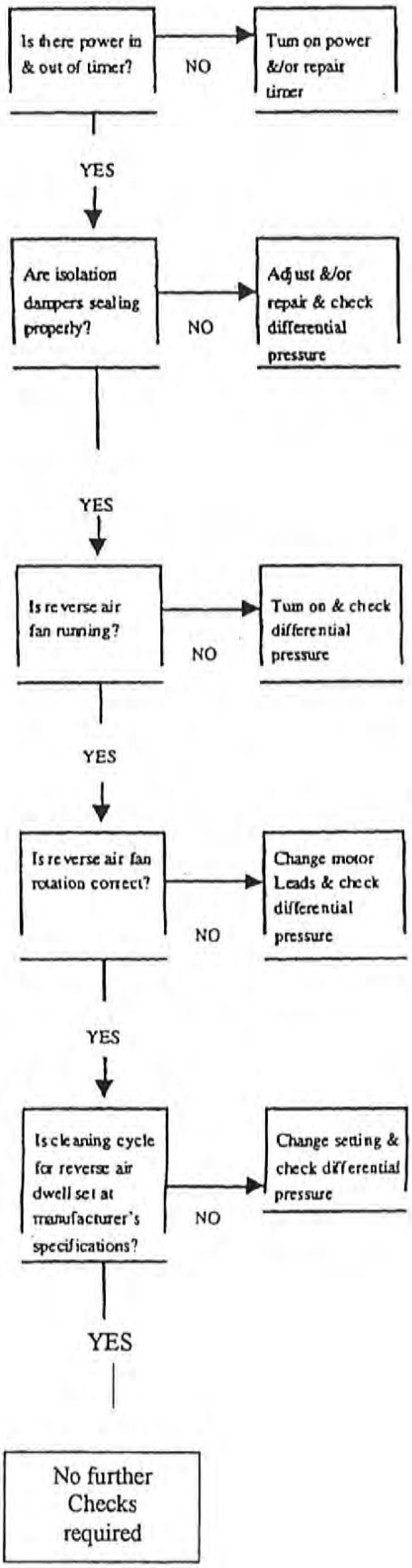
Is there power in & out of timer?
NO
Turn on power &/or repair timer
YES
Are isolation dampers sealing properly?
NO
Adjust &/or repair & check differential pressure
YES
Is reverse air fan running?
NO
Turn on & check differential pressure
YES
Is reverse air fan rotation correct?
NO
Change motor Leads & check differential pressure
YES
Is cleaning cycle for reverse air dwell set at manufacturer's specifications?
NO
Change setting & check differential pressure
YES
No further Checks required

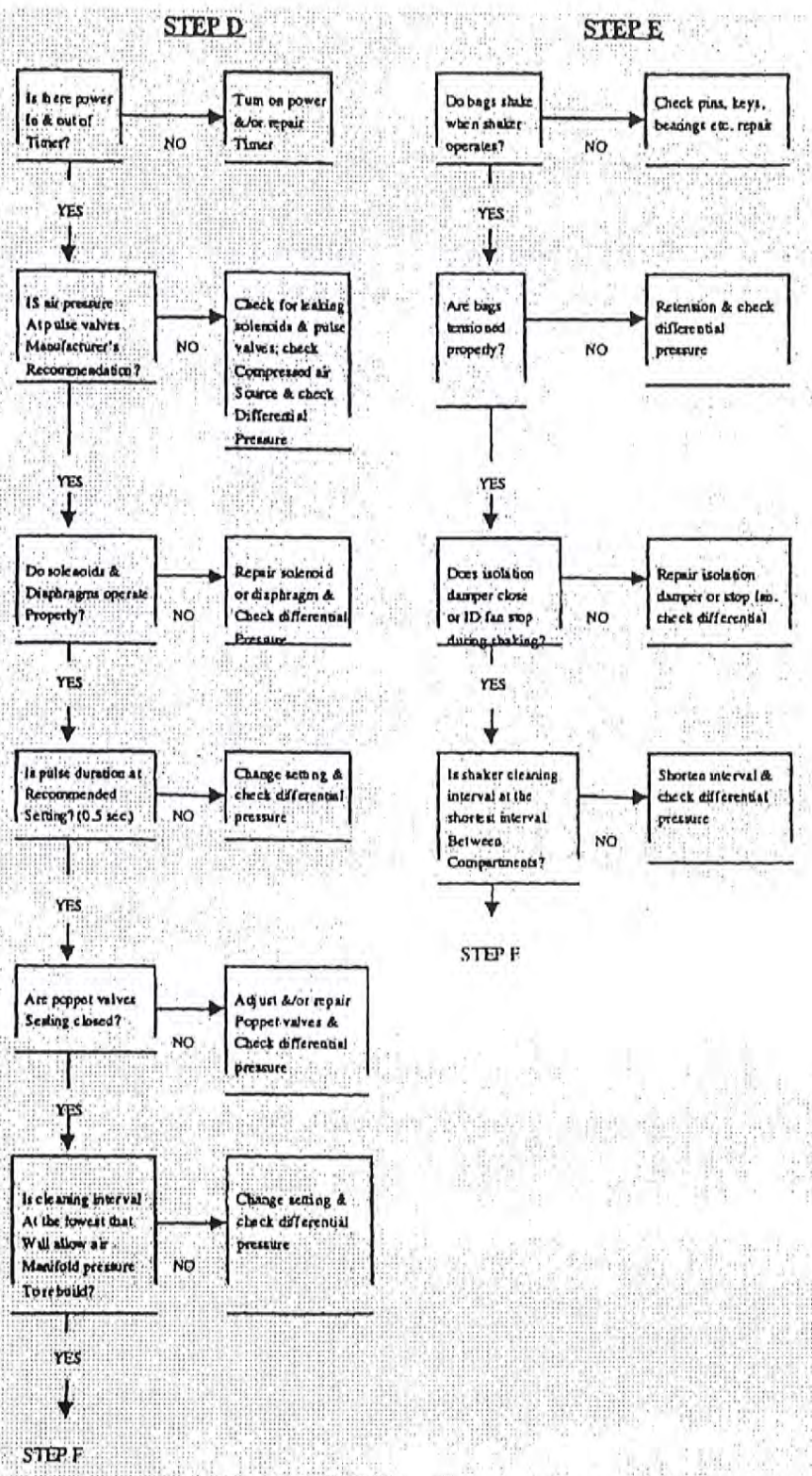
STEP D
Is there power to & out of Timer?
NO
Turn on power &/or repair Timer
YES
IS air pressure At pulse valves Manufacturer's Recommendation?
NO
Check for leaking solenoids & pulse valves; check Compressed air Source & check Differential Pressure
YES
Do solenoids & Diaphragms operate Property?
NO
Repair solenoid or diaphragm & Check differential Pressure
YES
Is pulse duration at Recommended Setting? (0.5 sec)
NO
Change setting & check differential pressure
YES
Are poppet valves Seating closed?
NO
Adjust &/or repair Poppet valves & Check differential pressure
YES
Is cleaning interval At the lowest that Will allow air Manifold pressure To rebuild?
NO
Change setting & check differential pressure
YES
STEP F
STEP E
Do bags shake when shaker operates?
NO
Check pins, keys, bearings etc. repair
YES
Are bags tensioned properly?
NO
Retension & check differential pressure
YES
Does isolation damper close or ID fan stop during shaking?
NO
Repair isolation damper or stop fan, check differential
YES
Is shaker cleaning interval at the shortest interval Between Compartments?
NO
Shorten interval & check differential pressure
STEP F

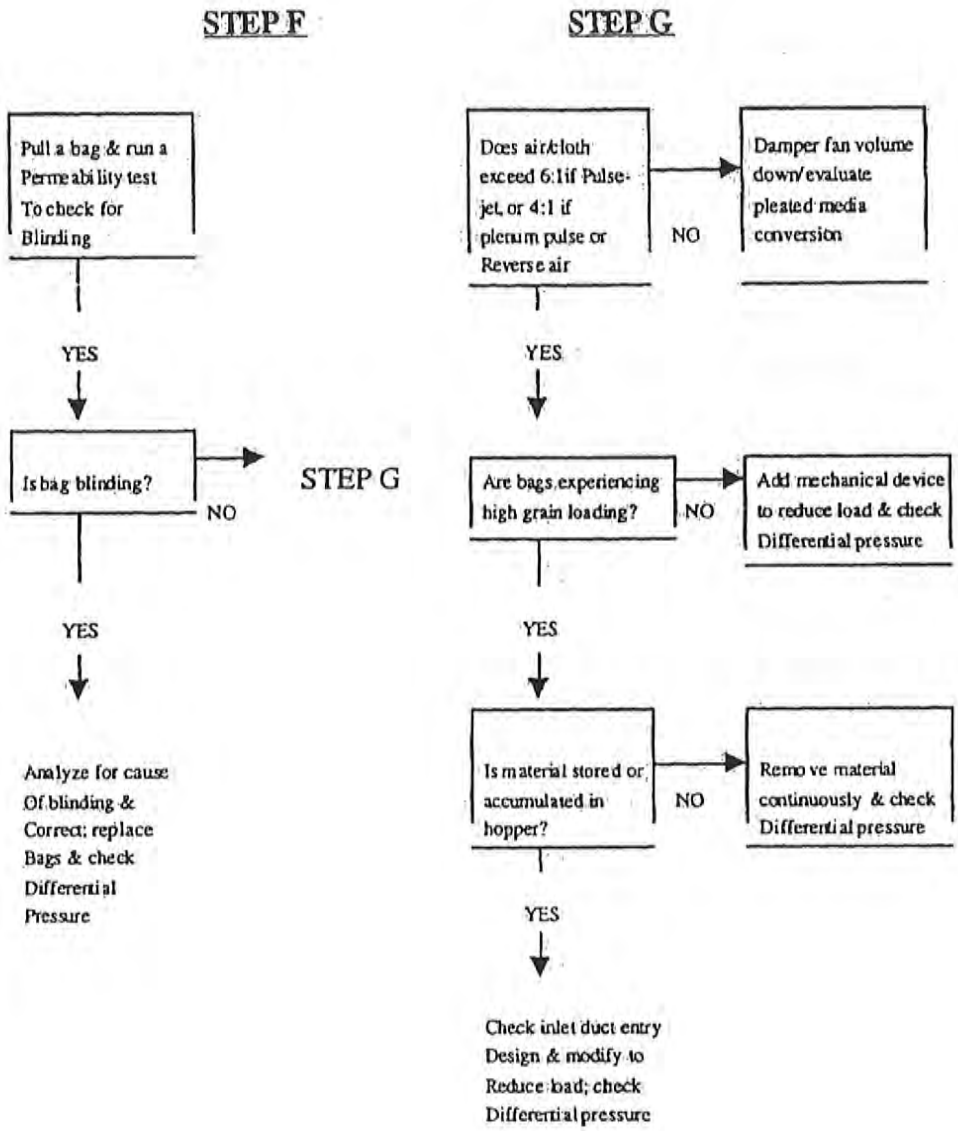

Acknowledgements

Arizona Portland Cement Company wishes to thank BHA of 8800 East 63rd Street, Kansas City, Missouri for the information presented. BHA has been a leader in helping the cement industry achieve environmentally compliant plants.

DUST COLLECTOR NAME: _____

Sample Inspection Sheet

Subject to change

INSPECTED BY (FULL NAMES): _____

PM WORK ORDER NO: _____

INSPECTION DATE: _____ 20___

REPAIR W.O. NO: _____

INSPECTION ITEMS	COMMENTS
DUST BAGS INSPECT ALL BAGS FROM SIDE OR BOTTOM, LOOK FOR HOLES IN BAGS, HEAVILY BLINDED BAGS, "MUD" ON BAGS, MISSING OR BROKEN BAGS, MISSING OR DAMAGED BAND CLAMPS, ETC... IF TIME PERMITS, CHANGE DAMAGED OR WORN BAGS AS NEEDED.	CONDITION OF BAGS: NUMBER OF BAGS CHANGED_____
DIFF. PRESSURE: WITH FAN RUNNING & DOORS CLOSED, NOTE DIFF. PRESSURE	DIFF. PRESSURE: INCHES_____
BLOW TUBES AND VENTURIS INSPECT BLOW TUBES - LOOK FOR LEAKING DRESSER COUPLINGS (INCLUDING DAMAGED OR WORN SEALS), PROPER ATTACHMENT TO DUST COLLECTOR, DAMAGED OR ELONGATED BLOW TUBE HOLES, ETC... REPLACE ANY DRESSER COUPLING SEALS AS REQUIRED INSPECT VENTURIS - LOOK FOR AIR STREAMING DAMAGE, DENTS, HOLES, ETC... REPAIR OR REPLACE AS REQUIRED, INSPECT DIFFUSER (IF (APPLICABLE)	CONDITION OF BLOW TUBES: CONDITION OF VENTURIS: NOTE ANY WORK DONE:
DOORS & CASING INSPECT DOOR - LOOK FOR DAMAGED OR WORN DOOR SEALS, BROKEN, WORN OR DAMAGED HINGES, CLAMP BOLTS, ETC. REPLACE DOOR SEALS AND REPAIR DOOR(S) AS REQUIRED. NOTE CASING FOR BUCKELLING OR CRACKING AND REPAIR AS NECESSARY.	CONDITION OF DOORS: NOTE ANY WORK DONE:
SOLENOID VALVES REMOVE COVERS AND INSPECT ALL DIAPHRAGMS, REPLACE ANY THAT ARE WORN, CRACKED OR IF PARTS ARE MISSING, IF MORE THAN HALF OF DIAPHRAGMS ARE BAD, REPLACE ALL DIAPHRAGMS	CONDITION OF DIAPHRAGMS: NUMBER REPLACED_____
MANOMETER (OR GUAGE) INSPECT FOR CRACKED OR DAMAGED MANOMETER TUBES, PLUGGED LINES, REPAIR OR REPLACE MANOMETER, ADD FLUID AS REQUIRED. CLEAN WATER TRAPS, INSPECT GUAGES.	NOTE ANY WORK DONE:
HI PRESSURE AIR **INSPECT AND REPAIR AS REQUIRED: PRESSURE GUAGES, VALVES, WATER TRAPS (CLEAN/EMPTY WATER), FILTERS (CHANGE FILTER), PRESSURE REGULATOR.**	NOTE ANY WORK DONE: NOTE AIR PRESSURE:_____ PSI
DIRTY AIR COMPARTMENT REMOVE COVERS AND INSPECT DIRTY AIR COMPARTMENT, LOOK FOR WORN DIFUSERS, WORN DUCTS, WORN BOTTOMS OF DC BAGS, DOOR SEAL	CONDITION OF COMPARTMENT: CHECK IF NOT ACCESSIBLE: ____
CLEAN AIR COMPARTMENT REMOVE COVERS AND INSPECT CLEAN AIR COMPARTMENT, LOOK FOR EXCESSIVE DUST, DAMAGED TUBE SHEETS, ETC.. SEAL AND RE-INSTALL DOORS (COVERS)	CONDITION OF COMPARTMENT: CHECK IF NOT ACCESSIBLE: ____
ROTARY FEEDER: CHECK BELTS, BLADES, SHEAVES, WORN METAL HOUSING , GUARDS ETC.	NOTE ANY WORK DONE:
DRAFT FAN: CHECK CONDITION OF DRIVE BELTS, SHEAVES, FAN HOUSING, FAN WHEEL, SHAFT, BEARINGS, COUPLINGS, GUARDS, ETC...	NOTE ANY PROBLEMS OR REPAIRS:

Attachment 4

Sample Inspection Sheets and Work Orders

Sample Inspection Sheet

Subject to change

ARIZONA PORTLAND CEMENT CO.
MAINTENANCE JOB PLAN

Attachment 4

Equipment Location (Dept.)	Equipment No.	Prepared by	File No.
K4 KILN			**H3-K4-CM**
Equipment Description	**H3-K4-CM**	Approved by	Date Prepared
COAL MILL			**3/11/02**
Description of Work			
PM Inspection			
	Repetitive Job? Yes No	Job Frequency RELINE	

JOB STEP	JOB STEP DESCRIPTION	CREW	EST. MAN HOURS	PER	NUMBER COMPLETE	TOTAL EST. HOURS
	NO SMOKING IN THIS AREA!					
1	Lock Out after placing a work tag at Central Control.	2	9	1		
2	Remove shell doors and make interior inspection.					
3	Complete exterior checklist.					
4	Leave in normal running condition after required work and PM inspection are complete.					

QTY.	MATERIAL REQUIRED	QTY.	SPECIAL TOOLS REQUIRED
		1	Tool Kit
		1	Flashlight
		2	Safety Locks

Sample Inspection Sheet

Subject to change

H3-K4-CM INSPECTION REPORT
ARIZONA PORTLAND CEMENT CO. AREA 9C-23

Repairmen: _____ Date: _____ Cost Center: '138-1404 WO#:

CHECK	INITIAL	CONDITION AND REPAIRS MADE
Victaulic Couplings		
Fan Intake Pipe		
Converter Head and Vane		
Deflector Regulator Assy.		
Separator Top		
Deflector Ring		
Deflector Assembly		
Inner Cone		
Air Seal Assembly		
Journal Assembly		
Scraper and Guard Assembly		
Insulation and Cover Assembly		
Tramp Iron Spout Assembly		
Oil Gauge and Piping Assy.		
Mounting Plates		
Mill Drive and Bowl Assembly		
Foundation		
Worm Shaft Assembly		
Mill Side Liner Assembly		
Upper Mill Side and Separator Liner Arrangement		
Feed Chute		

OTHER INFO:

Date Started: Completed:

M.H.'s Inspection: Repair:

Estimated M.H.'s to Repair:

Foreman's Approval:

Sample Inspection Sheet

Subject to change

H3-K4-CM INSPECTION REPORT
ARIZONA PORTLAND CEMENT CO. AREA 9C-23

Repairmen: _____ Date: _____ Cost Center: '138-1404 WO#:

CHECK	INITIAL	CONDITION AND REPAIRS MADE
Motor Base		
Coupling: Grid and Alignment		
Pedestal Bearing: Oil level and condition		
Over all condition		

OTHER INFO:

Date Started: Completed:

M.H.'s Inspection: Repair:

Estimated M.H.'s to Repair:

Foreman's Approval:

Sample Inspection Sheet

Subject to change

H3-K4-CM-BL INSPECTION REPORT
ARIZONA PORTLAND CEMENT CO. AREA 9C-23

Repairmen: _____ Date: _____ Cost Center: '138-1404 WO#:

CHECK	INITIAL	CONDITION AND REPAIRS MADE
Fan Housing		
Fan Blades		
Upper Side Liners		
Spider Assembly		
Foundation-Grout		
Balance Fan		
Misc. Equipment, Hand Rails, Ladder		
Guards		
Condition of Fire Extinguishers in area		

OTHER INFO:

Date Started: Completed:

M.H.'s Inspection: Repair:

Estimated M.H.'s to Repair:

Foreman's Approval:

Sample Inspection Sheet

Subject to change

ARIZONA PORTLAND CEMENT CO.
MAINTENANCE JOB PLAN

Equipment Location (Dept.) K-1 Hood	Equipment No. **Kiln #1 Comb. Burner** **H3-K1-CB**	Prepared by agq	File No. 16-32
Equipment Description Kiln Coal & Gas Pipe Burner		Approved by	Date Prepared 3/15/02
Description of Work PM Inspection			
	Repetitive Job? Yes No	Job Frequency Reline	

JOB STEP	JOB STEP DESCRIPTION
1.	Wait until hood is pulled back before doing inspection.
2.	Any major problems will be noticed upon disassembling hood.
3.	Complete the check list.
4.	All tip repairs should be completed before hood is reassembled.

QTY.	MATERIAL REQUIRED	QTY.	SPECIAL TOOLS REQUIRED

Sample Inspection Sheet

Subject to change

H3-K1-CB

Kiln Gas & Coal Pipes INSPECTION REPORT

ARIZONA PORTLAND CEMENT CO. AREA 16

epairmen: _____ Date:_____ Cost Center: '145-1401 WO#:

CHECK	INITIAL	CONDITION AND REPAIRS MADE
Coal Pipe Blast Gate-TEST Run		
Seal		
Telescope Section		
Flange Connections		
Mount Bolts		
Crank Assembly & Cable		
Blue Ram at Tip		
Burner Tip for Roundness		
Gas Pipe Flex Line Condition		
Quick Connection		
Adjustment Assembly		
Gauges		
Mounts		
Pipe Nozzle		

OTHER INFO:

Date Started: Completed:

M.H.'s Inspection: Repair:

Estimated M.H.'s to Repair:

Foreman's Approval:

Sample Inspection Sheet

Subject to change

ARIZONA PORTLAND CEMENT CO.
MAINTENANCE JOB PLAN

Equipment Location (Dept.) Kiln #1—west end	Equipment No. H3-K1-CM (493)	Prepared by agq	File No. 16-15
Equipment Description Coal Mill & Blower 2		Approved by	Date Prepared 3/15/02
Description of Work PM Inspection			
	Repetitive Job? Yes No	Job Frequency Reline	

JOB STEP	JOB STEP DESCRIPTION
1.	Lock out.
2.	Do check list.
3.	Leave in normal running condition after required work & PM inspection are completed.

QTY.	MATERIAL REQUIRED	QTY.	SPECIAL TOOLS REQUIRED
		1	Tool kit
		2	Safety locks
		1	Light

Sample Inspection Sheet

Subject to change

H3-K1-CM

Coal Mill INSPECTION REPORT

ARIZONA PORTLAND CEMENT CO. AREA 16

PAGE 1

-pairmen: _____ Date: _____ Cost Center: 145-1401 WO#:

CHECK	INITIAL	CONDITION AND REPAIRS MADE
Victaulic Couplings		
Fan Intake Pipe		
Converter Head & Vane		
Deflector Reg. Assembly		
Separator Top		
Deflector Ring		
Deflector Assembly		
Inner Cone		
Air Seal Assembly		
Journal Assembly		
Scraper & Guard Assembly		
Insulation & Cover Assembly		
Tramp Iron Spout Assembly		
Oil Gauge & Piping Assembly		
Mounting Plates		
Mill Drive & Bowl Assembly		
Foundation		
Worm Shaft Assembly		
Mill Side Liner Assembly		
Upper Mill Side & Separator Liner Arrang.		
Feed Chute		
Motor & Base		
Coupling: Grids & Alignment		
Pedistal Bearing: Oil Level & Condition		
Overall Condition		
Fan Housing		
Fan Blades		
Upper Side Liners		
Spider Assembly		

Sample Inspection Sheet

Subject to change

H3-K1-CM

Coal Mill INSPECTION REPORT

ARIZONA PORTLAND CEMENT CO. AREA 16

PAGE 2

Repairmen: _____ Date: _____ Cost Center: 145-1401 WO#:

Foundation—Grout		
Balance Fan		
Misc. Equipment Handrails & Ladder		
Guards		
Condition of Fire Extinguishers in Area		

OTHER INFO:

_____

_____

_____

_____

Date Started: Completed:

M.H.'s Inspection: Repair:

Estimated M.H.'s to Repair:

Foreman's Approval:

Sample Inspection Sheet

Subject to change

H3-K2-CM

Raymond Coal Mill INSPECTION REPORT

ARIZONA PORTLAND CEMENT CO. AREA 17

Pairmen: _____ Date: _____ Cost Center: '138-1402 WO#:

CHECK	INITIAL	CONDITION AND REPAIRS MADE
Victraulic Couplings		
Fan Intake Pipe		
Converter Head & Vane		
Deflector Reg. Assembly		
Separator Top		
Deflector Ring		
Deflector Assembly		
Inner Cone		
Air Seal Assembly		
Journal Assembly		
Scraper & Guard Assembly		
Insulation & Cover Assembly		
Ramp Iron Spout Assembly		
Oil Gauge & Piping Assembly		
Mounting Plates		
Mill Drive & Bowl Assembly		
Foundation		
Worm Shaft Assembly		
Mill Side Liner Assembly		
Upper Mill Side & Separator Liner Arrang.		
Feed Chute		
Motor & Base		
Coupling: Grids & Alignment		
Pedestal Bearing: Oil Level & Condition		
Overall Condition		
Fan Housing		
Fan Blades		
Upper Side Liners		
Spider Assembly		
Foundation—Grout		

Sample Inspection Sheet

Subject to change

ARIZONA PORTLAND CEMENT CO.
MAINTENANCE JOB PLAN

Equipment Location (Dept.) K-2 Hood Kiln Floor	Equipment No. **H3-K2-CB**	Prepared by agq	File No. 17-32
Equipment Description Kiln Coal & Gas Pipe Burner		Approved by	Date Prepared 3/15/02
Description of Work PM Inspection			
	Repetitive Job? Yes No	Job Frequency Reline	

JOB STEP	JOB STEP DESCRIPTION
1.	Wait until hood is pulled back before doing inspection.
2.	Any major problems will be noticed upon disassembling hood.
3.	Complete the check list.
4.	All tip repairs should be completed before hood is reassembled.

QTY.	MATERIAL REQUIRED	QTY.	SPECIAL TOOLS REQUIRED

Sample Inspection Sheet

Subject to change

ARIZONA PORTLAND CEMENT CO.
MAINTENANCE JOB PLAN

Equipment Location (Dept.)	Equipment No.	Prepared by	File No.
Kiln #2—west end		agq	17-16
Equipment Description	H3-K2-CM (493)	Approved by	Date Prepared
Coal Mill & Blower 2			3/15/02
Description of Work			
PM Inspection			
	Repetitive Job? Yes No	Job Frequency	
		Reline	

JOB STEP	JOB STEP DESCRIPTION
1.	Lock out.
2.	Do check list.
3.	Leave in normal running condition after required work & PM inspection are completed.

QTY.	MATERIAL REQUIRED	QTY.	SPECIAL TOOLS REQUIRED
		1	Tool kit
		2	Safety locks
		1	Light

Sample Inspection Sheet

Subject to change

Balance Fan		
Misc. Equipment `ndrails & Ladder		
Guards		
Condition of Fire Extinguishers in Area		

OTHER INFO:

Date Started: Completed:

M.H.'s Inspection: Repair:

Estimated M.H.'s to Repair:

Foreman's Approval:

Sample Inspection Sheet

Subject to change

ARIZONA PORTLAND CEMENT CO.
MAINTENANCE JOB PLAN

Equipment Location (Dept.)	Equipment No.	Prepared by	File No.
K-3 Hood	H3-K3-CB	agq	18-16
Equipment Description		Approved by	Date Prepared
Kiln Coal & Gas Pipe Burner			3/15/02
Description of Work			
PM Inspection			
	Repetitive Job? Yes No	Job Frequency	
		Reline	

JOB STEP	JOB STEP DESCRIPTION
1.	Wait until hood is pulled back before doing inspection.
2.	Any major problems will be noticed upon disassembling hood.
3.	Complete the check list.
4.	All tip repairs should be completed before hood is reassembled.

QTY.	MATERIAL REQUIRED	QTY.	SPECIAL TOOLS REQUIRED

Sample Inspection Sheet

Subject to change

H3-K3-CB

Kiln Gas & Coal Pipes INSPECTION REPORT
ARIZONA PORTLAND CEMENT CO. AREA 18

.epairmen: _____ Date: _____ Cost Center: '138-1403 WO#:

CHECK	INITIAL	CONDITION AND REPAIRS MADE
Coal Pipe Blast Gate-TEST Run		
Seal		
Telescope Section		
Flange Connections		
Mount Bolts		
Crank Assembly & Cable		
Dou-Nuts & Tip		
Gas Pipe Flex Line Condition		
Quick Connection		
Adjustment Assembly		
Gauges		
lounts		
Pipe Nozzle		

OTHER INFO:

Date Started: Completed:

M.H.'s Inspection: Repair:

Estimated M.H.'s to Repair:

Foreman's Approval:

Sample Inspection Sheet

Subject to change

ARIZONA PORTLAND CEMENT CO.
MAINTENANCE JOB PLAN

Equipment Location (Dept.) Kiln #3—west side	Equipment No. **H3-K3-CM**	Prepared by agq	File No. 18-21
Equipment Description Coal Mill & Blower 2		Approved by	Date Prepared 3/15/02
Description of Work PM Inspection			
	Repetitive Job? Yes No	Job Frequency Reline	

JOB STEP	JOB STEP DESCRIPTION
1.	Lock out.
2.	Remove shell doors & make interior inspection.
3.	Do exterior check list.
4.	Leave in normal running condition after required work & PM inspection are completed.

QTY.	MATERIAL REQUIRED	QTY.	SPECIAL TOOLS REQUIRED
		1	Tool kit
		2	Safety locks
		1	Light

		H3-K3-Coal Mill PM Sheet Page 2
Balance Fan		
Misc. Equipment Handrails & Ladder		**Sample Inspection Sheet**
Guards		Subject to change
Condition of Fire Extinguishers in Area		

OTHER INFO:

Date Started: Completed:

M.H.'s Inspection: Repair:

Estimated M.H.'s to Repair:

Foreman's Approval:

Sample Inspection Sheet

Subject to change

ARIZONA PORTLAND CEMENT CO.
MAINTENANCE JOB PLAN

Equipment Location (Dept.)	Equipment No.	Prepared by	File No.
Kiln4: Burner Floor		agq	9c
Equipment Description Combination: Coal, Gas Burner Pipe	**H3-K4-CB**	Approved by	Date Prepared 3/15/02
Description of Work PM Inspection			
	Repetitive Job?. Yes No	Job Frequency	

JOB STEP	JOB STEP DESCRIPTION
	Inspection to be performed during Reline after burner pipe has been pulled back. Perform inspection check list.

QTY.	MATERIAL REQUIRED	QTY.	SPECIAL TOOLS REQUIRED

Sample Inspection Sheet

Subject to change

H3-K4-CB INSPECTION REPORT
ARIZONA PORTLAND CEMENT CO. AREA 9C

›pairmen: _____ Date: _____ Cost Center: '138-1404 WO#:

CHECK	INITIAL	CONDITION AND REPAIRS MADE
Coal Pipe: check rubber pipe for wear. Check steel piping for signs of wear.		
Gas Pipe: Check condition of steel flex line and mounting flanges.		
Feed Air: Check large flex rubber line and connections.		
Nozzle Condition		
Refractory Condition		
Trolley Assy: Check for freedom of travel, condition of wheels, gearbox, chain.		

OTHER INFO: _____

Date Started: Completed:

M.H.'s Inspection: Repair:

Estimated M.H.'s to Repair:

Foreman's Approval:

Sample Inspection Sheet

Subject to change

ARIZONA PORTLAND CEMENT CO.
MAINTENANCE JOB PLAN

Equipment Location (Dept.)	Equipment No.	Prepared by	File No.
H4 Tower 3 ½ floor near shenick scale		agq	
Equipment Description Tower Coal Burner #1	**H4-PBC1**	Approved by	Date Prepared 3/15/02
Description of Work PM Inspection			
	Repetitive Job? Yes No	Job Frequency Reline	

JOB STEP	JOB STEP DESCRIPTION
1.	Call Central Control Room and give them the names of personnel working on the tipping valve
2.	Complete the check list.
3.	All tip repairs should be completed before burner is reassembled.

QTY.	MATERIAL REQUIRED	QTY.	SPECIAL TOOLS REQUIRED

Sample Inspection Sheet

Subject to change

H4-PBC1 **3-1/2floor by sheneck scale**

Tower coal burner #1 INSPECTION REPORT

ARIZONA PORTLAND CEMENT CO. AREA 9

epairmen: _____ Date: _____ Cost Center: '138-1403 WO#:

CHECK	INITIAL	CONDITION AND REPAIRS MADE
Coal Pipe		
Seal		
Flange Connections		
Mount Bolts		
Tip of Burner Pipe		

OTHER INFO:

Date Started: Completed:

M.H.'s Inspection: Repair:

Estimated M.H.'s to Repair:

Foreman's Approval:

Sample Inspection Sheet

Subject to change

ARIZONA PORTLAND CEMENT CO.
MAINTENANCE JOB PLAN

Equipment Location (Dept.)	Equipment No.	Prepared by	File No.
H4 Tower 3 ½ floor near North Side		agq	9
Equipment Description Tower Coal Burner #2	**H4-PBC2**	Approved by	Date Prepared 3/15/02
Description of Work PM Inspection			
	Repetitive Job? Yes No	Job Frequency Reline	

JOB STEP	JOB STEP DESCRIPTION
1.	Call Central Control Room and give them the names of personnel working on the tipping valve
2.	Complete the check list.
3.	All tip repairs should be completed before burner is reassembled.

QTY.	MATERIAL REQUIRED	QTY.	SPECIAL TOOLS REQUIRED

Sample Inspection Sheet

H4-PBC2 3-1/2 floor on north side

Subject to change

Tower coal burner #2 INSPECTION REPORT

ARIZONA PORTLAND CEMENT CO. AREA 9

:pairmen: _____ Date: _____ Cost Center: '138-1403 WO#:

CHECK	INITIAL	CONDITION AND REPAIRS MADE
Coal Pipe		
Seal		
Flange Connections		
Mount Bolts		
Tip of Burner Pipe		

OTHER INFO:

Date Started: Completed:

M.H.'s Inspection: Repair:

Estimated M.H.'s to Repair:

Foreman's Approval:

Sample Inspection Sheet

Subject to change

ARIZONA PORTLAND CEMENT CO.
MAINTENANCE JOB PLAN

Equipment Location (Dept)	Equipment Name	Prepared by	File No.
Coal Line to tower splitter box above Recoup Damper		agq	9C
Equipment Description	**H3-K4-SPB1**	Approved by	Date Prepared
Riffle Splitter Box			

Description of Work		
PM Inspection		
	Repetitive Job? Yes No	Job Frequency

JOB STEP	JOB STEP DESCRIPTION
1	Notify & Place WORK Tag Central Control. Lock out Fister Coal Scale Blower to Tower.
2	Leave Unit in Running Condition after Required Work & inspection is Completed.

QTY.	MATERIAL REQUIRED	QTY.	SPECIAL TOOLS REQUIRED
			Tool Kit Flash Light Safety Locks

Sample Inspection Sheet

Subject to change

H3-K4- SPB1 INSPECTION REPORT
ARIZONA PORTLAND CEMENT CO. AREA 9C

Repairmen: _____ Date: _____ Cost Center: '138-1404 WO#:

CHECK	INITIAL	CONDITION AND REPAIRS MADE
Open Top of the Box and check for wear.		
Check for leaks at flanges		

OTHER INFO:

Date Started: Completed:

M.H.'s Inspection: Repair:

Estimated M.H.'s to Repair:

Foreman's Approval:

04/27/2007 Job Ticket VFRAZIER

Order	1012430	H3-K4-CM INSPECT WHILE KILN IS DOWN		
Funct. location	*C3-H3-4*		Rillito Kiln #4 Proper	
Equipment	*C3-H3K4CM*	H3-K4-CM		
Assembly				
PM planner grp	*010*	*Mech. Maint. Plng.*	*PM plant*	*116C*
Main work cntr	*81160144* 116C	Kiln #4		

H3-K4-CM INSPECT WHILE KILN IS DOWN
4/27/07 REPLACED ONE BAD ROLL. PACHECO/EBY/HOUY

Operation	0010	H3-K4-CM INSPECT WHILE KILN IS DOWN
Status	PCNF PRT REL	

H3-K4-CM INSPECT WHILE KILN IS DOWN
THE SCRAPERS ARE GONE AND WE NEED TO CHANGE OUT THE SOUTHWEST ROLL

Material	60012228	1	EA	
	ANGLE,RESTRICTION,RAYMOND RO-224 K4-CM			
Qty on hand	11.000	*Bin Location*	P06A06B02	

04/27/2007 Notification Overview VFRAZIER

End of report

Notification	70001147		*Notification type*	M1
Description	H3-K4-CM INSPECT WHILE KILN IS DOWN			Maintenance Request
Reporter	FRAZIER	13:14:39	*Notification date*	04/27/2007
Start date	04/27/2007		*End date*	
Start time	13:14:39		*End time*	00:00:00
Priority	PM			
Funct. location	C3-H3-4		Rillito Kiln #4 Proper	
Equipment	C3-H3K4CM	H3-K4-CM		
Assembly				
Order	1012430			
PM planner grp	010	Mech. Maint. Plng.	*Phone*	

End of report

Functional loc. C3 Valid From 03/10/08
Description Rillito

- C3-H3K4ANALCU1
  H3-K4-ANAL-CU1
- C3-H3K4AXC1WP
  H3-K4-AXC1-WP
- C3-H3K4AXCBL1
  H3-K4-AXC-BL1
- C3-H3K4BA1
  H3-K4-BA1
- C3-H3K4BC1
  H3-K4-BC1
- C3-H3K4BE1
  H3-K4-BE1
- C3-H3K4BL1
  H3-K4-BL1
- C3-H3K4BL2
  H3-K4-BL2
- C3-H3K4BL3
  H3-K4-BL3
- C3-H3K4BL3A
  H3-K4-BL3A
- C3-H3K4BL4
  H3-K4-BL4
- C3-H3K4BS1
  H3-K4-BS1
- C3-H3K4CB
  H3-K4-CB
- C3-H3K4CM
  H3-K4-CM
  - 60002587
    WASHER,CORK SEAL,RAYMOND MP-5319
    L 1 EA
  - 60002596
    BLADE,FEED ROLL,RAYMOND RE-648 K4-CM
    L 1 EA
  - 60002603
    GASKET SET,WORM SHAFT,RAYMOND RB-1598
    L 1 EA
  - 60002696
    GEAR,P/N RD-410-A,K4 CM
    L 1 EA
  - 60002759
    BOLT,LINER,FLAT HEAD CNTSNK,5/8"X3"
    L 1 EA
  - 60002848
    THERMOMETER,MCMASTER-CARR 9863T854 3.5"
    L 1 EA
  - 60002939

Functional loc. C3 **Valid From** 03/10/08
Description Rillito

PCB,DIGITALOUTPUT,FORNEY34826601,ECS1200
L 1 EA
[redacted]
TC,C4J4-R18-W3,J TYPE,18"X1/4"
L 1 EA
[redacted]
TRANSM,DC/DC,MIGHTY MOD MM4380A-1,115VAC
L 1 EA
[redacted]
RELAY,MTR MNGMNT,GE MLTILN 469-P5-HI-A20
L 1 EA
[redacted]
TC,IS-H-11K-C12-18,W/3/4" BUSHING WELDED
L 1 EA
[redacted]
CO PROBE ASSY,COMPLETE,KVB 70100-20"
L 1 EA
[redacted]
LOWER SKIRT,RAYMOND 70-129 K4-CM
L 1 EA
[redacted]
KIT,SAMPLE PMP REBUILD,KVB 50001
L 1 EA
[redacted]
CART,POLYPROPYLENE FRL,12230 TI-CC-INST.
L 1 EA
[redacted]
ROD,STABILIZER,RAYMOND TSE-180 K4-CM
L 1 EA
[redacted]
BOLT,TENSION,ALL THREAD,RAYMOND RW-846-B
L 1 EA
[redacted]
WASHER,OUTER AIR SEAL,RAYMOND RD-200
L 1 EA
[redacted]
WASHER,INNER AIR SEAL,RAYMOND RD-201
L 1 EA
[redacted]
MOT,450HP,900RPM,4160V,3PH,60HZ H3-K4-CM
L 1 EA
[redacted]
LOCK-NUT,RD-210,ABB DRW 5-RD-403-14,
L 1 EA
[redacted]
TC,TYPEJ,IS-H-14J-I-12-24,W/3/4" BUSHING
L 1 EA
[redacted]
FILTER, TIP, CEMTEK #74-70038-P, SMOOTH
L 1 EA
[redacted]
THERMOWELL ASSY,K TYPE,16C32-12 K,A3245
L 1 EA
[redacted]
THERMOWELL ASSY,K TYPE,16C32-22 K,A3245
L 1 EA
[redacted]
IN LIT ASY,GE CR2940UE212A3,240V,60HZ BL
L 1 EA
[redacted]
BELT,DRIVE,POLY CH,14MGT-3136-37 GT214MM
L 1 EA

Functional loc. C3 **Valid From** 03/10/08
Description Rillito

600011665
GASKET,OIL COOLER HEAD,RAYMOND 52-192
L 1 EA

600011666
SEALANT,LOCTITE GASKET ELIMINATOR 51531
L 1 EA

600011667
GASKET (OIL CLER HD),RAYMOND RD-202-A
L 1 EA

600011668
GASKET (PMP HSNG COVER),RAYMOND RD-268-A
L 1 EA

600011669
GASKET, THR BRG HSG & CAP,RAYMOND RD-354
L 1 EA

600011679
GASKET,FIX & FLOAT END,RAYMOND 52-193-A
L 1 EA

600011683
GASKET,INSPECTION COVER,RAYMOND RD-112-A
L 1 EA

600011940
ADAPTER,MP-5371 J SPRING BRG K4 CM
L 1 EA

600011965
COV ASY W/SEAL KIT,FALK 1100T10 K1,2,3CM
L 1 EA

600011968
COVER,UPPER J HSNG,RAYMOND RD-175 K4-CM
L 1 EA

600011994
GUARD,SCRAPER,RAYMOND GP-3477 K4-CM
L 1 EA

600012006
BRACKET,SCRAPER GUARD,RAYMOND GP-3730-PC
L 1 EA

600012007
BRACKET,SIDE DEFLECTOR,RAYMOND RD-147
L 1 EA

600012206
SCRAPER HOLDER,RAYMOND GP-2695-A K4-CM
L 1 EA

600012222
LINER,BOWL WEAR PLATE,RAYMOND RU-343
L 1 SET

600012223
LINER,UPPER M.S.,RAYMOND RU-473 K4-CM
L 1 EA

600012224
LINER,UPPER M.S.,RAYMOND RU-453 K4-CM
L 1 EA

600012225
LINER,UPPER M.S.,RAYMOND RU-454 K4-CM
L 1 EA

600012226
LINER,UPPER M.S.,RAYMOND RU-472 K4-CM
L 1 EA

600012227
DEFLECTOR,MILL,RAYMOND RD-426 K4-CM
L 1 EA

600012228
ANGLE,RESTRICTION,RAYMOND RO-224 K4-CM

L 1 EA
600122229
LINER,SS LEG,RAYMOND RU-467 K4-CM
L 1 EA
600122230
LINER,SS LEG,RAYMOND RU-471 K4-CM
L 1 EA
600122231
LINER,LEG,RAYMOND RU-475 K4-CM
L 1 EA
600122232
LINER,LEG,RAYMOND RU-474 K4-CM
L 1 EA
600122233
LINER, BULL RING UNRIBBED GP-4184-L
L 1 EA
600122234
LINER,BOWL EXTEN,RAYMOND GP-9003-D K4-CM
L 1 EA
600122235
LINER,LOWER M.S.,RAYMOND RU-316 K4-CM
L 1 EA
600122236
LINER,LOWER M.S.,RAYMOND RU-317 K4-CM
L 1 EA
600122237
LINER,LOWER M.S.,RAYMOND RU-430 K4-CM
L 1 EA
600122238
LINER,INTERMED M.S.,RAYMOND RU-319 K4-CM
L 1 EA
600122239
LINER,BOTTOM M.S.,RAYMOND RU-331 K4-CM
L 1 EA
600122240
LINER,BOTTOM M.S.,RAYMOND RU-332 K4-CM
L 1 EA
600122241
LINER,BOTTOM M.S.,RAYMOND RU-330 K4-CM
L 1 EA
600122242
LINER,BOTTOM M.S.,RAYMOND RU-507 K4-CM
L 1 EA
600122268
LINER,ROLL FEED,RAYMOND RJ-506 K4-CM
L 1 EA
600122269
LINER,EX-3037 CASING BRG SIDE CM 4
L 1 EA
600122300
FAN BLADE,EX-3269-A CM 4
L 1 EA
600122307
BLADE,RAYMOND MP-9823 K4-CM
L 1 EA
600122322
PIN,MP-8683-D GROOVE K4 CM
L 1 EA
600122323
PIN,SCRAPER,RAYMOND GP-1214 K4-CM
L 1 EA
600122338

PIN,SHEAR,3/8"X3/8"X2-1/8" K4 CM
L 1 EA

60012369
SHIM SET,RD-183-T (J HSNGS) 4 CM
L 1 SET

60012370
SHIMS (KEEPER),RAYMOND RD-184T K4-CM
L 1 SET

60012371
SHIMS, VERT SHAFT & OIL PUMP RD-315
L 1 EA

60012372
SHIMS (PMP HSG/PMP COVER),RAYMOND
L 1 EA

60012412
ROLL,OVERLAID,RAYMOND RU-492-A K4-CM
L 1 EA

60012429
SPRING, RB-156 JOURNAL COAL MILLS
L 1 EA

60012430
SPRING, RT-852 JOURNAL COAL MILLS
L 1 EA

60012441
SPRING,MP-7743 THRUST BRG CM 4
L 1 EA

60012449
SCRAPER,RAYMOND RW-1262 K4-CM
L 1 EA

60012461
KEY,MP-5563-CG FAN SPIDER CM 4
L 1 EA

60012463
FILER,RESTRICT ANGLE,RAYMOND RO-65 K4-CM
L 1 EA

60012519
PACKING GLAND,RAYMOND RJ-516 K4-CM
L 1 EA

60012593
BOLT,FLTHD LINER,CNTSNK,5/8"-11X2.5"
L 1 EA

60012630
SHIMS THRUST BRG HSNG RAYMOND MP-10234-T
L 1 SET

60012783
SEAL ASSY,AIR,RAYMOND RD-211 K4-CM
L 1 EA

60012784
SEAL,OIL,RAYMOND MP-7934 K4-CM
L 1 EA

60012785
SEAL,OIL,MP-7133 713 MILL
L 1 EA

60012810
LOCKNUT,ROLL,RAYMOND RD-177,W/SET SCREWS
L 1 EA

60012842
SPKT,GATES14MX-140S-37-3525-GT2 H3-K4-CM
L 1 EA

60012843
SPKT,TIMING,GATES 14MX-36S-37-2517-GT2
L 1 EA

Functional loc. C3 Valid From 03/10/08
Description Rillito

60012852
SEAL WASHER,RAYMOND MP-7454-A K1,2,3 CMS
L 1 EA

60012893
RING,PACKING,RAYMOND GP-3094-D K4-CM
L 1 EA

60012897
HSNG,THRUST BRG,RAYMOND RB-105 K4-CM
L 1 EA

60012904
CAP,PTCP 40V BRONZE,4" PADDLE CAM ARM
L 1 EA

60012907
CAP,THRUST BRG HSNG RD-106 CM 4
L 1 EA

60012975
BRG,SPHERICAL THRUST,RAYMOND GP-829
L 1 EA

60012982
BRG,THRUST,TORRINGTON 29434-W18(NO SUBS)
L 1 EA

60012983
BRG,RLR,SKF NU-330-ECM K4-CM
L 1 EA

60012984
BRG ASSY,TIMKEN H238110 CUPH238148 CONE
L 1 EA

60012985
BRG ,TMKN HH234010 CUP , HH234048 CONE
L 1 EA

60012986
BRG ASSY.,TORRINGTON HJ445628/IR354428
L 1 EA

60012987
BRG,RLR,ROLLWAY E5248UMR K4-CM
L 1 EA

60013033
BUSHING,RD-121 OIL PMP RAYMOND CM K4
L 1 EA

60013034
BUSHING,TRUNION,RAYMOND MP7311-E K4-CM
L 1 EA

60013092
WORM,P/N RD-411-B,FOR K4 CM
L 1 EA

60013306
BRG,CYLINDRICAL RLR,RAYMOND MP-5742
L 1 EA

60010908
TRANSFORMER,3 KVA9T24Y201G7 GE 2300/230V
L 1 EA

60011357
TONE MODULE,FEDERAL TM-8 OR UNIVERSAL
L 1 EA

60011356
ALARM,FEDERAL SELECTONE MODEL 300-GC
L 1 EA

C3-H3K4CMBL1
H3-K4-CM-BL1

C3-H3K4CMCC
H3-K4-CM-CC

Functional loc. C3 Valid From 03/10/08
Description Rillito

- C3-H3K4CMDO
  H3-K4-CM-DO
- C3-H3K4CMMTR1
  H3-K4-CM-MTR1
- C3-H3K4CMRF
  H3-K4-CM-RF
- C3-H3K4CMSB
  H3-K4-CM-SB
- C3-H3K4CMSR1
  H3-K4-CM-SR1
- C3-H3K4CMSS
  H3-K4-CM-SS
- C3-H3K4D
  H3-K4-D
- C3-H3K4DC1
  H3-K4-DC1
- C3-H3K4DC2
  H3-K4-DC2
- C3-H3K4DPO
  H3-K4-D-PO
- C3-H3K4EH1
  Coal Tower Hoist (2 ton)
- C3-H3K4FL
  H3-K4-FL
- C3-H3K4FL2
  H3-K4-FL2
- C3-H3K4GV
  H3-K4-GV
- C3-H3K4HOP
  H3-K4-HOP
- C3-H3K4INST
  H3-K4-INST
- C3-H3K4K
  H3-K4-K
- C3-H3K4KSS1
  H3-K4-KSS1
- C3-H3K4KSS2
  H3-K4-KSS2
- C3-H3K4ML
  H3-K4-ML
- C3-H3K4PU1
  H3-K4-PU1
- C3-H3K4RF2
  H3-K4-RF2

Confirmation Edit Goto Environment System Help

SAP

Display PM Order Confirmation: Confirmation Overview

Order 1012430 H3-K4-CM INSPECT WHILE KILN IS DOWN

Confirmations for Operations and Suboperations

Op.	Sub	Ty	Spl	Conf.	F	C	Pstg Dt.	Work Ctr	Act. Work	Un	ATy	Description	Ty.	Actual start	Act.fins
0010												H3-K4-CM INSPECT WHILE KILN IS DOWN		04/27/2007	11/07/2
				1			04/30/07	81160144	0.00	HR		4/27 REPLACED 1 ROLL. PACHECO/EBY/HO			
				2			11/07/07	81160144	0.00	HR		11/6 ADJUSTED ROLLS, CHANGED SCRAPE			
				3			10/31/07	81160144	8.0	***	RIST02				
				4			10/31/07	81160144	8.0	***	RIST02				

IW43 gap01 INS

SAMPLE INSPECTION SHEET

Arizona Portland Cement Co. Annual Combustion System Operation Inspection Sheet.

Name	Description	Date Inspected	Inspected By:	Inspection Results:
	Inspect for system leaks or problems that can effect the combustion process			
H3-K1-BA1	Bin Activator			
H3-K1-BS1	Beltscale			
H3-K1-CB	Combination Burner			
H3-K1-CM (493)	Coal Mill - Includes Coal Mill Fan			
H3-K1-CM-CC	Hot Air Duct Cyclone			
H3-K1-CM-RF	Coal Mill Rotary Feeder			
H3-K2-BA1	Bin Activator			
H3-K2-CB	Comb. Burner			
H3-K2-CM (493)	Coal Mill - Includes Coal Mill Fan			
H3-K2-CM-CC	Hot Air Duct Cyclone			
H3-K2-CM-RF	Coal Mill Rotary Feeder			
H3-K3-BA1	Bin Activator			
H3-K3-BS1	Beltscale			
H3-K3-CB	Combination Burner			
H3-K3-CM	Coal Mill - Includes Coal Mill Fan			
H3-K3-CM-CC	Hot Air Duct Cyclone			
H3-K3-CM-RF	Coal Mill Rotary Feeder			
H3-K4-BL2	1100 SCFM Blower			
H3-K4-BL3	Primary Air Blower Spencer Blower			
H3-K4-BL3A & 3B	Auxiliary Primary Air Blowers			
H3-K4-BL4	1600 SCFM Blower			
H3-K4-CB	Combination Burner			
H3-K4-CM-CC	Cyclone Collector			
H3-K4-CM-DO	Coal Mill Damper Operator			
H3-K4-WF1	Pfister Rotary Scale			
H3-K4-WF2	Pfister Rotary Scale			
H4 Coal Hoses	H4 Tower coal hoses from coal line to tower coal burners - located on H4 tower			
H4 Coal Line	H4 Coal line from tower Pfister to tower			
H4 Coal Wiffle Splitter	H4 Coal Splitter - located on tower			
H4 Tower Gas Control Valve	H4 Tower Gas Control Valve - located on K4 burner floor			
H4 Tower Gas Hose	H4 gas hose between H4 gas line and H4 gas burner			
H4 Tower Gas Line	Gas line from burner floor to tower			
H4 Tower Gas Maxxon	H4 Tower gas Maxxon valve - located on K4 burner floor			
H4 Tower oil line	Oil Line from oil pump to tower			
H4-PBC1	Tower Coal Burner #1			
H4-PBC2	Tower Coal Burner #2			

Name	Description	Date Inspected	Inspected By:	Inspection Results:
H4-PBG1	Tower Gas Burner #1			
H4-POB1	Tower Oil Burner #1			
H4-POB2	Tower Oil Burner #2			
K1 Coal Line	K1 coal line from H3-K1-CM to Coal Burner			
K1 Gas Burner Pipe	Kiln 1 gas burner pipe			
K1 Gas Control Valve	Kiln 1 gas Control Valve - located on old kiln burner floor			
K1 Gas Hose	Kiln 1 gas hose between Kiln 1 gas line and Kiln 1 gas burner			
K1 Gas Line	Kiln 1 Gas line on old kiln burner floor			
K1 Gas Maxxon	Kiln 1 gas Maxxon Valve - located on old kiln burner floor			
K2 Coal Line	K1 coal line from H3-K1-CM to Coal Burner			
K2 Gas Burner Pipe	Kiln 2 gas burner pipe			
K2 Gas Control Valve	Kiln 2 gas Control Valve - located on old kiln burner floor			
K2 Gas Hose	Kiln 2 gas hose between Kiln 2 gas line and Kiln 2 gas burner			
K2 Gas Line	Kiln 2 Gas line on old kiln burner floor			
K2 Gas Maxxon	Kiln 2 gas Maxxon Valve - located on old kiln burner floor			
K3 Coal Line	K1 coal line from H3-K1-CM to Coal Burner			
K3 Gas Burner Pipe	Kiln 3 gas burner pipe			
K3 Gas Control Valve	Kiln 3 gas Control Valve - located on old kiln burner floor			
K3 Gas Hose	Kiln 3 gas hose between Kiln 3 gas line and Kiln 3 gas burner			
K3 Gas Line	Kiln 3 Gas line on old kiln burner floor			
K3 Gas Maxxon	Kiln 3 gas Maxxon Valve - located on old kiln burner floor			
K4 Coal Hose	Kiln 4 coal hose from Kiln 4 coal line to combination burner - located on K4 burner floor			
K4 Coal Line	Kiln 4 coal line from Pfister scale to burner floor			
K4 Gas Control Valve	Kiln 4 Gas Control Valve - located on K4 burner floor			
K4 Gas Hose	Kiln 4 gas hose between gas line and combination burner - on K4 burner floor			
K4 Gas Line	K4 gas line on K4 burner floor			
K4 Gas Maxxon	Kiln 4 gas Maxxon valve - located on K4 burner floor			
K4 Primary Air Hose	Kiln 4 primary air hose from Primary air line to combination burner - located on K4 burner floor			
K4 Primary Air Line	Kiln 4 primary air line from H3-K4-BL3 to burner floor			
R4-PO1	Used oil pump for H4 tower			
H3-K4-SCF1	Solid Fuel Hopper Screw Feeder			
H3-K4-BE1	Solid Fuel Elevator			
H3-K4-BE1 - Disch chute and dump valve	Solid Fuel Elevator discharge chute and dump valve			
H3-K4-BC1	Belt Conveyor from solid fuel hopper to elevator			

Attachment 5

Indirect Coal Firing System "Safety and Maintenance Procedure Information" Manual for Kiln 4

Attachment 5

INTRODUCTION TO COAL FIRING SYSTEM

Following is a list describing specific equipment associated with the Indirect Coal Firing System, those that are related to safety are printed in *italics.*

GROUND CONTINUITY STRAPS

All piping and mechanical equipment in contact with pulverized coal are connected with copper ground straps to ensure electrical continuity across flanged connections. A build-up of electrical charge can cause an explosion. See illustration #1.

CARBON DIOXIDE SYSTEM

Thirty-six cylinders, each containing 50# of liquid CO_2, are connected to a manifold. The manifold is divided into three sections: an area on one end where 18 cylinders are connected, a central zone where 5 discharge lines are connected, and an area on the other end where 18 cylinders are connected. The central zone can be isolated from the end areas by valves so one group of 18 cylinders can be used as "ready" and the other can be held as "reserve." Since CO_2 is under about 800 psi pressure in the cylinders, all piping, valves and hoses used for this system must be properly selected; any repairs or additions to this system must be performed with the knowledge and approval of the Engineering Department. In compliance with the plant color code, this piping is painted red. Thirty-six additional cylinders were purchased and are to be kept filled for replacement of any ones used for inerting; a storage rack for these cylinders is installed in the brick shed. See drawing 40-H3-M75.

AIR SYSTEM

Plant air is piped to all floors of the structure for use as required for operating process equipment and maintenance tools. It is not to be used for cleaning the area or equipment; MSHA prohibits the use of compressed air for cleaning due the possibility of explosion. In compliance with the plant color code, this piping is painted green.

WATER SYSTEM

Plant water is piped to all floors of the structure for use as required for cleaning up the area or process equipment. Due to the potential of freezing in the winter, a dry-pipe system has been installed. Also, due to the height of the structure, a booster pump similar to the one on the preheater is required. When water is required on the structure, it will be necessary to switch the 3-way valve at the booster pump from the "drain" position to the "operate" position (red valve handle pointing towards the pump); this allows water to enter the piping. When water is no longer needed on the structure, the 3-way valve should be returned to the "drain" position (red valve pointing towards the drain). This will open the vacuum breaker at the top of the structure and allow the piping to drain. The pump is controlled by a pressure switch and will stop and start automatically. In compliance with the plant color code, this piping is painted white.

COAL BIN ACTIVATOR H3-K4-BA1

The same bin activator used before conversion from direct to indirect firing is used to feed the belt scale. A new discharge cone section with a single outlet connection has been installed; this is constructed of stainless steel for corrosion protection and better material flowability.

BELT SCALE H3-K4-BS1

The same belt scale used before conversion from direct to indirect firing is used to feed the coal mill. The coal feed rate to the mill is controlled by the total weight of pulverized coal in the two coal surge bins; the total set-point is about 8 tons.

COAL MILL H3-K4-CM

The Raymond 713 mill is unchanged from what it was when used for direct firing, except that the pulverized coal is now removed from the air flow in dust collectors prior to going to the exhauster. Mill airflow will be measured by a sensor and controlled by a new electric actuator on the existing exhauster inlet damper.

EXPLOSION VENT

At the top of the duct from the coal mill to the dust collectors, a weighted flap is installed to vent excessive pressures if an explosion should occur. In order to seal this flap, a ring of packing contacts a machined edge of the flap; the condition of this packing should be inspected periodically when the system is down. See drawings 40-H3-G17 and 40-H3-M81.

VENTILATION SYSTEM

For periods of time when the coal mill in not in operation, an auxiliary ventilation fan is installed on the 5th level to maintain air flow through the coal mill system. This air flow is needed to remove any combustible gases which may be released by the coal. See illustration #5.

EXPANSION JOINTS

Most of the piping and duct work in this system is connected with flexible expansion joints to accommodate thermal growth, vibration and to isolate bins on load cells. Many of these have steel "flow liners" inside to keep material out of the joint and to prevent wear of the joint; if possible, these should be inspected for wear when the system is down. The convolution or "hump" of these joints is packed with Koawool to prevent accumulation of coal dust, this should be replaced when the flow liner is removed or replaced.

DUST COLLECTORS H3-K4-DC1 & DC2

There are two dust collectors, each has 221 bags (4.5" diameter x 10' long). The inlet pipes are inclined steeply downward from the coal mill discharge duct and the conical hoppers have a 70° slope to prevent build-up of pulverized coal. Access for bag changing is from the top, after removing the top of the collector. Because space is limited on the top level of the structure, the top from one collector will be stored on top of the other collector during maintenance. A bag-catching grid is mounted above the hopper outlets to prevent jamming of the rotary feeder (if a bag or cage should fall). Two rupture discs are installed just above the conical hopper in each collector. Bags are cleaned by the typical pulse-jet method found on most collectors in the plant, but timing is controlled by a programmable logic controller.

SERVICE HOIST

A one ton electric chain hoist with 110 feet of lift is mounted on a jib on the 7th level of the coal firing system structure. This hoist can be used to handle the dust collector tops as well as other materials required for maintenance. The hoist has two hoisting speeds and a motorized trolley. It should be left "tied down" to one of the dust collector tops when not in use.

TRIBOFLOW DETECTORS

Three particulate detectors are mounted to monitor performance of the dust collectors; one at each collector outlet and one downstream, after both outlet ducts have joined together. These detectors measure airborne particulate levels and can be used to alarm broken bags as well as indicating collector performance.

ROTARY FEEDERS

H3-K4-DC1 & DC2-RF

H3-K4-RF1 & RF2

Four rotary feeders serve as air locks and "fire stops" between the dust collectors, screw conveyor and the pulverized coal surge bins. The feeders have stainless steel rotors with adjustable blade tips.

SCREW CONVEYOR H3-K4-SC1

A tubular, reversing screw conveyor is installed under the dust collectors and above the two pulverized coal surge bins. This conveyor is controlled by the amount of pulverized coal in each coal surge bin, as monitored by load cells; the computer is programmed to maintain approximately the same weight of coal in each surge bin.

COAL SURGE BINS

Two pulverized coal surge bins are installed on load cells; one is for the kiln burner and one is for the precalciner. Each bin contains approximately a 30 minute supply of fuel. The top of each bin has the following openings: pulverized coal inlet from a rotary feeder, vent to dust collectors, gas analyzer probe, rotary bindicator, and a rupture disc (which can also serve as a manhole). Nozzles for aeration and CO_2 inerting are located around the cone of the bins; air to these jets is controlled in a spiral sequence by a programmable logic controller (this aeration must continue during operation to keep the CO_2 nozzles open). One small handhole opening is located near the bin cone outlet and a 20" diameter knife gate valve is mounted on the cone outlet flange.

INERT MATERIAL BIN

One bin is installed for storage of inert dust (raw meal or waste kiln dust) to be used for inerting the coal mill system. The bin has a capacity of approximately 10 tons. Dust is conveyed from a pneumatic truck to the bin through a 4" pipe. The bin is vented to the dust collectors so the coal mill or the ventilation fan must be operating during filling. The bin is equipped with a steep-slope, chisel-shape hopper to minimize plugging or bridging and aeration pads are installed to assist flow. These pads are automatically activated when the feeder is on. A screw feeder (H3-K4-SC2) is used to withdraw the inert dust and meter it to the coal mill inlet. An air-actuated flap is installed on the end of the tubular discharge section of the screw to prevent flushing; this flap is automatically opened when the screw drive is energized. See drawings 40-H3-M71 and 40-H3-M72.

RUPTURE DISCS

Although this coal firing system has been designed to avoid the causes of fires and explosions, rupture discs are installed in the dust collectors and pulverized coal surge bins to relieve the pressure of any explosion which may occur. These discs are precision devices, manufactured to rupture (break open) at a certain pressure level - 2 psi in the collectors and 10 psi in the surge bins. Because they rupture to protect the equipment from excessive pressure, they are not reusable. Venting an explosion through a rupture disc causes discharge of a high velocity stream of hot and burning material; for this reason, access around these discs is restricted. The 6th level of the coal firing system structure is "off limits" during operations because the dust collector rupture discs are there. Ducting is provided over the pulverized coal surge bins' rupture discs to direct the discharge out of the structure. See illustration #9.

LOAD CELLS & BINDICATOR

The pulverized coal surge bins are mounted on load cells, which monitor the weight of coal in each bin. This information is sent to the Forney process control computer, which then directs the coal belt scale and the reversing screw conveyor. In addition to the load cells, a paddle-type bindicator is located in the top of each coal surge bin as a back-up device to prevent overfilling the bin if the load cell signal fails to do so.

KNIFE GATE VALVES

H3-K4-VX1 & VX2 & VX3

H3-K4-WF1 & WF2-VX

As a means of isolation and plug-up prevention, knife gate valves are installed on the discharge of the coal surge bins and on the inlet of the Pfister rotor scales. In a planned shut-down, where coal is to be left in the bins, the valve on the surge bin would be closed first, allowing the short pipe feeding the rotor scale to empty. Then the valve on the rotor scale would be closed. An additional knife gate valve is installed in the pulverized coal line to the precalciner for use if the line plugs and must be blown out with air.

ROTOR SCALE FEED SPOOLS

Short pipe spools connect the coal bins with the rotor scales; these are equipped with aeration jets to ensure uniform flow of coal. Air to these jets is controlled in a spiral sequence by a programmable logic controller (this aeration can be used at the operator's discretion to achieve best rotor scale operation).

PFISTER ROTOR SCALES H3-K4-WF1 & WF2

Two rotor scales are installed for metering and conveying the pulverized coal to the kiln burner and the precalciner. The rotor scale receives pulverized coal from the feed spool into a cellular wheel rotating in a horizontal plane. After about 255° of rotation, air from the conveying air blower enters the wheel from the bottom, blows the coal out the top and conveys the coal to the burner through a pipe. On the kiln rotor scale only, part of the conveying air is bypassed to reduce the velocity inside the rotor scale; this bypassed air reenters the conveying line downstream of the rotor scale. A manually adjustable valve controls and amount of air bypassed. A load cell measures the weight of coal in the wheel and a sensor measures the speed of rotation of the wheel; these two signals allow calculation of the feed rate. See illustration #11.

CONVEYING AIR BLOWERS H3-K4-BL2 & BL4

Two rotary lobe-type, positive displacement blowers provide air for conveying pulverized coal to the kiln burner and the precalciner. These are equipped with Donaldson air filters, using the same elements as most of the other blowers and compressors in the plant. In compliance with the plant color code, this air piping is painted green.

COAL PIPING

Pulverized coal is conveyed from the rotor scales to the kiln burner in 8" steel pipe and to the precalciner in 6" steel pipe. Elbows in this piping are cast iron "Hammertek," as used on the D3 cement line. In compliance with the plant color code, this piping is painted black.

ONODA BURNER & CARRIAGE

Number 4 kiln is equipped with an Onoda multi-fuel burner, set up for natural gas and pulverized coal. This burner is mounted on a new trolley structure, supported from the building roof framing. Lateral and vertical angular adjustments can be made from crank wheels and limited axial movement will be possible during operation. Lateral and vertical parallel adjustments can be made by relocating the carriage support rails and by adding or removing spacer blocks in the carriage framing.

PRIMARY AIR BLOWER

A pressure blower is installed to provide primary air to the burner for flame shaping and cooling of non-active passages inside the burner. This blower is equipped with an inlet silencer and a beck operated controlled inlet damper. In compliance with the plant color code, this piping is painted green.

KVB GAS ANALYZER

Since pulverized coal systems have historically experienced fire and explosion problems caused by combustible gases, a multi-channel gas analysis system will monitor CO and O_2 concentrations in the dust collectors, pulverized coal surge bins, coal mill and raw coal bin. This system samples each point automatically, on a rotating basis, and can be programmed to different sampling patterns at the operator's discretion.

INSTRUMENTATION & FORNEY CONTROL

As far as possible, all aspects of coal firing system operation will be monitored and controlled by the Forney computer. Control of process parameters and motor starting is included. Sequences for start/stop of the coal grinding system, kiln rotor scale system, and precalciner rotor scale system have been programmed. In addition, one emergency stop sequence for all coal system equipment and one sequence for inert material feed will be available.

SAFETY PROCEDURES FOR OPERATION AND MAINTENANCE

Following is our original 1990 Safety Procedure, additional notes have been added (in *Bold Italics*) indicating specific things we ave learned from experience.

No smoking is permitted anywhere or at any time within 50 feet of the coal mill or above ground level in the coal firing system structure.

Only explosion-proof "drop lights" are permitted anywhere or at any time above ground level in the coal firing system structure. Eight of these will be permanently mounted in the structure.

Use of air lances for cleaning up coal is prohibited by MSHA.

The 6th level of the coal firing structure is closed to personnel access during operations and must be kept locked. Discharge from the dust collector rupture discs on this level could cause injury. On the 7th level, the enclosure for the explosion vent is closed to personnel access during operations and must be kept locked.

The ventilation system should remain in operation whenever possible when the firing system is down.

The system must be inerted with raw meal (or CO_2, if raw meal inerting is impossible) before maintenance activities start.

Rillito inerts the bins, coal mill, etc... each time the Kiln is shut down.

Before CO_2 gas discharge, make sure all equipment (including the ventilation system) is stopped, all dampers are closed (except that the vents from the coal surge bins to the dust collectors must remain open), and all manholes are closed. If the system has been down, have the area inspected to ensure that no one is in any of the vessels or ducts and that no doors or inspection covers have been removed. Discharge of CO_2 is liquid under approximately 800 psi and is hazardous due to displacement of oxygen (suffocation), rapid vaporization of liquid (freezing of skin), high velocity jet from nozzles (high noise levels and puncture of skin and internal organs).

No heat-generating devices are to be used near the vessels or ducts before or during cleaning of the interior surfaces.

Before opening either dust collector for maintenance, they must be pulsed for at least 30 minutes after coal feed has been stopped.

Double-check temperature and gas analysis for areas to be maintained prior to opening doors. Non-insulated vessels should not be hot to touch and gas analyzer should show less than 95 ppm CO.

Before entering a vessel, two doors should be open for ventilation (the only exception to this is that changing dust collector bags requires removal of the collector top cover only), a light should be used for a visual inspection and a portable gas analyzer should verify that:

CO is less than 50 ppm
CO_2 is less than 0.5%
O_2 is more than 19.5%

NOTE: since CO_2 is heavier than air, check gas concentration in lower part of vessel

Prior to maintenance activities, the company lock-out procedure must be observed.

coal mill	1
pulse air to dust collectors	1
screw conveyor	1
rotary feeders	4
inert material feeder	1
knife gate valves	5
tempering air damper	1
CO_2 discharge valves	5
Pfister rotor scales2	
coal bin activator	1
belt scale & scavenger screw	2

This extensive lockout procedure is used only during kiln relines or complete inspections of the system. Individual components such as the Pfister Scales or Coal Mill can be worked on following standard lockout procedures. However under any circumstance, the <u>CO_2 Systen Manifold</u> must be locked out to avoid accidental discharge of CO_2 Gas or Liquid.

After entering vessels, ducts or the coal mill, but before starting maintenance, clean any coal deposits from all interior surfaces, not just the working area. Use "manual" cleaning methods, such as brooms and dust scoops; any metal items should be non-sparking. Water should not be used. Cleaning should be performed such that coal dust is not made airborne any more than absolutely necessary, since coal/air mixtures are explosive over a wide range of concentrations (between 0.0025 and 0.37 #/ft^3).

When welding anywhere in the coal firing system structure, make a secure ground connection to the item being welded to avoid sparking or excessive heating. Permanent welding leads, both electrode and ground, have been installed in the structure. <u>Do not ground through the structure or piping.</u>

Upon completion of maintenance, the job site should be cleaned up and be inspected by a supervisor for any remaining hot, burning or smoldering material, which may present a fire hazard. Also, any ground straps which were removed for maintenance must be properly reinstalled.

All equipment must be test-run before being released to Production.

Upon starting the coal grinding system after replacement of dust collector bags, the dust collector timer should remain off until the differential pressure reaches 4" H_2O.

Because of the danger of coal dust accumulation inside a damaged dust collector bag, the coal grinding system should be shut down and repaired whenever the triboflow detectors indicate excessive emissions.

COAL FIRING SYSTEM NOTES
AND
OPERATING PROCEDURES

CRITICAL VALUES

coal mill exit temperature

normal	135° F or less (Summer temp. is only 115° F)
maximum	150° F (for nearly all circumstances Rillito keeps below 135° F)
alarm	~~145° F~~ → 137 F
shut down	~~160° F~~ → 152 F 140F Damper action

dust collector exit temperature

alarm	145° F → 140 F
shut down	~~160° F~~

coal temperature in surge bin or dust collector hopper

normal	145° F or less
caution	145° F through 160° F → 140F D.C. 159F for BIN
emergency	~~160° F or more~~

concentration of CO

normal	✓ less than 95 ppm
alarm	✓ ~~120 ppm~~ 150 and 200 PPM

concentration of O_2

normal	✓ more than 19.5%
alarm	✓ 19.5%

PROCEDURES

SCHEDULED KILN SHUTDOWN

shut down coal belt scale, but leave coal mill operating and continue firing in the kiln and precalciner

when both rotor scales indicate lack of feed (this should take about 30 minutes), stop the rotor scales and start the inert material feed sequence; this will feed about 1,000 pounds of material to the coal mill and distribute it to the surge bins

after completion of the inert material feed sequence (about 3 minutes), start the rotor scales and operate them until they again indicate lack of feed

shut down the coal mill, turn on the ventilation fan system, and continue to operate the conveying air blowers, rotor scales, and dust collectors for 30 minutes

shut down all equipment except for the ventilation fan system and continue to operate this system during the shutdown

EMERGENCY KILN SHUTDOWN

if possible, shut down the coal belt scale, grind out the coal mill for 10 minutes, and then shut down coal mill

turn on the ventilation system and operate the rotary feeders, screw conveyor, and dust collector timer for 10 minutes after mill shutdown

continue to operate the ventilation system during the shutdown

If shutdown will extend longer than 3 hours, inert with raw meal, as described below, unless this is impossible. Use CO_2 inerting, as described below, if raw meal inerting is not possible.

Rillito inerts with CO_2 any time the system is shut down.

If shutdown is less than 3 hours, no precautions are necessary unless gas or material temperatures or gas analysis exceeds established alarm values.

If established alarm values are exceeded and CO_2 is available, inert the system with CO_2. The procedure for inerting is:

> Depending on what equipment has shown the alarm condition, the appropriate number of cylinders (see listing below) should be opened into the "ready" manifold and then the proper discharge valve (each valve is tagged to indicate what equipment it inerts) should be opened. If more than one item requires inerting, the total number of cylinders should be opened and then the required discharge valves should be opened together. Pressure gauges have been installed on each seciton of manifold to provide a visual indication when the cylinders have been completely discharged.

The amount of CO_2 necessary for inerting is:

Equipment Name	No. Cylinders	Total
Dust Collector	5 each x 2	10
Surge Bin	2 each x 2	4
Coal Mill	3	3

SPECIAL NOTES REGARDING CO_2 CYLINDERS

When selecting cylinders for CO_2 inerting, observe which manifold is set for "ready" by checking the position of the two 3" valves near the 5 discharge valves. The "ready" manifold will be on the side with the open 3" valve. Select the required number of cylinders from the "ready" manifold (unless there are not enough) and open the cylinder valves and manifold valves in preparation for discharge.

To avoid confusion regarding which cylinders have been discharged and which ones are full, leave the cylinder valves and manifold valves open after discharge. Remaining full cylinders will have their valves closed.

If there are not enough full cylinders in the "ready" manifold, close the 3" valve on the "ready" manifold and open the other 3" valve, making the "reserve" manifold into the "ready" manifold. The manifolds should be rotated to ensure against finding empty cylinders due to slow leakage.

As soon as possible after discharge of CO_2, replace empty cylinders with full ones from the "full" storage rack, located in the brick shed. Return empty cylinders to the "empty" rack in the brick shed. Whenever 18 empty cylinders accumulate in the "empty" rack, they should be sent to a vendor for refill.

We have the Cylinders picked up on a weekly basis, we go through from 4 to 15 cylinders per week.

When replacing an empty cylinder, close the manifold valve and leave the cylinder valve closed, indicating that it is full. The connection between the cylinder valve and the flexible hose to the manifold requires a fiber gasket, which must be replaced each time a cylinder is connected. These gaskets are stocked in Stores in boxes of 100.

If established alarm values are exceeded and CO_2 is not available, inert the system with raw meal. The procedure for raw meal inerting is:

Operate the coal mill system with the coal belt scale off and
start the inert material feed sequence; this will feed about 1,000 pounds of material to the coal mill, coat the dust collector bags and deposit a layer of inert material on top of the coal in the surge bins.

After the inert material feeder has stopped, shut down the coal mill and turn on the ventilation system, but continue to operate the rotary feeders, the screw conveyor and the dust collector timer for 30 minutes.

Shut down all equipment except for ventilation fan system and continue to operate this system during the shutdown.

MECHANICAL SPECIFICATIONS FOR MAJOR EQUIPMENT

`ELT SCALE (existing)
Thayer, 24" belt scale, 20 tons/hr

COAL MILL (existing)
CE-Raymond, Model 713, 450 hp, 15 tons/hr

dust collectors

2 each:	Mikro-Pul #221-10-100TR 2,603 ft^2 cloth area 70° cone, stainless steel

rotary feeders

2 each:	Rotolok 14" size, 1.1 ft^3/rev, 10 rpm 1.5 hp drive
2 each:	Rotolok 18"/14" size, 2.55 ft^3/rev, 18 rpm 3 hp drive

SCREW CONVEYOR
Martin, 16" diameter tube screw, 46 rpm, 1,000 ft^3/hr, 7.5 hp drive

INERT MATERIAL FEEDER (screw conveyor)
Martin, 9" diameter screw with tapered feed section and 15" o.d. paddles, 33 rpm, 550 ft^3/hr, 5 hp drive

rotor scales
2 each: Pfister #DRW 01, 1-10 tons/hr, 10 hp dc drive ← Rotor scales:

1 each Pfister #DRW01
0-10 Ton/hr, 15 hp AC drive

1 each Pfister #DRW4.12
1.35 - 13.50 Ton/hr, 15 hp AC drive

conveying air blowers

precalciner:	Roots #624 RCS-J, 1250 icfm @ 8.5 psi, 1500 rpm, 1:
kiln:	Roots #624 RCS-J, 1750 icfm @ 4.(

primary air blower
~~Buffalo Forge, size 45-4, type R-SWSI, 5228 acfm @ 2.1 psi, 3600 rpm,~~

* Spencer Turbine Co., 6676 ACFM @ 17.84 PSIA, 3500 RPM, 200 HP

* Upgraded in 1992 for more pressure and volume

Maintenance Procedures

1) Changing Cellular Wheel and Sealing Plates
2) Changing the Axial Face Seal
3) Procedure for Checking Gap
4) Dust Collector Maintenance Procedures
5) Job Safety Analysis

Procedure for Changing Sealing Plates and/or Cellular Wheel

)ismantling of the Rotor Casing

1) Disconnect the air piping
2) Electrically disconnect the motor, tachometer and revolution counter

Figure 2

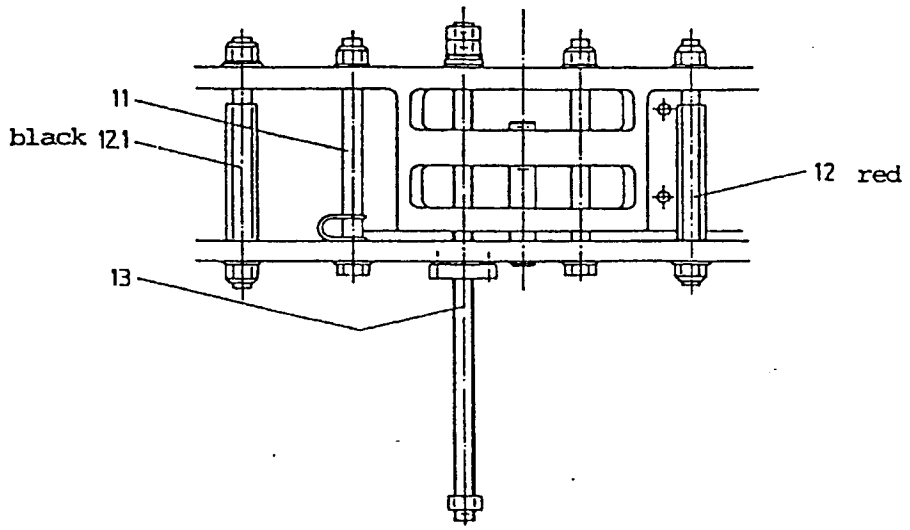

3) Slightly tighten the three mounting spindles (13 on fig. 2)
4) Remove the 15 screws (11 on fig. 2), between the upper and lower sections
5) Lower the bottom section by simultaneous turning of the three mounting spindles
6) Unscrew the nuts of the three adjusting screws (12 0n fig. 2, red color) and the three adjusting screws (12.1 on fig. 2, black color), these are M 24 x 1.5 fine thread bolts both with nuts on both ends

Dismantling of the Cellular Wheel

1) Screw down the mounting bar (25 on fig. 4) in the wheel center (26 on fig. 4)
) Lift the tie bar with the two spindlers (27 on fig. 4)

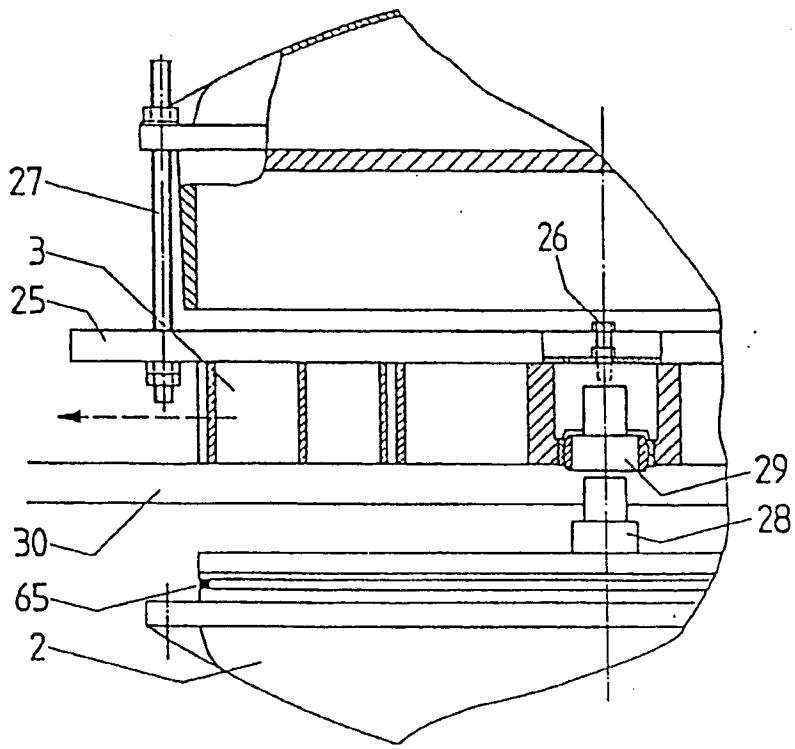

Figure 4

3) Lower the bottom section (2 on fig. 4) until the drive shaft (28 on fig. 4) comes off the spherical joints (29 on fig. 4) in the star wheel
4) Lower the cellular wheel onto two timbers. Detach the tie-bar and pull out the wheel (weight approx. 583 lbs)
5) Wheel can be machined[1] to 0.004" flatness and 0.002" parallel. Rillito has found that the spherical joint may have to be machined on the ends so that its length is less than the thickness of the cellular wheel.
6) Clean and inspect the spherical joint (29 on fig. 4) and replace if necessary, the spherical joint should be kept with a specific cellular wheel to avoid installing an un-machined joint with a machined cellular wheel (this could prevent proper gapping).

1 The minimum thickness that the cellular wheel can be machined to is 121 mm (4.7638").

Axial Face Seal

The Condition of the axial face seal (32.1 on fig. 6) is checked when the rotor is removed. The axial face seal is externally protected by an o-ring (32.2 on fig. 6), 8 springs (32.3 on fig. 6) and held in place with 3 stop screws (32.4 on fig. 6). The ring is secured against twisting with a bolt (32.5 on fig. 6).

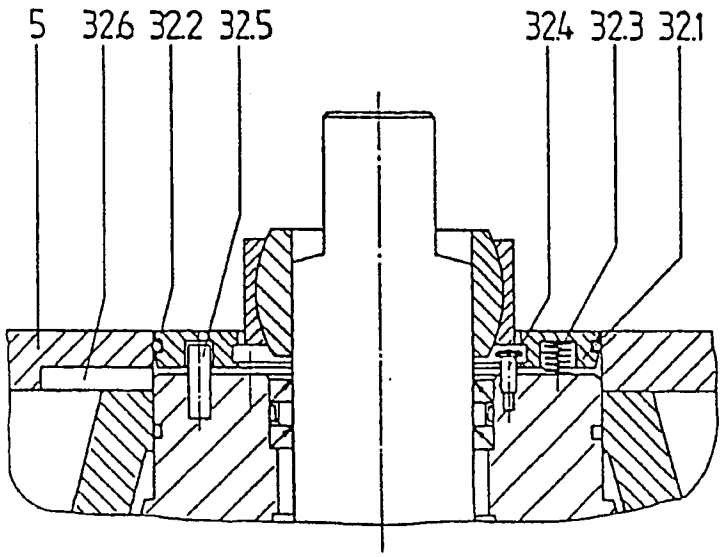

Figure 6

The axial face seal is a wearing part. In order to maintain proper sealing function, it is necessary that the axial face seal protrudes, when relieved, at least 0.020" over the sealing plate (5 on fig. 6).

The axial face seal can be removed after loosening the stop screw (32.4 on fig. 6)

When replacing the seal be sure that the springs and o-ring are properly installed.

Be sure that the air channel (32.6 on fig. 6) is thoroughly cleaned.

The o-ring may be oiled slightly to ease installation, but no other surfaces should be greased or oiled.

Rillito has repaired the axial face seals by taking thin surface machine cuts on the face of the seal.

The thickness of the lower sealing plate is critical, if it is machined below the minimum thickness, the axial face seal will not sit down flush with the sealing plate making adjustment of gap impossible. Minimum thickness for both upper and lower sealing plates is 23 mm (0.9055")

Replacement of the Lower Sealing Plate

With Cellular wheel removed:

1) Unscrew the fastening bolts (33 on fig. 5, 17 pieces)
2) Lift the plate over the drive shaft (28 on fig. 5) and pull it out (weight approx. 275 lbs)
3) Lower sealing plate can be machined to a **minimum** thickness of 23 mm (0.9055") and to 0.004" flatness and 0.008" parallel.

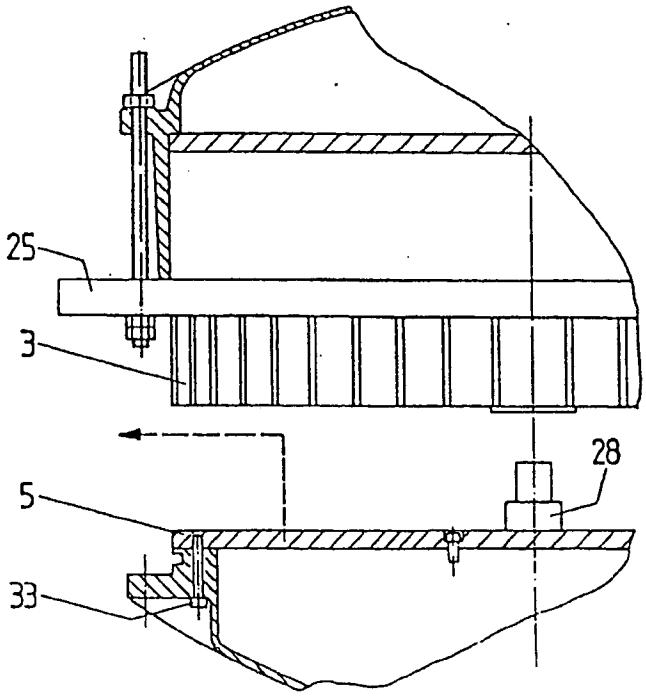

Figure 5

4) Remove the old sealing material from the plate and casing.

Removal of Upper Sealing Plate

'th the cellular wheel and lower sealing plate removed:

1) Remove three fastening screws (14 on fig. 3) and replace them with three all-thread rods (15 on fig. 3), these are M 12 x 430 MM, lock down tightly
2) Install tubing (16 on fig. 3) and Nut (17 on fig 3) onto all-thread
3) Unscrew the remaining fastening screws (14 altogether), one screw must be accessed from the feed box.

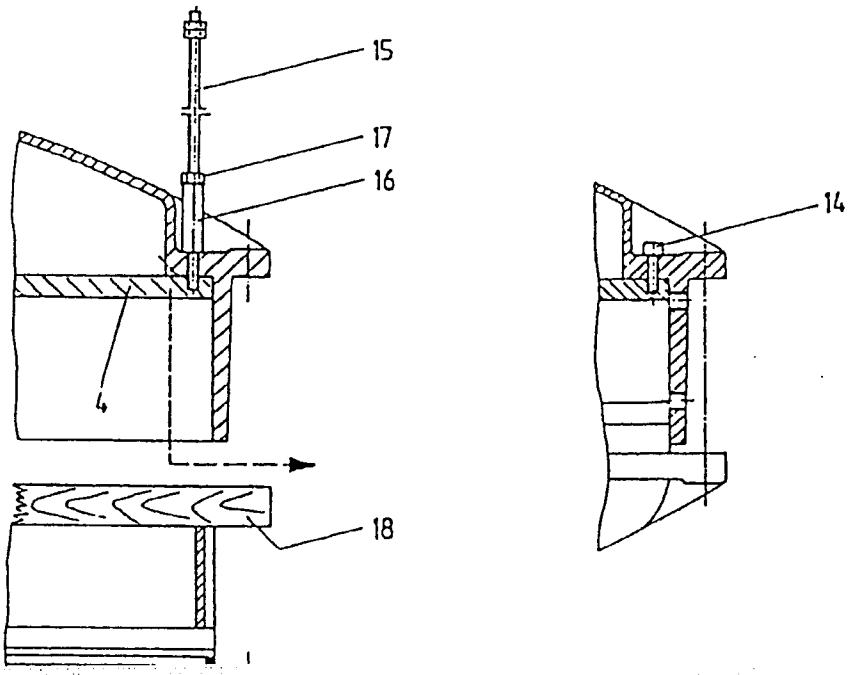

4)

5)

6)

1)

2)

3)

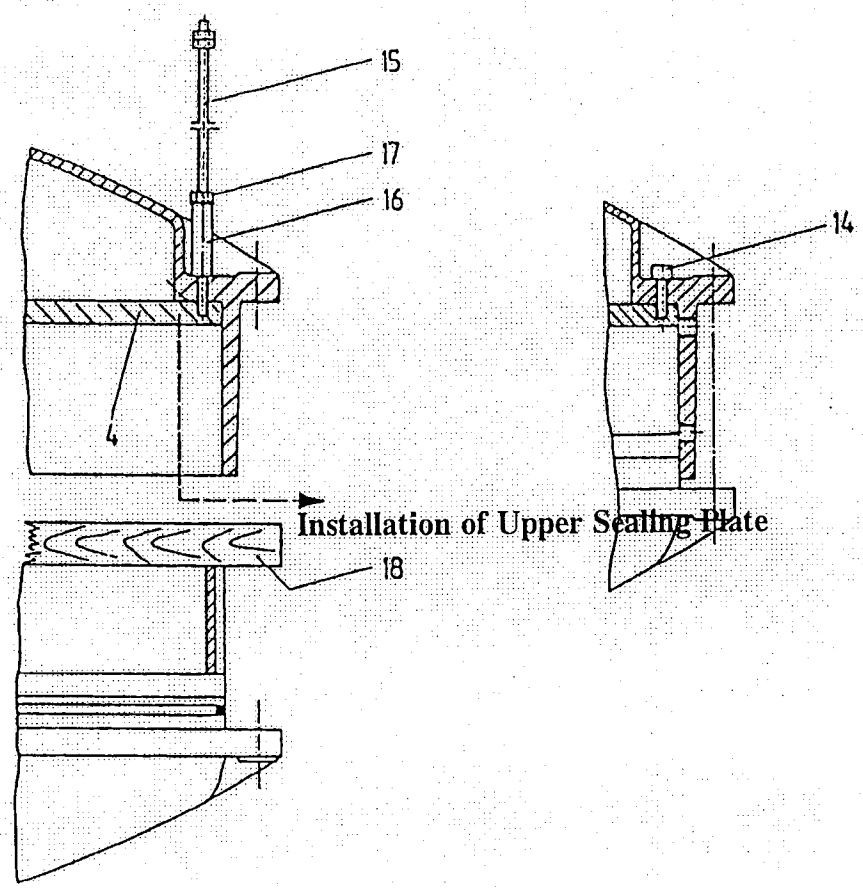

Installation of Upper Sealing Plate

Figure 4

4) Remove the all thread rods, tubing and nuts.
5) Install the three remaining bolts.
6) Tighten bolts in a criss-cross pattern to approximately equal tightness. Re-check each bolt in a circular pattern after all have been tightened.

Installation of the Lower Sealing Plate

1) Apply a thin layer of liquid sealing material (#2 Red Permatex) to the plate and casing.
2) Slide the new or machined lower sealing plate into position, lifting it over the drive shaft.
3) Install 17 new fastening bolts (33 on figure), tighten in a criss-cross pattern to approximately

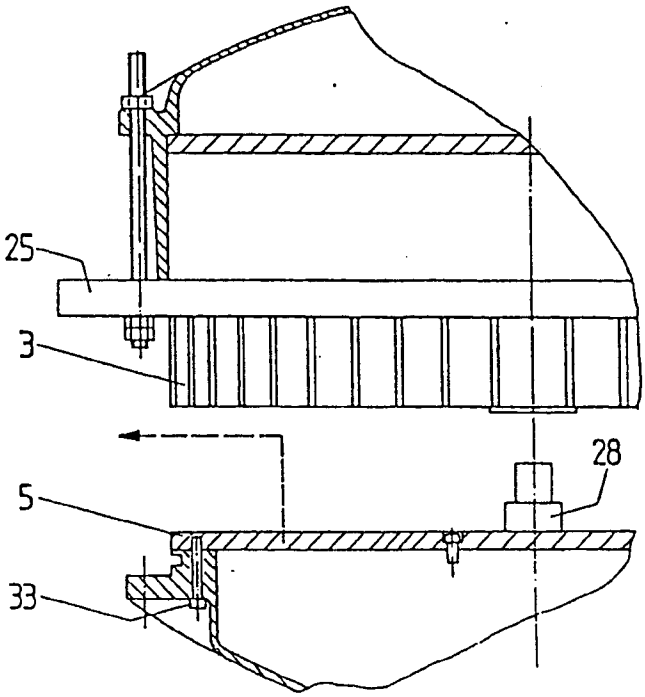

Figure 5

equal torque value. Re-check each bolt in a circular pattern after they have been tightened.

4) Install the Axial Face Seal as described previously.

Installation of the Cellular Wheel

1) Move the cellular wheel into position on top of the lower sealing plate, lifting it over the drive shaft.
) Screw down the mounting bar (25 on fig. 4) in the wheel center (26 on fig. 4)
3) Lift the tie bar with the two spindlers (27 on fig. 4) until the cellular wheel is suspended well above the lower sealing plate.

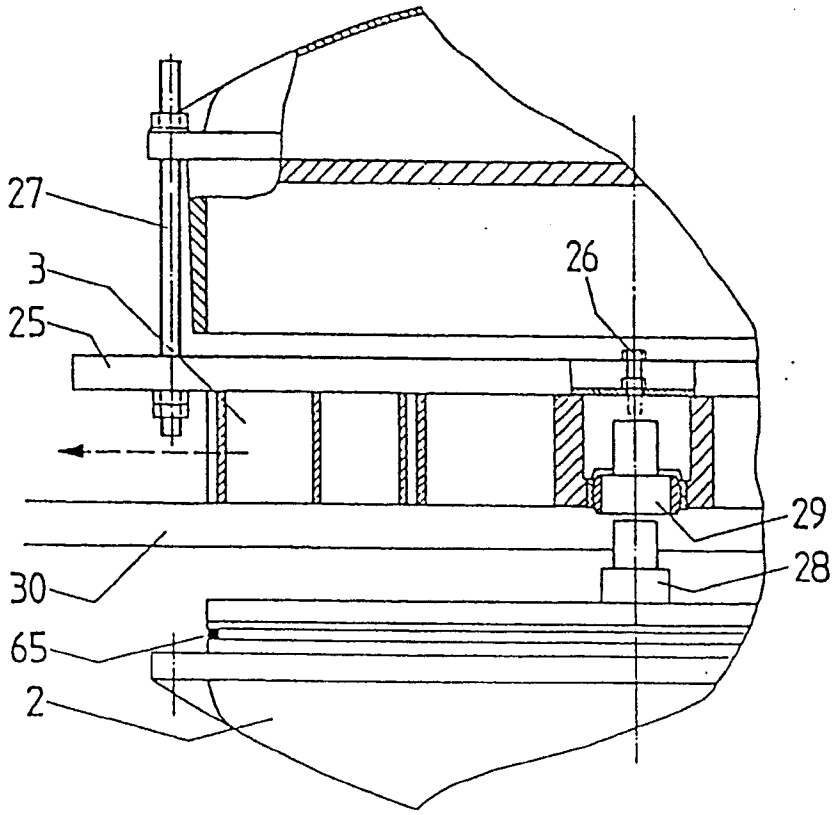

Figure 6

4) Carefully clean all excess grease from the shaft (28 on fig. 6), the hub (52 on fig. 6) and the sealing plate (5 on fig. 6)

5) Clean driving surface (62 on fig. 7) and spherical joints (29 on fig. 7) and grease them lightly
6) Lower the Cellular Wheel, paying close attention to the vertical position of the spherical joint (29 On fig. 7) and to the correct catching of the driving surface (62 on fig. 7)

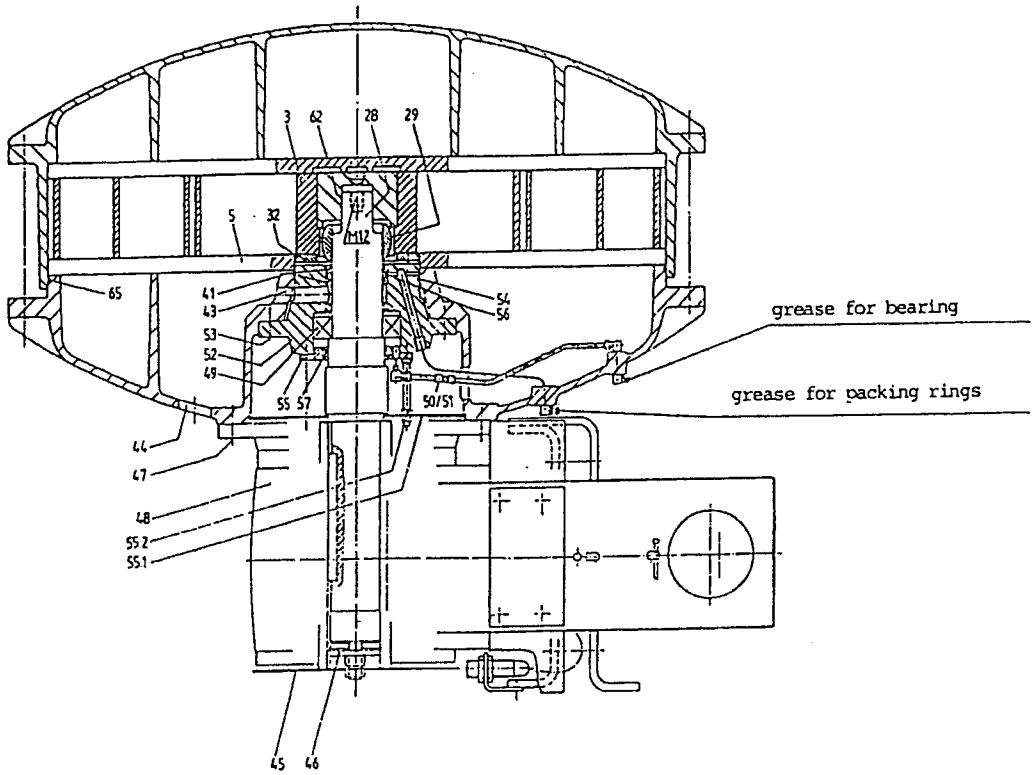

Figure 7

Mounting of the Rotor Casing

1) Clean the o-ring (65 on fig. 7) and the fitting surface and grease them
2) Install the 3 adjusting screws (12 on fig. 8, red color) into the original holes to the right of the inspection holes (20 on fig. 8)
3) Install 3 screw-down screws (12.1 on fig. 8, black color) into the 4th hole behind the adjusting screws
4) Evenly pull up the lower part using the 3 mounting spindles. Be sure not to tip the cellular wheel
5) Note the correct position of the tappet bolt (21 on fig. 8)
6) Tighten the self securing nuts (23 on fig. 8) on the adjusting screws (12 on fig. 8) and the screw-down screws (12.1 on fig. 8) tighten the lower nut firmly.

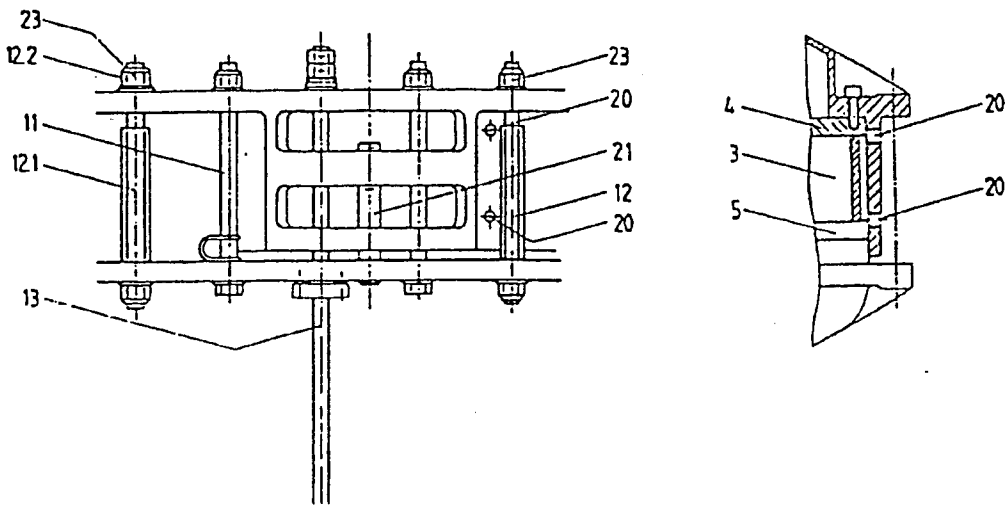

Figure 8

7) Adjust the gap between the Cellular Wheel and the Upper Sealing Plate to approximately 0.020" by means of the self securing nuts (23 on fig. 8)
) Screw the disk (12.2 on fig. 8) and the self securing nuts (23 on fig. 8) onto the screw-down bolts (12.1 on fig. 8) but do not tighten.
9) Mount the remaining bolts (11 on fig. 8) to at least 1/32" clearance but do not tighten them.
10) Connect the air piping and electrical connections.
11) Take care that all cables and flexible tubes run vertically through the pivot axis.

Adjust Rotor Gap per Instructions

Procedure for Checking Gap

Pfister lists three (3) ways to check and adjust gap between the seal plates (4 and 5 on fig.1) and the cellular wheel (3 on fig. 1). Gap an be checked in running, shut down or running and loaded conditions.

1) **Shut Down -**

   a) Measure the gap using feeler gauges through the 6 inspection holes (20 on fig. 1). Set the gap to .008" on all points using the three adjusting screws (12 on fig. 1 red color) and the fine pitch thread nut (23 on fig. 1).

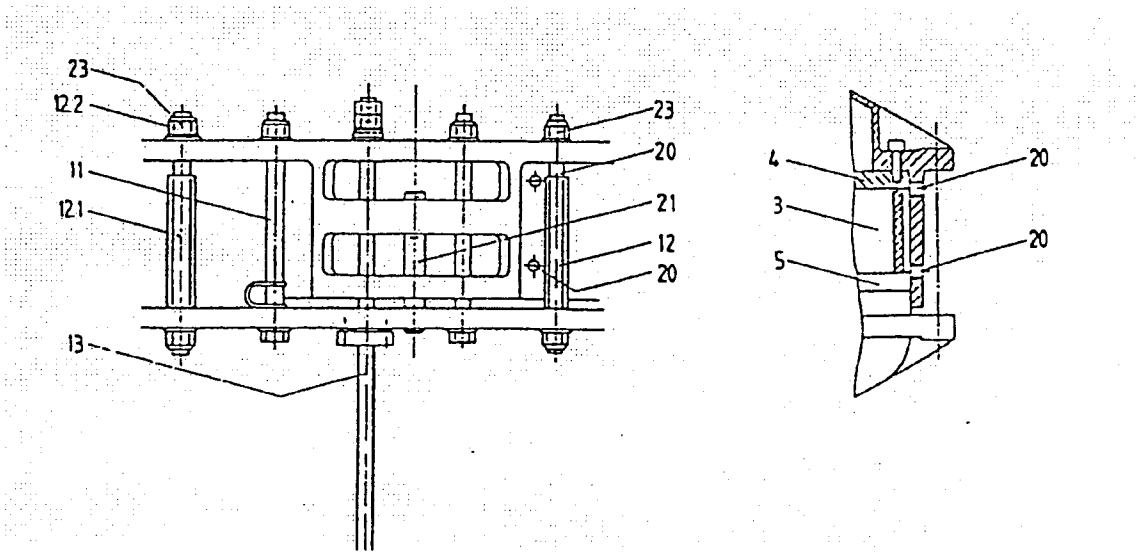

figure 1

   b) From our experience at Rillito, we have found that as the Cellular Wheel and Sealing Plates wear, achievement of the 0.008" gap on all points becomes impossible. We have set 0.008" as the <u>target</u> gap. We have run successfully with as high as 0.016" on some points. The tower Pfister is currently gapped at **0.011"**.

2) **Running Without Material -**

   a) Check for rotation, should be counterclockwise when viewed from top.
   b) Adjust motor speed to approximately 1000 RPM
   c) Slowly close the gap on the three adjusting screws (12 on fig. 1) while constantly observing the current draw. If the current increases or if contact between the Sealing Plates (4 and 5 on fig. 1) and the Cellular Wheel (3 on fig.1) can be sensed through the drive belt, reset the nuts (23 on fig. 1) and the adjusting screws. Loosen by 1/8 turn (0.007").
   d) Close the inspection holes (20 on fig. 1)
   e) Tighten or loosen the nuts (23 on fig.1) attached to screws (12.1 on fig. 1 black color) so that the disks (12.2 on fig. 1) can be shifted by hand.
   f) Adjust the 15 screws (11 on fig. 1) and 3 mounting spindles (13 on fig. 1) to approximately 0.016". These screws and spindles must never be completely tightenend.

3) **Running with Material -**

a) Procedure is same as without material, Scale must be in Manual operation with constant feed.

Rillito Plant has checked gap without material both running and not as described above. In our experiences we have noticed some "squealing" coming from the units, this does not appear to be a problem as long as it is minimal (i.e. not grinding or associated with high amp readings).

Another critical item to avoid damage to the Sealing Plates or Cellular Wheel is to maintain the purge air system, this keeps the plates and wheel clean of buildup that can wear them.

Foreign object (i.e. bolts, steel, etc..) can be particularly damaging to the plates and wheel, keeping these items out of the scales is imperative.

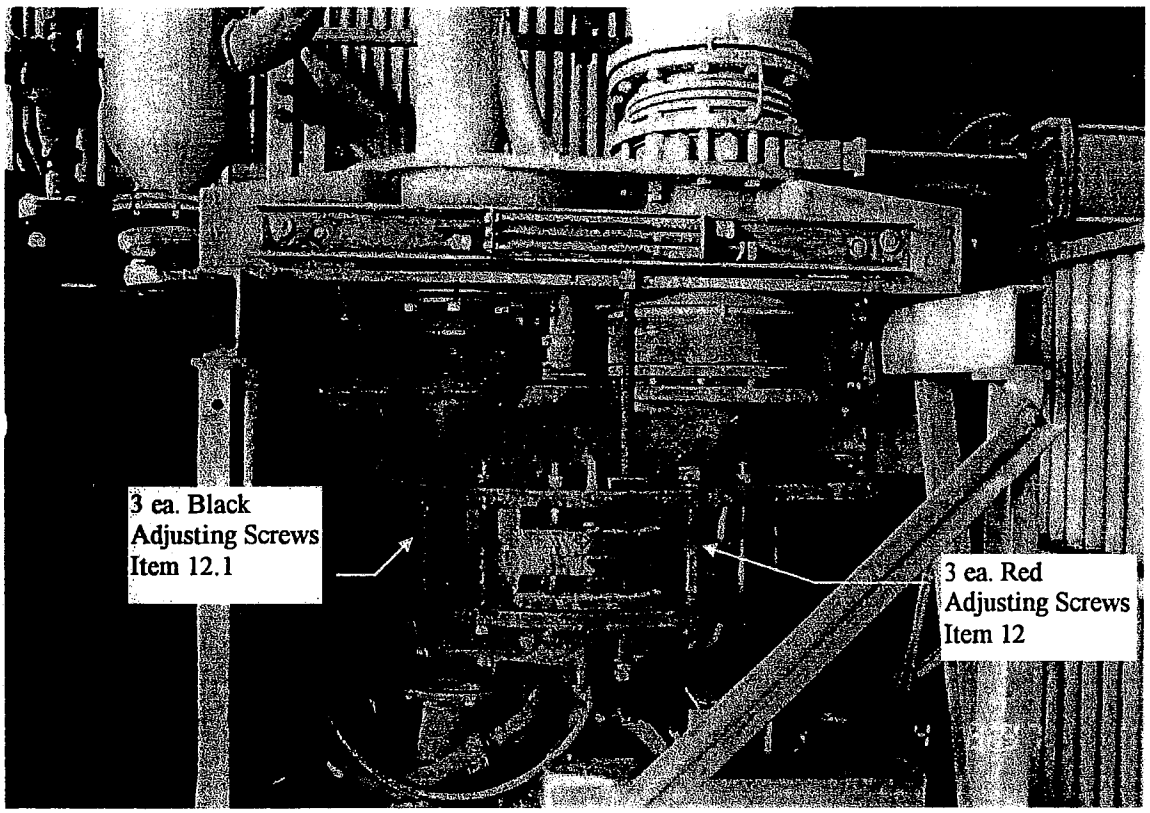

DUST COLLECTOR MAINTENANCE PROCEDURES

,ee Safety Procedures for Operating and Maintenance for inerting procedures in preparation for maintenance work on collectors.

1) Follow proper lockout procedures for locking out fan (Coal Mill fan is draft fan for these collectors), high pressure air, CO_2 Manifold and Dust Collector Timer.
2) Use Electric Hoist to remove "lid" from top of Dust Collector.
3) Set "lid" onto "feet" mounted to top of adjacent Collector.
4) Inspect inside of clean air compartment for any coal buildup, clean as necessary.
5) Remove blow tubes to access dust collector bags.
6) Inspect blow tube holes for wear or damage, repair or replace blow tubes as needed. Damaged holes can cause premature bag failure if high presure air is not directed into center of dust collector bags.
7) Remove old bags by first removing venturi and then pilling out bag and cage together. Inspect venturis for damage from high pressure air or dents or dings, damaged venturis can prevent bags from properly sealing against tube sheet.
8) Be careful in handling any bags that are full of coal. Try to keep coal from becoming airborne.
9) Bags and cages must be removed from coal tower for stripping.
10) Strip bags and dispose of properly.
11) Inspect cages for rust, corosion, broken wires, etc.. Damaged cages can poke holes in dust collector bags. Replace any damaged cages.
12) Carefully install new bags on cages, taking care not to damage bags. Stack cages and bags carefully to avoid damage to bags.
13) Hoist new bags and cages to top of coal tower with electric hoist, bags and cages should not be slung or tied together but rather put in appropriate "basket" for hoisting.
14) Install new bags and cages, be sure that ground wire is making contact with wire cage.
15) Install Venturis, blow tubes and lid.
16) Inspect all Diaphragms for cracks or other defects, replace all that are defective, if more than ½ of the diaphragms are defective, replace all of them.
17) Due to the construction of these dust collector, the use of "visolite" or other leak detection material is not possible, so discharge of fan must be watched closely upon start up with new bags.
18) Upon start up, dust collector timer should remain off until differential pressure reaches approximately 4" H_2O.