ATTACHMENT 4

MISCELLANEOUS UNIT DESCRIPTION

ADEQ Revisions:

The Concrete Management Program (CMP) is referenced in Attachment 7, 7.3.3, and a copy is located in Attachment 15."

Section 4.1.2: TCU permitted operating parameters/controls are 6 tons per hour maximum for 11 hours per day maximum (6 am-5 pm) for up to 6 days per week for a total of 20,592 tons per year based on modeling in Appendix M.

Section 4.1.3: MSU permitted operating parameters/controls are 2 tons per hour maximum for 4 hours per week maximum (between 8 am-5 pm) for up to a total of 416 tons per year based on modeling in Appendix M.

Section 4.1.4: Mechanical Blender permitted operating parameters/controls are 4 tons per hour maximum for 6 hours per week maximum (between 8 am-5 pm) for a total of 1,248 tons per year based on modeling in Appendix M.

4. MISCELLANEOUS UNITS DESCRIPTION

"Miscellaneous Unit" is defined in Code of Federal Regulations (CFR) Title 40, Section 260.10 as a hazardous waste management unit (HWMU) that is used to treat, store, or dispose of hazardous wastes but that does not fit the Resource Conservation and Recovery Act (RCRA) definition of container, tank, surface impoundment, pile, land treatment unit, landfill, incinerator, boiler, industrial furnace, or underground injection or unit eligible for a research, development, and demonstration permit under 40 CFR § 270.65. The HWMU, thermal concentrating unit (TCU), mechanical shredding/size reducer unit, and mechanical blender at World Resources Company (WRC) meet the above definition of miscellaneous units.

The U.S. Environmental Protection Agency (USEPA) has not set technology-based design and operating standards for the large diversity of technologies eligible for permitting as miscellaneous units. Rather, USEPA has provided a set of environmental performance standards intended to protect groundwater, surface water, air, and soil from the migrations of hazardous constituents. These performance standards require permit applicants to evaluate the potential environmental impacts of the unit and to demonstrate that the unit will not adversely affect human health and the environment. As stated in 40 CFR § 264.601, protection of human health and the environment includes:

- Prevention of any releases that may have adverse effects on human health or the environment due to migration of waste constituents in the groundwater or subsurface environment;
- Prevention of any releases that may have adverse effects on human health or the environment due to migration of waste constituents in surface water, or wetlands, or on the soil surface; and
- Prevention of any release that may have adverse effects on human health or the environment due to migration of waste constituents in the air.

The manner and effectiveness in which WRC achieves these standards is described in various specific portions of the permit application. Section 4.1 provides general dimensions and structural descriptions for the HWMU, TCU, mechanical shredding/size reducer unit, and mechanical blender. Sections 4.2 and 4.3 provide information regarding the manner in which WRC complies with the environmental performance standards of 40 CFR § 264.601. In part, these performance standards are met because the TCU, mechanical shredding/size reducer unit, and mechanical blender are located within the boundaries of the HWMU. Compliance with the requirements of 40 CFR §§ 264.601 and 264.602 for the four miscellaneous units is achieved or demonstrated through the use of several documents and procedures, including the following:

- Recordkeeping and Reporting (Section 3.2);
- Waste Analysis Plan (WAP) (Section 5);
- Inspection Schedule (Section 6);
- Procedures to Prevent Hazards (Section 7);
- Training Program (Section 8);
- Groundwater Detection Monitoring Program (Section 9);
- Contingency Plan (Section 10); and
- Ambient Air Quality Evaluation (Part III, Appendix M of the permit application).

®1997 by WORLD RESOURCES COMPANY. All rights reserved.

4.1 General Dimensions and Structural Description

4.1.1 Hazardous Waste Management Unit

The HWMU consists of the contiguous area bounded by the concrete and concrete-filled masonry containment berm, and includes the fabric mesh canopy, an engineered canopy designed for wind reduction, and other processing equipment including the TCU, mechanical shredding/size reducer unit, and mechanical blender. The HWMU is approximately 300 feet by 570 feet with a surface area of approximately 4 acres. A site plan of the HWMU, TCU, mechanical shredding/size reducer unit, mechanical blender, and component equipment is provided in Site Plan SP-S01. Construction details and cross sections of the HWMU sections and containment berms are provided in Figures F-H02.1, F-H02.2, and F-H03. The HWMU is contained by a minimum 16-inch high concrete and concrete-filled masonry berm. A schematic depicting which berms are concrete and which are concrete-filled masonry is provided in Figure F-H04. Interior berm heights are shown in Figure F-H05.

Based on construction date and configuration, the HWMU is divided into two areas: east and west. Each was constructed differently utilizing different compacted soil, flexible membrane liners, and concrete liner configurations. The areas cannot be differentiated based on visual observation of the concrete surface and no internal partitions exist. The following is the construction history of the HWMU:

- East area construction commenced in 1981, was completed in 1987, and was modified in 1991. In 1993, a rail spur installation began for on-site railcar loading and was completed in 1994; and
- West area construction commenced and was completed in 1988.

The HWMU is covered by a permeable open-weave textile canopy, referred to as the fabric mesh canopy, supported by 4-inch diameter vertical steel columns, anchored in concrete footings in the concrete base. The sides of the fabric mesh canopy are sloped to the surface outside the HWMU except in areas where there are door/gate openings required for entry and exit. The tensioning cables and associated exterior support poles are the only structural support mechanisms for the canopy. The supporting poles inside the canopy are used to keep the flex out of the roof and to maintain a consistent ceiling height for operations. The functions of the fabric mesh canopy include controlling wind dispersal of the materials by decreasing the wind velocity while allowing permeation of solar radiation to enhance the evaporation of moisture in the recyclable material. Technical information and certified engineered drawings on past repairs to the support structures are included in Appendix F, F-E Canopy Information.

The majority of the surface area of the HWMU is used for the production of metal concentrate product. Other operational activities conducted in this area include recyclable material receiving and finished metal concentrate product loading and shipping; metal concentrate formulating and blending; drying of recyclable materials in the TCU; size reduction of filter media and other recyclable material in the mechanical shredding/size reducer unit; and intermediate bulk container (IBC), drum and liner cleaning. These activities are conducted within the fabric mesh canopy and berm of the HWMU. The receiving and shipping areas, as shown in Site Plan SP-S01, include:

- The bulk and non-bulk (i.e., IBCs, drums, boxes, etc.) receiving area and loading dock located in the north central portion of the HWMU (shown as "Bulk/Non-Bulk Shipping & Receiving B" in Site Plan SP-S01);
- The bulk/non-bulk truck receiving area located immediately west of the loading dock receiving area (shown as "Bulk/Non-Bulk Receiving A" in Site Plan SP-S01); and
- The rail spur located on the east portion of the HWMU (shown as "Bulk Shipping and Receiving" in Site Plan SP-S01).

Recyclable material drying and formulation/blending activities are located primarily in the northeast and central areas of the HWMU. The TCU, mechanical shredding/size reducer unit, and mechanical blender are

®1997 by WORLD RESOURCES COMPANY. All rights reserved.

located near the northwest corner of the HWMU. Hazardous debris treatment is located near the south central portion of the HWMU.

4.1.1.1 Foundation

The HWMU is constructed upon a layer of compacted native soil. Through operation, this foundation has proven to be adequate in supporting the weight of the HWMU base, the metal concentrate, and the material-moving equipment that are operated upon the HWMU.

4.1.1.2 Containment System Design

The HWMU consists of the contiguous area bounded by the concrete and concrete-filled masonry containment berm and includes the fabric mesh canopy and other processing equipment. The HWMU is approximately 171,000 square feet in surface area. Construction details and cross sections of the HWMU sections and containment berms are provided in Figures F-H02.1, F-H02.2, and F-H03. The surface of the unit is sloped to the south, and predominantly to the southwest corner.

Along the south containment berm the Wastewater Treatment Unit (WWTU) has five pick-up points to remove stormwater. Sensors detect water present and send a signal to the programmable logic controller, which opens the five actuated ball valves, starting an air diaphragm pump to remove stormwater from the HWMU and transfer it to one of the WWTU raw water tanks. The programmable logic controller will open and close the pick-up point ball valves, based on water location (See Appendix F-F for engineered drawings).

Based on respective construction dates and configurations, the HWMU is divided into two areas: east and west. Each area was constructed utilizing different configurations of compacted native soil, flexible membrane liners, sand, aggregate base coarse (ABC) material, and concrete surfaces. The two areas are not separated by internal partitions.

As shown in Figure F-H02.1, the east area is constructed upon a layer of compacted native soil. Permalon® liner material is positioned above the compacted soil. Permalon® is a high-density, cross-laminated polyethylene liner, manufactured by Reef Industries, Inc. A layer of sand is located above the liner material, and an unknown thickness of ABC material is above the layer of sand. The sand layer is not shown on Figure F-H02.1. In some areas, an unknown thickness of asphalt is on top of the ABC material. A final 4- to 6-inch-thick layer of fiber-reinforced concrete is on top of the HWMU base. The surface of the uppermost concrete layer is treated with a chemically resistant sealant.

The west area of the HWMU consists of a Permalon® liner positioned upon an unknown depth of compacted native soil (Figure F-H02.1). A 12-inch layer of compacted native soil is positioned on top of the lower liner and covered with a second, similar upper Permalon® liner. A layer of sand is on top of the Permalon® liner, and a 6-inch thick layer of ABC material is located above the sand and covered by a 4-inch-thick layer of fiber-reinforced concrete. The sand layer is not shown on Figure F-H02.1. One of the Permalon® liners is 10 mils thick and the other is 20 mils thick. The concrete surface of the western portion of the HWMU is also treated with a chemically resistant sealant.

Located on the east border of the HWMU, the railroad spur's construction is similar to that of the west section. It consists of 12 inches of compacted native soil above a lower Permalon® liner. A second, upper Permalon® liner is located above the soil and also covered by 12 inches of compacted native soil. Eight inches of ABC material covers the compacted soil and is covered by 6 inches of fiber-reinforced concrete. The surfaces immediately around and between the railroad tracks are covered with asphalt.

The surface of the HWMU is compatible with the types of recyclable materials it contains. The hazardous constituents in the materials are not reactive with or damaging to the concrete surfaces upon which they are

®1997 by WORLD RESOURCES COMPANY. All rights reserved.

placed. As such, the life of the containment system components is expected to be at least as long as the active life of the HWMU.

4.1.1.3 Leachate Detection, Collection, and Removal System

The HWMU was not constructed with a leachate detection, collection, and removal system under the concrete surface because the HWMU was constructed prior to 1992 and, therefore, was not required to follow the 1992 minimum technical requirements (MTRs). A demonstration of compliance was also submitted in accordance with Arizona Administrative Code R18-8-264.A (40 CFR 264.251(b).

4.1.1.4 Vegetation and Rodent Control

Vegetation and rodent control are not necessary to prevent damage to the HWMU base and its components. Due to the mostly concrete construction of the base, growth of vegetation through the containment system has not been observed. Similarly, attack and degradation of the base by rodents has not been observed. The chemical nature of the recyclable materials processed by WRC is neither conducive to plant growth nor attractive to rodents or other pests.

4.1.2 Thermal Concentrating Unit

Recyclable materials are processed through WRC's TCU located in the northwest corner of the HWMU. The unit is a natural gas fired APV Spin Flash agitated fluidized bed drying system. The TCU has a maximum throughput of 6 tons per hour and can be operated 24 hours per day, 7 days per week (26,280 tons/year). Additional information regarding the manner in which the TCU is operated is provided in Section 3.1.3. The MAC Filter Baghouse and secondary filtration unit control emissions from the TCU while the fabric mesh canopy minimizes particulate emissions.

As required by the manufacturer's specifications, the TCU required a specially designed reinforced concrete foundation to withstand the static and dynamic loading that would be encountered during routine operation. These foundation designs were based on engineering calculations conducted for the baghouse structure, which is the heaviest and tallest component of the TCU, and therefore subject to more shear forces. This design was prepared by a registered professional engineer experienced in structural engineering, and the foundation was installed by WRC, prior to installation of the TCU. Technical documents including the engineering calculations, and design and operation of the TCU are provided in Part III, Appendices C and Q of the permit application.

4.1.3 WEIMA America, Inc. Shredder

The WEIMA America, Inc. (WEIMA) shredder, a mechanical shredding/size reducer unit, is used to shred/reduce the size of filter media and other recyclable materials that may accompany recyclable materials received from generators. Process throughput for this unit is estimated to be two tons per hour (2,920 tons/year). This throughput estimate is based on an operating schedule of approximately 4 hours per day. The WEIMA mechanical shredding/size reducer unit weighs approximately 5,500 pounds and is constructed of heavy-duty carbon steel and cast iron.

If the shredder is shut down for servicing or when it is not in use the visible debris will be cleaned from the surfaces using a brush, broom or other appropriate tool. If the removed debris requires further processing in the shredder, it will be placed into a 300-gallon polyethylene tote container or other similar container that will be closed except when adding or removing waste, labeled as hazardous waste, and stored in the HWMU. If the debris does not require further processing it will be blended with the recyclable material.

To ensure the safety of WRC personnel, the mechanical shredding/size reducer unit is installed and operated in accordance with manufacturers' instructions. It is located near the northwest corner of the HWMU, away from areas where standing water would be present following a storm event. Technical documents pertaining to the design and operation of the mechanical shredding/size reducer unit is in Part III, Appendices D and R of the permit application.

®1997 by WORLD RESOURCES COMPANY. All rights reserved.

4.1.4 Scott Equipment Co. Blender

WRC utilizes a mechanical blender for blending of the recyclable materials that comprise each of the various concentrate product produced by WRC. Maximum throughput for the mechanical blender is approximately four tons per hour, and the maximum operation schedule is estimated to be 6 hours per day (8,760 tons/year). The mechanical blender weighs approximately 18,000 pounds.

To ensure the safety of WRC personnel, the mechanical blender is installed and is operated in accordance with the manufacturer's instructions. The mechanical blender is located near the northwest corner of the HWMU, away from areas where standing water would be present following a storm event. Technical documents for the design and operation of the mechanical blender are provided in Part III, Appendices E and S of the permit application.

4.2 Control of Releases to Groundwater and Soil

4.2.1 Control of Run-On

The HWMU is protected from storm water run-on by a concrete and concrete-filled masonry berm that surrounds the HWMU. The minimum berm height is 12 inches relative to the ground surface outside the HWMU. In areas where vehicle access is required, the entry way is sloped to prevent run-on to or run-off from the unit. The Bulk/Non-Bulk Shipping & Receiving Area B is sloped below grade so that truck beds may be loaded and unloaded at the same level as the HWMU surface. If storm water collects in this below-grade area, it is retained and treated in the on-site wastewater treatment unit (WWTU).

Parking lots and other asphalt or paved concrete areas on the facility property are sloped to direct storm water flow to a catch basin located immediately north of the HWMU. The catch basin connects to a storm water discharge pipe that runs from the catch basin, through a storm water conveyance that runs beneath the HWMU, to the southwest parcel and into a natural drainage area. Refer to Site Plan SP-MW01.

4.2.2 Control of Leachate and Run-off

The concrete surface on the HWMU is sloped to direct liquids primarily to the southwestern portion, and to a lesser extent, the southeastern portion of the HWMU. Precipitation that contacts the HWMU is collected in the corners of the HWMU, promptly transferred to the on-site WWTU, and is subsequently discharged to the publicly owned treatment works (POTW). Minor amounts of leachate originating from stockpiles of recyclable materials generally are allowed to evaporate in place, but may be collected using a wet vacuum or floor squeegee to the extent necessary to minimize safety hazards (i.e., slip hazards).

A 25-year, 24-hour isopluvial, prepared by the U.S. Weather Bureau and revised in 1970, was used in an analysis of the effects of a 25-year storm event. The volume of water that would be deposited over the surface of the HWMU during the course of the 25-year storm has been calculated to be approximately 335,605 gallons. Contouring of a topographic map of the HWMU was performed, and planimetry of this map was performed to calculate the cumulative volume of water that could be contained at increments of 0.5-foot contours. The results show that the 25-year storm (335,605 gallons) could be completely contained within the southern portion of the HWMU, with the depth of water at the lowest elevation within the HWMU being limited to less than 1.3 feet. As shown on Figure F-H05, the interior berm heights at the southern portion of the HWMU range from 23 to 36 inches. The result of this analysis shows that the HWMU is capable of containing the 25-year storm with significant residual capacity for daily sources associated with operation of the HWMU, which are estimated at 1,000 gallons per day.

Following a storm event, accumulated storm water that collects in the southwest corner of the HWMU is pumped into a holding tank within the WWTU. The WWTU has a permitted capacity of 90,000 gallons per

®1997 by WORLD RESOURCES COMPANY. All rights reserved.

day (GPD) but 1,000 GPD are generated during normal operations. Thus 89,000 GPD would be available for stormwater treatment. If necessary, temporary storage tanks (e.g., Frac Tanks) and pumps can be rented on a temporary basis to provide additional storage capacity or accelerate the transfer of storm water from the HWMU. Based on the calculations (see engineering report), with the combined pump and tank capacity the volume estimated to result from a 25-year, 24-hour storm event (335,605 gallons) could be removed in approximately 40 hours.

4.3 Control of Releases to Air

The potential generation and dispersion of dust from a site such as WRC is of concern because of potential exposure and safety considerations, including impact on visibility near the HWMU. USEPA has delegated Clean Air Act permitting and compliance authority within Maricopa County to the Maricopa County Air Quality Department (MCAQD).

Potential sources of air pollutant emissions from WRC include fuel burning equipment, the TCU, and the mechanical blender or shredder. Particulate emissions from the TCU are directed to and controlled by the MAC Filter Baghouse and secondary filtration unit (see Appendix C). Particulate emissions from either the shredder or the mechanical are directed to and controlled by the ArrestAll dust collector (see Appendix D). The dispersion of airborne particulate matter generated in the HWMU is also reduced by the fabric mesh canopy that encloses the area. The fabric mesh canopy, while not significantly impeding the solar drying process, acts to reduce the effective wind velocity through the processing area, thus reducing the driving force by which particulate matter may be released and carried away from the recyclable material. Wind speed measurements conducted in 1994 indicated that the fabric mesh canopy reduced the average wind speed in the HWMU by approximately 78 percent[1]. Some individual process equipment located under the fabric mesh canopy are equipped with dust collectors and/or filters to further reduce the quantity of airborne pollutant emissions from these point sources.

To monitor the airborne particulate emissions from the facility, and to ensure compliance with applicable air pollution control regulations, WRC follows a rigorous, MCAQD-approved air sampling program. Continuous flow, ambient air samplers, each having a PM_{10} separator head, are situated along the four, compass-direction boundaries of the WRC facility. The siting of these samplers is constrained by the layout of WRC property features and operational areas, and the need for the samplers to be secure on WRC's property. Sampler locations were assigned by the MCAQD. In general, all but the east sampler are unavoidably located in close proximity to active WRC material handling operations, neighboring trucking facilities, industrial fabricating shops, active parking lots, or unpaved vehicle traffic routes. The north and east locations are on the outer edges of active parking lots, the west location is located along an unpaved facility maintenance road, and adjacent to a trucking operation.

The PM_{10} sample collection and analysis procedures follow USEPA methodologies for ambient air monitoring. On each sampling day, the four samplers are started during the day shift, and samples are collected for 24 consecutive hours. The time and volume totalizer flow meter readings on the sampler units are noted as each sample is started. Standard filter sheets are mounted in filter frames and installed in the sampler units. The filters are pre-weighed to nearest 0.1 gram prior to mounting in the filter cartridge frame.

After the 24-hour sample period, the filter cartridges are recovered and taken to WRC's laboratory for removal from the frames and analysis. The filters are first desiccated (up to several days) until consistent dry filter weights are obtained on consecutive days. The dried filters are then digested quantitatively in acid solution, and the filtered extract is analyzed by inductively-coupled plasma atomic emission spectroscopy (ICP-AES) to quantify the metals content.

The ambient metals and total PM_{10} concentrations obtained from the filtered samples represent averages over the 24-hour sampling period. The concentrations are calculated from the net air volume sampled (in cubic

[1] WRC Air Quality Control Document

®1997 by WORLD RESOURCES COMPANY. All rights reserved.

feet or cubic meters) and the total weight of individual metal elements captured on the filter. The analytical technique is not capable of discerning the various metal compound species (e.g., oxides, hydroxides, chlorides, metal complexes) that are present in the sample.

The resultant ambient metals concentrations are tabulated quarterly, and a summary is directly reported to MCAQD on an annual basis, in accordance with the facility permit conditions. All four samplers are operated for every sampling event, and the sampler that is generally downwind during the event is to be reported. WRC consults on-line wind data for Phoenix to identify the sampler that is representative of the downwind direction for reporting purposes.

Measured airborne particulate metal concentrations are submitted to MCAQD annually. The source test report for the May 2012 source test is provided in Part III, Appendix N of the permit application. Particulate emissions from the HWMU, TCU, mechanical shredding/size reducer unit, and mechanical blender are detailed in the modeling report presented in Part III, Appendix M of the permit application.

4.4 Concrete Liner Management

This section describes the basic elements of WRC's HWMU concrete maintenance program, a program that is designed to minimize the migration of hazardous constituents into the concrete floor, and into the soil layer between the floor and underlying membrane liner, and to provide data regarding the extent of migration in damaged concrete and the underlying sol layer.

The need for concrete surface repair and replacement is closely tied to inspection procedures that are implemented by WRC. As specified in the Inspection Schedule (Section 6.3), the concrete surface of the HWMU is inspected on a daily basis for the presence of cracks and other degradation. The entire surface of the HWMU, including beneath recyclable materials, is also inspected at least annually for the presence of cracks and other degradation as a function of the maintenance department. During inspection, when an area is found to be in need of repair or replacement, that area is isolated to prevent further usage until the repair or replacement has been completed. Documentation of the results of the inspections is maintained by WRC. Based on the results of concrete surface inspection, the types and severity of cracks, as well as the condition of the concrete will determine whether a repair is appropriate or replacement is necessary.

4.4.1 Criteria for Concrete Repair and Replacement

The objective of concrete repair is to maintain the integrity of the HWMU concrete surface and the effective life of the HWMU concrete surface before degradation potentially results in a release pathway to underlying soils. The objective of the concrete replacement is to periodically replace those portions of the HWMU concrete surface that are most physically impacted by ongoing operations. Replacement of these areas of the concrete surface therefore prevents releases of hazardous constituents of recyclable materials.

WRC developed the narrative criteria provided below for repair and replacement of the HWMU concrete surface. Results of the concrete surface inspection procedures mentioned above are compared against objective criteria to determine whether repair is appropriate or replacement is necessary. In effect, the criteria outlined below define the frequency at which sampling data will be obtained and used to evaluate the potential presence of adversely impacted subsurface construction materials or soils.

4.4.2 Concrete Surface Repair Criteria

Repair activities will be conducted if either of the following is observed:

- Linear types of cracks found to be wider than 0.125 inch at the surface or deeper than 0.5 inch are designated to be repaired;

®1997 by WORLD RESOURCES COMPANY. All rights reserved.

- Construction or expansion joints exhibiting evidence of deterioration of the joint sealant.
- Deterioration includes breaking, splitting, and separation of the sealant from the joint, but does not include discoloration, minor wear, and other non-substantive conditions.

When crack repair is required, a concrete saw or a hand grinder with a diamond-tipped "crack chaser" is used to prepare a clean, uniform surface. The cut or grinded surface is cleaned by vacuum. The cut or grinded crack is then filled with an appropriate commercial sealant and allowed to cure. On completion, the surface is coated with a chemically resistant sealant.

4.4.3 Concrete Surface Replacement Criteria

Concrete will be replaced if any of the following is observed:

- Corner break: A corner break is a crack that intersects the joints at a distance less than or equal to one-half the slab length on both sides, measured from the corner of the slab.
- Linear or diagonal cracking affecting the structural integrity of section. These cracks would normally divide the slab into two or three pieces. They are differentiated from linear types of cracks that simply need repair at the point when multiple repairs (three or more) are required for a particular crack.
- Map or pattern cracking within a contiguous area exceeding 150 square feet: Map or pattern cracking is a series of cracks that extend only into the upper surface of the pad.
- Erosion of the concrete surface exceeding 0.5 inch within a contiguous area exceeding 150 square feet.

When replacement of concrete is required, the designated area for repair will be cordoned off and any recyclable material will be removed. The area will be swept clean in preparation for repairs. The area containing the damaged concrete is removed and replaced at least six inches in all directions beyond damaged concrete or when a construction or expansion joint is reached.

Activities constituting a major concrete replacement (greater than 70 cubic yards) require a 7-day advance notification to ADEQ and must be performed under the direct supervision of an independent Arizona-registered professional engineer (P.E.) and/or geologist (R.G.), as appropriate. Any concrete area being replaced will be cordoned-off, and the recyclable hazardous waste material will be removed. The area will be cleaned and swept free of all hazardous waste material. The concrete will be saw-cut and removed. Since there is a period of time between the concrete excavation and the new concrete pouring, provisions are taken to ensure that no HWMU waste run-off or precipitation enters the excavated area. The new concrete will contain fiber mesh reinforcement with strength of at least 3,500 psi. During the recommended seven-day curing period, the surface of the new concrete is sealed with a sealant (Chem Tech One), backer rod is installed in the expansion joints, and the expansion joints are sealed with a sealant (DuroCaulk).

4.5 Solid Waste Management Units

As identified in the draft RCRA Facility Assessment (RFA) Report prepared by ADEQ, dated May 30, 2007, three Solid Waste Management Units (SWMUs) and two Areas of Concern (AOCs) exist at WRC's facility. The three SWMUs are identified as the HWMU, the TCU, and the mechanical shredding/size reducer unit. The two AOCs are referred to as "Storm Water Discharge Area 1 (East)" and "Storm Water Discharge Area 2 (West)." The following sections address information for SWMUs required by 40 CFR § 270.14(d) that are not already addressed earlier in Sections 3 and 4.

®1997 by WORLD RESOURCES COMPANY. All rights reserved.

4.5.1 Operational History

Historical aerial photographs of the site and surrounding properties are available for the years 1949, 1954, 1958, 1964, 1970, 1977, 1979, 1980 through 1992, 1996 and recently in late 2005. The aerial photographs indicate the facility and surrounding land were used for farming from 1949 through 1977. The site was vacant from 1979 to 1981 except for a small building on the west parcel of the site toward Sherman Street. The 1982 aerial photograph shows the beginning of WRC's operations on the parcel located on the east half of the site which was leased, at that time, from Mr. Kent W. Bunger.

For purposes of describing the use of the site from 1982 to present day, the operating site is divided into three parcels: the east parcel (3.4 acres), the west parcel (4.0 acres), and the southwest parcel (2.8 acres); a total of 10.2 acres.

Prior to WRC beginning operations, the east parcel was used for farming, the west parcel was used for farming and as a truck lot, and the southwest parcel was used for farming, truck maintenance, and parking. The southwest parcel was contaminated with petroleum volatile organic compounds (VOCs) due to used oil being applied on the land surface for dust control prior to its purchase by WRC. Contaminated soil was excavated and transported to an ADEQ-approved landfill prior to WRC's acquisition of the property. The parcel was tested and certified to not contain contaminants above applicable clean-up levels.

As indicated by aerial photographs, trucking operations occupied the west and southwest parcels from 1984 to 1989. The land located east of the site was used for farming during this time. WRC expanded its operations to include the west and east parcels in 1989, when WRC acquired the east parcel from Mr. Kent W. Bunger. In 1991, WRC acquired the west and southwest parcels from Mr. Arthur Merman.

4.5.2 Releases of Hazardous Waste

In its draft RFA Report, it was stated that ADEQ did not note any release of hazardous waste or hazardous waste constituents from the HWMU. ADEQ states that it is unlikely that significant releases of soil would occur due to the general conditions and design of the SWMUs. Soil testing has been conducted on areas of concern and determined there was no hazardous waste contamination. Further, ADEQ concludes that any releases of airborne recyclable materials as particulate matter would not likely result in discernable soil contamination.

ADEQ stated it was not clear whether the dried concentrate discharge from the TCU is a significant source of particulates. Emission source testing in 2012 quantified the total particulate matter emission rate from the TCU and this rate was used in refined modeling. The revised Ambient Air Quality Evaluation (Part III, Appendix M of the permit application) addressed emissions of particulate matter and hazardous air pollutants (HAPs) from all emission sources within the boundary of the HWMU, including the TCU. The Evaluation concluded that, with the exception of short-term nickel compound impacts, the predicted off-facility concentrations were uniformly below stringent health-based benchmarks for both acute and chronic inhalation exposure. Further conservative assessments of short-term nickel compound dispersion indicated that while predicted benchmark exceedances might occur between 1 and 18 hours per year, depending on location, these levels would be confined to the industrial areas immediately to the west and east of the WRC facility. Consequently, there was no appreciable likelihood of adverse impacts to the public caused by WRC particulate and HAPs emissions.

In regard to the Storm Water Discharge Area 1 (East), ADEQ noted the potential for hazardous constituents to be carried to the on-site storm water detention basin in "minute quantities." The RFA Report recommends that the detention basin be characterized to determine possible impacts, but stated that such characterization could be delayed until facility closure.

®1997 by WORLD RESOURCES COMPANY. All rights reserved.

ADEQ concluded that it is unlikely that releases of hazardous materials into groundwater would occur due to the general conditions and design of the SWMUs. The depth to ground water below the facility is approximately 90 feet below ground surface. Further, the agency noted that should a release of hazardous material occur, it is unlikely that humans would be exposed.

®1997 by WORLD RESOURCES COMPANY. All rights reserved.

SITE PLANS

SP-S01 Site Plan

SP-MW01 Storm Water Conveyance

©1997 by WORLD RESOURCES COMPANY. All rights reserved.

World Resources Company

SITE PLAN SP-S01

NORTH

BERM

BLOCK WALL

FENCE

RAILROAD TRACK

SuperSpan MESH CANOPY

500'

400'

650'

360'

900'

8113 West Sherman Street

Railroad Spur

Electric Transformer

Bulk Shipping

Administration & Laboratory Building

Hazardous Waste Management Unit (HWMU)

Parking Lot

Lab Check In Station

Bulk/Non-Bulk Receiving B

Certified Bag/Drum Scale

Wash Station

Certified Truck Scale

Parking Lot

Bulk/Non-Bulk Receiving A

Mechanical Shredding/ Size Reducer Unit

Mechanical Blender

Particle Collector

Locker Station

Manifest/Shipping Check In Station

EMPLOYEES SHOWER BUILDING

Tools/Parts Storage

Maintenance Shop

Control Room

Thermal Concentrating Unit

Secondary Filters

Radiation Detector

Supply Shed

Diesel

Agglomerate Agent Tanks

Oils

Gravel Road

Parshal Flume

WWTU-Wastewater Treatment Unit

Mix Tank

Filter Press

Holding Tank-1

Holding Tank-2

Holding Tank-C

Holding Tank-B

Holding Tank-A

Carbon Columns

Resign Columns

PLC

NW Holding Tank

SW Holding Tank

Gravel

Equipment Storage

Equipment Storage

Storm water Drainage Area

CBS Storage

Gravel

Bag Scale

CBS Station

Asphalt

Asphalt

Site Plan

Created: May 1, 1997;
Revision 5; Nov 25, 2012

World Resources Company
SITE PLAN SP-MW01

Monitoring Well meeting 40 CFR 264.97(a)(2) requirements

Monitoring Well meeting 40 CFR 264.97(a)(1) requirements

Monitoring Well to assist in measuring groundwater elevation per 40 CFR 264.97(f) and for supplemental sampling during initial two year Detection Monitoring Program

Drain Entrance

Stormwater Drainage

NORTH

BERM

BLOCK WALL

FENCE

RAILROAD TRACK

SuperSpan MESH CANOPY

Average Groundwater Flow Direction

8113 West Sherman Street

Railroad Spur

Bulk Shipping D

Electric Transformer

Administration & Laboratory Building

Hazardous Waste Management Unit (HWMU)

Parking Lot

Lab Check In Station

MW-9

MW-6 (DRY)

Certified Truck Scale

Parking Lot

Bulk/Non-Bulk Receiving B

Certified Bag/Drum Scale

Wash Station

Bulk/Non-Bulk Receiving A

Mechanical Shredding/ Size Reducer Unit

Mechanical Blender

Particle Collector

Thermal Concentrating Unit

Secondary Filters

Locker Station

MW-7 (DRY)

Manifest/Shipping Check In Station

Break Room Showers

Maintenance Shop

Control Room

Supply Shed

Diesel

Agglomerating Agent

Oils

Gravel Road

Partial Flume

MW-10

Asphalt

WWTU-Wastewater Treatment Unit

Mix Tank

Filter Press

Holding Tank-1

Holding Tank-2

Holding Tank-C

Holding Tank-B

Holding Tank-A

Carbon Column

Resign Columns

PLC

NW Holding Tank

SW Holding Tank

MW-11

Gravel

Equipment Storage

Equipment Storage

Storm water Drainage Area

CBS Storage

Gravel

Bag Scale

CBS Station

Asphalt

Monitor Well Network

Created: October 15, 1997; Revision 4; May 12, 2008

FIGURES

F-H02.1 HWMU East-West Cross Section

F-H02.2 HWMU South Area Cross Section

F-H03 HWMU Berms and Footings Cross Sections & Details

F-H04 HWMU Berm Construction Materials

F-H05 HWMU Berm Height

©1997 by WORLD RESOURCES COMPANY. All rights reserved.

World Resources Company

Hazardous Waste Management Unit
East – West Cross Section

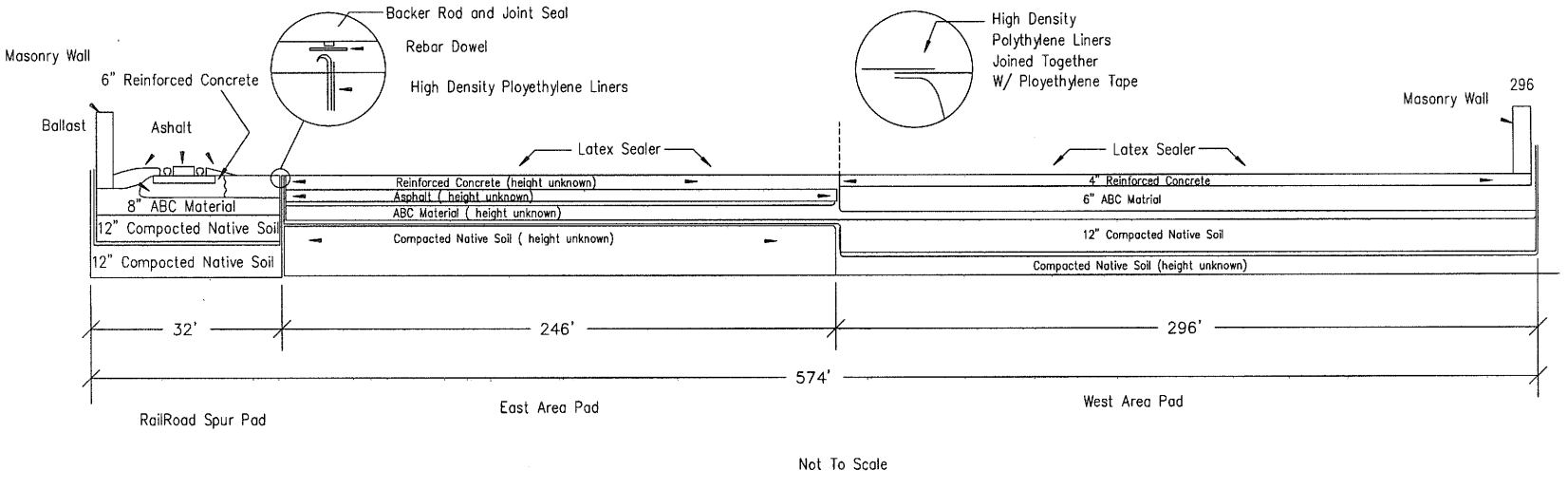

Not To Scale

Figure F-H02.1

World Resources Company

Hazardous Waste Management Unit
South Area Cross Section

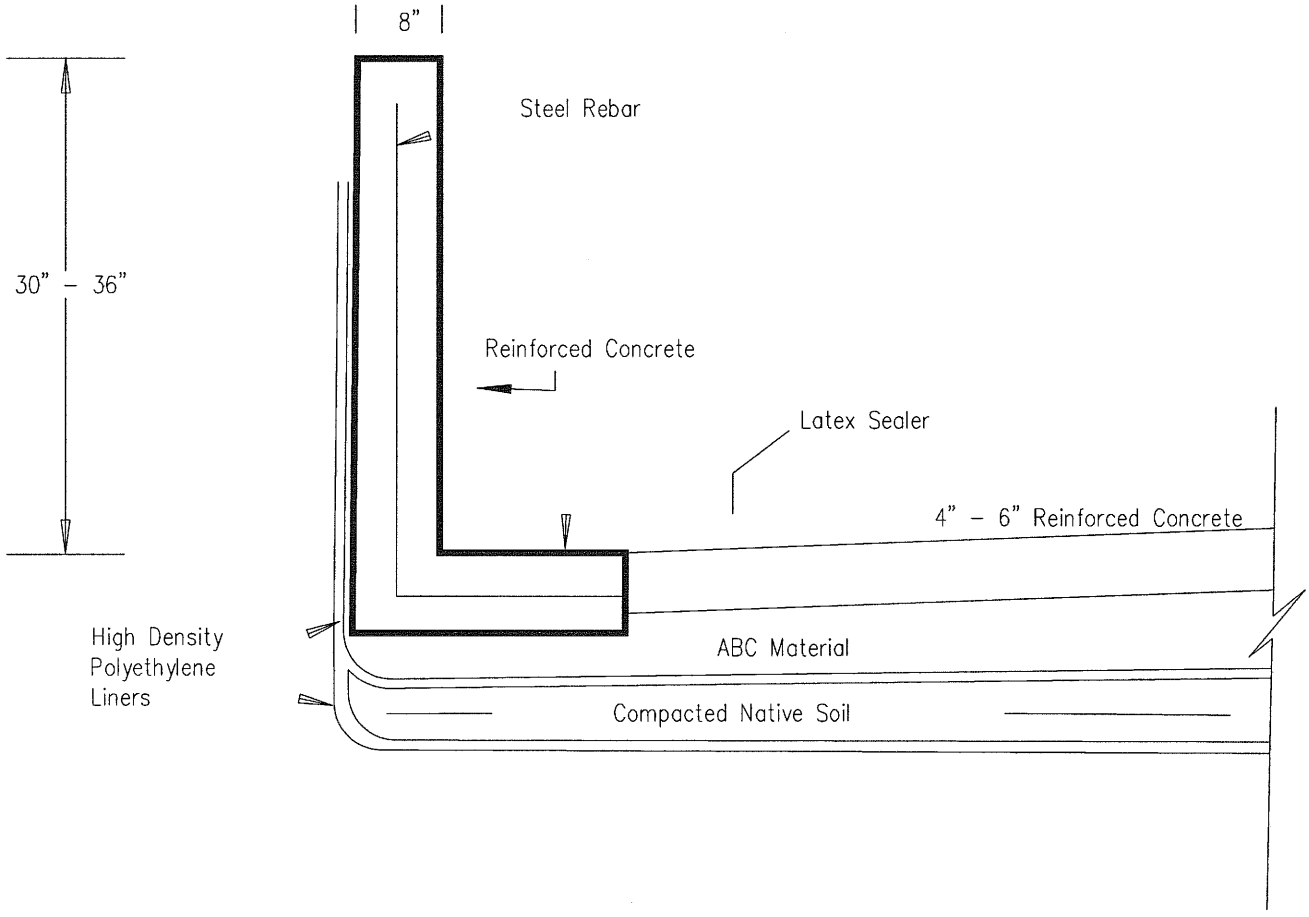

Not To Scale

Figure F-HO2.2

Figure F-H03: HWMU Berms and Footings Cross Sections & Details

[HWMU: Hazardous Waste Management Unit]

May 1, 1997, Cross sections and details field-verified or provided by WRC.

1/2

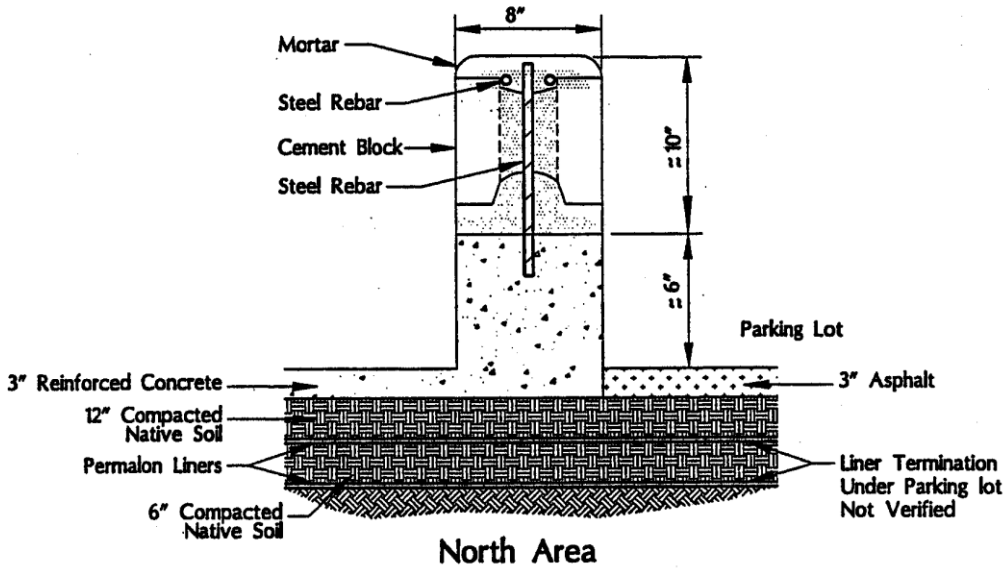

North Area
Perimeter Berm Cross Section

NOT TO SCALE
(FIELD VERIFIED)

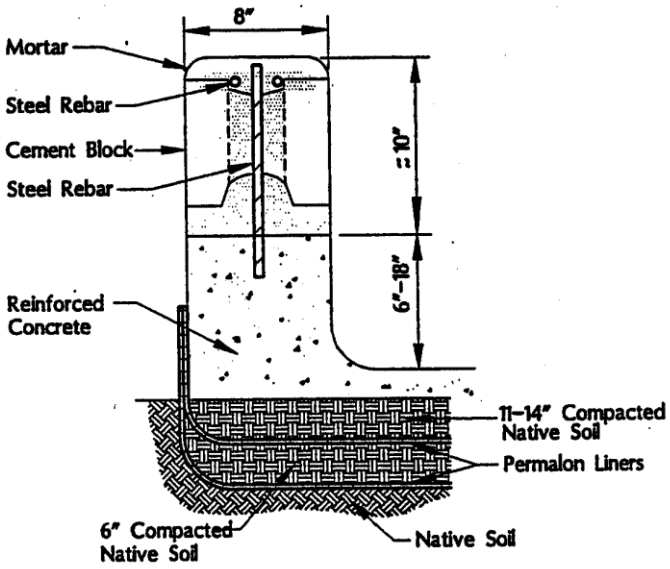

West Area
Perimeter Berm Cross Section

NOT TO SCALE
(NOT FIELD VERIFIED)

Figure F-H03: HWMU Berms and Footings Cross Sections & Details

[HWMU: Hazardous Waste Management Unit]

May 1, 1997, Cross sections and details field-verified or provided by WRC. **2/2**

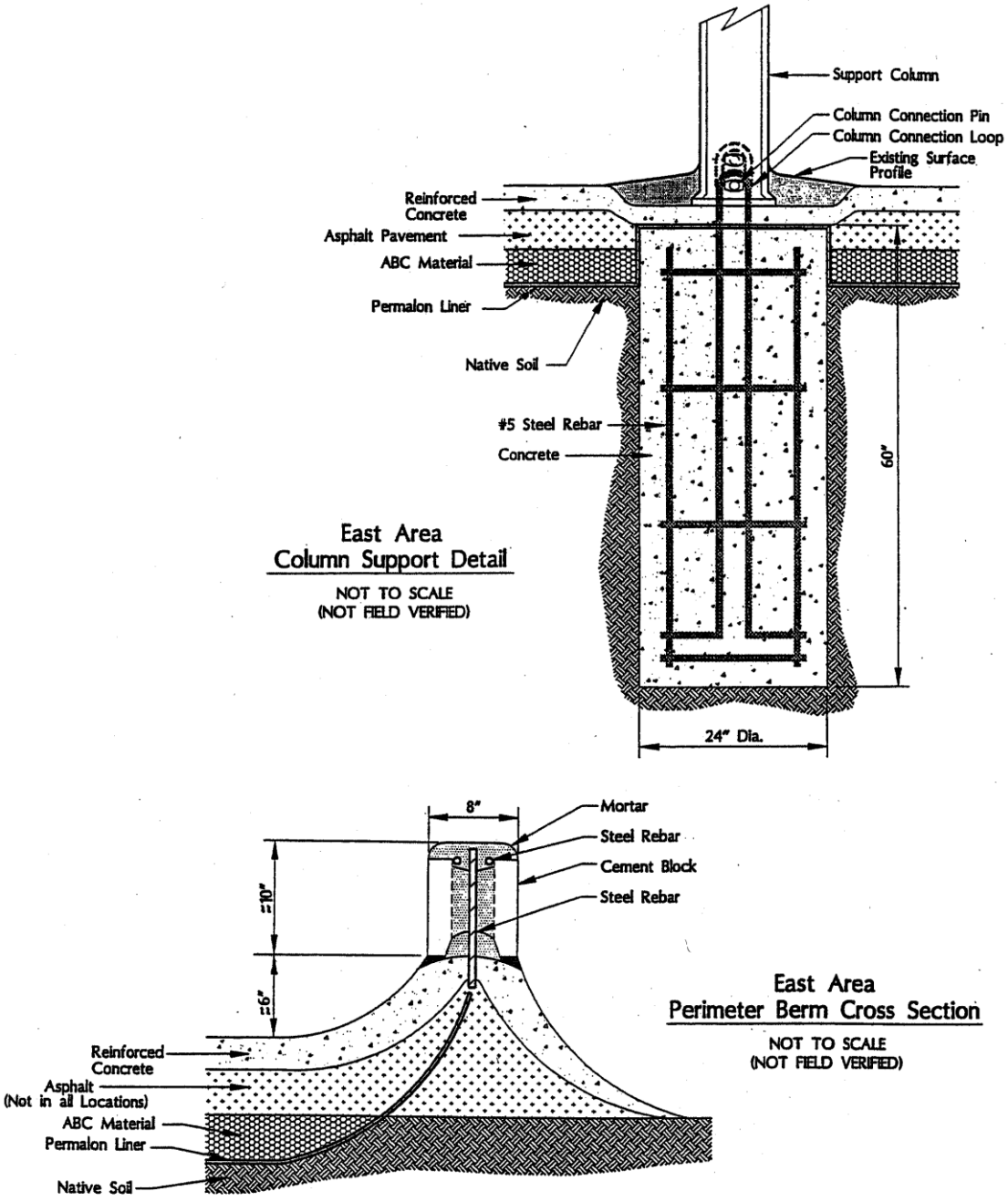

World Resources Company

Hazardous Waste Management Unit – Berm Construction Materials

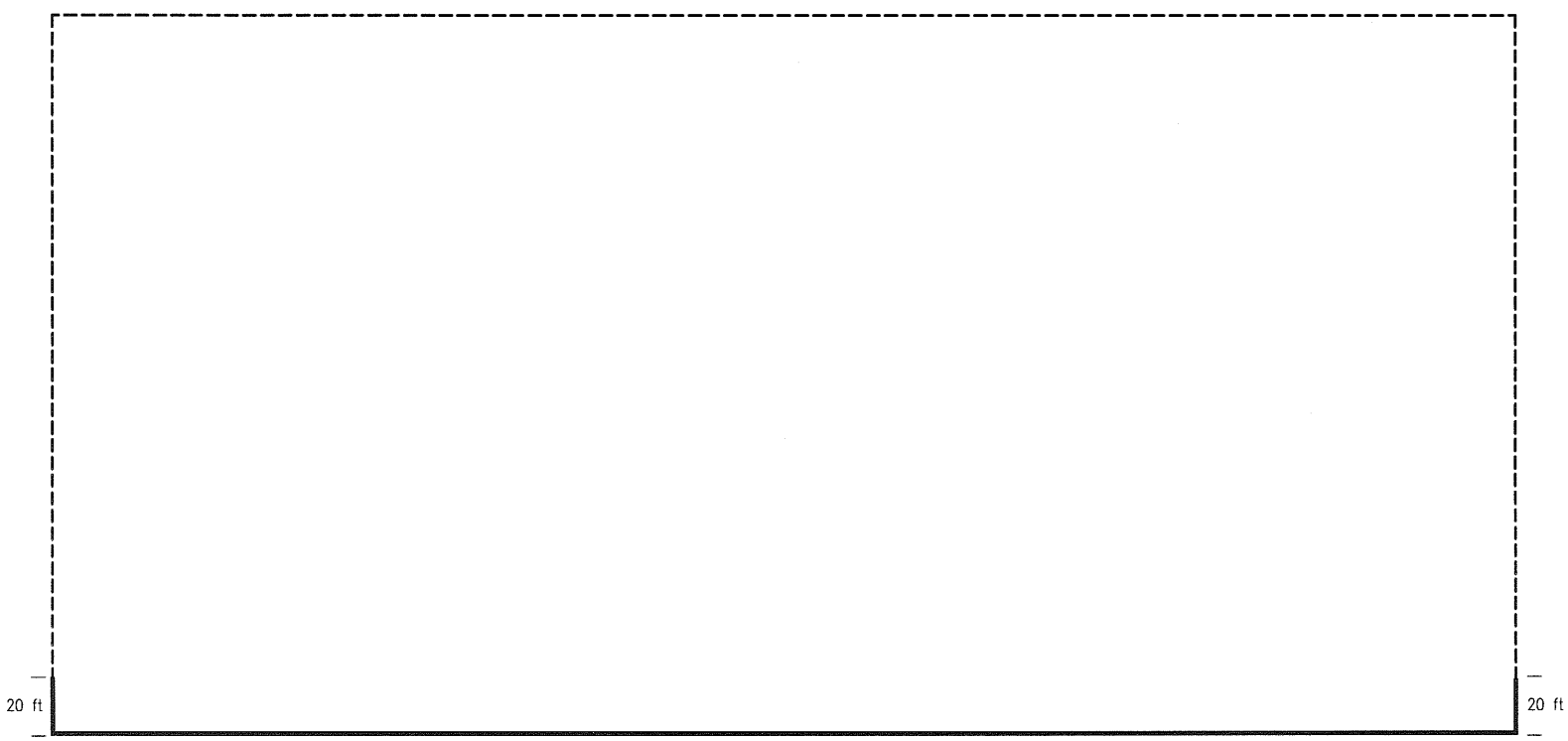

= concrete berms – concrete @ 3500 psi w/fiber mesh

– – – = masonry block filled w/concrete

Figure F–H04

World Resources Company

Hazardous Waste Management Unit – Berm Height

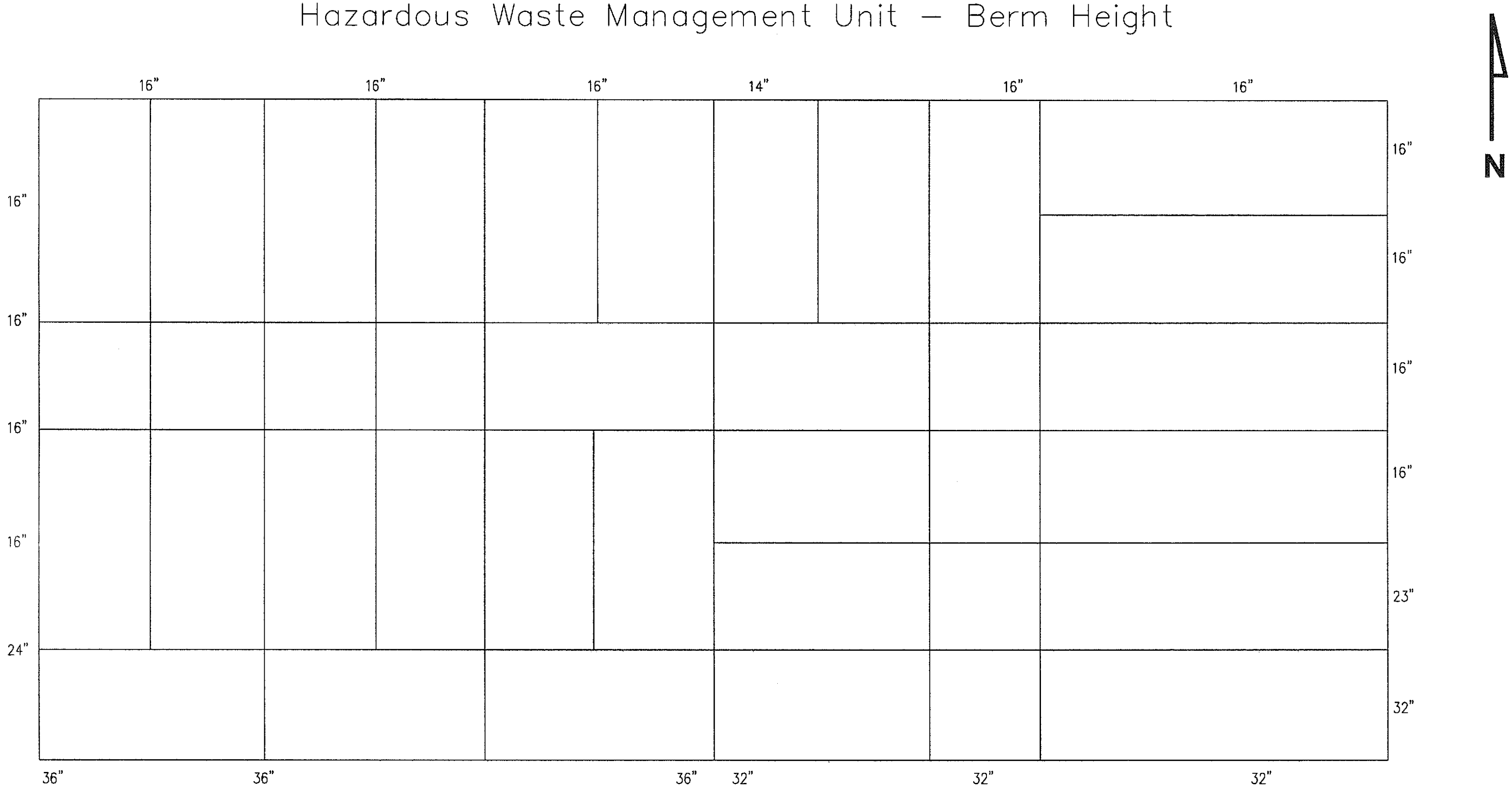

Figure F-H05