Danielle R. Taber

From: Jerry Worsham <JWorsham@rhlfirm.com>
Sent: Monday, July 14, 2014 9:55 AM
To: Danielle R. Taber
Cc: Laura L. Malone; Anthony E. Young (anthony.young@azag.gov); Furlough, Linda (Linda.Furlough@Meritor.com); 'rmongrain@arcadis-us.com' (rmongrain@arcadis-us.com); Moore, Quentin (Quentin.Moore@arcadis-us.com)
Subject: Public Comments on RID's Operation and Maintenance Plan (Synergy October 2013-Revision 3)
Attachments: Ltr to D Taber dated 7-14-14 re Comments on RID O & M Plan.pdf

Danielle:
In response to ADEQ's Public Notice of June 19, 2014, attached is an electronic version of the 30 comments supplied by Meritor, Inc. for your review on the captioned Operation and Maintenance (O&M) Plan submitted by the Roosevelt Irrigation District. A hard copy was hand delivered to your office this morning. The main body of the letter provides General and Specific comments as it relates to ADEQ's acceptance of the document with 22 Technical comments under **Exhibit 2** as it relates to how the document is deficient and needs revision. The Technical comments were supplied with the assistance of Arcadis U.S., Inc. I have provided references to specific sources of information if you need to research the background for my comments.

Thanks for putting this out for Notice and public comment. Call me direct at (602) 744-5763 with any questions!

Jerry

_____

Jerry D. Worsham II
Member
Ridenour Hienton, P.L.L.C.
Chase Tower
201 North Central Avenue, Suite 3300
Phoenix, Arizona 85004
E. jworsham@rhlfirm.com | O (602) 254-9900 | F (602) 254-8670 | W. www.rhlfirm.com

Shaine T. Alleman
Taylor R. Bell
Michael W. Brewer
Tiffany F. Broberg
Robert Erven Brown
Ernest Calderón
Jeannette B. Cross
Michael D. Curry
David G. Derickson
Adam D. Driggs
Michael R. Golder*
Robert J. Hackett
April M. Hamilton
James R. Hienton
Dustin C. Jones
Martin T. Jones
John P. Kaites
Lawrence S. Koplow

*Of Counsel

Ridenour Hienton PLLC

RESPECT HONESTY LEGACY

Chase Tower
201 North Central Avenue, Suite 3300
Phoenix, Arizona 85004
Telephone: 602.254.9900 | FAX: 602.254.8670
www.rhlfirm.com

Meaghan K. Kramer
Gary N. Lento
Michael S. Love
Zora Manjencich
Matthew H. Mason
Damien R. Meyer
Howard C. Meyers
Michael J. Minnaugh
Brian D. Myers
Kurt A. Peterson
Patricia A. Premeau
Calvin L. Raup
William G. Ridenour
David R. Smith*+
Kathy Ann Terry*
Scott S. Wakefield
Blake E. Whiteman
Jerry D. Worsham II

+Licensed in New York Only

July 14, 2014

Our File No.: 23787-0001

Arizona Department of Environmental Quality
ATTN: Danielle Taber
ADEQ Project Manager
1110 W Washington Street
Phoenix, Arizona 85054

Re: Comments on the Roosevelt Irrigation District (RID's) "Operation and Maintenance Plan – RID Wellhead Treatment Systems" (Synergy October 2013-Revision 3)

Dear Danielle:

On behalf of Meritor, Inc., I submit these comments on the captioned document. My comments suggest that the Arizona Department of Environmental Quality (ADEQ) should require significant revisions by RID prior to issuing the required certification under the Arizona Administration Code Regulations (AACR) at R18-16-411(E)(1) which states "Certification by the Department that the elements of the operation and maintenance plan adequately protect public health against treatment system failure." In general these comments are submitted to assure that ADEQ can document the benefits (if any) of the four wellhead treatment systems and to assure the public health against treatment system failures.

There are certain requirements for an Operation and Maintenance (O & M) Plan found at AACR 18-16-411 (E) including (1) Certification by ADEQ, (2) a schedule for water quality monitoring, (3) a process for notification to water providers of any NPDES applications and permits, (4) a process to promptly notify water providers of failure of key system components, (5) and a plan to assure operational, maintenance and management practices to achieve water quality discharge standards.

BACKGROUND:

A. Early Response Action. The RID proposed the original **Early Response Action (ERA)** Work Plan dated February 3, 2010. This ERA Work Plan was conditionally approved by ADEQ on June 24, 2010 with four conditions identified as Task No. 1: Public Health Threat; Task No. 2: RID Well Investigation; Task No. 3: Groundwater Modeling; and Task No. 4: Pump and Treat System. The ADEQ conditional approval states, "RID shall begin implementation of Tasks 1 and 2 concurrently and 2, 3 and 4 sequentially."

The Director of ADEQ stated that, "ADEQ's June 24, 2010 approval of RID's February 3, 2010 ERA Work Plan is a final decision. The approval is conditioned upon RID's implementation of the procedures described in the June 24th approval and upon RID's compliance with applicable statute and rule. ADEQ has and will continue to evaluate RID's adherence to these requirements. If ADEQ determines that RID has failed to adequately follow the conditions of approval identified in the June 24th letter or the applicable statutes and rules, ADEQ will take appropriate action to ensure RID meets the terms of the conditional approval, and if compliance is not achieved revoke the approval under the appropriate legal procedures."[1]

RID summarized the ERA as follows:

> The [original] ERA Work Plan includes a [Central Groundwater Treatment Facility] CGTF designed to treat 20,000 gpm of water from ten (10) of the most highly contaminated RID wells using [Liquid Granulated Activated Carbon] LGAC. Four (4) of these wells (RID-89, RID-92, RID-95 and RID-114), the "southern-tier wells," were to be piped approximately ¾ mile north to the Salt Canal and three (3) of the lower concentration wells along the Salt Canal (RID-105, RID-109 and RID-110) were to be piped the same distance south to existing laterals to provide capacity in the Salt Canal for the addition of the four (4) southern-tier wells. The CGTF was to include the following major system components: wet well, pump station, prefilters, LGAC contractors, flush and backwash support systems, and instrumentation and controls[2].

B. Modified Early Response Action. On July 12, 2012, RID submitted a "**Modified Early Response Action** (MERA) Proposal" and followed with the "Modified Early Response Action Work Plan" dated October 22, 2012. Again, ADEQ conditionally approved the October 2012 MERA on February 1, 2013[3].

RID summarized the MERA as follows:

"This Modified ERA would consist of wellhead [Liquid Granulated Activated Carbon] LGAC treatment systems, in lieu of the CGTF, at nine (9) of the most highly contaminated RID

[1] ADEQ letter to David J., Armstrong, Esq. Ballard Spahr, LLP (October 13, 2010)
[2] Modified Early Response Action Proposal, p.7 (RID-Synergy Environmental, LLC (July 17, 2012))
[3] It is presumed the four conditions identified in the ERA and Director Darwin's Statement have been maintained by ADEQ as conditions in the MERA.

wells. Based on information and performance data obtained from the pilot wellhead treatment systems installed and operated at RID-89, RID-92, RID-95 and RID-114, . . . the concept of blending treated and untreated wells along the Salt Canal is a new element introduced in this Modified ERA Proposal. Combining the treated groundwater from wells RID-106, RID-111, RID-112, RID-113 and RID-114 with untreated groundwater from lower contaminant concentration wells RID-105, RID-107, RID-108, RID-109 and RID-110, will achieve a blended water quality that is well below current [Maximum Containment Levels] MCL's at the point of discharge of the Salt Canal into the Main Canal." RID indicated that the **MERA** was a great improvement over the ERA because it:

> Significantly reduces the scope and cost of the final groundwater remedy by reducing the number of impacted RID wells that will need to be addressed by supplemental remedial actions developed during the WVBA Site FS (from 7 to 4 wells) and by providing effective mass contaminant removal and treatment by the earlier implementation of the wellhead groundwater pump, treat and blend systems that will remediate approximately **3500 pounds per year** of VOC contamination in the regional groundwater[4].

However, RID has scaled back the estimated benefits of the MERA and now asserts that, "Phase I design and construction has been completed and wellhead treatment at all four wells is currently underway. . . Based on current VOC concentrations in the Phase 1 RID wells (i.e. RID-89, RID-92, RID-95 and RID-114), the estimated total annual VOC mass removal during Phase I would be up to approximately **1,900 pounds per year**[5].

GENERAL COMMENTS:

Issue:

1.) It would seem now that each MERA RID well is a separate entity which would therefore require its own O & M plan. These wells and treatment systems are not connected in any way and are in a separate geographic location and have a separate outfall. As described by RID in the MERA Work Plan, "Each of the [4] RID wells to be equipped with treatment systems had unique discharge structure and piping and will require individual modifications." As described by RID in a technical briefing to the West Van Buren Community Advisory Board on December 6, 2012, they indicated that RID-89 is designed for a flow rate of 3,000 gallons per minute (gpm), RID-92 is designed for 1300 gpm, RID-95 is designed for 1800 gpm and RID-114 is designed for 2500 gpm. **Exhibit 1** includes the graphic representation of the unique design for each of the four treatment systems. **Comment: RID should be required to create a separate O & M Plan for RID-89, RID-92, RID-95 and RID-114.**

---

[4] Modified Early Response Action Proposal, pgs. 7-8, (RID-Synergy Environmental, LLC (July 17, 2012)). *See* also "Modified Early Response Action Work Plan," Section 4.2, pgs. 24-30 (RID-Synergy Environmental, LLC (October 22, 2012)

[5] MERA Work Plan, Section 4.3.1, p. 28 (RID-Synergy Environmental, LLC, (October 22, 2012))

Issue:
2.) In the O&M Plan, RID cites the MERA Proposal and MERA Work Plan. In the MERA, RID submitted a proposal for 8 wells **not just the four wells listed in the O& M document** (Phase 1 lists RID-89, RID-92, RID-95 and RID-114). What is the fate of the four other wells which were submitted to ADEQ under the MERA? RID listed in Phase 2 four additional wells (RID-100, RID-106, RID-112 and RID-113) and states, "Phase 2 well head treatment systems installation is anticipated to begin in late 2013 upon availability of project funds." (See Modified Early Response Action p.29 (October 22, 2012)) **Comment: ADEQ has indicated in the past that the MERA would not be approved based upon the "availability of funds." It would seem that RID has abandoned MERA Phase 2 and the four additional LGAC systems proposed and previously approved by ADEQ. ADEQ should document this fact in a modification of the ADEQ's conditional approval of the MERA dated February 1, 2013.**

Issue:
3.) To date, RID has not submitted the required Schedule of Implementation for the MERA as required under AACR 18-16-405 (D) (3). **Comment: ADEQ should require RID to comply with regulation.**

SPECIFIC COMMENTS:

Issue:
4.) **Appendix H** is the Health and Safety Plan (HASP) dated January 6, 2011. For some reason, RID decided not to create their own HASP under Appendix H. Instead, RID includes "BE&K/Terranext's-Site Specific Health and Safety Plan (HASP). (September 7, 1999)". This plan is not signed or stamped and according to my contacts at BE&K Terranext, they did not know about it or authorize it's use. The HASP authors are no longer at BE&K. Almost every section states the RID's HASP plan "...are similar to those in Section____ of the Terranext HASP, attached as Appendix A, and are incorporated into this HASP addendum by reference." This is unprofessional at best and not generally accepted within the industry or by ADEQ to submit someone else's HASP plan as your own. Under Appendix H page 7, they list as Key Contacts for RID Stan Ashby, Superintendent (whom I believe is now retired) and Julie Riemenschneider for ADEQ (whom I believe is working for the City of Phoenix). **Comment: RID should be required to complete their own specific HASP.**

Issue:
5.) **Appendix J** includes the "Weekly Operation and Maintenance Inspection Form." **Comment: This report and data should be incorporated into Appendix K and submitted to ADEQ as part of the proposed Appendix K Monthly Report.**

Issue:
6.) **Appendix K** is the proposed Monthly Report to ADEQ which is clearly in need of revision because it doesn't even require operational details of whether they are in treatment mode, bypass mode, modified treatment mode to facilitate LGAC change-outs and/or backwash or well shutdown due to seasonal water demand. They should report hours of operation for each treatment mode by individual well. In general, the purpose of the Monthly Report is to assume

that the RID is providing operational, maintenance and management practices to achieve water quality standards and/or failure of key systems.

Since startup, can RID document on a weekly and monthly basis the following:

1. Does ADEQ have RID's Monthly Report and weekly Operation and Maintenance Inspection Form for each of these four wells since startup?
2. Can ADEQ determine operational details of whether they are in treatment mode, bypass mode, modified treatment mode to facilitate GAC change-outs and/or backwash or well shutdown due to seasonal water demand?
3. System Operating time, downtime and maintenance activity.
4. Quantity of water treated.
5. Flow rate of each extraction well.
6. Influent and effluent TCE concentrations.
7. TCE mass removed from the groundwater during the month.
8. Performance of weekly inspections to monitor equipment performance (upset reports).
9. Maintenance activity of facility grounds, fences, gates and wells.
10. Performance of preventative maintenance on system equipment and instrumentation.
11. Clean filters, replace carbon (document carbon use) and rehabilitation of extraction wells and any monitoring wells.
12. List of current key contacts.

Comment: I suggest ADEQ should demand that RID revise the Monthly Report to track and report these metrics. How do you know if they are operating? Note: Section 4.5 Instrumentation and Controls in RID's O & M Plan indicates they have instrumentation to document these parameters.

Issue:
7.) Under Section 4.1 System Operation Upset Event Notifications, it provides that "Operator receives automated notification to alert in the event of certain control conditions described in detail in Section 4.5. The operator (Spinnaker Holdings, LLC) will notify RID and Synergy in the event of significant process control issue(s) or failure(s). As soon as the issue(s) of the event are reviewed and fully understood, Synergy will notify ADEQ by telephone if the quality of the treated water could be affected or if releases to the environment have occurred." (p. 12) **Comment: Although immediate notification of adverse control conditions are important to RID, Synergy and ADEQ, under AAC R 18-16-411(E)(4) it requires that a process for the water treatment system operator to also promptly notify "potentially affected water providers" of a key treatment system component that could affect the quality of a discharge of treated water. This may include the City of Phoenix or the Salt River Project.**

Issue:
8.) There are twenty-two (22) technical comments which are included under **Exhibit 2**. These identified issues reflect technical problems with the O& M Plan which must be addressed.

Comment: ADEQ should review and direct RID to make the 22 identified technical revisions.

In conclusion, I suggest that ADEQ adopt these suggested changes and direct RID to rewrite the captioned O & M Plan. Then, ADEQ should republish and provide Public Notice for the new O & M Plan(s) which should be significantly revised. RID should be required to create a separate O & M Plan for RID-89, RID-92, RID-95 and RID-114. Call me at (602) 744-5763 with any questions.

Sincerely,

Jerry D. Worsham II
For the Firm

JDW/pjb

Attachments: Exhibits 1 & 2
cc: Anthony E. Young, Esq. – Arizona Attorney General (w/attachments)
Laura L. Malone – ADEQ, Director Waste Programs Division (w/attachments)
Linda Furlough, Esq. – Meritor, Inc. (w/attachments)

EXHIBIT "1"

WEST VALLEY Groundwater CLEANUP COALITION

ROOSEVELT IRRIGATION DISTRICT

RID Early Response Action Technical Briefing

To The

West Van Buren Community Advisory Board

Arizona Department of Environmental Quality

December 6, 2012

✦ WELLHEAD PILOT TREATMENT SYSTEMS INITIATIVE

- ✧ RID-95 TREATMENT SYSTEM STARTED UP 2/6/2012
  - -- TECHNOLOGY/DESIGN DEMONSTRATION PERIOD --
- ✧ RID-89 TREATMENT SYSTEM STARTED UP 5/24/2012
- ✧ RID-92 TREATMENT SYSTEM STARTED UP 5/23/2012
- ✧ RID-114 TREATMENT SYSTEM STARTED UP 5/22/2012

ALL TREATMENT SYSTEMS TURNED OFF 10/31/2012 AND WILL BE RESTARTED IN THE SPRING WHEN RID WATER DEMAND INCREASES

~ 2 BILLION GALLONS OF CONTAMINATED GROUNDWATER TREATED

APPROXIMATELY 1000 POUNDS OF VOCS CAPTURED / DESTROYED

RID ERA Technical Briefing

12/6/12

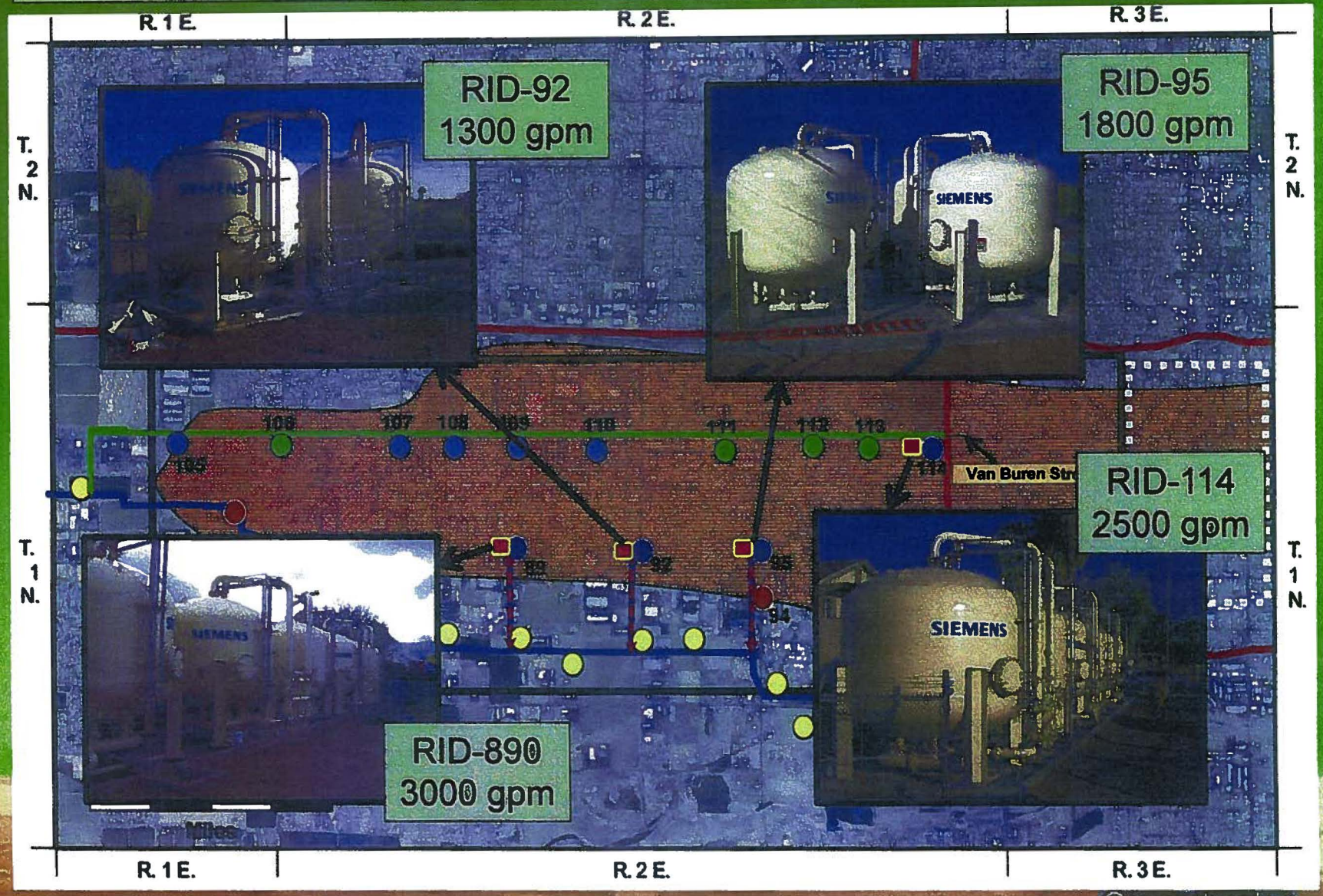

✦ TASK 4 – ENGINEERING DESIGN STUDY

... RID MUST COMPLETE AN ENGINEERING DESIGN STUDY TO DESCRIBE ALL TECHNICAL REQUIREMENTS FOR A PUMP AND TREAT REMEDIATION SYSTEM, INCLUDING AN OPERATION AND MAINTENANCE PLAN ...

- ✧ RID-95 WELLHEAD PILOT TREATMENT SYSTEMS PROPOSAL SUBMITTED TO ADEQ ON 8/18/2011, ADEQ PROVIDED "CONCURRENCE" WITH ACTIONS DESCRIBED THEREIN ON 9/2/2011
- ✧ DESIGN AND CONSTRUCTION OF THE 4 WELLHEAD TREATMENT SYSTEMS WAS SUBSTANTIALLY COMPLETED BY 12/31/2011
- ✧ THE O&M PLAN HAS BEEN MADE AVAILABLE TO ADEQ AS WELL AS THE 1-MONTH TECHNOLOGY/DESIGN DEMONSTRATION REPORT AND MONTHLY PROGRESS REPORTS

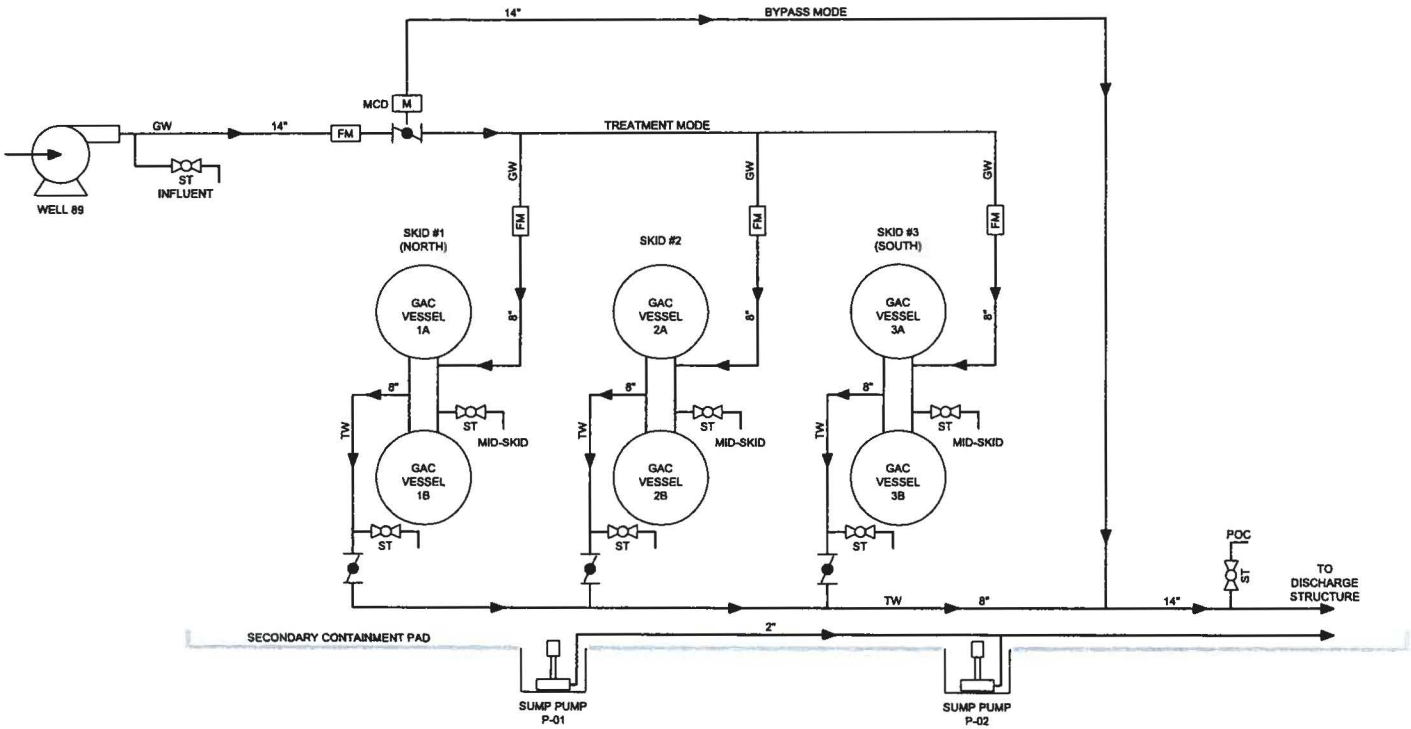

LEGEND:

	CENTRIFUGAL PUMP		MANUAL VALVE
FM	FLOW METER	ST	SAMPLE TAP
M	MOTOR-OPERATED VALVE, MODULATING	GW	GROUNDWATER
		TW	TREATED WATER
		POC	POINT OF COMPLIANCE

PROCESS FLOW DIAGRAM
RID-89 WELL HEAD TREATMENT SYSTEM

Roosevelt Irrigation District
West Van Buren Area

By: LD	Date: 10/03/13	Project No. 802.40
SYNERGY ENVIRONMENTAL, LLC — 10645 N. Tatum Blvd. Suite 200-137 Phoenix, AZ 85028 602-430-3795		Figure 2

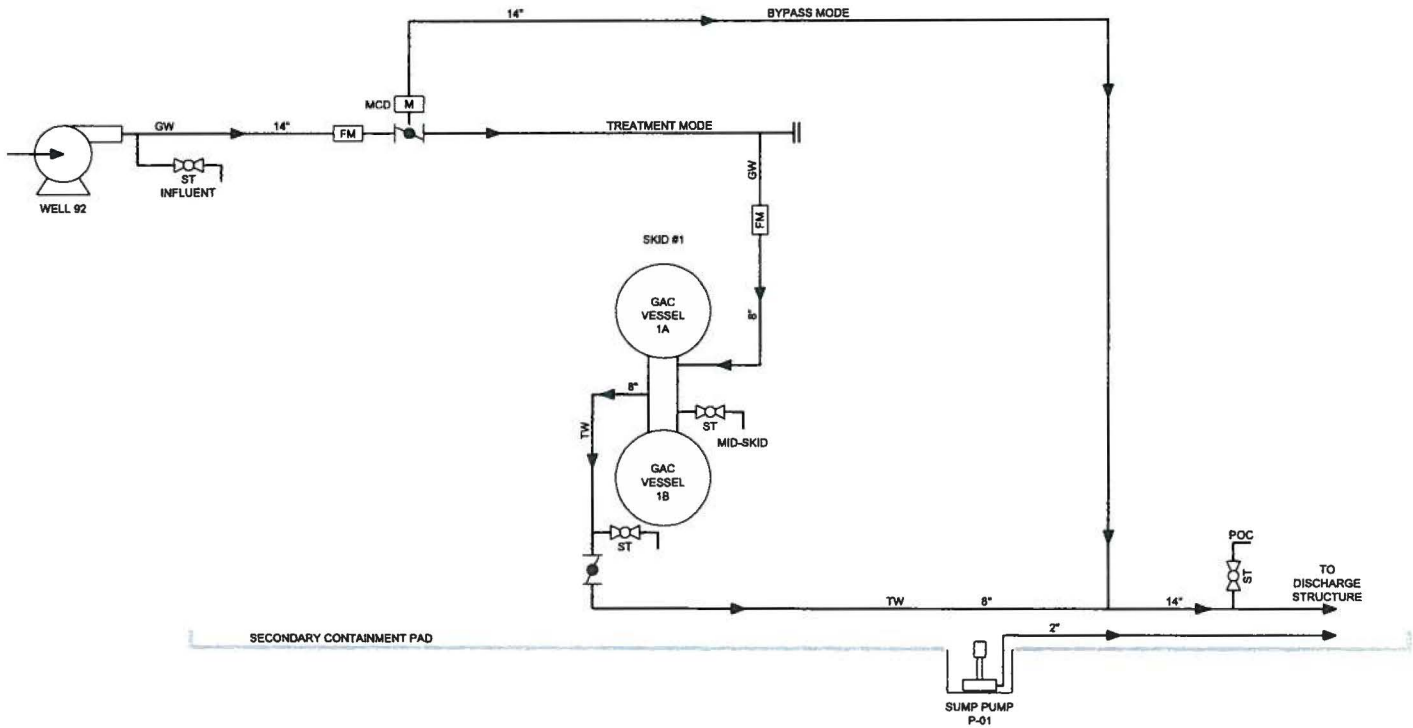

LEGEND:

	CENTRIFUGAL PUMP		MANUAL VALVE
FM	FLOW METER	ST	SAMPLE TAP
M	MOTOR-OPERATED VALVE, MODULATING	GW	GROUNDWATER
		TW	TREATED WATER
	BLIND FLANGE FOR FUTURE CONNECTION	POC	POINT OF COMPLIANCE

PROCESS FLOW DIAGRAM
RID-92 WELL HEAD TREATMENT SYSTEM

Roosevelt Irrigation District
West Van Buren Area

By: LD	Date: 10/03/13	Project No. 802.40
SYNERGY ENVIRONMENTAL, LLC 10645 N. Tatum Blvd. Suite 200-137 Phoenix, AZ 85028 602-430-2785		Figure 3

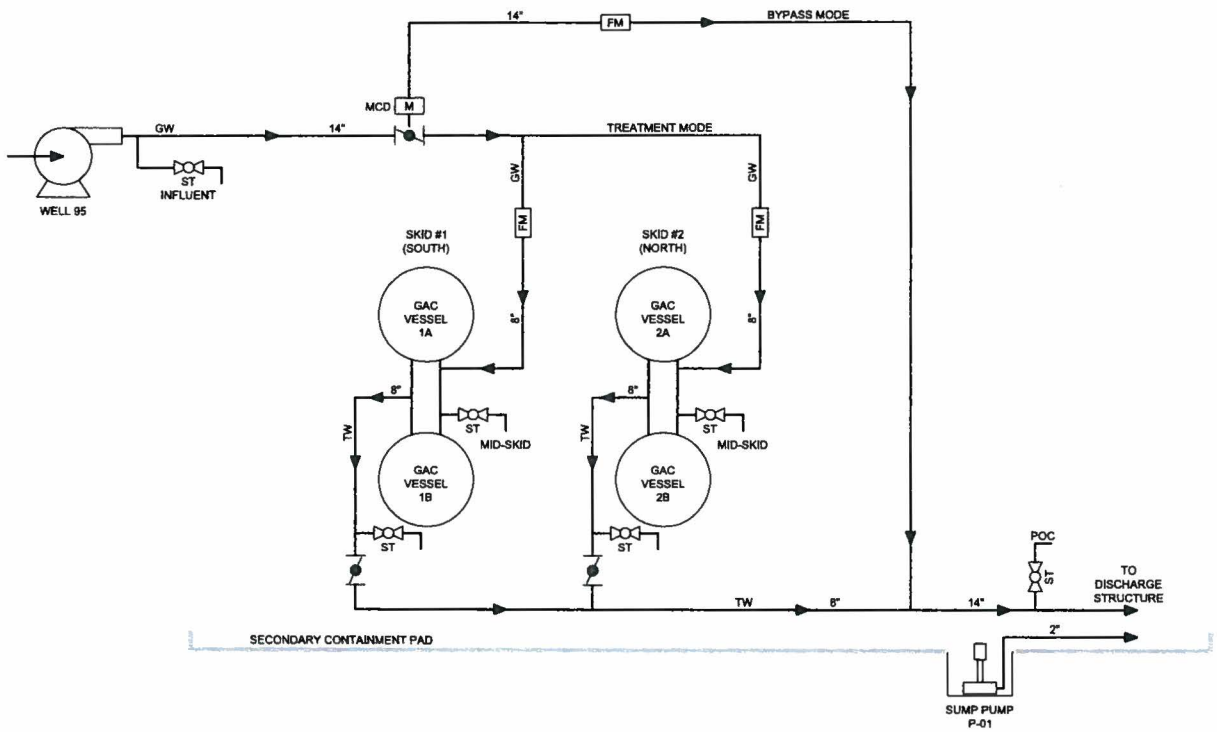

LEGEND:

	CENTRIFUGAL PUMP		MANUAL VALVE
FM	FLOW METER	ST	SAMPLE TAP
M	MOTOR-OPERATED VALVE, MODULATING	GW	GROUNDWATER
		TW	TREATED WATER
		POC	POINT OF COMPLIANCE

PROCESS FLOW DIAGRAM
RID-95 WELL HEAD TREATMENT SYSTEM

Roosevelt Irrigation District
West Van Buren Area

By: LD	Date: 10/03/13	Project No. 802.40
SYNERGY ENVIRONMENTAL, LLC — 16845 N. Tatum Blvd. Suite 208-137 Phoenix, AZ 85028 602-430-2785		Figure 4

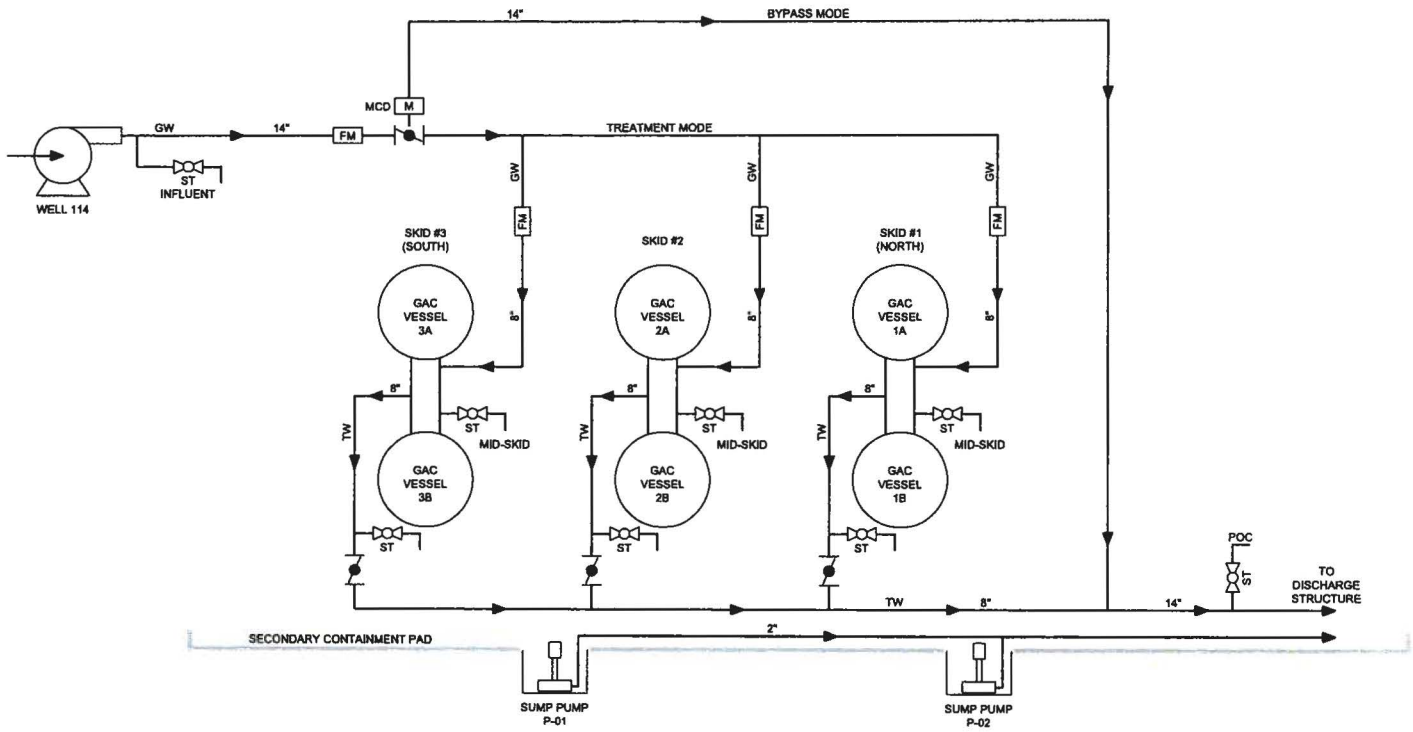

LEGEND:

	CENTRIFUGAL PUMP		MANUAL VALVE
FM	FLOW METER	ST	SAMPLE TAP
M	MOTOR-OPERATED VALVE, MODULATING	GW	GROUNDWATER
		TW	TREATED WATER
		POC	POINT OF COMPLIANCE

PROCESS FLOW DIAGRAM
RID-114 WELL HEAD TREATMENT SYSTEM

Roosevelt Irrigation District
West Van Buren Area

By: LD	Date: 10/03/13	Project No. 802.40
SYNERGY ENVIRONMENTAL, LLC — 10415 N. Tatum Blvd. Suite 200-137 Phoenix, AZ 85028 602-430-3765		Figure 5

EXHIBIT "2"

COMMENTS: OPERATION AND MAINTEANCE PLAN – RID WELLHEAD TREATMENT SYSTEMS, REVISION 3

GENERAL	COMMENT
1.	The Operation and Maintenance (O&M) Plan should be revised to include signature of Operator Acknowledgement to document that all operators working on the wellhead treatment systems have read and fully understand the requirements of the O&M Plan.
2.	The O&M Plan should be revised to detail the specific training, certification and license requirements for all operators performing work on the wellhead treatment system (e.g. Licensed Electrician, OSHA Hazardous Waste Operations and Emergency Response [HAZWOPER], National Fire Protection Association [NFPA] 70e, etc.).
3.	The O&M Plan should detail, and include copies, of all permits required to operate each wellhead treatment system.
4.	The O&M Plan should be revised to include as-built drawings for each wellhead treatment system.
SPECIFIC	**SECTION/COMMENT**
1.	**2.4 Treatment Goals** This section details the discharge water quality standards for treated water at the wellhead treatment system. This section should also detail the metrics for suspending and/or permanently deactivating treatment operations.
2.	**3.0 System Description** This section indicates that the selected granular activated carbon (GAC) systems are rated by the manufacturer with a maximum capacity of 1,100 gallons per minute (gpm); however, Appendix A Section 2.3 indicates the maximum flow rate is 1,000 gpm. In addition, the nominal flow rate for each treatment skid installed at the RID-89 and RID -92 well sites exceeds 1,100 gpm when 100 percent of the influent water is treated (no water bypasses treatment). The O&M Plan should be revised to clarify the manufacturer's recommended maximum capacity, provide the basis for exceeding the manufacturer's recommend maximum capacity and detail the safety, process, or warranty implications as a result of operating the vessels in this manner.
3.	**4.4 System Operation** The O&M Plan references a spare parts list in Appendix A. However, Appendix A does not appear to include a spare parts list. Furthermore, Appendix A is specific to the O&M of the treatment skids and is not expected to address the O&M or spare parts required for pumping equipment, instrumentation and controls equipment, security equipment, or sampling equipment. The O&M Plan should be revised to include a comprehensive spare parts list, which identifies critical spare parts necessary to achieve system uptime requirements that are required to be on-hand and non-critical spare parts with associated order contact and estimated lead times.
4.	**4.4.3 IGAC Change-Outs and Backwash** The O&M Plan indicates the backwash water will be discharged directly to the discharge receiver box. It is not clear if this practice is compliant with any discharge permit requirements or restrictions.
5.	**4.5 Instrumentation and Controls** The wellhead treatment systems instrumentation and controls (I&C) were designed and integrated by Vertech. Vertech's contact

	information should be included in 7.0 Key Contacts List in the event the I&C require troubleshooting support in the future.
6.	**4.5 Instrumentation and Controls** Figures 2 thru 5 provide general process flow information for each wellhead treatment system. The O&M Plan should be revised to include Piping and Instrumentation Diagrams (P&ID) as well or in place of the process flow diagrams.
5.	**4.5 Instrumentation and Controls** The O&M Plan provides generalized information regarding the capabilities of the Supervisory Control and Data Acquisition (SCADA) system and provides an overview of the process the system operator must follow while interacting with the Remote Terminal Unit (RTU) or Operator Interface Terminal (OIT) to operate each wellhead treatment system. The O&M Plan could be improved by including screen-shots of the RTU/OIT with the sequence the operator must follow to safety operate the well pumps and 3-way valves. In addition, the O&M Plan should detail the procedure for accessing and operating each wellhead treatment system via the web-based interface.
6.	**4.5.1 Well Pumps** It is not clear whether the OIT in the control room at ~~RDT~~ RW-95 is specific to the operation of the RID-95 wellhead treatment system or capable of controlling operations at all wellhead treatment systems.
7.	**4.5.1 Well Pumps** The O&M Plan should be revised to detail the set point for the overload condition and the steps required to reset the overload relay for the main pump motor starter in the event of an overload condition. In addition, the O&M Plan should detail the means by which the operator is notified in the event of an overload condition and the response time expectation for the operator to address and resolve the issue.
8.	**4.5.1 Well Pumps** A non-critical high pressure alarm condition will occur if the system pressure exceeds 30 pounds per square inch (psi). The O&M Plan should be revised to detail the range of normal operating pressures. In addition, the O&M Plan should detail the response action(s) to be taken by the operator in the event of a non-critical high pressure alarm condition.
9.	**4.5.1 Well Pumps** A critical high pressure alarm condition will occur if the system pressure exceeds 40 psi. The O&M Plan should be revised to detail the steps required to reset the high pressure alarm and restart the well pump in the event of a critical high pressure condition. In addition, the O&M Plan should detail the means by which the operator is notified in the event of high pressure condition and the response time expectation for the operator to address and resolve the issue.
10.	**4.5.2 Flow Meters** A non-critical low flow alarm condition will occur if the influent flow rate decreases to less than 25 percent of the nominal influent flow rate. The O&M Plan should be revised to detail the set point for each non-critical low flow alarm condition. In addition, the O&M Plan should detail the response action(s) to be taken by the operator in the event of a non-critical low flow alarm condition.
11.	4.5.3 Pressure Transmitters

	A non-critical high differential pressure alarm condition will occur if the differential pressure between a treatment system skid effluent and the system influent exceeds 25 psi. The O&M Plan should be revised to detail the response action(s) to be taken by the operator in the event of a non-critical differential pressure alarm condition. If this alarm condition occurs frequently and results in failing the operational uptime requirement, the owner/operator should consider installing a particulate filter prior to GAC treatment.
12.	**4.5.4 3-Way Valves** It is recommended that the O&M Plan be revised to include calculations supporting the selected duration to close the 3-way valve of 120 seconds to prevent a water hammer.
13.	**4.5.5 Sump Level Switches** In the event of a critical high-high water level in a containment pad sump, as a result of a breach at a treatment system skid, the 3-way valve will automatically switch the influent flow to bypass treatment and the well pump will continue pumping. The O&M Plan should detail the actions to take in the event the breach is to the bypass piping.
14.	**4.5.5 Sump Level Switches** Following a critical high-high water level alarm at a containment pad sump, the sump contents will be visually inspected to confirm that no hazardous materials are present. The O&M Plan should be revised to clarify the nature of the hazardous materials. Presumably, the materials are inspected for their ability to damage (or be a hazard to) sump pump equipment, and not for hazardous substances that may have a detrimental effect on human health and the environment.
15.	**4.5.7 Temperature Sensors** It is not clear whether the controls cabinets are equipped with cooling units. It is recommended that air conditioning units be mounted to the control cabinets, if not already, to protect the electrical components.
16.	**4.5.8 Site Security** This section provides a brief description of the security system and measures in place at each wellhead treatment site. This section should also detail the procedures and frequency for inspecting and maintaining the security system to ensure security system and measures (e.g. lighting, fencing, and cameras) are in good working condition.
17.	**4.5.9 Unplanned Shutdowns/System Operation Upset Events** The section details three examples of potential unplanned or unscheduled shutdown events. This section should also detail the critical assumptions and objectives regarding system operational uptime.
18.	**7.0 Key Contact List** The selected GAC vendor (i.e. Siemens) should be added to the list of key contacts.
19.	**Figure 1** The USEPA Motorola 52nd Street Superfund Site Operable Unit 3 west boundary extends to 7th Avenue. Figure 1 should be revised to accurately show the WVBA and OU3 boundaries. In addition, the location of the RID wells should be checked for accuracy. For example, Figure 1 locates RID-104 east of 7th Avenue; however, Figure 1 of Appendix H indicates this well is west of 7th Avenue.

20.	**Appendix A** The Siemens Operation & Maintenance Manual provided in Appendix A, according to the Title Page, is specific to Well Site 95. It is not clear if the Siemens Operation & Maintenance manual is intended for use at all wellhead treatment sites.
21.	**Appendix A, Section 3.5 Initial Backwash and Section 3.7 Backwash** According to the Siemens Operation & Maintenance Manual, the initial backwash should be performed using clean water (free of solids and organics) and use of water containing organics for subsequent backwashing is "highly discouraged". The O&M Plan should identify the source of clean water and the specific procedure for backwashing the vessels for each treatment skid at each wellhead treatment site.
22.	**Appendix G** This section includes details and specifications for the lighting system, but does not include details on other security system features. Details and specifications of other relevant features (e.g. cameras and associated owner's manuals) should be included in the event replacement equipment/parts should be procured.